XR46000

N-Channel Power MOSFET

Description

The XR46000 is a silicon N-channel enhanced power MOSFET. With low conduction loss, good switching performance and high avalanche energy, it is suitable for various power supply system, especially for AC step driving application for LED lighting.

The package type is SOT-223, which comply with the RoHS standard.

FEATURES

- Fast switching
- ESD improved capability
- Low gate charge (Typ. 7.5nC)
- Low reverse transfer capacitance (Typ. 5.0pF)

APPLICATIONS

- LED lighting applications
  - Downlight
  - High bay
  - Specialty
  - Architectural

Key Parameters

V_{DSS}	600V
I_D	1.5A
P_D (T_C = 25°C)	20W
$R_{DS,ON,typ}$	7.0Ω

The product (or products) mentioned in this data sheet are no longer being manufactured and may not be ordered (OBS)

Equivalent Circuit

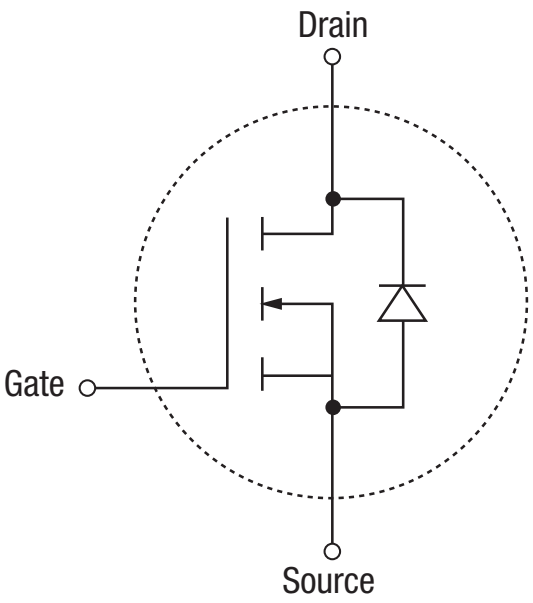

Figure 1. Equivalent Cirucit

Pin Configuration

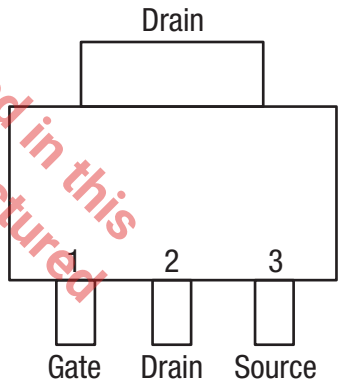

SOT-223, Top View

Absolute Maximum Ratings

Stresses beyond the limits listed below may cause permanent damage to the device. Exposure to any Absolute Maximum Rating condition for extended periods may affect device reliability and lifetime.

T_C = 25°C unless otherwise noted.

V_{DSS} drain-to-source voltage 600V

I_D continuous drain current (T_C = 25°C) 1.5A

I_D continuous drain current (T_C = 100°C) 0.85A

I_{DM} pulsed drain current 6A

V_{GS} gate-to-source voltage ..... ±30V

P_D power dissipation (T_C = 25°C) 20W

P_D derating factor above 25°C ..... 0.16W/°C

$T_{STORAGE}$ storage temperature range..... -65°C to 150°C

E_{AS} single pulse avalanche energy 80mJ

NOTE:
Unless otherwise noted, all tests are pulsed tests at the specified temperature, therefore: $T_J = T_C = T_A$.

Operating Conditions

T_J operating junction temperature ..... 150°C

T_A operating ambient temperature ..... -40°C to 85°C

The product (or products) mentioned in this data sheet are no longer being manufactured and may not be ordered (OBS)

Electrical Characteristics

T_C = 25°C unless otherwise noted.

Symbol	Parameter	Conditions	Min	Typ	Max	Units
OFF Characteristic						
BV_{DSS}	Drain to source breakdown voltage	V_{GS} = 0V, I_D = 250µA	600			V
$\Delta BV_{DSS}/\Delta T_J$	Breakdown voltage temperature coefficient	I_D = 250µA, reference 25°C		0.71		V/°C
I_{DSS}	Drain to source leakage current	V_{DS} = 600V, V_{GS} = 0V, T_A = 25°C			25	µA
		V_{DS} = 600V, V_{GS} = 0V, T_A = 125°C			250	
$I_{GSS(F)}$	Gate to source forward leakage	V_{GS} = 30V			12	µA
$I_{GSS(R)}$	Gate to source reverse leakage	V_{GS} = -28V			-12	
ON Characteristic (pulse width tp ≤ 380µs, δ ≤ 2%)						
$R_{DS(ON)}$	Drain to source on-resistance	V_{GS} = 10V, I_D = 0.75A		7.0	8.0	Ω
$V_{GS(TH)}$	Gate threshold voltage	V_{DS} = V_{GS}, I_D = 250µA	2.0		4.0	V
Dynamic Characteristic						
g_{fs}	Forward transconductance	V_{DS} = 15V, I_D = 0.75A		1.0		s
C_{iss}	Input capacitance	V_{GS} = 0V, V_{DS} = 25V, f = 1MHz		170		pF
C_{oss}	Output capacitance			27		
C_{rss}	Reverse transfer capacitance			5		
Resistive Switching Characteristic						
$t_{d(ON)}$	Turn-on delay time	I_D = 1.5A, V_{DD} = 300V, V_{GS} = 10V, R_G = 4.7Ω		8		ns
t_r	Rise time			30		
$t_{d(OFF)}$	Turn-off delay time			22		
t_f	Fall time			55		
Q_g	Total gate charge	I_D = 1.5A, V_{DD} = 480V, V_{GS} = 10V		7.5		nC
Q_{gs}	Gate to source charge			1.7		
Q_{gd}	Gate to drain “Miller” charge			4.0		
Source-Drain Diode Characteristics (pulse width tp ≤ 380us, δ ≤ 2%)						
I_S	Continuous source current (body diode)				1.5	A
I_{SM}	Maximun source current (body diode)				6.0	
V_{SD}	Diode forward voltage	I_S = 1.5A, V_{GS} =0V			1.5	V
T_{rr}	Reverse recovery time	I_D = 1.5A, T_J = 25°C, dI_F/dt = 100A/µs, V_{GS} = 0V		530		ns
Q_{rr}	Reverse recovery charge			1100		nC
I_{RRM}	Reverse recovery current			4.4		A

The product (or products) mentioned in this data sheet are no longer being manufactured and may not be ordered (OBS)

Typical Performance Characteristics

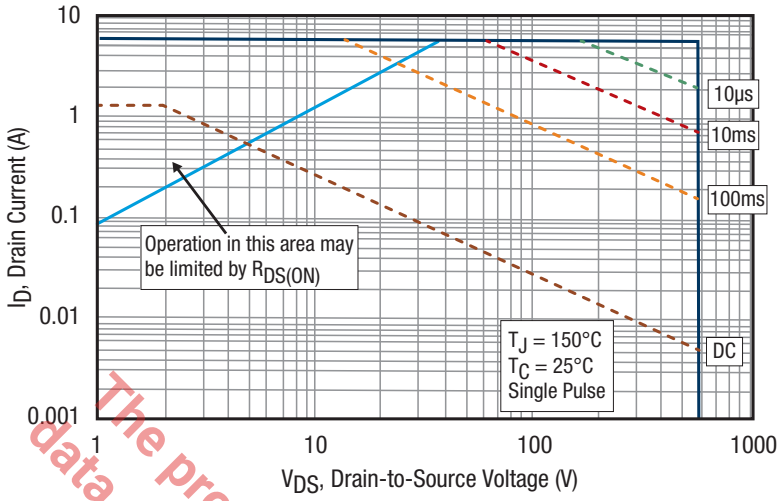

Figure 2. Safe Operating Area

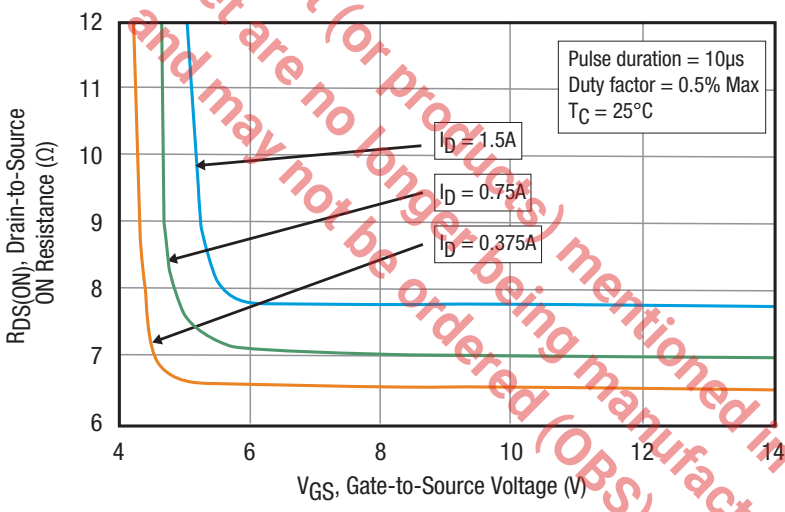

Figure 3. Typical Drain-to-Source ON Resistance vs. Gate Voltage and Drain Current

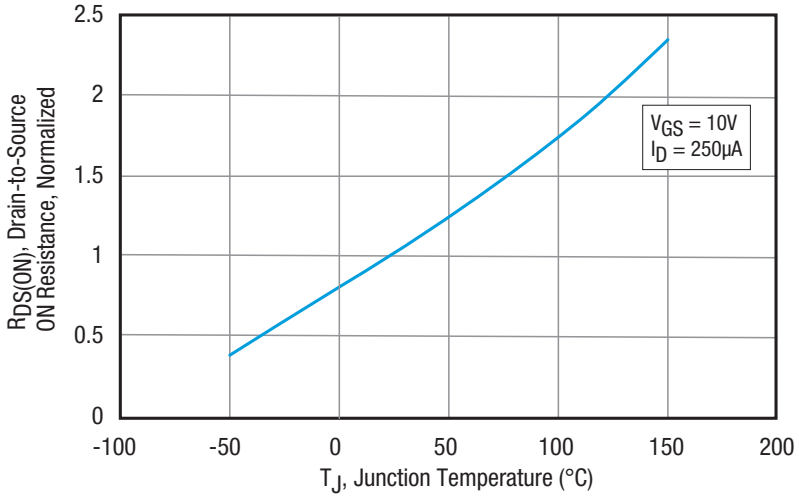

Figure 4. Typical Drain-to-Source ON Resistance vs. Junction Temperature

The product (or products) mentioned in this data sheet are no longer being manufactured and may not be ordered (OBS).

Package Description

Top View

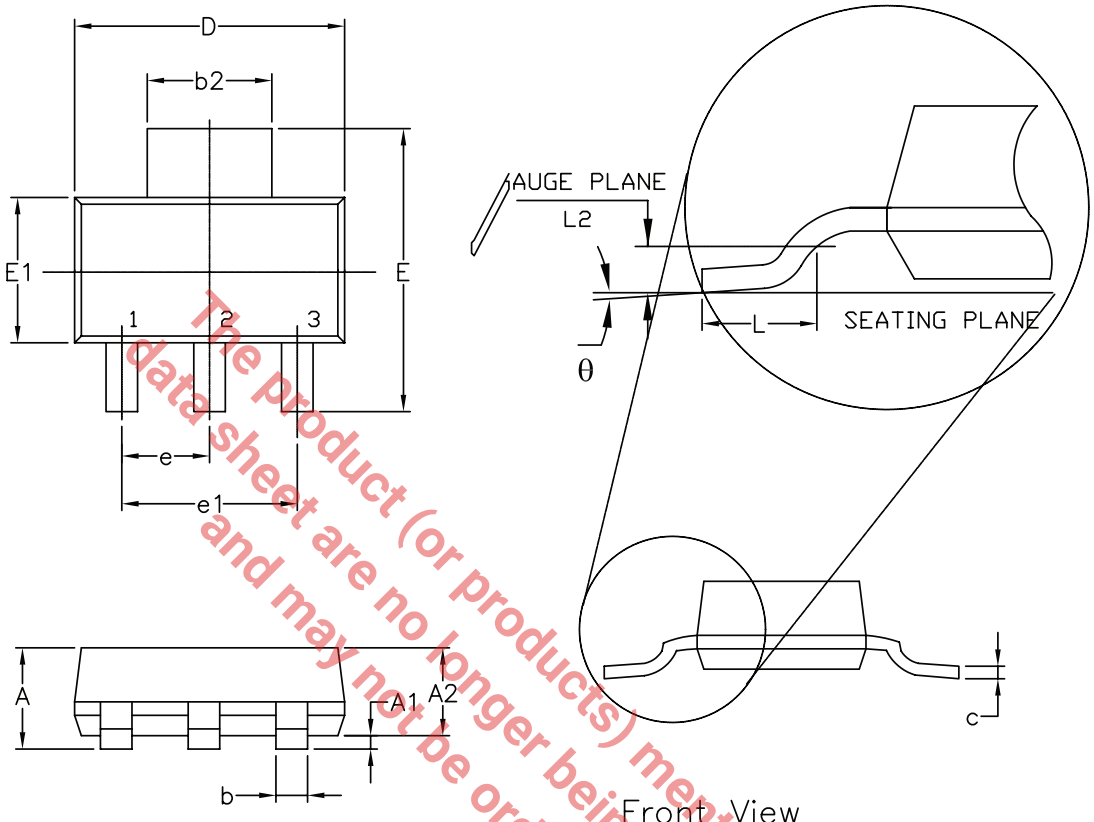

Front View

Side View

The product (or products) mentioned in this data sheet are no longer being manufactured and may not be ordered (OBS).

3 Pin SOT-223 JEDEC TO-261 Variation AA						
SYMBOLS	DIMENSIONS IN MM (Control Unit)			DIMENSIONS IN INCH (Reference Unit)		
	MIN	NOM	MAX	MIN	NOM	MAX
A	—	—	1.80	—	—	0.071
A1	0.02	—	0.10	0.001	—	0.004
A2	1.50	1.60	1.70	0.060	0.063	0.067
b	0.66	0.76	0.84	0.026	0.030	0.033
b2	2.90	3.00	3.10	0.114	0.118	0.122
c	0.23	0.30	0.35	0.010	0.012	0.014
D	6.30	6.50	6.70	0.248	0.256	0.264
E	6.70	7.00	7.30	0.264	0.276	0.287
E1	3.30	3.50	3.70	0.130	0.138	0.146
e	2.30 BSC			0.091 BSC		
e1	4.60 BSC			0.182 BSC		
L	0.75	—	—	0.030	—	—
L2	0.25 BSC			0.010 BSC		
θ	0°	—	10°	0°	—	10°
N	3			3		

Ordering Information[1]

Part Number	Operating Temperature Range	Package	Packaging Method	Lead Free[2]
XR46000ESETR	-40°C ≤ T_J ≤ 150°C	SOT-223	Tape and reel	Yes

NOTES:
1. Refer to www.maxlinear.com/XR46000 for most up-to-date Ordering Information.
2. Visit www.maxlinear.com for additional information on Environmental Rating.

Revision History

Revision	Date	Description
1A	Aug 2016	Initial release
1B	Nov 2019	Updated to MaxLinear logo. Updated Ordering Information.

The product (or products) mentioned in this data sheet are no longer being manufactured and may not be ordered (OBS)

5966 La Place Court
Suite 100
Carlsbad, CA 92008
Tel.: +1 (760) 692-0711
Fax: +1 (760) 444-8598
www.maxlinear.com

The content of this document is furnished for informational use only, is subject to change without notice, and should not be construed as a commitment by MaxLinear, Inc. MaxLinear, Inc. assumes no responsibility or liability for any errors or inaccuracies that may appear in the informational content contained in this guide. Complying with all applicable copyright laws is the responsibility of the user. Without limiting the rights under copyright, no part of this document may be reproduced into, stored in, or introduced into a retrieval system, or transmitted in any form or by any means (electronic, mechanical, photocopying, recording, or otherwise), or for any purpose, without the express written permission of MaxLinear, Inc.

Maxlinear, Inc. does not recommend the use of any of its products in life support applications where the failure or malfunction of the product can reasonably be expected to cause failure of the life support system or to significantly affect its safety or effectiveness. Products are not authorized for use in such applications unless MaxLinear, Inc. receives, in writing, assurances to its satisfaction that: (a) the risk of injury or damage has been minimized; (b) the user assumes all such risks; (c) potential liability of MaxLinear, Inc. is adequately protected under the circumstances.

MaxLinear, Inc. may have patents, patent applications, trademarks, copyrights, or other intellectual property rights covering subject matter in this document. Except as expressly provided in any written license agreement from MaxLinear, Inc., the furnishing of this document does not give you any license to these patents, trademarks, copyrights, or other intellectual property.

MaxLinear, the MaxLinear logo, and any MaxLinear trademarks, MxL, Full-Spectrum Capture, FSC, G.now, AirPHY and the MaxLinear logo are all on the products sold, are all trademarks of MaxLinear, Inc. or one of MaxLinear's subsidiaries in the U.S.A. and other countries. All rights reserved. Other company trademarks and product names appearing herein are the property of their respective owners.

© 2016 - 2019 MaxLinear, Inc. All rights reserved.

ENTEGRECİ

Bu belge www.entegreci.com üzerinden sunulmaktadır.

Elektronik komponent tedarikinde Entegreci

Entegreci, Eskişehir merkezli, Türkiye geneline satış yapan bir elektronik komponent mağazasıdır. Entegreler (IC), mikrodenetleyiciler, transistörler, diyotlar, pasif elemanlar, konnektörler, modüller ve geliştirme kartları tek adetten seri üretim adetlerine kadar satılır. Ürün sayfalarında güncel stok durumunu, fiyatı ve datasheet bağlantısını bulabilirsiniz.

Parça koduyla arama

Üretici parça numarasını yazın; stok ve fiyatı hemen görün.

www.entegreci.com

Ürün kategorileri

Entegreden kapasitöre tüm elektronik komponent kategorileri.

Kategorilere göz atın

Üreticiler

Aradığınız üreticinin ürünlerini tek sayfada inceleyin.

Üreticileri görün

Toplu alım ve teklif

Listede olmayan ya da yüksek adetli parçalar için teklif isteyin.

Teklif isteyin

www.entegreci.com | **destek@entegreci.com** | **0850 305 90 34**

Entegreci is an online electronic components store based in Türkiye. Search by manufacturer part number to see stock, prices and datasheets for integrated circuits, microcontrollers, transistors, passive components and connectors, or request a quote for parts that are not listed.

Bu sayfa Entegreci tarafından eklenmiştir. Belgenin önceki sayfaları asıl yayıncısına aittir ve içeriği değiştirilmemiştir; en güncel sürüm için belgenin yayıncısına başvurun.