PHASE SHIFT RESONANT CONTROLLER

FEATURES

- **Programmable Output Turn On Delay; Zero Delay Available**
- **Compatible with Voltage Mode or Current Mode Topologies**
- **Practical Operation at Switching Frequencies to 300 kHz**
- **10-MHz Error Amplifier**
- **Pin Programmable Undervoltage Lockout**
- **Low Startup Current – 150 μA**
- **Soft Start Control**
- **Outputs Active Low During UVLO**

DESCRIPTION

The UC3879 controls a bridge power stage by phase shifting the switching of one half-bridge with respect to the other. This allows constant frequency pulse width modulation in combination with resonant, zero-voltage switching for high efficiency performance. The UC3879 can be configured to provide control in either voltage mode or current mode operation, with overcurrent shutdown for fast fault protection.

Independently programmable time delays provide dead-time at the turn-on of each output stage, allowing time for each resonant switching interval.

BLOCK DIAGRAM

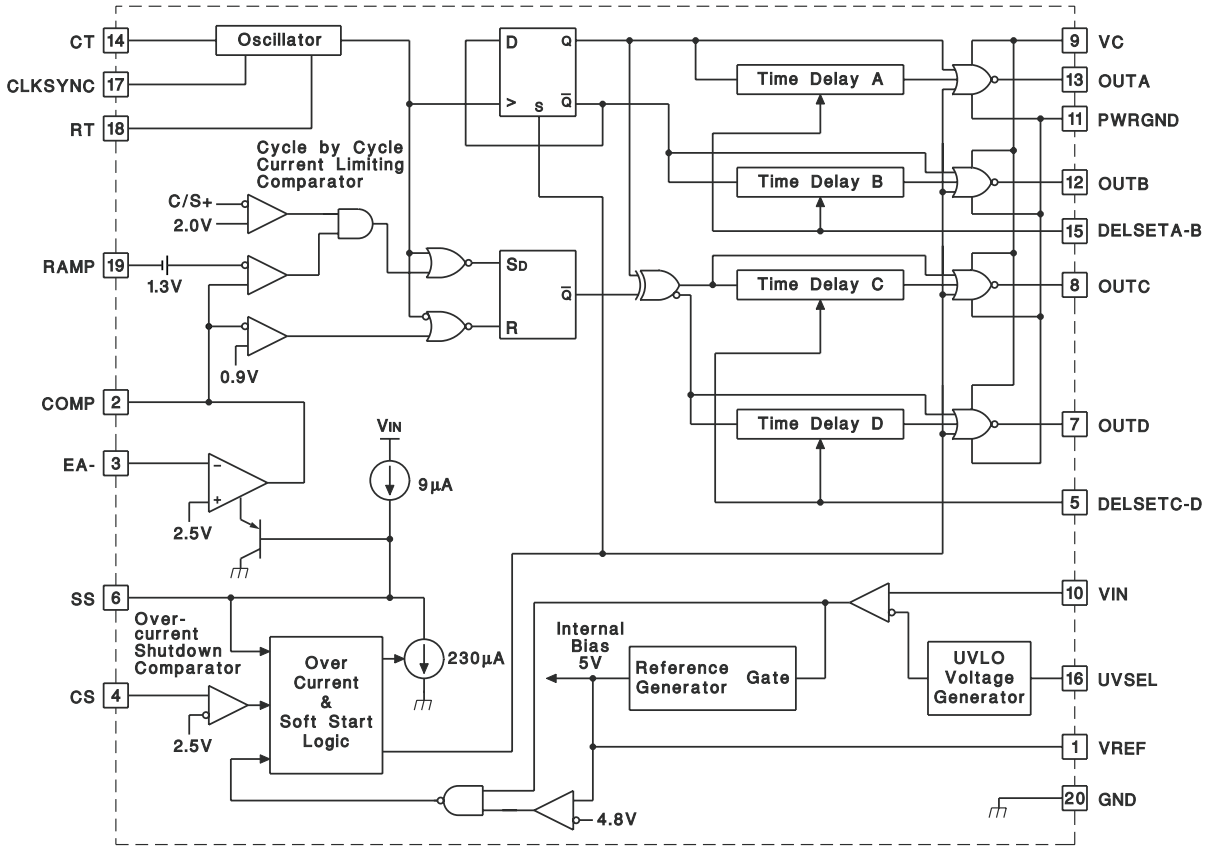

Please be aware that an important notice concerning availability, standard warranty, and use in critical applications of Texas Instruments semiconductor products and disclaimers thereto appears at the end of this data sheet.

PRODUCTION DATA information is current as of publication date. Products conform to specifications per the terms of the Texas Instruments standard warranty. Production processing does not necessarily include testing of all parameters.

Copyright © 1998–2007, Texas Instruments Incorporated

DESCRIPTION (CONTINUED)

With the oscillator capable of operating in excess of 600 kHz, overall output switching frequencies to 300 kHz are practical. In addition to the standard free running mode, with the CLKSYNC pin, the user may configure the UC3879 to accept an external clock synchronization signal. Alternatively, up to three units can be locked together with the operational frequency determined by the fastest device.

Protective features include an undervoltage lockout and overcurrent protection. Additional features include a 10-MHz error amplifier, a 5-V precision reference, and soft start. The UC3879 is available in 20 pin N, J, DW, and Q and 28 pin L packages.

ABSOLUTE MAXIMUM RATINGS(1)

PARAMETER	VALUE	UNIT
Supply voltage (VC, VIN)	20	V
Output current, source or sink, dc	20	mA
Output current, source, sink peak for 0.1 μs at max frequency of 300 kHz	100	
Analog inputs		
(Pins 1, 2, 3, 4, 5, 6, 14, 15, 17, 18, 19)	–0.3 to 5.3	V
(Pin 16)	–0.03 to VIN	
Analog outputs		
(Pins 7, 8, 12, 13)	–0.3 to V_C to 0.3	V
Storage temperature range	–65°C to 150°C	°C
Junction temperature	–55°C to 150°C	
Lead temperature (soldering, 10 sec)	300°C	

(1) Pin references are to 20-pin DIL and SOIC packages. All voltages are with respect to ground unless otherwise stated. Currents are positive into, negative out of the specified terminal.

THERMAL CHARACTERISTICS

over operating free-air temperature range (unless otherwise noted)

PACKAGE	θ_{JA}	θ_{JC}
J-20	70-85	28(1)
N-20	80(2)	35
DW-20 SOIC	45-95(2)	25
PLCC-20	43-75(2)	34
CLCC-20	N/A	5-8(2)(3)

(1) θ_{JC} data values stated were derived from MIL-STD-1835B. MIL-STD-1835B states "The baseline values shown are worst case (mean +2s) for a 60 x 60 mil microcircuit device silicon die and aplicable for devices with die sizes up to 14400 square mils. For devices die sizes greater than 14400 square mils use the following values; dual-in-line, 11°C/W; flat pacl 10°C/W; pin grid array, 10°C/W".
(2) Specified θ_{JA} (junction-to-ambient) is for devices mounted to 5-in^2 FR4 PC board with one ounce copper wire where noted. When resistance range is given, lower values are for 5-in^2 aluminum PC board. Test PWB was 0.062 in thick and typically used 0.635-mm trace widths for power packages and 1.3-mm trace widths for non-power packages with a 100 x 100 mil probe land area at the end of each trace.
(3) θ_{JC} estimated for backside of device, through the metalized thermal conduction pads.

Product Selection Guide

	TEMPERATURE RANGE	AVAILABLE PACKAGES
UCC1879	–55°C to 125°C	J, L
UCC2879	–40°C to 85°C	N, DW, Q, J, L
UCC3879	0°C to 70°C	N, DW, Q

DIL-20, SOIC-2
J OR N PACKAGE, DW PACKAGE
(TOP VIEW)

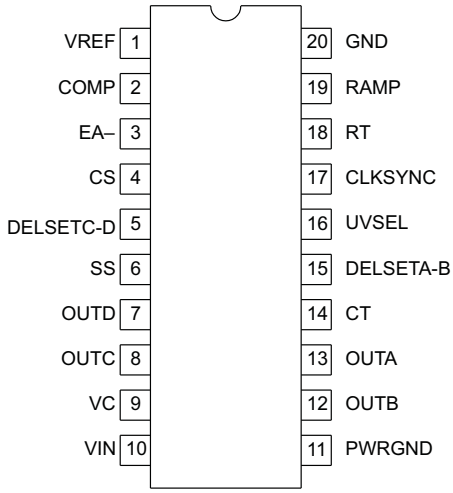

CLCC-28
L PACKAGE
(TOP VIEW)

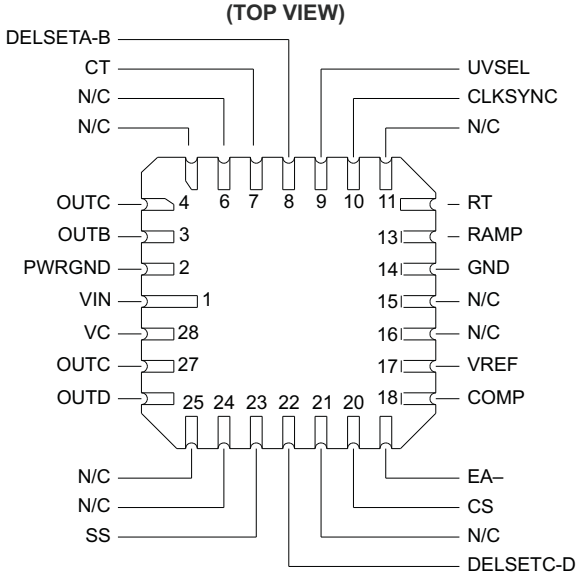

PLCC-20
Q PACKAGE
(TOP VIEW)

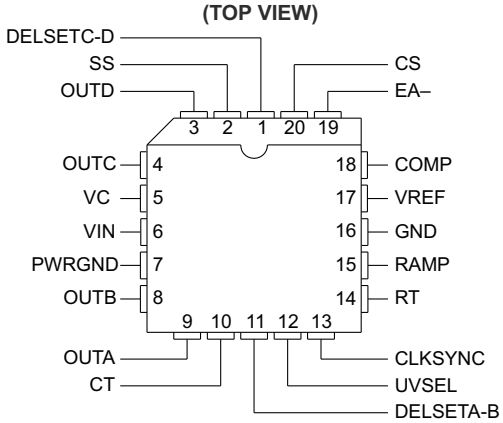

ELECTRICAL CHARACTERISTICS

Unless specified; VC = VIN = V_{UVSEL} = 12 V, CT = 470 pF, RT = 9.53k, $R_{DELSETA-B}$ = $R_{DELSEC-D}$ = 4.8k, $C_{DELSETA-B}$ = $C_{DELSETC-D}$ = 0.01 µF, T_A = T_J.

PARAMETER	TEST CONDITIONS	MIN	TYP	MAX	UNIT
Undervoltage Lockout					
Start threshold	V_{UVSEL} = VIN	9	10.75	12.5	V
	V_{UVSEL} = Open	12.5	15.25	16.5	
UVLO hysteresis	V_{UVSEL} = VIN	1.15	1.75	2.15	
	V_{UVSEL} = Open	5.2	6	7.4	
Input bias, UVSEL pin	V_{UVSEL}= VIN = 8 V		30		µA
Supply Current					
I_{VIN} startup	VIN = V_{UVSEL} = 8 V, VC = 18 V, $I_{DELSETA-B}$ = $I_{DELSETC-D}$ = 0		150	600	µA
I_{VC} startup	VIN = V_{UVSEL} = 8 V, VC = 18 V, $I_{DELSETA-B}$ = $I_{DELSETC-D}$ = 0		10	100	
I_{VIN} operating	UC3879, UC2879		23	35	mA
	UC1879		23	36	
I_{VC} operating			4	8	
Voltage Reference					
Output voltage	T_J = 25°C	4.92	5	5.08	V
Line regulation	11 V < VIN < 18 V		1	10	mV
Load regulation	I_{VREF} = –10 mA		5	20	
Total variation	Line, Load, Temperature	4.875		5.125	V
Short circuit current	VREF = 0 V, T_J = 25°C		–60	–15	mA
Error Amplifier					
Error amplifier input voltage		2.4	2.5	2.6	V
Input bias current			0.6	3	µA
AVOL	1 V < VCOMP < 4 V	60	90		dB
PSRR	11 V < VIN < 18 V	85	100		
Output sink current	V_{COMP} = 1 V	1	2.5		mA
Output source current	V_{COMP} = 4 V		–1.3	–0.5	
Output voltage high	I_{COMP} = –0.5 mA	4	4.7	5	V
Output voltage low	I_{COMP} = 1 mA	0	0.5	1	
Slew rate	T_A = 25°C	6	11		V/µs

ELECTRICAL CHARACTERISTICS (continued)

Unless specified; VC = VIN = V_{UVSEL} = 12 V, CT = 470 pF, RT = 9.53k, $R_{DELSETA-B}$ = $R_{DELSEC-D}$ = 4.8k, $C_{DELSETA-B}$ = $C_{DELSETC-D}$ = 0.01 µF, T_A = T_J.

PARAMETER	TEST CONDITIONS	MIN	TYP	MAX	UNIT
PWM Comparator					
RAMP offset voltage	T_J = 25°C(1)	1.1	1.25	1.4	V
PWM phase shift, $T_{DELSETA-B}$, $T_{DELSETC-D}$ = 0(2)	V_{COMP}> $V_{RAMPpeak}$+ $V_{RAMPoffset}$	98%	99.7%	102%	
	V_{COMP} < Zero Phase Shift Voltage	0%	0.3%	2%	
Output skew, $T_{DELSETA-B}$, $T_{DELSETC-D}$ = 0(2)	V_{COMP}> $V_{RAMPpeak}$ + $V_{RAMPoffset}$		10		ns
	V_{COMP} < Zero Phase Shift Voltage		10		
Ramp to output delay, $T_{DELSETA-B}$ = 0, $T_{DELSETC-D}$ = 0	UC3879, UC2879		115	250	
	UC1879		115	300	
Oscillator					
Initial accuracy	T_A = 25°C	180	200	220	kHz
Voltage stability	11 V < VIN < 18 V		1	2	%
Total variation	Line, Temperature	160	200	240	kHz
CLKSYNC threshold		2.3	2.5	2.7	V
Clock out high		2.8	4		
Clock out low		0.5	1	1.5	
Clock out pulse width			400	600	ns
Ramp valley voltage			0.2	0.4	V
Ramp peak voltage		2.8	2.9	3.2	
Current Limit					
Input bias	V_{CS} = 3 V		2	10	µA
Threshold voltage		2.35	2.5	2.65	V
Delay to OUTA, B, C, D			160	300	ns
Cycle-by-Cycle Current Limit					
Input bias	V_{CS} = 2.2 V		2	10	µA
Threshold voltage		1.85	2	2.15	V
Delay to output zero phase			110	300	ns

(1) Ramp offset voltage has a temperature coefficient of about –4 mV/°C.

(2) Phase shift percentage (0% = 0 , 100% = 180) is defined as $\theta = \frac{200}{T}\phi\%$ where is the phase shift, and and T are defined in Figure 1. At 0% phase shift, is the output skew.

ELECTRICAL CHARACTERISTICS (continued)

Unless specified; VC = VIN = V_{UVSEL} = 12 V, CT = 470 pF, RT = 9.53k, $R_{DELSETA-B}$ = $R_{DELSEC-D}$ = 4.8k, $C_{DELSETA-B}$ = $C_{DELSETC-D}$ = 0.01 µF, T_A = T_J.

PARAMETER	TEST CONDITIONS	MIN	TYP	MAX	UNIT
Soft Start/Reset Delay					
Charge current	V_{SS} = 0.5 V	–20	–9	–3	µA
Discharge current	V_{SS} = 1 V	120	230		µA
Restart threshold		4.3	4.7		V
Discharge level			300		mV
Output Drivers					
Output Low level	I_{OUT} = 10 mA		0.3	0.4	V
Output High level	I_{OUT} = –10 mA, Referenced to VC		2.2	3	V
Delay Set (3)					
Delay time (4)	$R_{DELSETA-B}$ = $R_{DELSETC-D}$ = 4.8k	250	370	520	ns
Delay time (4)	$R_{DELSETA-B}$ = $R_{DELSETC-D}$ = 1.9k	100	155	220	ns
Zero delay (5)	$V_{DELSETA-B}$ = $V_{DELSETC-D}$ = 5 V		5		ns

(3) Delay time can be programmed via resistors from the delay set pins to ground.

$$\text{Delay Time} = \left(0.89 \bullet 10^{-10} \bullet R_{DELAY}\right) \text{sec}$$

The recommended range for R_{DELAY} is 1.9 kΩ to 10 kΩ.

(4) Delay time is defined as:

$$\text{delay} = T \bullet \left(\frac{1}{2} - \text{duty cycle}\right)$$

where T is defined in Figure 1.

(5) The zero phase shift voltage is the voltage measured at COMP which forces zero phase shift. This condition corresponds to zero effective output power. Zero phase shift voltage has a temperature coefficient of about –2 mV/°C.

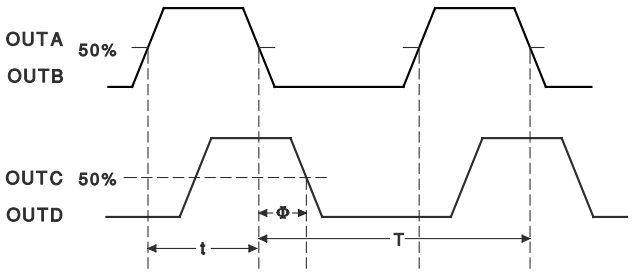

$$\text{DutyCycle} = \frac{t}{T}$$

$$\text{Period} = T$$

$$T_{DHL}(\text{A to C}) = T_{DHL}(\text{B to D}) =$$

Figure 1. Phase Shift, Output Skew and Delay Time Definitions

PIN DESCRIPTIONS

CLKSYNC (Bi-directional Clock and Synchronization): Used as an output, CLKSYNC provides a clock signal. As an input, this pin provides a synchronization point. Multiple UC3879s, each with their own local oscillator frequency, may be connected together by the CLKSYNC pin, and they will synchronize to the fastest oscillator. This pin may also be used to synchronize the UC3879 to an external clock, provided the frequency of the external signal is higher than the frequency of the local oscillator. CLKSYNC is internally connected to an emitter follower pull-up and a current source pull-down (300 μA typical). Therefore, an external resistor to GND can be used to improve the CLKSYNC pin's ability to drive capacitive loads.

COMP (Error Amplifier Output): This pin is the output of the gain stage for overall feedback control. Error amplifier output voltage levels below 0.9 V forces zero phase shift. Since the error amplifier has a relatively low current drive capability, the output may be overridden by driving it with a sufficiently low impedance source.

CT (Oscillator Frequency Set): After choosing RT to set the required upper end of the linear duty cycle range, the timing capacitor (CT) value is calculated to set the oscillator frequency as follows:

$$CT = \frac{Dlin}{1.08 \bullet RT \bullet f}$$

Connect the timing capacitor directly between CT and GND. Use a high quality ceramic capacitor with low ESL and ESR for best results. A minimum CT value of 200 pF insures good accuracy and less susceptibility to circuit layout parasitics. The oscillator and PWM are designed to provide practical operation to 600 kHz.

CS (Current Sense): This pin is the non-inverting input to the two current fault comparators whose references are set internally to fixed values of 2 V and 2.5 V. When the voltage at this pin exceeds 2 V, and the error amplifier output voltage exceeds the voltage on the ramp input, the phase shift limiting overcurrent comparator will limit the phase shifting on a cycle-by-cycle basis. When the voltage at this pin exceeds 2.5 V, the current fault latch is set, the outputs are forced OFF, and a soft start cycle is initiated. If a constant voltage above 2.5 V is applied to this pin the outputs are disabled and held low. When CS is brought below 2.5 V, the outputs will begin switching at 0 degrees phase shift before the SS pin begins to rise. This condition will not prematurely deliver power to the load.

DELSETA-B, DELSETC-D (Output Delay Control): The user programmed currents from these pins to GND set the turn on delay for the corresponding output pair. This delay is introduced between the turn off of one switch and the turn on of another in the same leg of the bridge to allow resonant switching to take place. Separate delays are provided for the two half-bridges to accommodate differences in the resonant capacitor charging currents.

EA– (Error Amplifier Inverting Input): This is normally connected to the voltage divider resistors which sense the power supply output voltage level. The loop compensation components are connected between this pin and COMP.

GND (Signal Ground): All voltages are measured with respect to GND. The timing capacitor on CT, and bypass capacitors on VREF and VIN should be connected directly to the ground plane near GND.

OUTA – OUTD (Outputs A-D): The outputs are 100-mA totem pole output drivers optimized to drive FET driver devices. The outputs operate as pairs with a nominal 50% duty cycle. The A-B pair is intended to drive one half-bridge in the external power stage and is synchronized to the clock waveform. The C-D pair drives the other half-bridge with switching phase shifted with respect to the A-B outputs.

PWRGND (Power Ground): VC should be bypassed with a ceramic capacitor from VC to the section of the ground plane that is connected to PWRGND. Any required bulk reservoir capacitor should be connected in parallel. PWRGND and GND should be connected at a single point near the chip to optimize noise rejection and minimize DC voltage drops.

RAMP (Voltage Ramp): This pin is the input to the PWM comparator. Connect it to CT for voltage mode control. For current mode control, connect RAMP to CS and also to the output of the current sense transformer circuit. Slope compensation can be achieved by injecting a portion of the ramp voltage from CT to RAMP.

PIN DESCRIPTIONS (continued)

RT (Clock/Sync Duty Cycle Set Pin): The UC3879 oscillator produces a sawtooth waveform. The rising edge is generated by connecting a resistor from RT to GND and a capacitor from CT to GND (see CT pin description). During the rising edge, the modulator has linear control of the duty cycle. The duty cycle jumps to 100% when the voltage on COMP exceeds the oscillator peak voltage. Selection of RT should be done first, based on the required upper end of the linear duty cycle range (D_{lin}) as follows:

$$RT = \frac{2.5}{10\,mA \bullet (1 - Dlin)}$$

Recommended values for RT range from 2.5 kΩ to 100 kΩ.

SS: Connect a capacitor between this pin and GND to set the soft start time. The voltage at SS will remain near zero volts as long as VIN is below the UVLO threshold. Soft start will be pulled up to about 4.8 V by an internal 9-μA current source when VIN and VREF become valid (assuming a non-fault condition). In the event of a current fault (CS voltage exceeding 2.5 V), soft start will be pulled to GND and then ramp to 4.8 V. If a fault occurs during the soft start cycle, the outputs will be immediately disabled and soft start must fully charge prior to resetting the fault latch. For paralleled controllers, the soft start pins may be paralleled to a single capacitor, but the charge currents will be additive.

UVSEL: Connecting this pin to VIN sets a turn on voltage of 10.75 V with 1.5 V of UVLO hysteresis. Leaving the pin open-circuited programs a turn on voltage of 15.25 V with 6 V of hysteresis.

VC (Output Switch Supply Voltage): This pin supplies power to the output drivers and their associated bias circuitry. The difference between the output high drive and VC is typically 2.1 V. This supply should be bypassed directly to PWRGND with a low ESR/ESL capacitor.

VIN (Primary Chip Supply Voltage): This pin supplies power to the logic and analog circuitry on the integrated circuit that is not directly associated with driving the output stages. Connect VIN to a stable source above 12 V for normal operation. To ensure proper functionality, the UC3879 is inactive until VIN exceeds the upper undervoltage lockout threshold. This pin should be bypassed directly to GND with a low ESR/ESL capacitor.

NOTE:

When VIN exceeds the UVLO threshold the supply current (I_{IN}) jumps from about 100 A to greater than 20 mA. If the UC3879 is not connected to a well bypassed supply, it may immediately enter the UVLO state again. Therefore, sufficient bypass capacity must be added to ensure reliable startup.

VREF: This pin provides an accurate 5 V voltage reference. It is internally short circuit current limited. VREF is disabled while VIN is below the UVLO threshold. The circuit is also disabled until VREF reaches approximately 4.75 V. For best results bypass VREF with a 0.1 μF, low ESR/ESL capacitor.

ADDITIONAL INFORMATION

Please refer to the following Unitrode publications for additional information. The following three topics are available in the Applications Handbook.

1. Application Note U-154, *The New UC3879 Phase- Shifted PWM Controller Simplifies the Design of Zero Voltage Transition Full-Bridge Converters*, by Laszlo Balogh.
2. Application Note U-136, *Phase Shifted, Zero Voltage Transition Design Considerations and the UC3875 PWM Controller*, by Bill Andreycak.
3. Design Note DN-63, *The Current-Doubler Rectifier: An Alternative Rectification Technique for Push-Pull and Bridge Converters,* by Laszlo Balogh.

PACKAGING INFORMATION

Orderable part number	Status (1)	Material type (2)	Package | Pins	Package qty | Carrier	RoHS (3)	Lead finish/ Ball material (4)	MSL rating/ Peak reflow (5)	Op temp (°C)	Part marking (6)
UC2879DW	NRND	Production	SOIC (DW) | 20	25 | TUBE	Yes	NIPDAU	Level-2-260C-1 YEAR	-40 to 85	UC2879DW
UC2879DW.A	NRND	Production	SOIC (DW) | 20	25 | TUBE	Yes	NIPDAU	Level-2-260C-1 YEAR	-40 to 85	UC2879DW
UC2879DWG4	NRND	Production	SOIC (DW) | 20	25 | TUBE	Yes	NIPDAU	Level-2-260C-1 YEAR	-40 to 85	UC2879DW
UC2879DWTR	NRND	Production	SOIC (DW) | 20	2000 | LARGE T&R	Yes	NIPDAU	Level-2-260C-1 YEAR	-40 to 85	UC2879DW
UC2879DWTR.A	NRND	Production	SOIC (DW) | 20	2000 | LARGE T&R	Yes	NIPDAU	Level-2-260C-1 YEAR	-40 to 85	UC2879DW
UC2879DWTRG4	NRND	Production	SOIC (DW) | 20	2000 | LARGE T&R	Yes	NIPDAU	Level-2-260C-1 YEAR	-40 to 85	UC2879DW
UC2879N	NRND	Production	PDIP (N) | 20	20 | TUBE	Yes	NIPDAU	N/A for Pkg Type	-40 to 85	UC2879N
UC2879N.A	NRND	Production	PDIP (N) | 20	20 | TUBE	Yes	NIPDAU	N/A for Pkg Type	-40 to 85	UC2879N
UC2879NG4	NRND	Production	PDIP (N) | 20	20 | TUBE	Yes	NIPDAU	N/A for Pkg Type	-40 to 85	UC2879N
UC3879DW	NRND	Production	SOIC (DW) | 20	25 | TUBE	Yes	NIPDAU	Level-2-260C-1 YEAR	0 to 70	UC3879DW
UC3879DW.A	NRND	Production	SOIC (DW) | 20	25 | TUBE	Yes	NIPDAU	Level-2-260C-1 YEAR	0 to 70	UC3879DW
UC3879DWG4	NRND	Production	SOIC (DW) | 20	25 | TUBE	Yes	NIPDAU	Level-2-260C-1 YEAR	0 to 70	UC3879DW
UC3879DWTR	NRND	Production	SOIC (DW) | 20	2000 | LARGE T&R	Yes	NIPDAU	Level-2-260C-1 YEAR	0 to 70	UC3879DW
UC3879DWTR.A	NRND	Production	SOIC (DW) | 20	2000 | LARGE T&R	Yes	NIPDAU	Level-2-260C-1 YEAR	0 to 70	UC3879DW
UC3879N	NRND	Production	PDIP (N) | 20	20 | TUBE	Yes	NIPDAU	N/A for Pkg Type	0 to 70	UC3879N
UC3879N.A	NRND	Production	PDIP (N) | 20	20 | TUBE	Yes	NIPDAU	N/A for Pkg Type	0 to 70	UC3879N

(1) **Status:** For more details on status, see our product life cycle.

(2) **Material type:** When designated, preproduction parts are prototypes/experimental devices, and are not yet approved or released for full production. Testing and final process, including without limitation quality assurance, reliability performance testing, and/or process qualification, may not yet be complete, and this item is subject to further changes or possible discontinuation. If available for ordering, purchases will be subject to an additional waiver at checkout, and are intended for early internal evaluation purposes only. These items are sold without warranties of any kind.

(3) **RoHS values:** Yes, No, RoHS Exempt. See the TI RoHS Statement for additional information and value definition.

(4) **Lead finish/Ball material:** Parts may have multiple material finish options. Finish options are separated by a vertical ruled line. Lead finish/Ball material values may wrap to two lines if the finish value exceeds the maximum column width.

(5) **MSL rating/Peak reflow:** The moisture sensitivity level ratings and peak solder (reflow) temperatures. In the event that a part has multiple moisture sensitivity ratings, only the lowest level per JEDEC standards is shown. Refer to the shipping label for the actual reflow temperature that will be used to mount the part to the printed circuit board.

(6) **Part marking:** There may be an additional marking, which relates to the logo, the lot trace code information, or the environmental category of the part.

Multiple part markings will be inside parentheses. Only one part marking contained in parentheses and separated by a "~" will appear on a part. If a line is indented then it is a continuation of the previous line and the two combined represent the entire part marking for that device.

Important Information and Disclaimer: The information provided on this page represents TI's knowledge and belief as of the date that it is provided. TI bases its knowledge and belief on information provided by third parties, and makes no representation or warranty as to the accuracy of such information. Efforts are underway to better integrate information from third parties. TI has taken and continues to take reasonable steps to provide representative and accurate information but may not have conducted destructive testing or chemical analysis on incoming materials and chemicals. TI and TI suppliers consider certain information to be proprietary, and thus CAS numbers and other limited information may not be available for release.

In no event shall TI's liability arising out of such information exceed the total purchase price of the TI part(s) at issue in this document sold by TI to Customer on an annual basis.

TAPE AND REEL INFORMATION

REEL DIMENSIONS

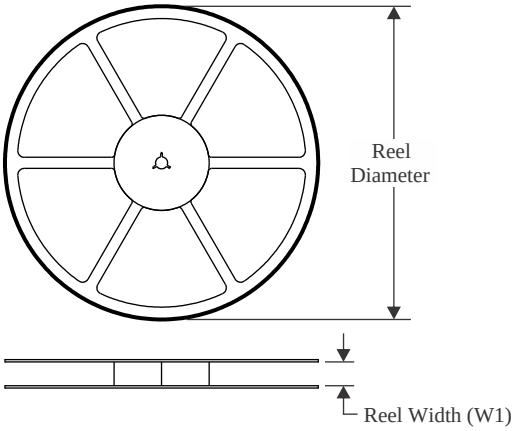

TAPE DIMENSIONS

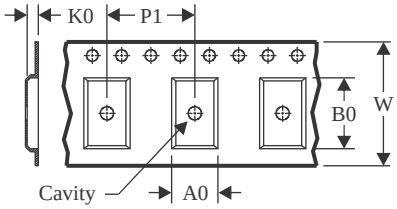

A0	Dimension designed to accommodate the component width
B0	Dimension designed to accommodate the component length
K0	Dimension designed to accommodate the component thickness
W	Overall width of the carrier tape
P1	Pitch between successive cavity centers

QUADRANT ASSIGNMENTS FOR PIN 1 ORIENTATION IN TAPE

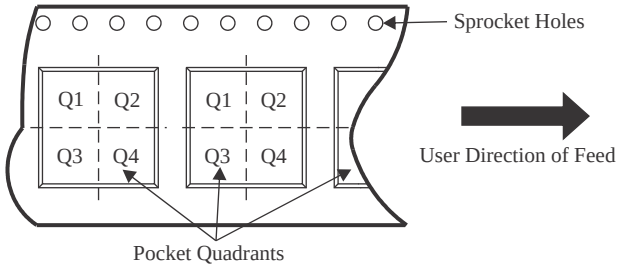

*All dimensions are nominal

Device	Package Type	Package Drawing	Pins	SPQ	Reel Diameter (mm)	Reel Width W1 (mm)	A0 (mm)	B0 (mm)	K0 (mm)	P1 (mm)	W (mm)	Pin1 Quadrant
UC2879DWTR	SOIC	DW	20	2000	330.0	24.4	10.8	13.3	2.7	12.0	24.0	Q1
UC3879DWTR	SOIC	DW	20	2000	330.0	24.4	10.8	13.3	2.7	12.0	24.0	Q1

TAPE AND REEL BOX DIMENSIONS

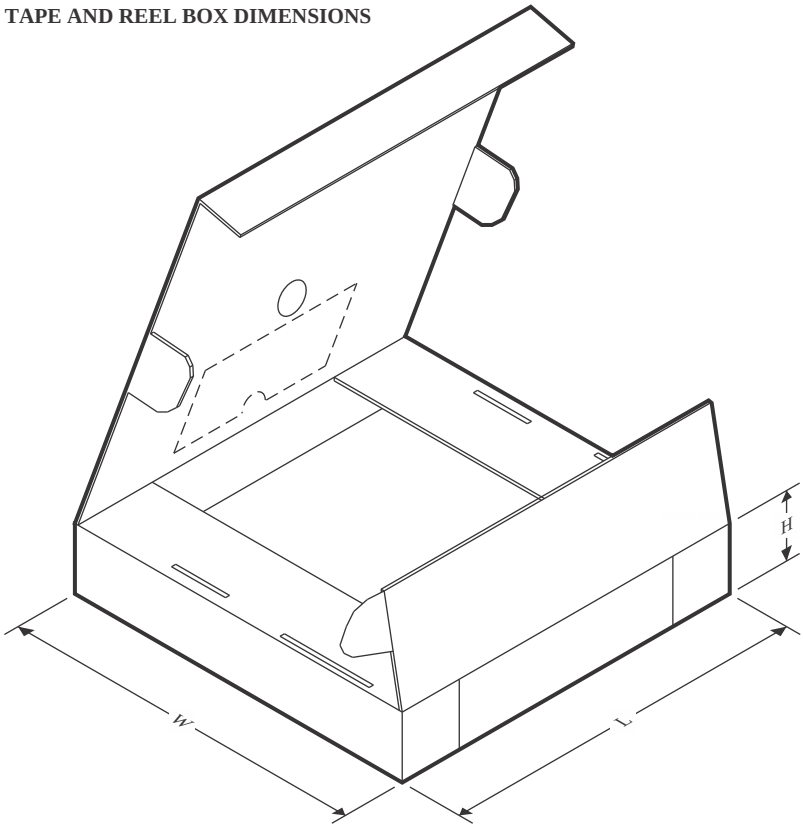

*All dimensions are nominal

Device	Package Type	Package Drawing	Pins	SPQ	Length (mm)	Width (mm)	Height (mm)
UC2879DWTR	SOIC	DW	20	2000	356.0	356.0	45.0
UC3879DWTR	SOIC	DW	20	2000	356.0	356.0	45.0

TUBE

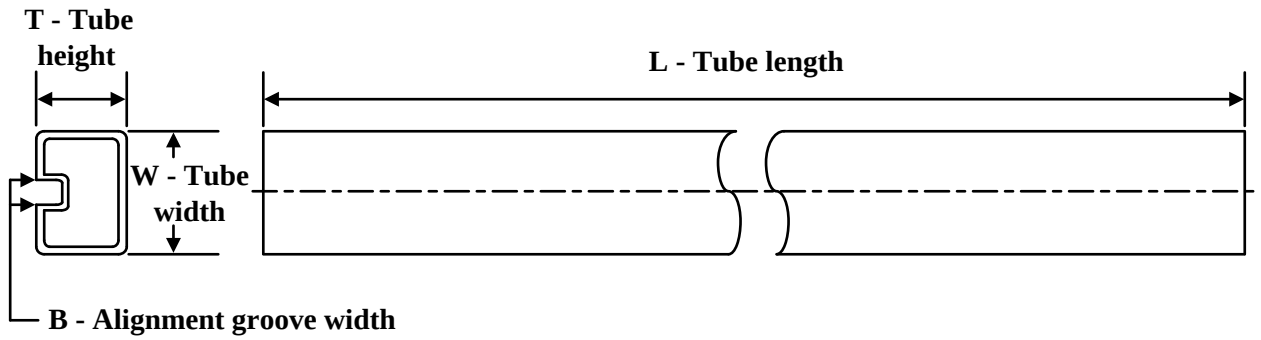

*All dimensions are nominal

Device	Package Name	Package Type	Pins	SPQ	L (mm)	W (mm)	T (µm)	B (mm)
UC2879DW	DW	SOIC	20	25	507	12.83	5080	6.6
UC2879DW.A	DW	SOIC	20	25	507	12.83	5080	6.6
UC2879DWG4	DW	SOIC	20	25	507	12.83	5080	6.6
UC2879N	N	PDIP	20	20	506	13.97	11230	4.32
UC2879N.A	N	PDIP	20	20	506	13.97	11230	4.32
UC2879NG4	N	PDIP	20	20	506	13.97	11230	4.32
UC3879DW	DW	SOIC	20	25	507	12.83	5080	6.6
UC3879DW.A	DW	SOIC	20	25	507	12.83	5080	6.6
UC3879DWG4	DW	SOIC	20	25	507	12.83	5080	6.6
UC3879N	N	PDIP	20	20	506	13.97	11230	4.32
UC3879N.A	N	PDIP	20	20	506	13.97	11230	4.32

N (R–PDIP–T**)

PLASTIC DUAL–IN–LINE PACKAGE

16 PINS SHOWN

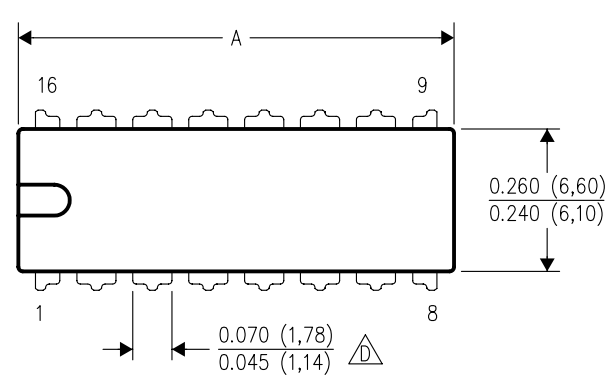

DIM \ PINS **	14	16	18	20
A MAX	0.775 (19,69)	0.775 (19,69)	0.920 (23,37)	1.060 (26,92)
A MIN	0.745 (18,92)	0.745 (18,92)	0.850 (21,59)	0.940 (23,88)
MS–001 VARIATION (C)	AA	BB	AC	AD

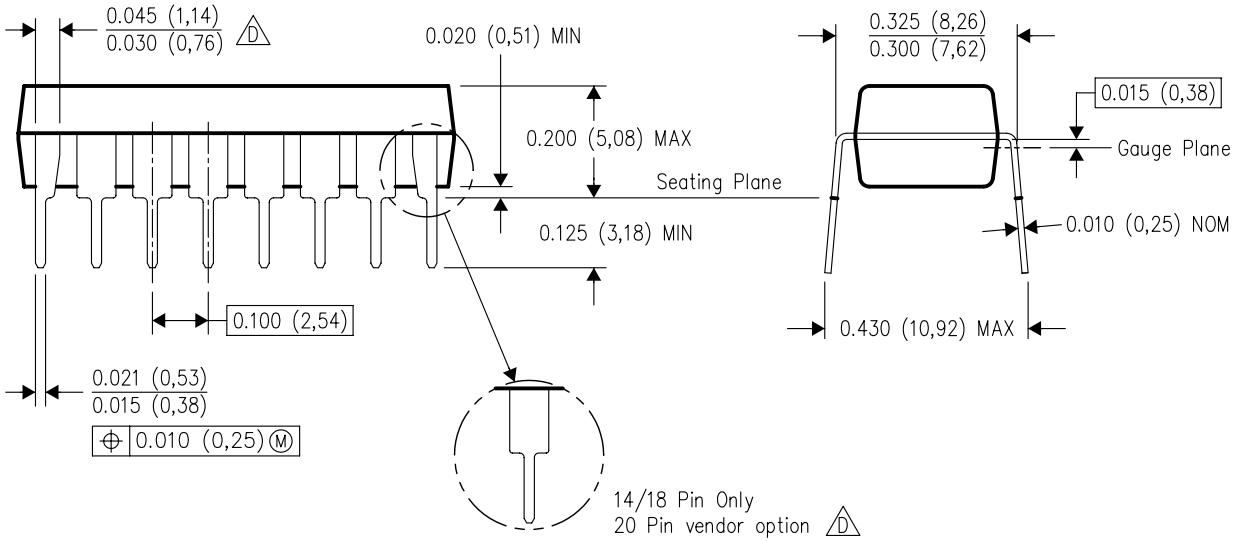

4040049/E 12/2002

NOTES:
A. All linear dimensions are in inches (millimeters).
B. This drawing is subject to change without notice.
C. Falls within JEDEC MS–001, except 18 and 20 pin minimum body length (Dim A).
D. The 20 pin end lead shoulder width is a vendor option, either half or full width.

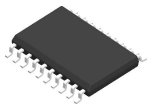

PACKAGE OUTLINE

DW0020A

SOIC - 2.65 mm max height

SOIC

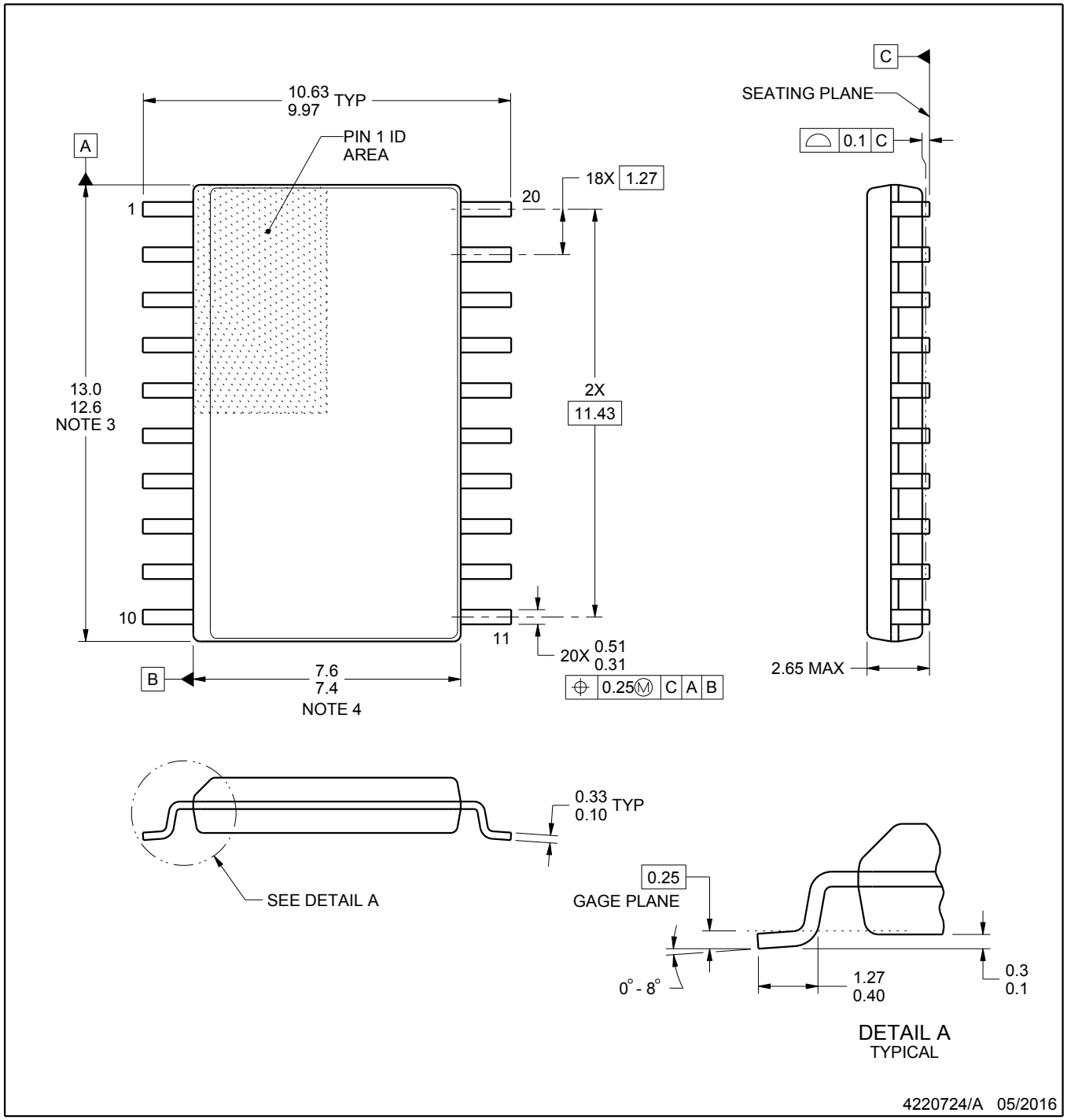

NOTES:

1. All linear dimensions are in millimeters. Dimensions in parenthesis are for reference only. Dimensioning and tolerancing per ASME Y14.5M.
2. This drawing is subject to change without notice.
3. This dimension does not include mold flash, protrusions, or gate burrs. Mold flash, protrusions, or gate burrs shall not exceed 0.15 mm per side.
4. This dimension does not include interlead flash. Interlead flash shall not exceed 0.43 mm per side.
5. Reference JEDEC registration MS-013.

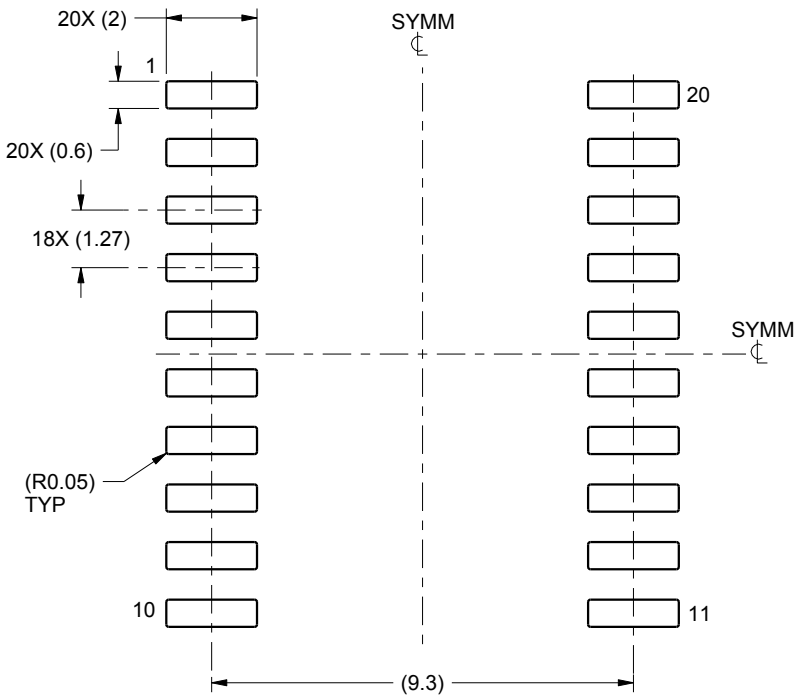

LAND PATTERN EXAMPLE
SCALE:6X

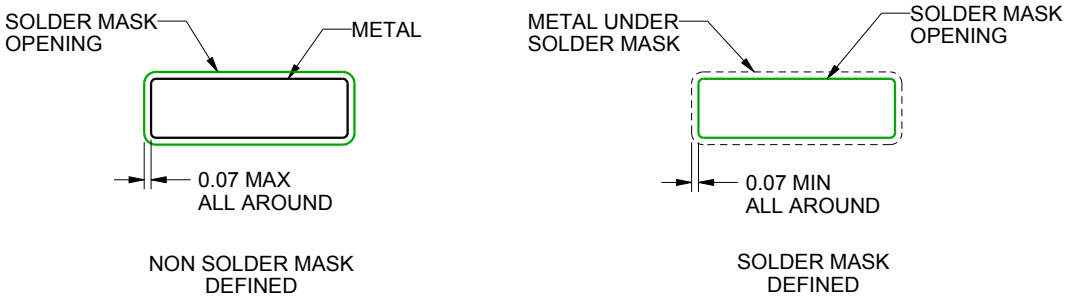

SOLDER MASK DETAILS

4220724/A 05/2016

NOTES: (continued)

6. Publication IPC-7351 may have alternate designs.
7. Solder mask tolerances between and around signal pads can vary based on board fabrication site.

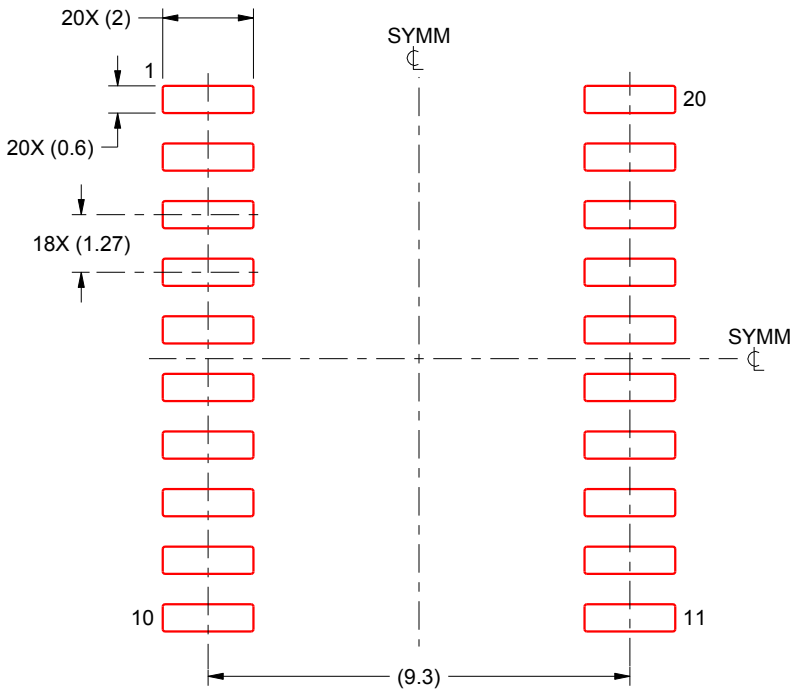

SOLDER PASTE EXAMPLE
BASED ON 0.125 mm THICK STENCIL
SCALE:6X

4220724/A 05/2016

NOTES: (continued)

8. Laser cutting apertures with trapezoidal walls and rounded corners may offer better paste release. IPC-7525 may have alternate design recommendations.
9. Board assembly site may have different recommendations for stencil design.

IMPORTANT NOTICE AND DISCLAIMER

TI PROVIDES TECHNICAL AND RELIABILITY DATA (INCLUDING DATASHEETS), DESIGN RESOURCES (INCLUDING REFERENCE DESIGNS), APPLICATION OR OTHER DESIGN ADVICE, WEB TOOLS, SAFETY INFORMATION, AND OTHER RESOURCES “AS IS” AND WITH ALL FAULTS, AND DISCLAIMS ALL WARRANTIES, EXPRESS AND IMPLIED, INCLUDING WITHOUT LIMITATION ANY IMPLIED WARRANTIES OF MERCHANTABILITY, FITNESS FOR A PARTICULAR PURPOSE OR NON-INFRINGEMENT OF THIRD PARTY INTELLECTUAL PROPERTY RIGHTS.

These resources are intended for skilled developers designing with TI products. You are solely responsible for (1) selecting the appropriate TI products for your application, (2) designing, validating and testing your application, and (3) ensuring your application meets applicable standards, and any other safety, security, regulatory or other requirements.

These resources are subject to change without notice. TI grants you permission to use these resources only for development of an application that uses the TI products described in the resource. Other reproduction and display of these resources is prohibited. No license is granted to any other TI intellectual property right or to any third party intellectual property right. TI disclaims responsibility for, and you fully indemnify TI and its representatives against any claims, damages, costs, losses, and liabilities arising out of your use of these resources.

TI’s products are provided subject to TI’s Terms of Sale, TI’s General Quality Guidelines, or other applicable terms available either on ti.com or provided in conjunction with such TI products. TI’s provision of these resources does not expand or otherwise alter TI’s applicable warranties or warranty disclaimers for TI products. Unless TI explicitly designates a product as custom or customer-specified, TI products are standard, catalog, general purpose devices.

TI objects to and rejects any additional or different terms you may propose.

Copyright © 2026, Texas Instruments Incorporated

Last updated 10/2025

ENTEGRECİ

Bu belge www.entegreci.com üzerinden sunulmaktadır.

Elektronik komponent tedarikinde Entegreci

Entegreci, Eskişehir merkezli, Türkiye geneline satış yapan bir elektronik komponent mağazasıdır. Entegreler (IC), mikrodenetleyiciler, transistörler, diyotlar, pasif elemanlar, konnektörler, modüller ve geliştirme kartları tek adetten seri üretim adetlerine kadar satılır. Ürün sayfalarında güncel stok durumunu, fiyatı ve datasheet bağlantısını bulabilirsiniz.

Parça koduyla arama

Üretici parça numarasını yazın; stok ve fiyatı hemen görün.

www.entegreci.com

Ürün kategorileri

Entegreden kapasitöre tüm elektronik komponent kategorileri.

Kategorilere göz atın

Üreticiler

Aradığınız üreticinin ürünlerini tek sayfada inceleyin.

Üreticileri görün

Toplu alım ve teklif

Listede olmayan ya da yüksek adetli parçalar için teklif isteyin.

Teklif isteyin

www.entegreci.com | **destek@entegreci.com** | **0850 305 90 34**

Entegreci is an online electronic components store based in Türkiye. Search by manufacturer part number to see stock, prices and datasheets for integrated circuits, microcontrollers, transistors, passive components and connectors, or request a quote for parts that are not listed.

Bu sayfa Entegreci tarafından eklenmiştir. Belgenin önceki sayfaları asıl yayıncısına aittir ve içeriği değiştirilmemiştir; en güncel sürüm için belgenin yayıncısına başvurun.