TPS2661x: 50-V, Universal 4–20 mA, ±20-mA Current Loop Protector With Input and Output Miswiring Protection

1 Features

- ±50-V operating voltage, ±55-V absolute maximum
- Integrated fixed bipolar 32-mA current limit
- Allows 2x current limit at start-up
- 50% space savings compared to a typical discrete protection circuit
- Low R-on: 7.5-Ω typical
- Low I_Q (< 100 nA) – current drawn from loop when powered from external supply
- Protection against miswiring conditions on IN and OUT
- Protection during signal line surge IEC61000-4-5 (with external TVS)
- Criteria-A EFT (IEC61000-4-4) immunity (with external TVS)
- Supports loop testing without supply (TPS26610 only)
- HART compliant
- Enable control
- $\overline{\text{SGOOD}}$ for system health monitoring
- Thermal shutdown

2 Applications

- Factory automation and control – PLCs - analog input and output module
- Motor drives control
- HART inputs
- HVAC controllers
- UART IO protection
- Thermal controller

3 Description

The TPS2661x is a compact, feature-rich, fully integrated current loop protector suitable for analog inputs, analog outputs, sensor transmitters, HART inputs, and UART IO protection. The device provides universal input protection for ±20 mA, 0 mA to 20 mA, and 4 mA–20 mA. Low R_{ON} values of 7.5 Ω minimizes drop in the current loop, thereby extending operating range and supporting operation even with lower voltage power supplies. The device can withstand and protect the loads from positive and negative supply voltages up to ±50 V. The MODE pin allows flexibility to enable 2x current limit through the device to enable proper start-up of two wire transmitters. Device is capable of operating from an external bipolar supply as low as ± 2.25 V to ±20 V. The device can also be powered from unipolar supplies as low as 3 V to 30 V. The TPS26610 and TPS26613 feature loop power mode to facilitate loop testing in un-powered state without ±Vs supplies.

The device also protects the system from output side miswiring in analog outputs and sensor transmitters by turning off the current path. The internal robust protection control blocks along with the 50-V rating of the TPS2661x help to protect against surge (IEC61000-4-5) and EFT (IEC61000-4-4) transients for signal lines. The device greatly reduces system footprint by its 2.9-mm × 1.6-mm 8-pin SOT-23 package.

Device Information(1)

PART NUMBER	PACKAGE	BODY SIZE (NOM)
TPS26610	SOT-23 (8)	2.9 mm × 1.6 mm
TPS26611		
TPS26612		
TPS26613		
TPS26614		

(1) For all available packages, see the orderable addendum at the end of the data sheet.

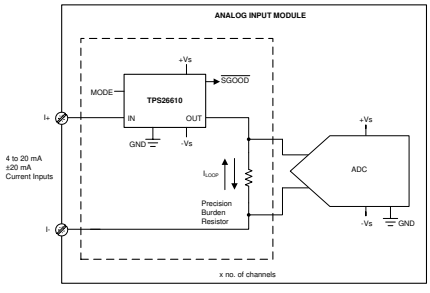

Typical Circuit Schematic

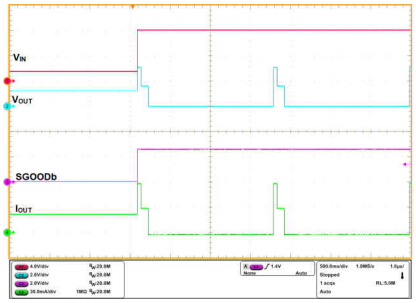

Miswiring Protection on Input From Field Supply

Table of Contents

1 Features....1
2 Applications....1
3 Description....1
4 Revision History....2
5 Device Comparison Table....3
6 Pin Configuration and Functions....3
7 Specifications....4
7.1 Absolute Maximum Ratings....4
7.2 ESD Ratings....4
7.3 Recommended Operating Conditions....4
7.4 Thermal Information....4
7.5 Electrical Characteristics....5
7.6 Timing Requirements....7
7.7 Typical Characteristics....9
8 Detailed Description....13
8.1 Overview....13
8.2 Functional Block Diagram....13
8.3 Feature Description....15
8.4 Device Functional Modes....22
9 Application and Implementation....26
9.1 Application Information....26
9.2 Typical Application: Analog Input Protection for Current Inputs with TPS26610....26
9.3 Typical Application: Analog Input Protection for Multiplexed Current and Voltage Inputs with TPS26611....29
9.4 System Examples....31
10 Power Supply Recommendations....35
11 Layout....36
11.1 Layout Guidelines....36
11.2 Layout Example....36
12 Device and Documentation Support....37
12.1 Receiving Notification of Documentation Updates....37
12.2 Support Resources....37
12.3 Trademarks....37
12.4 Electrostatic Discharge Caution....37
12.5 Glossary....37
13 Mechanical, Packaging, and Orderable Information....37

4 Revision History

NOTE: Page numbers for previous revisions may differ from page numbers in the current version.

Changes from Revision B (May 2021) to Revision C (December 2021)	Page
• Added TPS26613 and TPS26614 to the data sheet	1

Changes from Revision A (March 2021) to Revision B (May 2021)	Page
• Removed preview note from TPS26611 and TPS26612 in the *Device Information* table	1

Copyright © 2021 Texas Instruments Incorporated

5 Device Comparison Table

PART NUMBER	EN PIN	LOOP TESTING WITHOUT ±Vs SUPPLIES (LOOP POWER MODE)	EXTENDED OVERLOAD DURATION FOR FIRST OVERLOAD EVENT	LATCH-OFF or AUTO-RETRY WITH INPUT < –Vs	APPLICATION
TPS26610	No	Yes	No	Latch-off	Current Inputs. See *Typical Application: Analog Input Protection for Current Inputs with TPS26610*.
TPS26611	Yes	No	No	Latch-off	Multiplexed voltage and current inputs. Analog outputs. See *Typical Application: Analog Input Protection for Multiplexed Current and Voltage Inputs with TPS26611*.
TPS26612	Yes	No	Yes. Overload expiry time is increased up to 5 s (t_{AR_dis}).	Latch-off	Power supply protection for transmitters and Analog outputs. See *Power Supply Protection of 2-Wire Transmitter with TPS26612*.
TPS26613	No	Yes	No	Auto-retry	Current inputs
TPS26614	Yes	No	No	Auto-retry	Multiplexed voltage and current inputs. Analog outputs

6 Pin Configuration and Functions

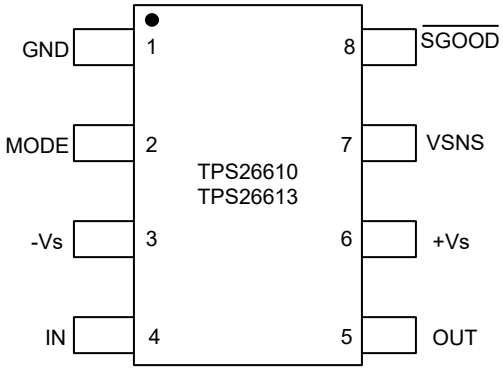

Figure 6-1. TPS26610 and TPS26613 DDF Package 8-Pin SOT-23 (Top View)

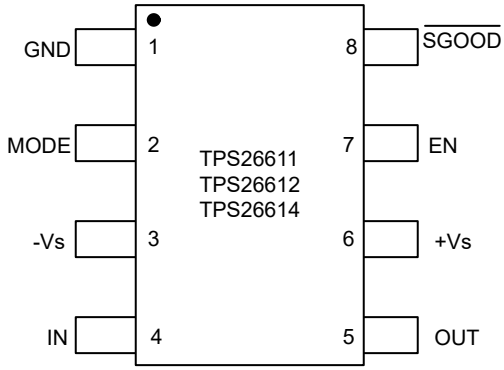

Figure 6-2. TPS26611, TPS26612, and TPS26614 DDF Package 8-Pin SOT-23 (Top View)

Table 6-1. Pin Functions

PIN		TYPE	DESCRIPTION
NAME	NO.		
GND	1	—	Reference ground for all internal voltages. Connect to GND of the ±Vs supply.
MODE	2	I	MODE selection pin for overload response. Sets current limit to I_{OL}, 2 × I_{OL}, or 2 × I_{OL} with extended I_{OL} expiry time. See the *Device Functional Modes* for details.
–Vs	3	P	Negative supply for dual supply configurations. Connect to GND when used in a single supply configuration.
IN	4	P	Signal/power input
OUT	5	P	Signal/power output
+Vs	6	P	Positive supply for powering the device
EN	7	I	*For the TPS26611, TPS26612, and TPS26614:* Enable control. Pull EN low to turn off the device. EN has internal an pullup and it can be left floating to enable the device.
VSNS		I	*For the TPS26610 and TPS26613:* Supply sensing input for transition to loop power mode. If not used, this pin can be left open or floating.
$\overline{\text{SGOOD}}$	8	O	Signal good indicator pin. Whenever the device is within normal operating condition, $\overline{\text{SGOOD}}$ shows low indicating signal is good to read. This pin can also be used to drive an external LED to give a visual indication about the state of system.

Copyright © 2021 Texas Instruments Incorporated

7 Specifications

7.1 Absolute Maximum Ratings

over operating free-air temperature range (unless otherwise noted)(1)

		MIN	MAX	UNIT
IN, OUT, IN-OUT		–55	55	V
$\overline{SGOOD}$, EN,MODE, VSNS		–0.3	5.5	V
+Vs		-0.3	32	V
-Vs		–22	0.3	V
I_{MODE}, $I_{\overline{SGOOD}}$, I_{EN}	Source Current	Internally Limited		
$I_{\overline{EN}}$	Sink Current	Internally Limited		
$I_{\overline{SGOOD}}$			200	µA
T_J	Operating Junction temperature	–40	150	°C
	Transient Junction temperature	–65	$T_{(TSD)}$	
T_{stg}	Storage temperature	–65	150	

(1) Stresses beyond those listed under *Absolute Maximum Rating* may cause permanent damage to the device. These are stress ratings only, which do not imply functional operation of the device at these or any other conditions beyond those indicated under *Recommended Operating Condition*. Exposure to absolute-maximum-rated conditions for extended periods may affect device reliability.

7.2 ESD Ratings

			VALUE	UNIT
$V_{(ESD)}$	Electrostatic discharge	Human body model (HBM), per ANSI/ESDA/JEDEC JS-001, all pins(1)	±2000	V
		Charged device model (CDM), per ANSI/ESDA/JEDEC JS-002, all pins(2)	±750	

(1) JEDEC document JEP155 states that 500-V HBM allows safe manufacturing with a standard ESD control process.
(2) JEDEC document JEP157 states that 250-V CDM allows safe manufacturing with a standard ESD control process.

7.3 Recommended Operating Conditions

over operating free-air temperature range (unless otherwise noted)

		MIN	NOM	MAX	UNIT
IN,OUT	Voltage	–50		50	V
+Vs,	Supply Voltage	0		30	
-Vs		–20		0	V
EN, $\overline{SGOOD}$, VSNS	Voltage	0		5	V
MODE		0		3	V
T_J	Operating Junction temperature	–40		125	°C

7.4 Thermal Information

THERMAL METRIC(1)		TPS2661 DDF (SOT-23-THN) 8 PINS	UNIT
$R_{\theta JA}$	Junction-to-ambient thermal resistance	117.8	°C/W
$R_{\theta JC(top)}$	Junction-to-case (top) thermal resistance	57.6	°C/W
$R_{\theta JB}$	Junction-to-board thermal resistance	40.2	°C/W
Ψ_{JT}	Junction-to-top characterization parameter	2.2	°C/W

Copyright © 2021 Texas Instruments Incorporated

7.4 Thermal Information (continued)

THERMAL METRIC[1]		TPS2661 DDF (SOT-23-THN) 8 PINS	UNIT
Ψ_{JB}	Junction-to-board characterization parameter	40	°C/W

(1) For more information about traditional and new thermal metrics, see the Semiconductor and IC Package Thermal Metrics application report.

7.5 Electrical Characteristics

–40° C ≤ T_A = T_J ≤ +125° C, 2.25 V < +Vs < 30 V, -20 V < -Vs < 0 V, MODE = GND, $\overline{SGOOD}$ = Open, EN = 3.3 V (All voltages referenced to GND, (unless otherwise noted))

PARAMETER		TEST CONDITIONS	MIN	TYP	MAX	UNIT
SIGNAL INPUT (IN)						
$V_{(IN)}$	IN Signal Voltage		–50		50	V
I_Q	Sum of Leakage Cureent from IN and OUT pins to GND in normal operation	(–Vs) < V_{IN} , V_{OUT} < (+Vs – 0.35 V)	–0.1		0.1	µA
		(+Vs – 0.35 V) < V_{IN}, V_{OUT} < +Vs			1	uA
I_{QFLT}	Sum of leakage current from IN and OUT pins to -Vs pin during fault as percentage of loop current	V_{IN} > +Vs, Current Limit Operation			20	%
$I_{(OL)}$	Bipolar current limit	$V_{(IN)}$-$V_{(OUT)}$ = ±1 V, -Vs connected to negative supply	±25	±32	±40	mA
	Unipolar Current limit	$V_{(IN)}$–$V_{(OUT)}$ = +1 V, -Vs connected to GND	25	32	40	mA
	Unipolar current limit with V_{IN} <-V_S	$V_{(IN)}$ = –24-V $V_{(OUT)}$ = –19 V, –Vs = –20 V. TPS26613/14 Only	–40	–32	–25	mA
$I_{(OL_Pulse)}$	Transient Pulse Over Current Limit	$V_{(IN)}$–$V_{(OUT)}$ = +1.5 V, MODE = Floating	50	60	72	mA
$I_{(FASTRIP)}$	Fast-trip current limit	MODE = GND	±65		±165	mA
		MODE = Floating or 180 kΩ to GND	±140		±275	mA
$I_{Off\text{-}Lkg\text{-}IN}$ + $I_{Off\text{-}Lkg\text{-}OUT}$	Sum of leakage current from IN and OUT pins in Off state (Source)	-12.5 V < V_{IN} <12.5 V; V_{OUT} = 0 V; EN = Low; +V_s = 15V; (-V_s) = -15 V ,TPS26611/12/14 Only	–9.75		–5.25	µA
		-12.5 V < V_{OUT} < 12.5 V; V_{IN} = 0 V; EN = Low; +V_s = 15V; (-V_s) = -15 V, TPS26611/12/14 Only	–9.75		–5.25	µA
$I_{Off\text{-}Lkg\text{-}IN}$	Leakage current from IN pin in Off state (Source)	-12.5 V< V_{IN} <12.5 V; V_{OUT} = 0 V; EN = Low; +V_s = 15V; (-V_s) = -15 V ,TPS26611/12/14 Only	–6		–1	µA
$I_{Off\text{-}Lkg\text{-}OUT}$	Leakage current from OUT pin in Off state (Source)	-12.5 V < V_{OUT} < 12.5 V; V_{IN} = 0 V; EN = Low; +V_s = 15V; (-V_s) = -15 V ,TPS26611/12/14 Only	–6		–1	µA
Overvoltage and Undervoltage Cutoff for OUT Pin						
V_{OUT_OVLO}	OUT Overvoltage Protection Threshold, Rising	TPS26610/11/13/14 Only	(+Vs)+0.05		(+Vs)+0.30	V
		TPS26612 Only	(+Vs)+1		(+Vs)+1.50	V
$V_{OUT_OVLO_hyst}$	OUT Overvoltage Hysterises		30		75	mV
V_{O/I_UVLO}	OUT/IN Undervoltage Protection Threshold, Falling	TPS26610/11/12 Only	(–Vs)-0.40		(–Vs)-0.20	V

Copyright © 2021 Texas Instruments Incorporated

7.5 Electrical Characteristics (continued)

–40° C ≤ T_A = T_J ≤ +125° C, 2.25 V < +Vs < 30 V, -20 V < -Vs < 0 V, MODE = GND, $\overline{SGOOD}$ = Open, EN = 3.3 V (All voltages referenced to GND, (unless otherwise noted))

PARAMETER		TEST CONDITIONS	MIN	TYP	MAX	UNIT
V_{O/I_UVLO_hyst}	OUT/IN undervoltage Hysterises	TPS26610/11/12 Only	30		75	mV
V_{O_UVLO}	OUT Undervoltage Protection Threshold, Falling	TPS26613/14 Only	(–Vs)-0.40		(–Vs)-0.20	V
$V_{O_UVLO_hyst}$	OUT undervoltage Hysterises	TPS26613/14 Only	30		75	mV
POWER SUPPLY PINS (+Vs/-Vs)						
$V_{(+Vs)}$	+Vs Supply Operating Voltage	TPS26610/11/13/14	2.25		30	V
$V_{(+Vs)}$	+Vs Supply Operating Voltage	TPS26612 only	4		30	V
$V_{(-Vs)}$	-Vs Supply Operating Voltage		–20		0	V
$Vs_{_DIFF}$	Difference between +Vs and -Vs		3		50	V
$I_{(+Vs)}$	Current sourced from +Vs supply to GND in normal operation	$\overline{SGOOD}$ = Floating		1.07	1.65	mA
$I_{(+Vs)}$	Current sourced from +Vs supply to GND in fault operation	$\overline{SGOOD}$ = Floating		1.2	1.75	mA
$I_{(-Vs)}$	Current sinked by -Vs supply from GND				0.2	mA
I_{VS_OFF}	OFF State Supply Current	EN = Low (TPS26611/12/14 only)			0.27	mA
Loop Testing Vs/-Vs UNPOWERED (TPS26610/13 only)						
$V_{(IN-OUT)no_Vs}$	Current Loop Testing : IN to OUT Voltage drop	+/-20mA current through IN pin		±5	±8.5	V
I_{Qno_Vs}	Percentage of forced IN current going to -Vs pin				20	%
I_{OL_noVs}	No supply current limit		±22		±45.5	mA
PASS FET						
R_{ON}	IN to OUT total ON resistance	–40 °C < T < 125 °C, $I_{(IN)}$ < Overload Current	4.8	7.5	12.5	Ω
ENABLE (EN) TPS26611/12/14 Only						
$V_{(ENR)}$	EN Rising Threshold				1.72	V
$V_{(ENF)}$	EN Falling Threshold		1			V
$I_{(EN_LKG)}$	EN Leakage Current (Sink)	$V_{(EN)}$ = 5.5 V			10	µA
$I_{(EN_LKG)}$	EN Leakage Current (Source)	$V_{(EN)}$ = 0 V	-10			µA
$V_{(EN)}$	EN Open Circuit Voltage	$I_{(EN)}$ = –0.1 µA		2.1	2.5	V
VSNS (Supply Sensing) TPS26610/13 only						
$V_{(SNSR)}$	VSNS Rising threshold				1.72	V
$V_{(SNSF)}$	VSNS Falling threshold		1			V
SIGNAL GOOD ($\overline{SGOOD}$)						
$V_{OH_\overline{SGOOD}}$	$\overline{SGOOD}$ Output Level, HIGH	(+Vs) ≤ 2.5 V, 0 mA < $I_{\overline{SGOOD}}$ < 1 mA	(+Vs)*(0.8)		(+Vs)	V

Copyright © 2021 Texas Instruments Incorporated

7.5 Electrical Characteristics (continued)

–40° C ≤ T_A = T_J ≤ +125° C, 2.25 V < +Vs < 30 V, -20 V < -Vs < 0 V, MODE = GND, $\overline{SGOOD}$ = Open, EN = 3.3 V (All voltages referenced to GND, (unless otherwise noted))

PARAMETER		TEST CONDITIONS	MIN	TYP	MAX	UNIT
$V_{OH_\overline{SGOOD}}$	$\overline{SGOOD}$ Output Level, HIGH	(+Vs) > 2.5 V, 0 mA < $I_{\overline{SGOOD}}$< 1 mA	2		3	V
$R_{\overline{SGOOD}}$	$\overline{SGOOD}$ pull down impedance	0 µA < $I_{\overline{SGOOD}}$ < 200 µA			6.3	kΩ
MODE						
$I_{(MODE)}$	MODE Source Current		1.55	2	2.4	µA
R_{MODE}	Mode Selection Resistor			180		kΩ
THERMAL SHUTDOWN						
$T_{(TSD)}$	Thermal Shutdown (TSD) threshold, Rising			160		°C
$T_{(TSDHyst)}$	Thermal Shutdown (TSD) Hysterises			11		°C
HART						
BW	Input small signal bandwidth	–25 mA < I_{IN} < 25 mA, ΔI_{IN} = 1 mA_{pp} at 1 kΩ		10		kHz

7.6 Timing Requirements

–40° C ≤ T_A = T_J ≤ +125° C, 2.25 V < +Vs < 30 V, -20 V < -Vs < 0 V, MODE = GND, $\overline{SGOOD}$ = Open, EN = 3.3V (All voltages referenced to GND, (unless otherwise noted))

PARAMETER		TEST CONDITIONS	MIN	TYP	MAX	UNIT
t_{ON_dly}	Turn ON delay with Vs/-Vs supply	Delay from +Vs/-Vs supply applied to FET on, EN = Floating		120		µs
t_{OFF_dly}	Turn OFF delay with +Vs/-Vs supply	Delay from +Vs/-Vs supply removed to FET off, EN = Floating			10	µs
$t_{ON_EN_dly}$	Turn ON delay with EN pin	+Vs/-Vs supply present, Delay from EN HIGH to FET on,		120		µs
$t_{OFF_EN_dly}$	Turn OFF delay with EN pin	+Vs/-Vs supply present, Delay from EN LOW to FET off			10	µs
t_{OL}	Overload Current Limit response time	Load transient from 20 mA to 50 mA. Time from Load Transient to Current coming within 20%.of I_{OL}.		30	55	µs
t_{OL_PULSE}	Pulse Overload Current Limit response time	Load transient from 20 mA to 80 mA. Time from Load Transient to Current coming within 20% of I_{OL_Pulse}		20	50	µs
$t_{FASTRIP}$	Fast-Trip Response Time	MODE = GND, Current exceeding 120mA to FET off			5	µs
		MODE = 180-kΩto GND or Open, Current exceeding 240 mA to FET off			5	µs
$T_{SG_Deglitch}$	$\overline{SGOOD}$ Deglitch Delay	Deglitch delay during $\overline{SGOOD}$ assertion		685		µs
		Deglitch delay during $\overline{SGOOD}$ de-assertion			1.3	ms
$t_{OUT_OV_CUT}$	OUT OVLO Cutoff detection-time	$V_{(OUT)}$ ↑ 100 mV above V_{OUT_OVLO} to FET OFF	1		5	µs
t_{O/I_UV_CUT}	OUT OR IN UVLO Cutoff detectiontime	OUT/IN ↓100 mV below V_{O/I_UVLO} to FET OFF, TPS26610/11/12 Only	1		5	µs
$t_{O_UV_CUT}$	OUT UVLO Cutoff detection-time	OUT ↓100 mV below V_{O_UVLO} to FET OFF, TPS26613/14 Only	1		5	µs
$t_{OUT_CUT_Rec}$	OUT Cutoff recovery time	$V_{(OUT)}$ ↓ 100 mV below $V_{OUT_OVLO_hyst}$ to FET ON		21		µs

Copyright © 2021 Texas Instruments Incorporated

7.6 Timing Requirements (continued)

–40° C ≤ T_A = T_J ≤ +125° C, 2.25 V < +Vs < 30 V, -20 V < -Vs < 0 V, MODE = GND, $\overline{SGOOD}$ = Open, EN = 3.3V (All voltages referenced to GND, (unless otherwise noted))

PARAMETER		TEST CONDITIONS	MIN	TYP	MAX	UNIT
t_{O/I_CUT_Rec}	IN OR OUT Cutoff recovery time	OUT/IN ↑100 mV above VO/ I_UVLO_hyst to FET ON, TPS26610/11/12 Only		23.5		µs
$t_{O_CUT_Rec}$	OUT Cutoff recovery time	OUT↑100 mV above $V_{O_UVLO_hyst}$ to FET ON, TPS26613/14 Only		23.5		µs
t_{OL_Expiry}	Overload Current Limit expiry time	Load transient from 20 mA to 50 mA		100		ms
$t_{OL_Pulse_Expiry}$	Pulse Overload Current expiry	Load transient from 20 mA to 100 mA		50		ms
t_{OL_Extend}	I_{OL} < I < I_{OL_PULSE} expiry timer			5.00		s
t_{RETRY1}	Auto Retry Timer 1			0.80		s
t_{RETRY2}	Auto Retry Timer 2			1.60		s
t_{AR_dis}	Auto Retry disabled time (TPS26612 only)			5		s

Copyright © 2021 Texas Instruments Incorporated

7.7 Typical Characteristics

+Vs = 15 V; –Vs = –15 V, MODE = OPEN, $\overline{SGOOD}$ = OPEN; EN/VSNS = OPEN; T_A = 25° C (unless otherwise noted)

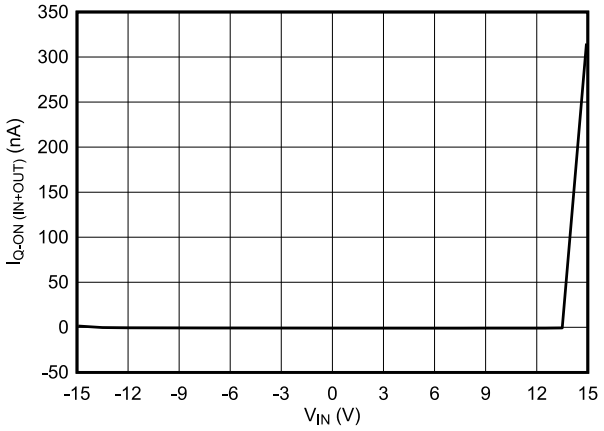

+Vs = 15 V; -Vs = GND; V_{IN} = V_{OUT}

Figure 7-1. $I_{Q-ON\ (IN+OUT)}$ vs V_{IN} in Normal Operation

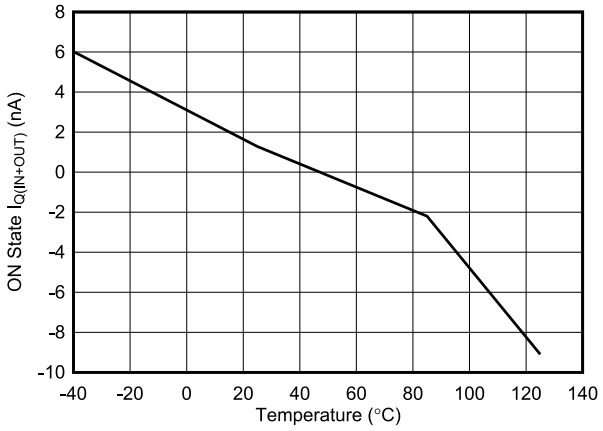

V_{IN} = V_{OUT} = 0 V

Figure 7-2. $I_{Q\ (IN+OUT)}$ vs Temperature in Normal Operation

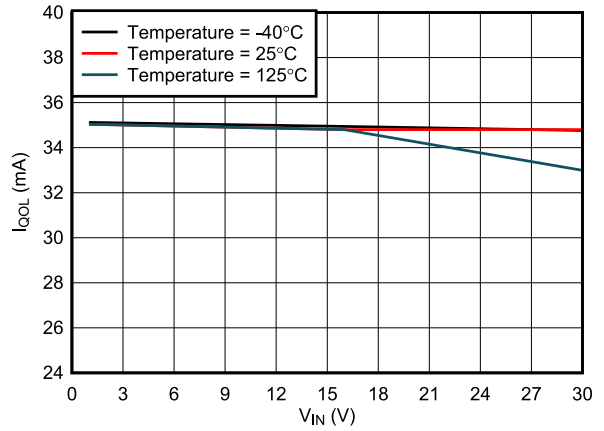

+Vs = 30 V; –Vs = GND; V_{IN} = V_{OUT} + 1 V

Figure 7-3. I_{OL} vs V_{IN} for I_{OUT} > 0

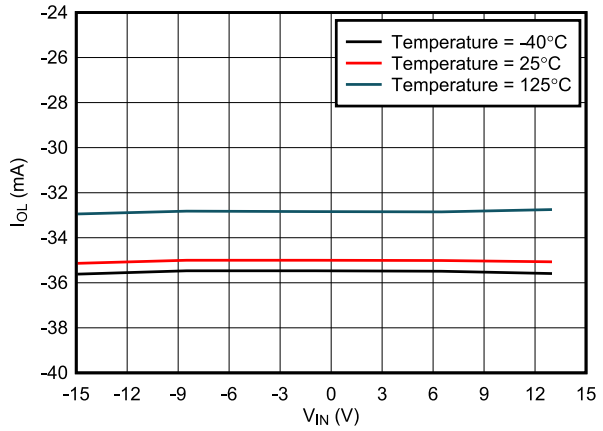

V_{IN} = V_{OUT} - 1 V

Figure 7-4. I_{OL} vs V_{IN} for I_{OUT} < 0

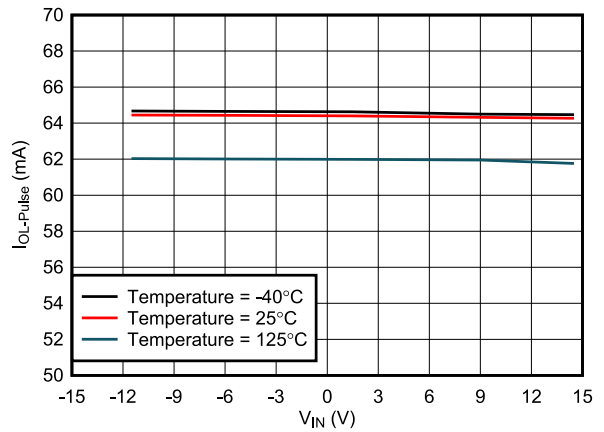

V_{IN} = V_{OUT} + 1.5 V; MODE = Open or 180 kΩ

Figure 7-5. $I_{OL-Pulse}$ vs V_{IN}

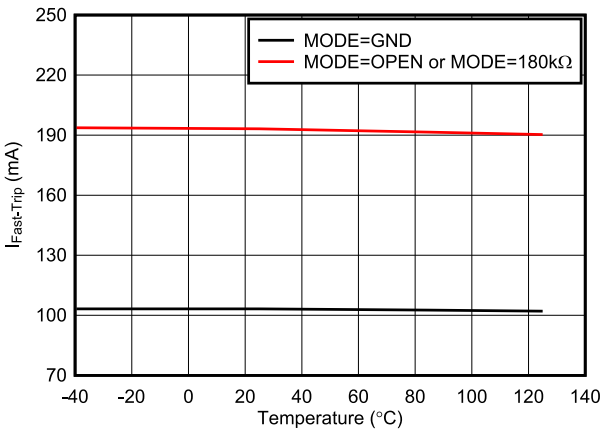

Figure 7-6. $I_{Fast-trip}$ vs Temperature for I_{OUT} > 0

Copyright © 2021 Texas Instruments Incorporated

7.7 Typical Characteristics (continued)

+Vs = 15 V; –Vs = –15 V, MODE = OPEN, $\overline{SGOOD}$ = OPEN; EN/VSNS = OPEN; T_A = 25° C (unless otherwise noted)

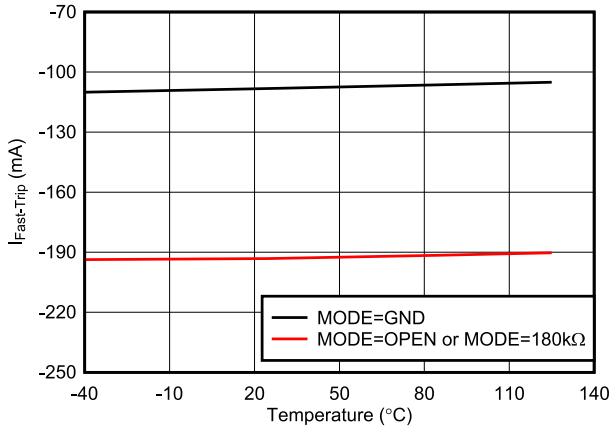

Figure 7-7. $I_{Fast\text{-}trip}$ vs Temperature for I_{OUT} < 0

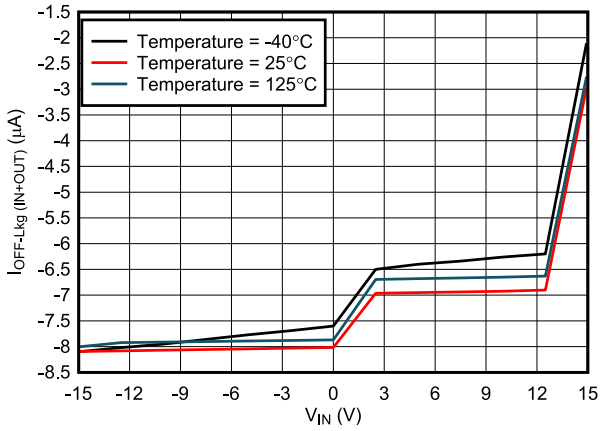

Figure 7-8. ($I_{OFF\text{-}Leakage\text{-}IN}$ + $I_{OFF\text{-}Leakage\text{-}OUT}$) vs V_{IN}

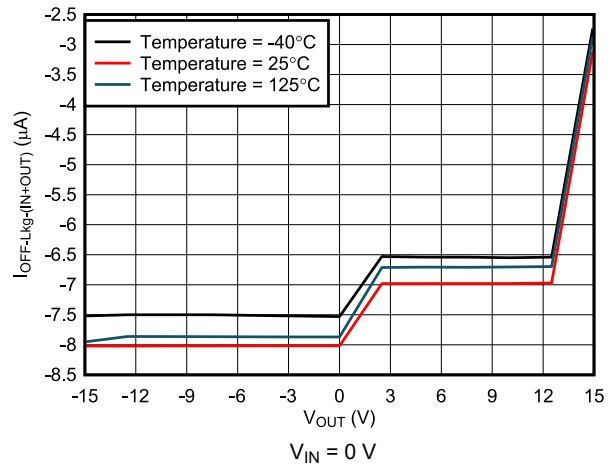

Figure 7-9. ($I_{OFF\text{-}Leakage\text{-}IN}$ + $I_{OFF\text{-}Leakage\text{-}OUT}$) vs V_{OUT}

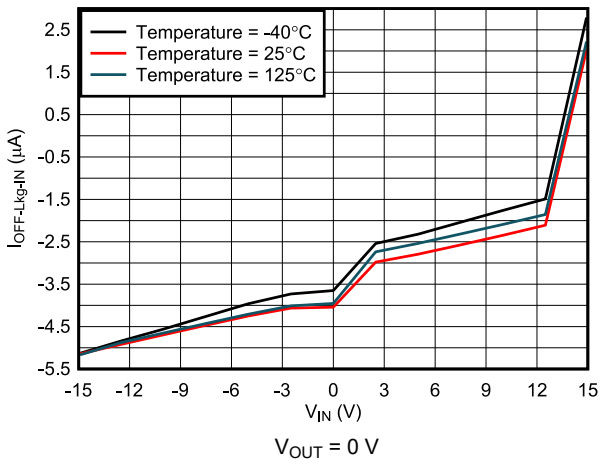

Figure 7-10. $I_{OFF\text{-}Leakage\text{-}IN}$ vs V_{IN}

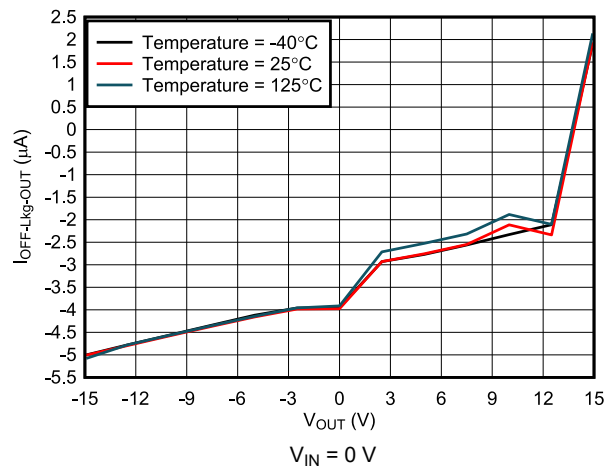

Figure 7-11. $I_{OFF\text{-}Leakage\text{-}OUT}$ vs V_{OUT}

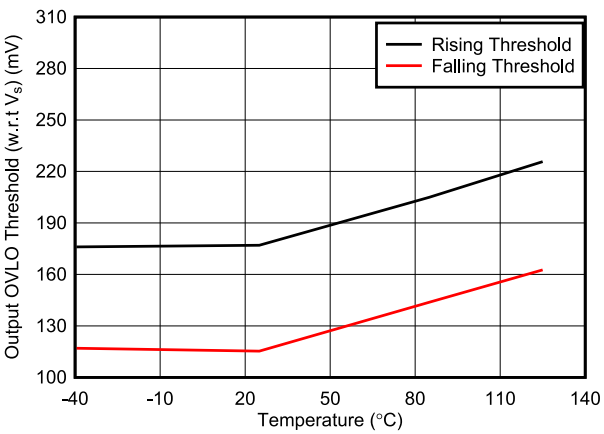

Figure 7-12. OUT OVLO Thresholds (w.r.t Vs) vs Temperature for TPS26611 and TPS26610

Copyright © 2021 Texas Instruments Incorporated

7.7 Typical Characteristics (continued)

+Vs = 15 V; –Vs = –15 V, MODE = OPEN, $\overline{SGOOD}$ = OPEN; EN/VSNS = OPEN; T_A = 25º C (unless otherwise noted)

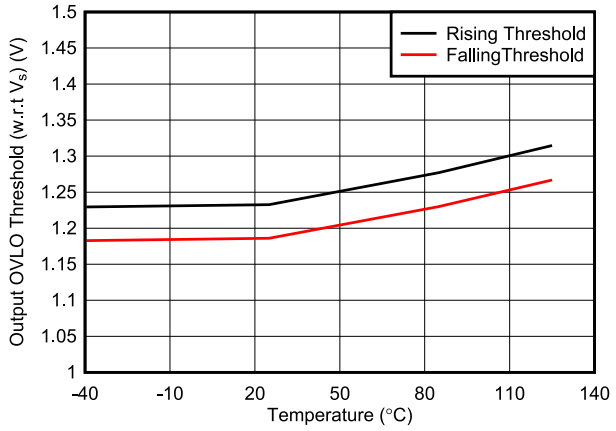

Figure 7-13. OUT OVLO Thresholds (w.r.t Vs) vs Temperature for TPS26612

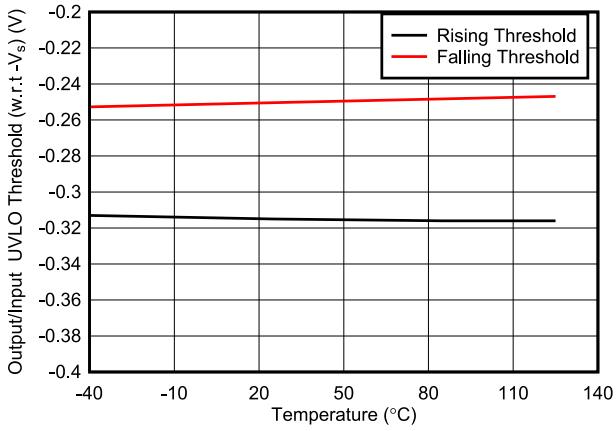

Figure 7-14. OUT and IN UVLO Thresholds (w.r.t -Vs) vs Temperature

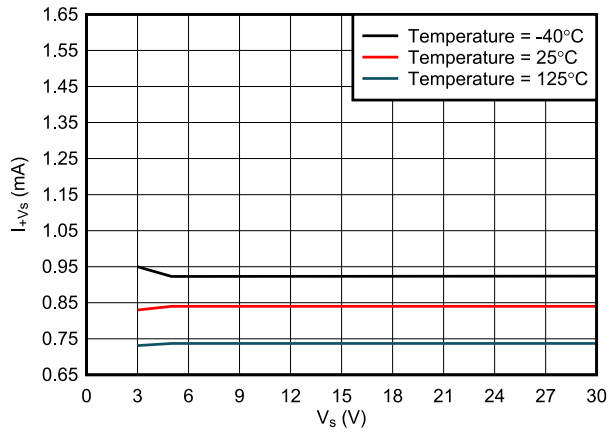

Figure 7-15. I_{Vs} vs Vs in ON State

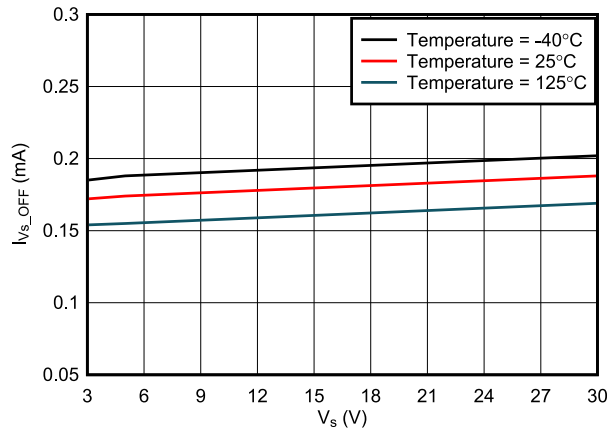

Figure 7-16. I_{Vs} vs Vs in OFF State (EN = 0) for TPS26611 and TPS26612

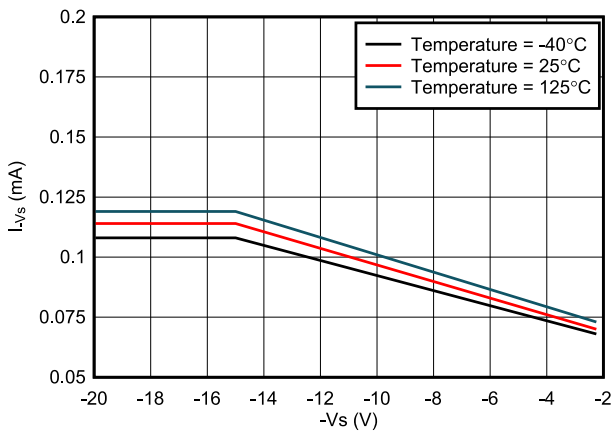

Figure 7-17. I_{-Vs} vs -Vs in ON State

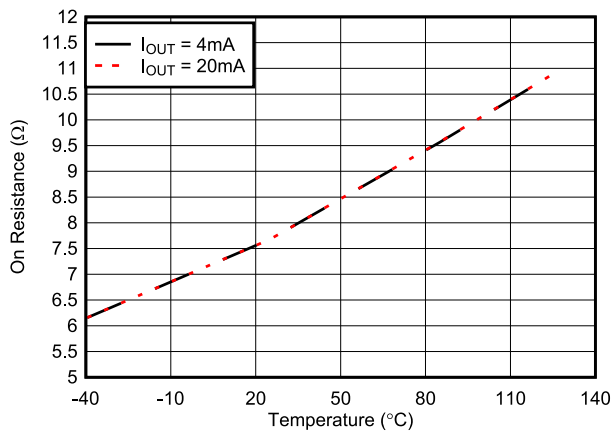

Figure 7-18. R_{ON} vs Temperature

7.7 Typical Characteristics (continued)

+Vs = 15 V; –Vs = –15 V, MODE = OPEN, $\overline{SGOOD}$ = OPEN; EN/VSNS = OPEN; T_A = 25° C (unless otherwise noted)

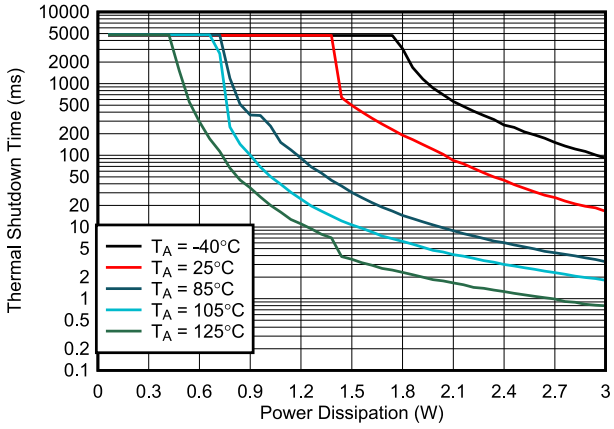

I_{OUT} = 60 mA, MODE = 180 kΩ

Figure 7-19. Thermal shutdown time vs Power Dissipation

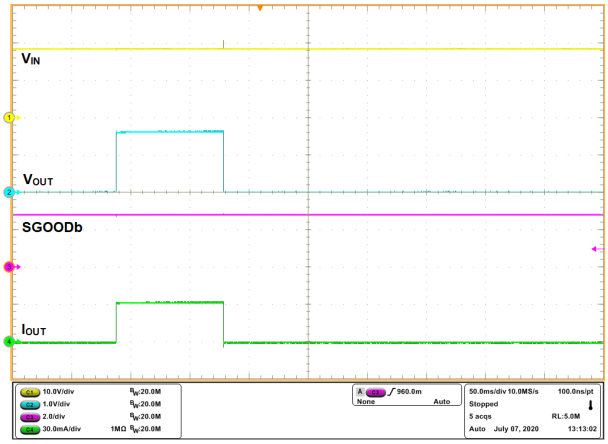

Figure 7-20. Current Limit with MODE = GND

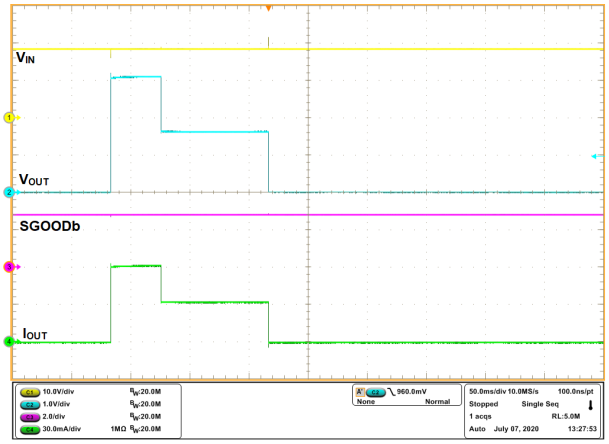

Figure 7-21. Current Limit with MODE = OPEN

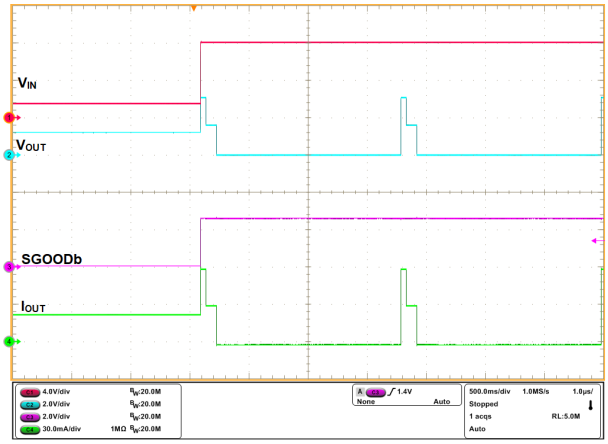

Figure 7-22. Auto Retry with MODE = 180 kΩ

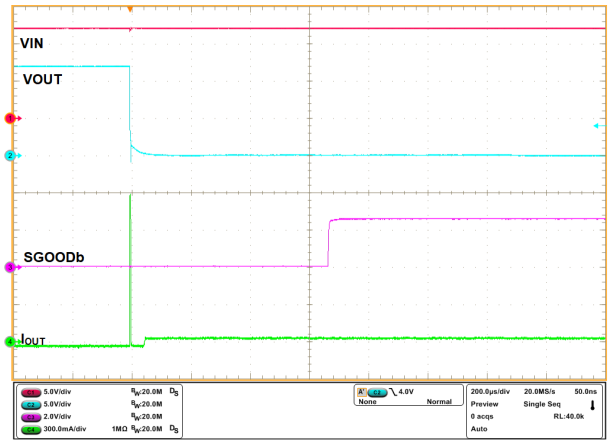

Figure 7-23. Fast-Trip Protection

Copyright © 2021 Texas Instruments Incorporated

8 Detailed Description

8.1 Overview

The TPS2661x is a family of devices providing complete protection for current inputs, voltage inputs/outputs, and sensor supply in industrial and process automation systems. The device supports both unipolar 4-mA to 20-mA current loops and bipolar ±20-mA current loops. The TPS26610 and TPS26613 are tailored for current inputs. The device can be powered from an external supply and draws < 100-nA maximum current from the current loop enabling design of high accuracy analog input systems. The devices feature an accurate 32-mA current limit, which enables using low power components in the loop like the sense resistors, which reduces the overall system size and cost. The TPS26611 and TPS26614 are specifically tailored for universal current inputs and voltage/current multiplexed inputs while the TPS26612 is tailored for protection of two wire sensor transmitters. The TPS2661x devices feature a configurable MODE pin to allow higher current for powering up of a variety of two wire transmitters. The TPS26611 also has enable control for designing V/I multiplexed analog inputs or universal analog input-output modules. The device also features a signal-good output to indicate if the there is a valid current input. The signal good pin goes high in the event of any fault or during start-up of the system if there is an inrush current. The device also protects the system from output miswiring in analog output modules or sensor transmitters by cutting off the current path if the OUT pin goes outside the +/–Vs supply rails.

The robust protection of the TPS2661x along with its ±50-V rating helps to simplify the system designs for surge compliance. The TPS2661x devices are immune to noise tests like electrical fast transients that are common in industrial applications. These devices also simplify the system design for protection from surge transients (IEC61000-4-5).

8.2 Functional Block Diagram

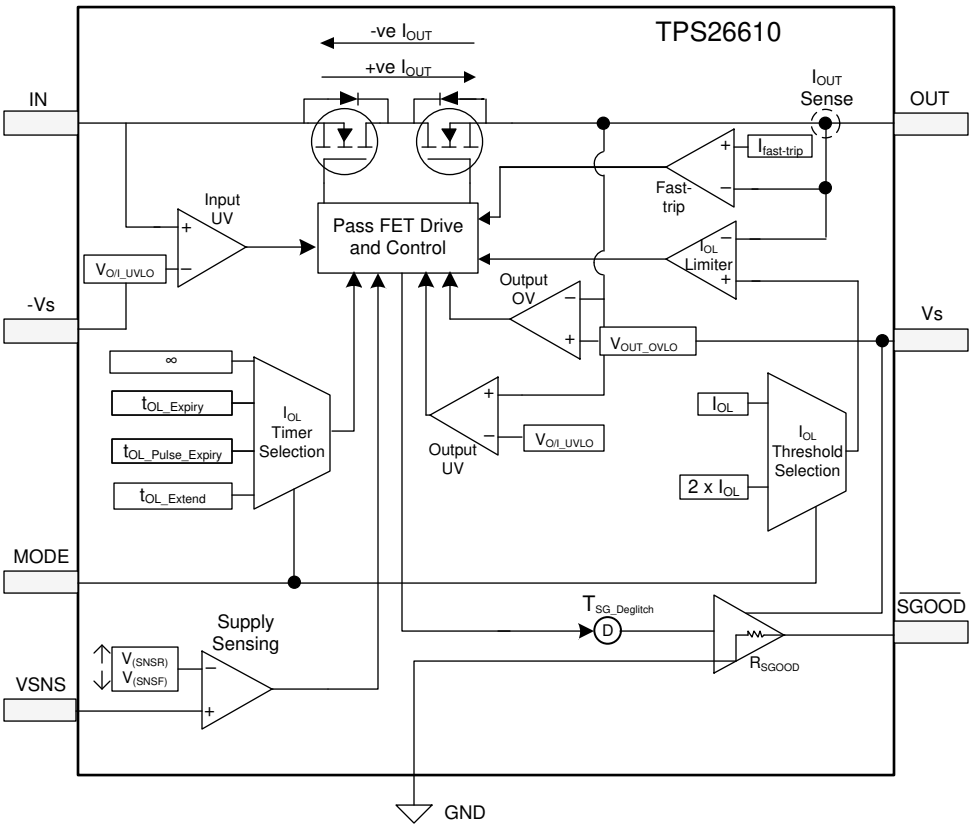

Figure 8-1. Functional Block Diagram for TPS26610

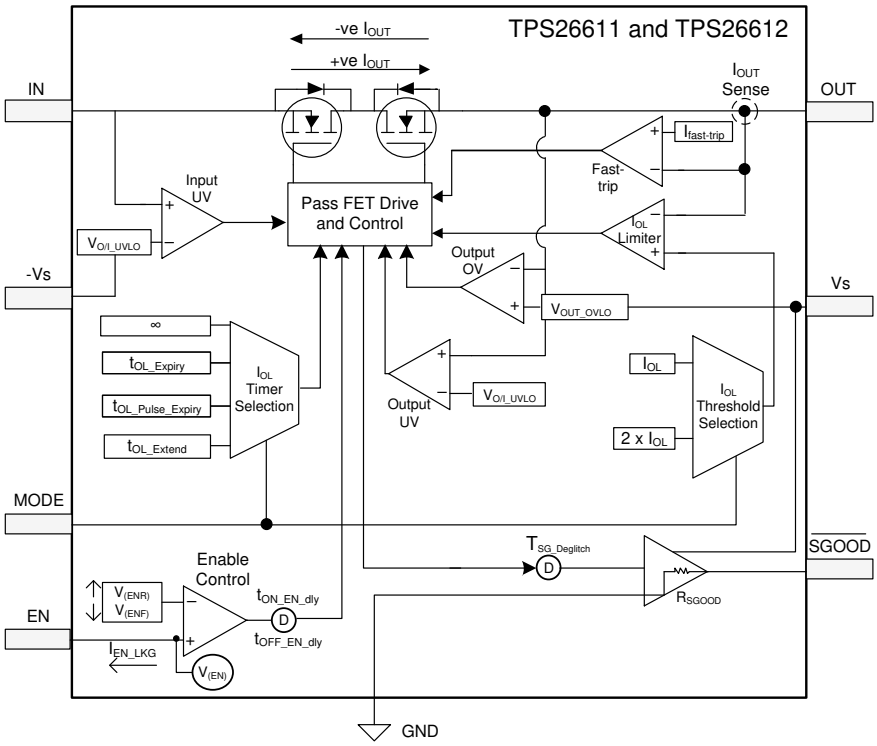

Figure 8-2. Functional Block Diagram for TPS26611 and TPS26612

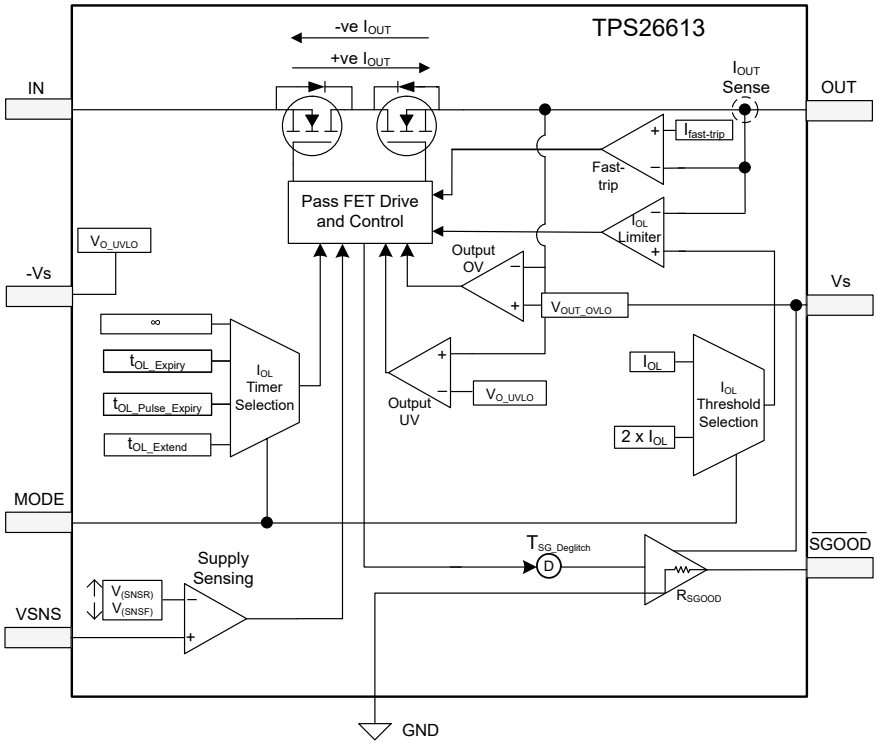

Figure 8-3. Functional Block Diagram for TPS26613

Copyright © 2021 Texas Instruments Incorporated

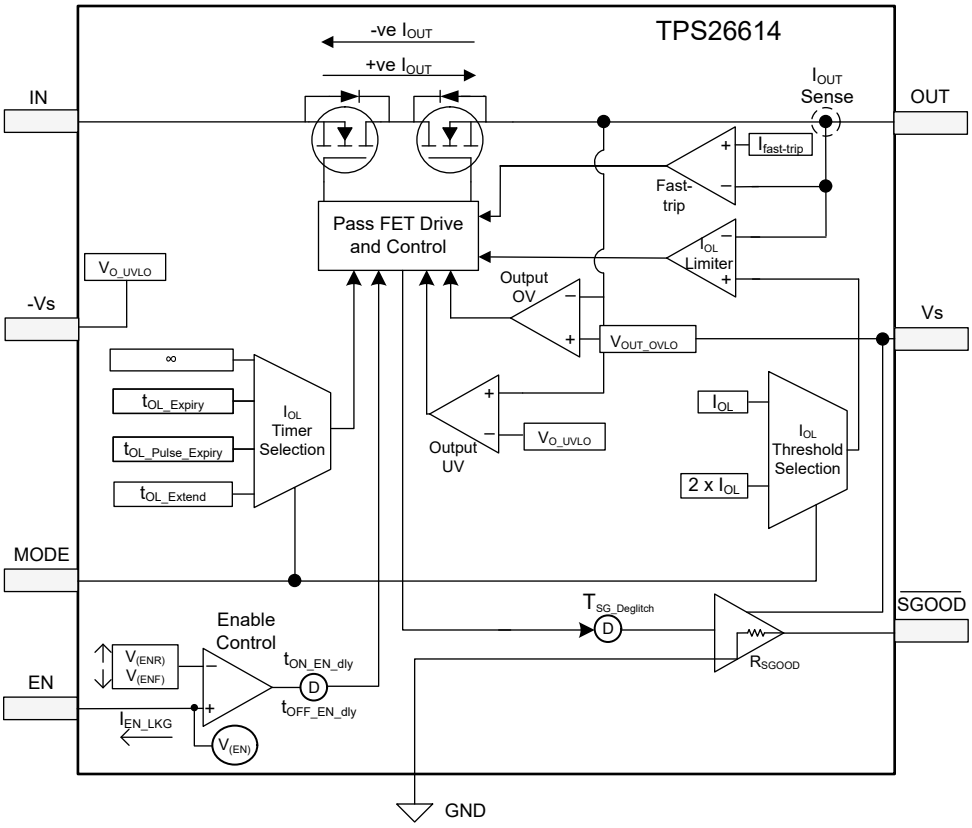

Figure 8-4. Functional Block Diagram for TPS26614

8.3 Feature Description

8.3.1 Overload Protection and Fast-Trip

The TPS2661x devices feature a fixed I_{OL} value of 32-mA typical, bidirectional current limit. For use in unipolar systems like 4–20-mA current loops where negative current is not desired, connect –Vs to GND to cut off when there is a flow of reverse current (OUT to IN). If the current tries to exceed the I_{OL} limit, the device regulates the current, eventually reducing the output voltage. Overload current threshold and time for overload protection can be selected by the MODE pin. See *Device Functional Modes* for details. The power dissipation across the device during current regulation is $(V_{IN} – V_{OUT}) \times I_{OUT}$, which can heat up the device and lead to thermal shutdown. After thermal shutdown, the device goes into auto retry. The mode pin selects the auto retry period. See Table 8-3 and Figure 8-24 for selection of the auto retry period.

The TPS2661x devices also feature a fast-trip comparator. During fast transient events like output short circuit, miswiring, hotplug, and so forth, the current through the device increases rapidly. Due to limited bandwidth, the current limit amplifier cannot respond quickly to these events . Hence, the fast-trip comparator architecture is included for fast turn OFF of the internal FET during these events. The device turns off the internal FETs within a time of $t_{(FASTTRIP)}$. See the *Timing Requirements* for $t_{(FASTTRIP)}$. The fast-trip circuit holds the internal FET off for a short duration (50 µs), after which, the device turns back on slowly, allowing the current-limit loop to regulate the output current to current limit as per MODE pin configuration. Figure 8-5 and Figure 8-7 illustrate the current limit behavior of TPS2661x devices. Figure 8-8 illustrates the fast-trip protection of TPS2661x devices and Figure 8-9 illustrates the auto-retry behavior in overload fault.

Copyright © 2021 Texas Instruments Incorporated

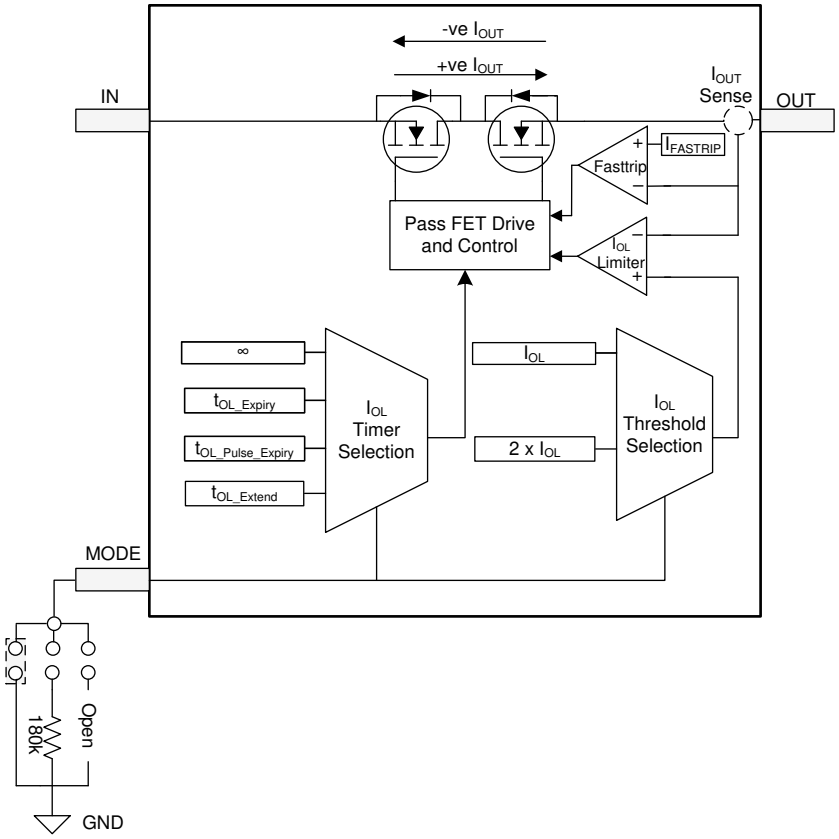

Figure 8-5. Overload Protection and Fast-Trip

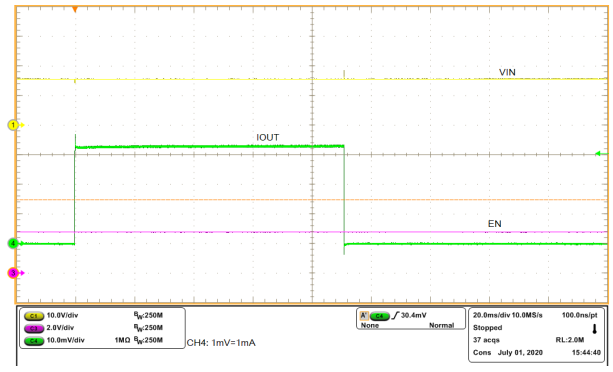

Figure 8-6. Current Limit Behavior for I_{OUT} < 2 × I_{OL} with MODE = GND

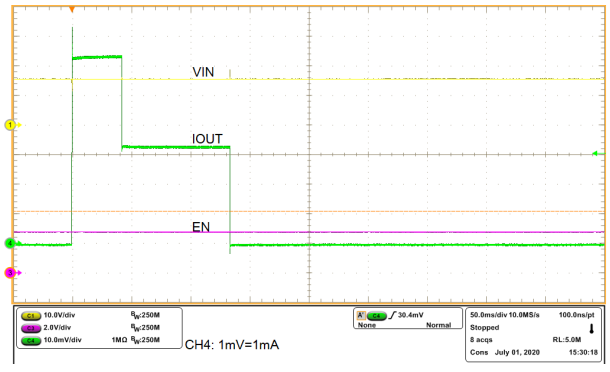

Figure 8-7. Current Limit Behavior for I_{OUT} > 2 × I_{OL} with MODE = 180 kΩ

Copyright © 2021 Texas Instruments Incorporated

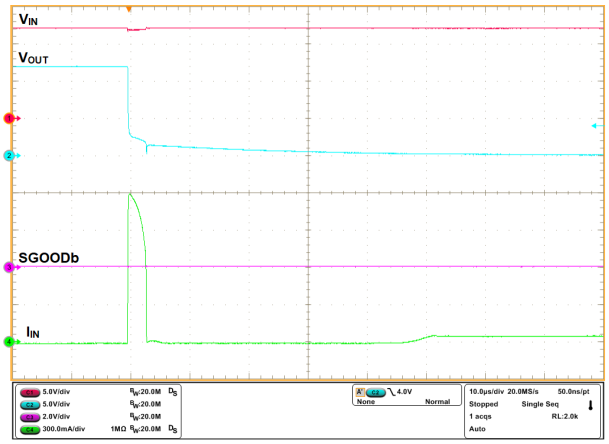

Figure 8-8. Fast-Trip Behavior

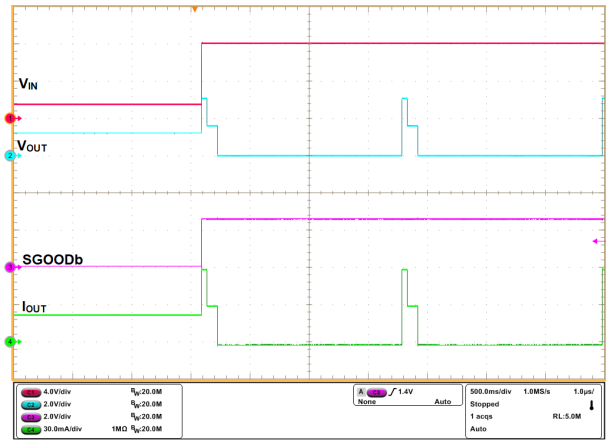

Figure 8-9. Auto-Retry Behavior

8.3.2 Reverse Current Blocking for Unipolar Current Inputs TPS26610, TPS26611 and TPS26612 (4–20 mA, 0–20 mA)

For reverse current blocking with TPS26610, TPS26611 and TPS26612 devices, connect burden resistor to GND and use single supply (+Vs, GND) with the device as shown in Figure 8-10. In this configuration, the device blocks the reverse current (OUT to IN) when IN pin voltage is negative.

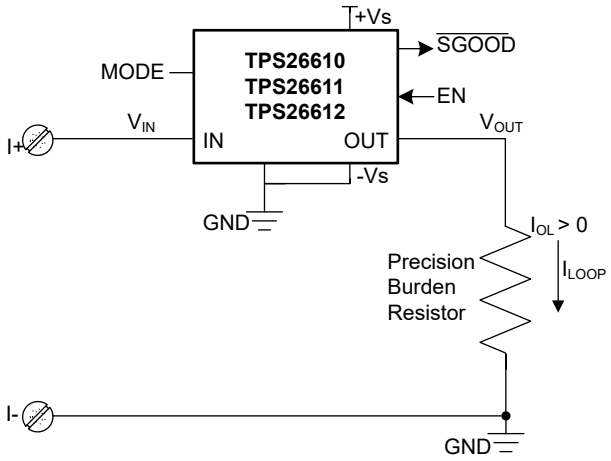

Figure 8-10. Reverse Current Blocking for Unipolar Current Inputs With TPS26610, TPS26611 and TPS26612

8.3.3 OUTPUT and INPUT Cutoff During Overvoltage, Undervoltage Due to Miswiring

Table 8-1 summarizes the output and input cutoff present in TPS2661 devices

Table 8-1. Output and Input Miswiring Protection in TPS2661 Devices

Device	Output Overvoltage	Output Undervoltage	Input Undervoltage
TPS26610	Y	Y	Y
TPS26611	Y	Y	Y
TPS26612	Y	Y	Y
TPS26613	Y	Y	N
TPS26614	Y	Y	N

Copyright © 2021 Texas Instruments Incorporated

8.3.3.1 Output Overvoltage With TPS2661x Devices

The TPS2661x devices provide protection from overvoltage events on OUT pin by turning off the internal pass FETs and cutting off the signal path whenever V_{OUT} goes above V_{OUT_OVLO} threshold. The signal path through TPS2661x is restored again when V_{OUT} goes below [V_{OUT_OVLO} – $V_{OUT_OVLO_Hyst}$] value. The device turns off the internal FETs within a time of $t_{OUT_OV_CUT}$ after output voltage has gone above V_{OUT_OVLO} threshold. See Timing Requirements in Specifications for $t_{OUT_OV_CUT}$.The device recovers from output overvoltage within a time of $t_{OUT_CUT_Rec}$ after output voltage has gone below [V_{OUT_OVLO} – $V_{OUT_OVLO_Hyst}$] value. See the *Timing Requirements* in Specifications for $t_{OUT_OV_CUT}$. Figure 8-11 illustrates the output overvoltage protection in TPS2661x devices.

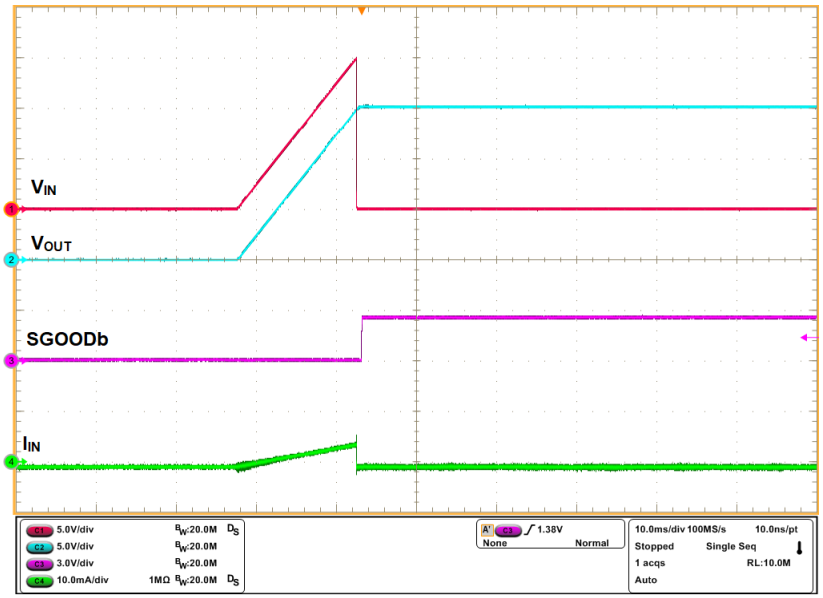

Figure 8-11. Output Overvoltage Protection

8.3.3.2 Output or Input Undervoltage With TPS26610, TPS26611 and TPS26612

TPS26610, TPS26611 and TPS26612 devices provide protection from undervoltage events on IN and OUT pins by turning off the internal pass FETs and cutting off the signal path whenever V_{OUT} or V_{IN} goes below V_{O/I_UVLO} threshold. The signal path through the device is restored again when V_{OUT} or V_{IN} goes above [V_{O/I_UVLO} – V_{O/I_UVLO_Hyst}] value. The device turns off the internal FETs within a time of t_{O/I_UV_CUT} after output or input voltage has gone below V_{O/I_UVLO} threshold. The device recovers from output or input undervoltage within a time of $t_{OUT_CUT_Rec}$ after output or input voltage has gone above [V_{O/I_UVLO} – V_{O/I_UVLO_Hyst}] voltage. See the *Timing Requirements* in Specifications for t_{O/I_UV_CUT} and $t_{OUT_CUT_Rec}$.

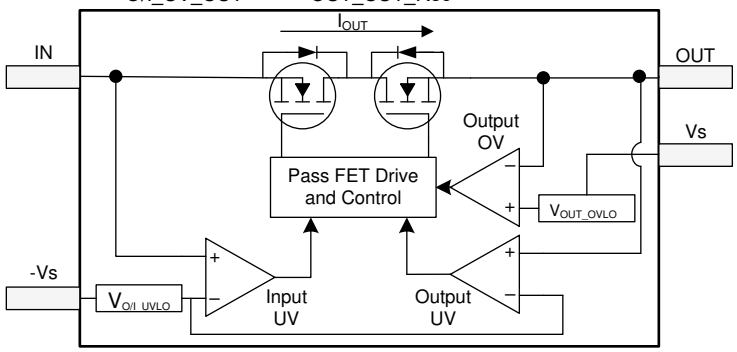

Figure 8-12. Output and Input Undervoltage Cutoff With TPS26610, TPS26611 and TPS26612

Copyright © 2021 Texas Instruments Incorporated

In case of overvoltage, undervoltage and miswiring events on IN and OUT pins, voltages exceeding Absolute Maximum Ratings (see *Specifications*) for IN and OUT Pins can damage the device. Figure 8-13 and Figure 8-14 illustrate the output and input undervoltage protection in these devices.

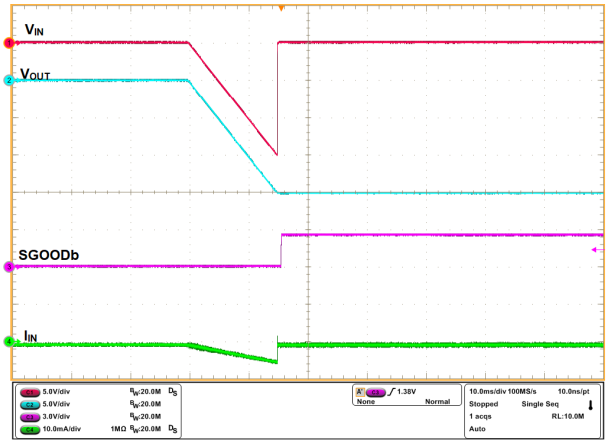

Figure 8-13. Output Undervoltage Protection

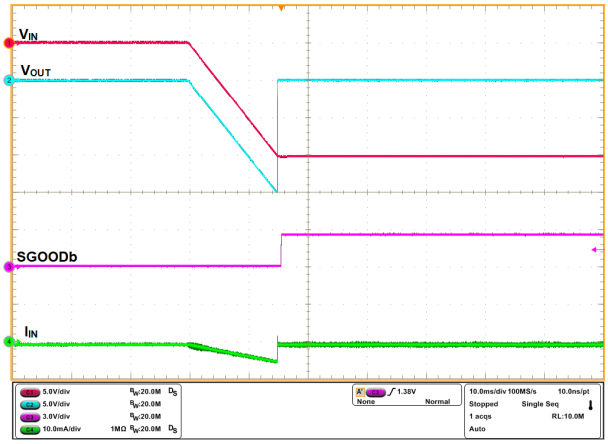

Figure 8-14. Input Undervoltage Protection

8.3.3.3 Output Undervoltage With TPS26613 and TPS26614

TPS26613 and TPS26614 devices provide protection from undervoltage events OUT pins by turning off the internal pass FETs and cutting off the signal path whenever VOUT goes below V_{O_UVLO} threshold. The signal path through the device is restored again when VOUT goes above [V_{O_UVLO} – $V_{O_UVLO_Hyst}$] value. The device turns off the internal FETs within a time of $t_{O_UV_CUT}$ after output voltage has gone below V_{O_UVLO} threshold. The device recovers from output undervoltage within a time of $t_{OUT_CUT_Rec}$ after output voltage has gone above [V_{O_UVLO} – $V_{O_UVLO_Hyst}$] voltage. See the *Timing Requirements* in Specifications for $t_{O_UV_CUT}$ and $t_{OUT_CUT_Rec}$.

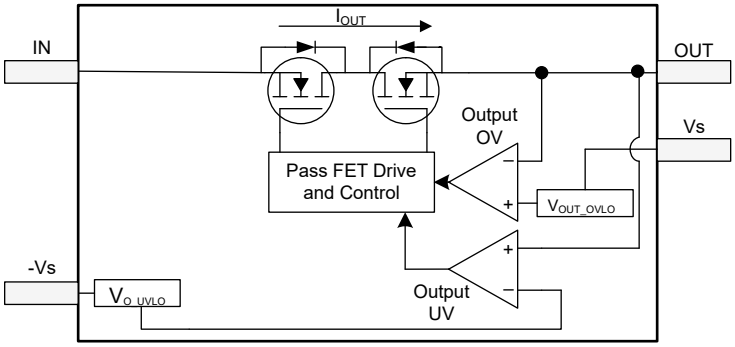

Figure 8-15. Output Undervoltage Cutoff in TPS26613 and TPS26614

8.3.4 External Power Supply (±Vs)

The TPS2661x devices are powered from an external +Vs/–Vs supply. This feature ensures that the TPS2661x does not draw any current from the IN/OUT pins which carry current information. TPS26610 allows current conduction from IN to OUT pins when +Vs/-Vs supplies are not present. TPS26611 and TPS26612 devices need +Vs/–Vs or +Vs/GND for operation.

For systems requiring positive and negative voltage on IN and OUT pins of TPS2661x, use bipolar supplies (+Vs and –Vs) with TPS2661x. Connect positive supply rail to +Vs and negative supply rail to –Vs pins. The device supports dual supplies from as low as ±2.25 V up to ±20 V.

For systems requiring only positive voltage on IN and OUT pins of TPS2661x, use unipolar supply (+Vs and GND) with TPS2661x .Connect positive supply rail to +Vs, and –Vs pin must be connected to GND of device. When powered from single supplies, TPS26610, TPS26611, TPS26613 and TPS26614 devices can be powered from +3 V up to +30 V and TPS26612 can be powered from +4 V up to +30 V.

Copyright © 2021 Texas Instruments Incorporated

The device turns on the internal FETs with a delay time of t_{ON_dly} after powering up of +Vs supply and turns off the internal FET with a delay time of t_{OFF_dly} after powering down of +Vs supply. See the *Timing Requirements* in Specifications for t_{ON_dly} and t_{OFF_dly}.

8.3.5 Loop Testing Without ±Vs Supply (Loop Power Mode in TPS26610, TPS26613 Only)

TPS26610 and TPS26613 devices allow a bipolar current limited conduction through the device even when the external +Vs/–Vs supplies are not there. When the external supply is not there, the device switches to loop power mode and derives its operating power from the 4–20-mA or ±20-mA current loop. This feature enables the field installation engineer to check the wiring of the whole current loop system by passing a test current through the current loop without actually powering on the system. This feature also helps in design of safety critical redundant systems with two redundant measurements for the same current loop. In case power is not available in one system, a second system connected in the loop is still be able to read the current information because the loop is not broken. During loop testing without ±Vs supply, the device has a voltage drop of $V_{(IN-OUT)no_Vs}$, the current through device is limited to I_{OL_noVs}. During loop testing, the device draws a current of I_{OL_noVs} from IN pin. See the *Electrical Characteristics* in Specifications for $V_{(IN-OUT)no_Vs}$, I_{qno_Vs} and I_{OL_noVs}.

The device provides thermal protection during loop testing, if the power dissipation in device increases above 500 mW (typical), the devices turns off internal FET for short durations to limit the power dissipation. Figure 8-16 and Figure 8-17 illustrate the thermal protection during loop testing.

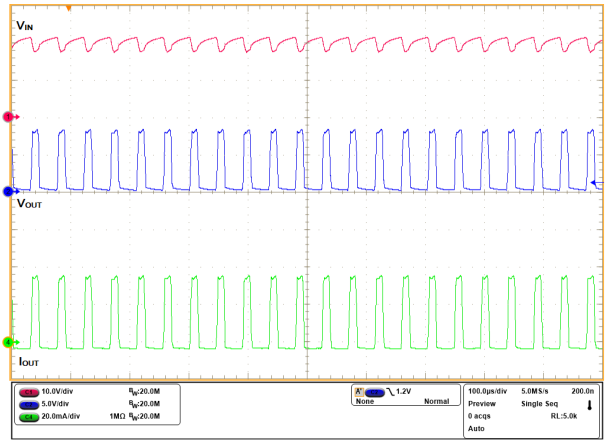

+Vs = 15 V, –Vs = –15 V, R_{OUT} = 250 Ω, V_{IN} = 21 V

Figure 8-16. Thermal Protection During Loop Testing for I_{LOOP} > 0

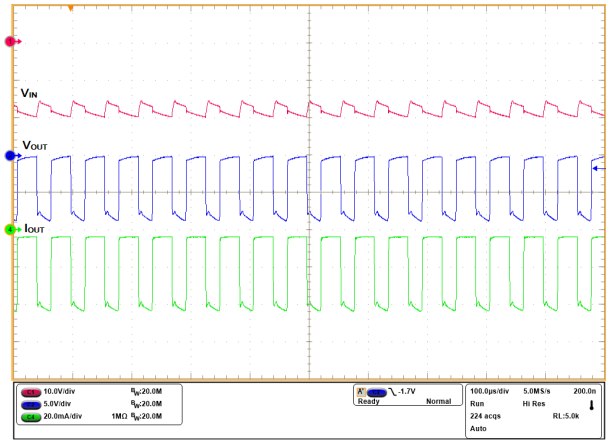

+Vs = 15 V, –Vs = –15 V, R_{OUT} = 250 Ω, V_{IN} = –21 V

Figure 8-17. Thermal Protection During Loop Testing for I_{LOOP} < 0

8.3.5.1 Supply Sensing With VSNS for Loop Power Mode With TPS26610 and TPS26613

For the TPS26610 and TPS26613 devices, the set-point for transition to loop power mode can be set by connecting resistors (R1, R2) from +Vs pin to VSNS pin and GND pin as shown in Figure 8-18. The set-point can be calculated as per Table 8-2. TI recommends to use resistors R1 and R2 for supply sensing when voltage across burden resistor (I_{LOOP} × R_{Burden}) is more than 1.8 V. If VSNS is left open or floating, the device transitions to loop power mode when +Vs is less than 1.8 V.

Table 8-2. Supply Sensing With VSNS for Loop Power Mode

Device Power Mode	+Vs Voltage
±Vs supplies	+Vs ≥ $V_{(SNSR)}$ × (R1 + R2) / R2 (1)
Loop power	+Vs ≤ $V_{(SNSF)}$ × (R1 + R2) / R2 (1) (2)

(1) Use (R1 + R2) ≤ (+Vs) / (45 µA). For $V_{(SNSR)}$ and $V_{(SNSF)}$ values, see the *Electrical Characteristics*.
(2) Keep $V_{(SNSF)}$ × (R1 + R2) / R2 > (I_{LOOP} × R_{Burden})

Copyright © 2021 Texas Instruments Incorporated

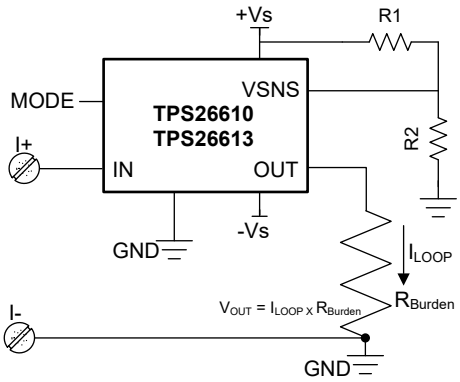

Figure 8-18. Supply Sensing With VSNS

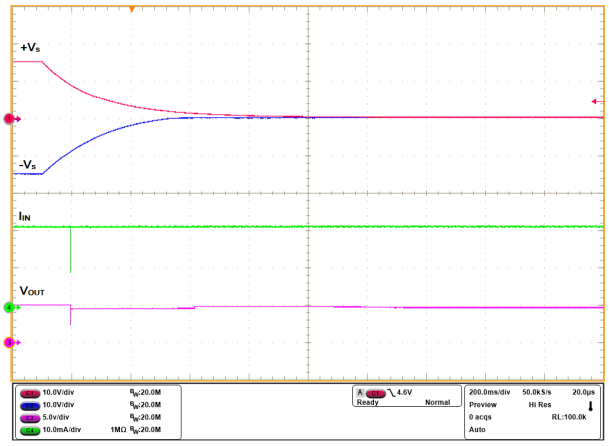

+Vs = 15 V, –Vs = –15 V, R_{OUT} = 250 Ω, MODE = GND

Figure 8-19. Transition to Loop Power With R1 = 47 kΩ and R2 = 6.8 kΩ for Supply Sensing

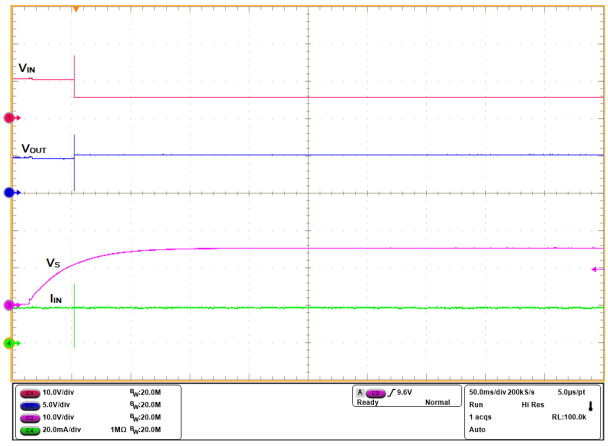

+Vs = 15 V, –Vs = –15 V, R_{OUT} = 250 Ω, MODE = GND

Figure 8-20. Transition to ± Vs Supplies Power with R1 = 47 kΩ and R2 = 6.8 kΩ for supply Sensing

8.3.6 Enable Control With TPS26611, TPS26612, and TPS26614

TPS26611, TPS26612, and TPS26614 devices feature an EN pin for externally controlling the device through a GPIO pin. To enable the device, EN pin can be left floating. The pin is internally pulled up with $V_{(EN)}$.

EN can also be made high with external voltage more than $V_{(ENR)}$ but less that or equal to 5 V. The internal FETs are turned off when EN is pulled below $V_{(ENF)}$. EN pin can source and sink a current of $I_{(EN_LKG)}$. See *Electrical Characteristics* for $V_{(ENF)}$, $V_{(ENR)}$ and $I_{(EN_LKG)}$. The EN feature helps the system designer to design universal voltage and current analog inputs and outputs where a lot of pin multiplexing options are made available to the end user. For turn-on and turn-off delay with EN pin, see $t_{ON_EN_dly}$ and $t_{OFF_EN_dly}$ in *Timing Requirements*. Figure 8-22 and Figure 8-23 illustrate the turn-on and turn-off control with enable pin.

Copyright © 2021 Texas Instruments Incorporated

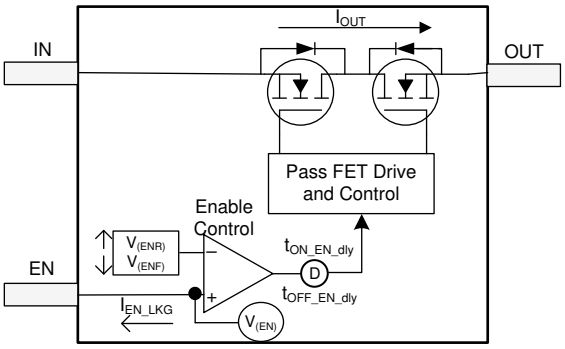

Figure 8-21. Enable Control

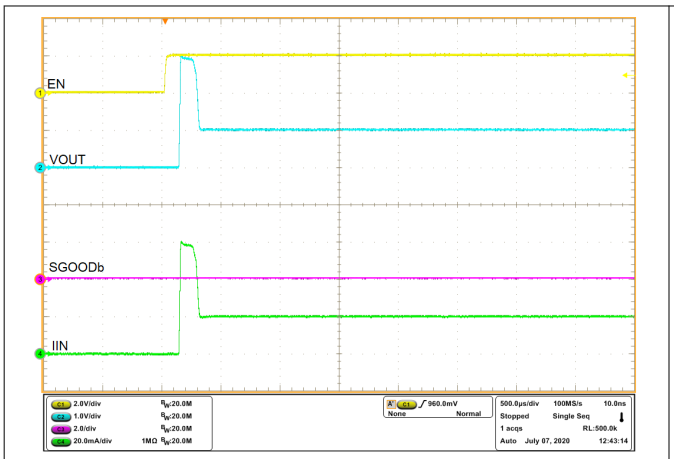

Figure 8-22. Turn-On With EN Pin

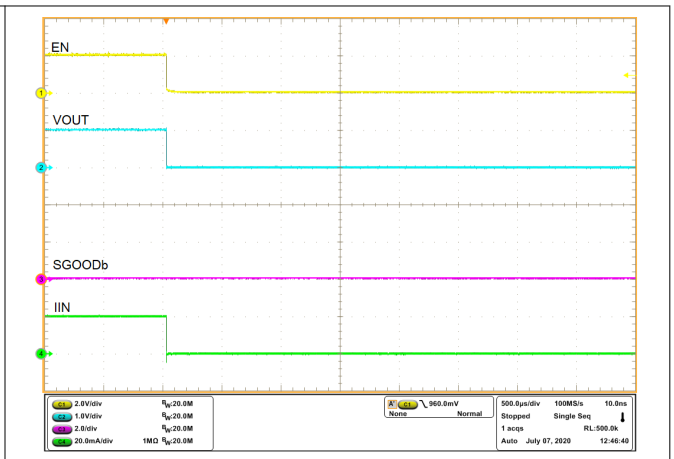

Figure 8-23. Turn-Off With EN Pin

8.3.7 Signal Good Indicator ($\overline{\text{SGOOD}}$)

The TPS2661x provides an indication of the current signal flowing through pass FETs on the $\overline{\text{SGOOD}}$ pin. Whenever the device is in normal operating condition, the $\overline{\text{SGOOD}}$ gives a signal LOW output. However in below cases when the device is outside normal operating condition, the $\overline{\text{SGOOD}}$ pin goes HIGH:

- Device current is > I_{OL} (32-mA typical)
- OUT goes outside +Vs/–Vs supply
- IN goes below –Vs supply rail (for TPS26610, TPS26611, and TPS26612 only)
- Device shuts down due to thermal limit or current limit

The $\overline{\text{SGOOD}}$ pin is also capable of driving an external LED to give a visual indication whenever the system is outside normal operating conditions.

The $\overline{\text{SGOOD}}$ pin sourcing current is derived from +Vs supply rail. For de-glitch delays in assertion and de-assertion of $\overline{\text{SGOOD}}$, see $T_{SG_Deglitch}$ in *Timing Requirements* in Specifications.

8.4 Device Functional Modes

The device can provide higher current up to 2 × I_{OL} for short durations. MODE pin of the device configures the behavior of the device for higher current. Table 8-3 and Figure 8-24 describe the device behavior in different modes for I_{OL} > 0.

With MODE = GND, the device limits the current to I_{OL} value for I_{OUT} > I_{OL}.

With MODE = OPEN, the device limits the output current as:

- For I_{OL} < I_{OUT} < 2 × I_{OL}, the device allows current up to 2 × I_{OL} for a duration of $t_{OL_Pulse_Expiry}$ and then limits the current to I_{OL} value for a duration t_{OL_Expiry}.

Copyright © 2021 Texas Instruments Incorporated

- For 2 × I_{OL} < I_{OUT} < $I_{(FASTRIP)}$, the device limits the current 2 × I_{OL} value and for a duration of $t_{OL_Pulse_Expiry}$ and then limits the current to I_{OL} value for a duration t_{OL_Expiry}.

After the completion of t_{OL_Expiry} period, the device goes into auto-retry.

With MODE = 180 kΩ, the device limits the output current as:

- For I_{OL}< I_{OUT} < 2 × I_{OL}, the device allows current up to 2 × I_{OL} for a duration of t_{OL_Extend} and then limits the current to I_{OL} value for a duration t_{OL_Expiry}.
- For 2 × I_{OL} < I_{OUT} < $I_{(FASTRIP)}$, the device limits the current 2 × I_{OL} value and for a duration of $t_{OL_Pulse_Expiry}$ and then limits the current to I_{OL} value for a duration t_{OL_Expiry}.

After the completion of t_{OL_Expiry} period, the device goes into auto-retry. If the device heats up during overload and the device temperature exceeds $T_{(TSD)}$ value, the device turns off the internal pass FETs. As the device cools down and its temperature goes below [$T_{(TSD)}$ – $T_{(TSDHyst)}$] value, the device goes into auto-retry.

Table 8-3. Device Operation Under Different MODE Configurations for I_{OL} > 0

MODE Pin Configuration	I_{OUT} < I_{OL} (32 mA)	I_{OL} (32 mA) < I_{OUT} < 2 × I_{OL} (60 mA)	2 × I_{OL} (60 mA) < I_{OUT} < $I_{(FASTRIP)}$	Auto-Retry Time
Shorted to GND	Current flows normally	Current limited to I_{OL} for a duration of t_{OL_Expiry} (100 ms). t_{OL_Expiry} (100 ms) timer starts when I_{OUT} exceeds I_{OL}.	Current limited to I_{OL} for a duration of t_{OL_Expiry} (100 ms). t_{OL_Expiry} (100 ms) timer starts when I_{OUT} exceed I_{OL}.	t_{RETRY1} (800 ms)
Open	Current flows normally	Device allows current for $t_{OL_Pulse_Expiry}$ (50 ms) time after which it is limited to I_{OL} for t_{OL_Expiry} (100 ms) time and then auto retry. $t_{OL_Pulse_Expiry}$ (50 ms) timer starts when I_{OUT} exceeds I_{OL}.	Current limited to 2 × I_{OL} for $t_{OL_Pulse_Expiry}$ (50 ms) time after which it is limited to I_{OL} for t_{OL_Expiry} (100 ms) time and then auto retry. $t_{OL_Pulse_Expiry}$ (50 ms) timer starts when I_{OUT} exceeds I_{OL}.	t_{RETRY1} (800 ms)
180 kΩ from MODE to GND	Current flows normally	Device allows current for t_{OL_Extend} (5 s) time after which it is limited to I_{OL} for t_{OL_Expiry} (100 ms) time and then auto retry. t_{OL_Extend} (5 s) timer starts when I_{OUT} exceeds I_{OL}.	Current limited to 2 × I_{OL} for $t_{OL_Pulse_Expiry}$ (50 ms) time after which it is limited to I_{OL} for t_{OL_Expiry} (100 ms) time and then auto retry. $t_{OL_Pulse_Expiry}$ (50ms) timer starts when I_{OUT} exceeds I_{OL}.	t_{RETRY2} (1.6 s)

Copyright © 2021 Texas Instruments Incorporated

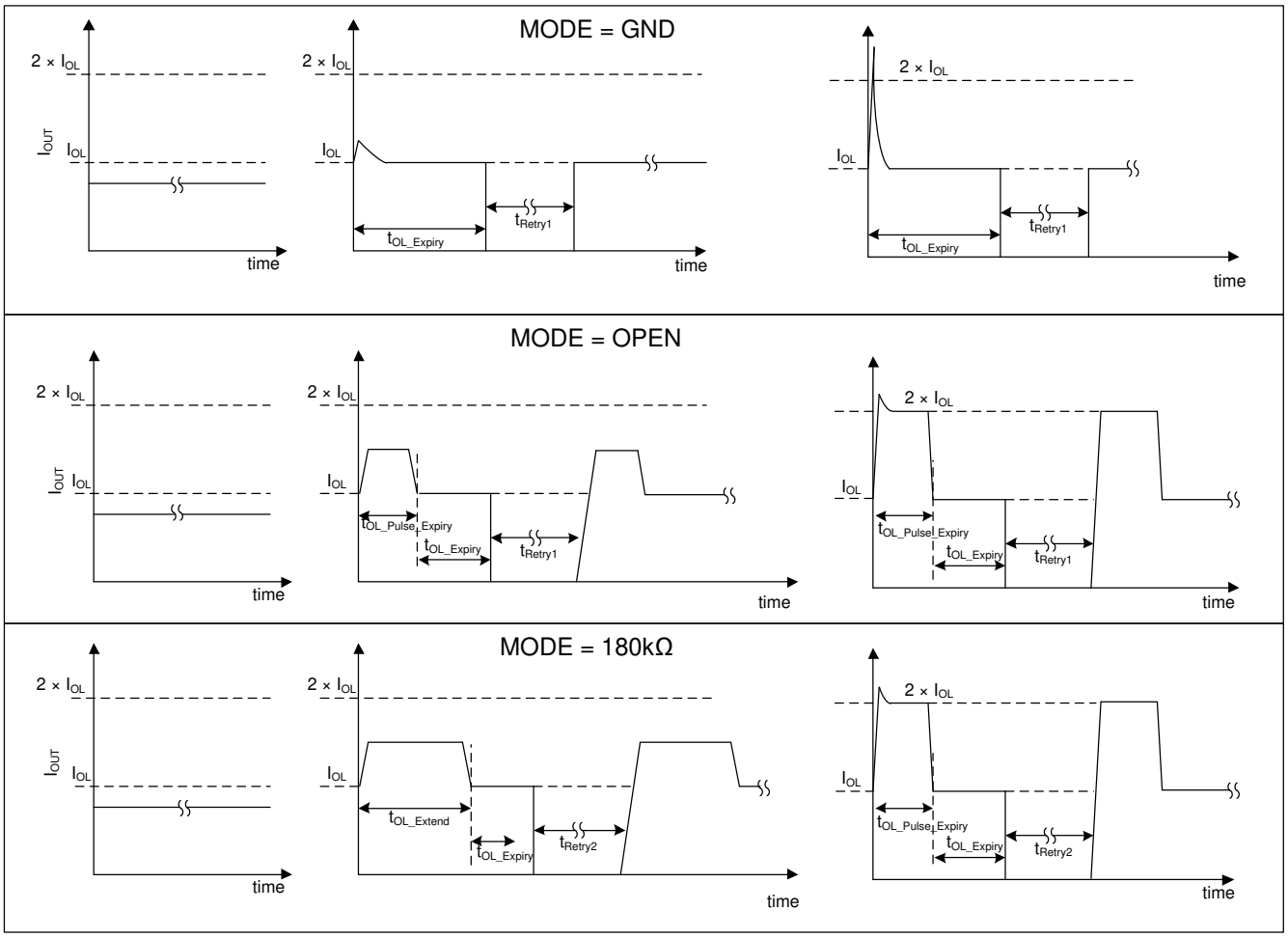

Figure 8-24. Device Operation Under Different MODE Configurations for I_{OL} > 0

Table 8-4 and Figure 8-25 describe the device behavior in different modes for I_{OL} < 0.

Table 8-4. Device Operation Under Different MODE Configurations for I_{OL} < 0

MODE Pin Configuration	I_{OUT} > –I_{OL} (–32 mA)	–2 × I_{OL}(–60 mA) < I_{OUT} < –I_{OL} (–32 mA)	–$I_{(FASTRIP)}$ < I_{OUT} < –2 × I_{OL} (–60 mA)	Auto-Retry Time
Shorted to GND or Open or 180 kΩ from MODE to GND	Current flows normally	Current limited to I_{OL} for a duration of t_{OL_Expiry} (100 ms). t_{OL_Expiry} (100 ms) timer starts when I_{OUT} exceeds I_{OL}.	Current limited to I_{OL} for a duration of t_{OL_Expiry} (100ms). t_{OL_Expiry} (100ms) timer starts when I_{OUT} exceed I_{OL}.	t_{RETRY1} (800 ms)

Copyright © 2021 Texas Instruments Incorporated

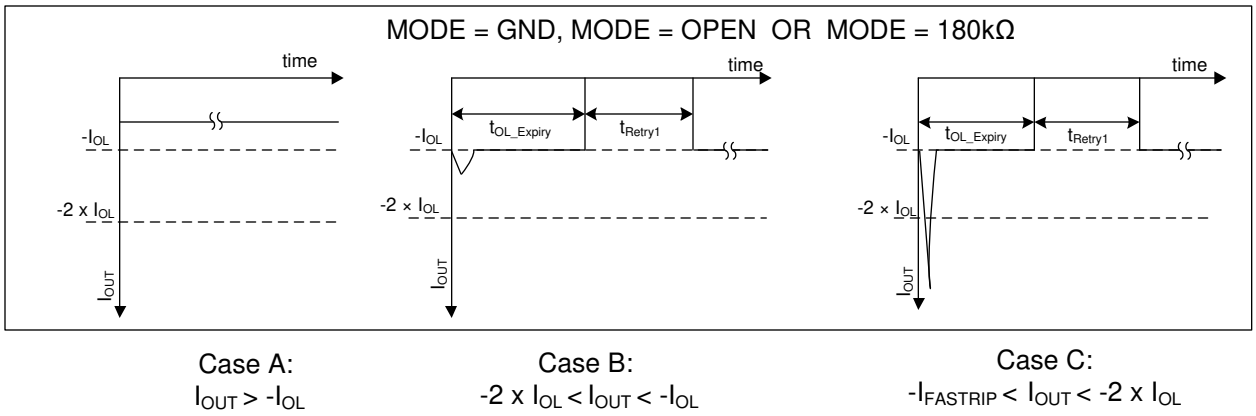

Figure 8-25. Device Operation Under Different MODE Configurations for I_{OL} < 0

9 Application and Implementation

Note

Information in the following applications sections is not part of the TI component specification, and TI does not warrant its accuracy or completeness. TI's customers are responsible for determining suitability of components for their purposes, as well as validating and testing their design implementation to confirm system functionality.

9.1 Application Information

The TPS2661x is an industrial current loop protector, providing a robust signal line protection in a wide range of industrial and automation systems. It is suitable for protection of all kinds of current loops like the 4–20-mA or ±20-mA current loops. TPS26610 is suitable for protection in current inputs whereas TPS26611 is suitable for protection in multiplexed V/I inputs.

TPS26612 is suitable for protection in power supply of two wire current transmitters. With disabled auto-retry time for first overload event, TPS26612 enables startup of power hungry transmitters requiring higher start up current for longer durations.

TPS26611 and TPS26612 devices can be also used to protect voltage outputs or digital communication signals like UART from miswiring of power supplies at these outputs. The device breaks the signal path by turning off the FETs when there is a voltage higher than supply voltage and thus keeping the system protected.

TPS2661x provides complete protection from industrial surge transients (IEC61000-4-5) and provides immunity from industrial fast transients (IEC610000-4-4) for signal lines.

9.2 Typical Application: Analog Input Protection for Current Inputs with TPS26610

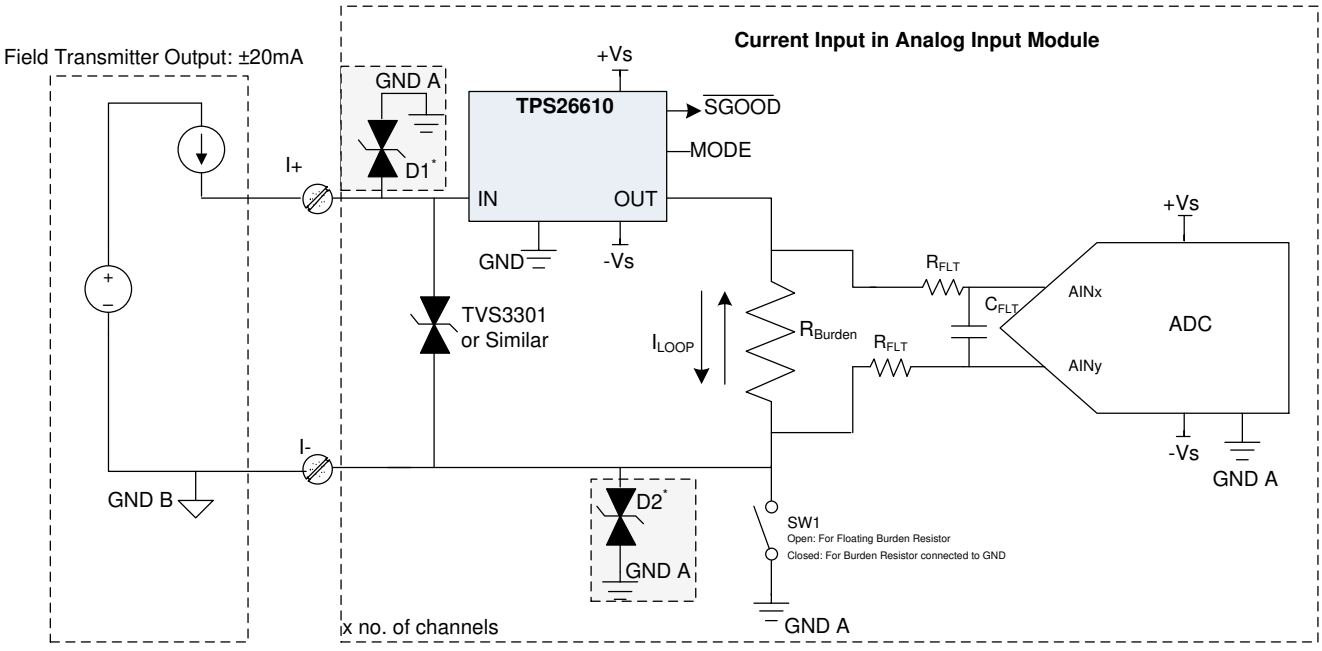

Figure 9-1. Current Input Protection in AI Module

A. TVS Diodes D1*, D2* are required for protection from surge transients (IEC61000-4-5) when burden resistor is floating (SW1 = Open).

TPS26610 can be used for protection of current inputs in an Analog Input module as shown in Figure 9-1. The current signal is measured by ADC across R_{burden}. Bipolar current limit of ±32 mA ensures that the precision burden resistor as well as the ADC front end stays well protected against any unwanted voltages or currents caused due to faulty transmitter or miswiring. High Voltage rating of IN pin of TPS26610 ensures that it also

Copyright © 2021 Texas Instruments Incorporated

protects the system from surge and EFT events as well. For reverse current blocking (OUT to IN), connect burden resistor to GND (SW1 = Closed) and used single supply (+Vs,GND) with TPS26610.

9.2.1 Design Requirements

Table 3 shows the design requirements for current input protection with TPS26610.

Table 9-1. Design Requirements

DESIGN PARAMETER		EXAMPLE VALUE
$I_{(IN)}$	Input current	±20 mA
$V_{(IN)}$	Input voltage	$–V_s$ to 50 V
$V_{(OUT)}$	Output voltage	$±V_s$
$I_{(LIM)}$	Current limit	±30 mA
R_{Burden}	Burden resistance	50 to 250 Ω

9.2.2 Detailed Design Procedure for Current Inputs with TPS26610

9.2.2.1 Selecting ±Vs Supplies for TPS26610

Select the ±Vs supplies for TPS2661x devices higher than absolute analog input voltage for ADC inputs.

TPS2661x devices have undervoltage and overvoltage protection on OUT pin and the internal FETs are turned off if OUT pin has voltage higher than +Vs or lower than –Vs.

TPS2661x devices also have undervoltage protection on IN pin and the internal FETs are turned off if IN pin has a voltage lower than –Vs. See *External Power Supply* for using unipolar or bipolar supply with TPS2661x.

9.2.2.2 Selecting R_{Burden}

The value of R_{burden} must be selected to meet the analog the input range of the ADC for the loop current range. In case of miswiring faults to field supplies, the maximum current and power dissipated in R_{burden} is decided by MODE configuration of TPS26610 device.

Table 9-2. Selection of R_{burden}

R_{burden} (Ω)	MODE Configuration	Maximum Current in R_{burden}(mA)	Maximum Power Dissipated in R_{burden} (mW)
50	MODE = GND	40	80
100	MODE = GND	40	160
250	MODE = GND	40	400
50	MODE = OPEN or 180 kΩ	70	245(1)
100	MODE = OPEN or 180 kΩ	70	490(1)
250	MODE = OPEN or 180 kΩ	70	1225(1)

(1) Power dissipated only for a pulse duration of 50 ms

9.2.2.3 Selecting MODE Configuration for TPS26610

For minimum power dissipation in burden resistor, use MODE = GND. See *Device Functional Modes* for selecting the mode configuration.

Copyright © 2021 Texas Instruments Incorporated

9.2.3 Application Performance Plots for Current Inputs with TPS26610

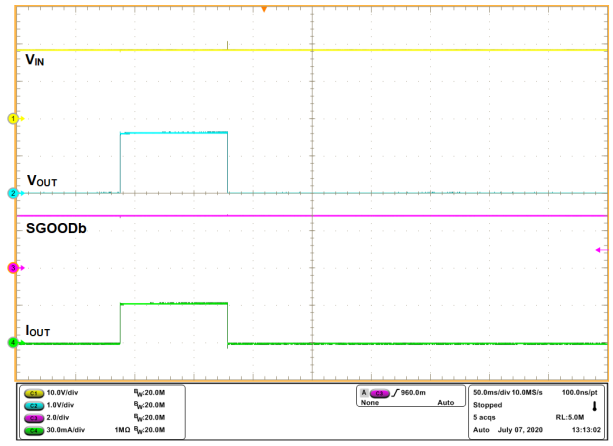

Figure 9-2. Current Limiting with MODE = GND, R_{burden} = 50 Ω

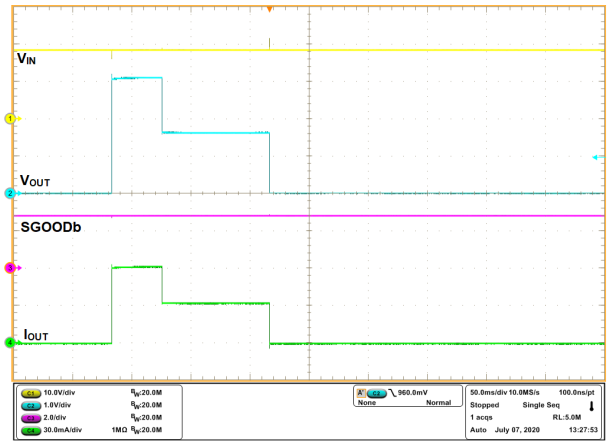

Figure 9-3. Current Limiting with MODE = OPEN, R_{burden} = 50 Ω

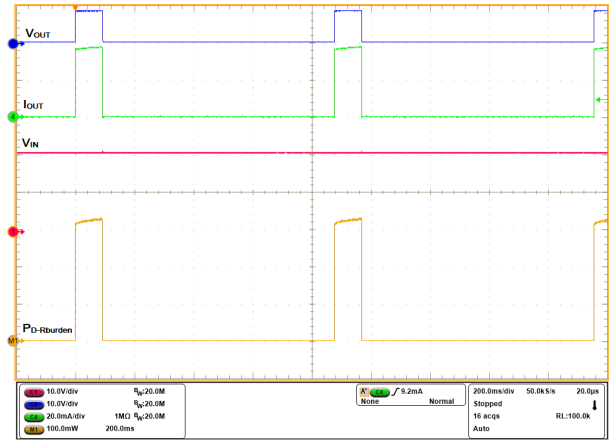

Figure 9-4. Power Dissipation in R_{burden} = 250 Ω with MODE = GND

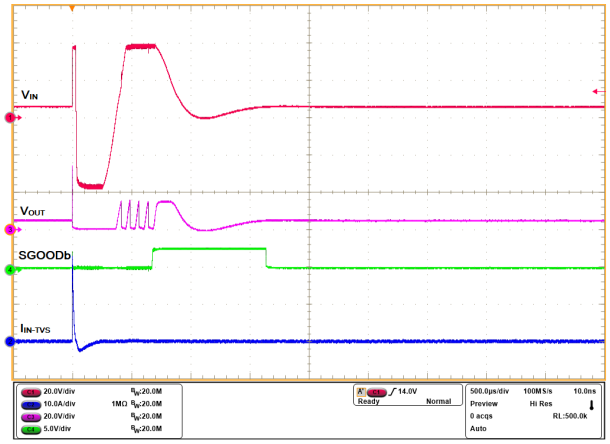

Figure 9-5. IEC61000-4-5 (+1 kV, 42 Ω) Signal Line Surge immunity with TVS3301 at IN

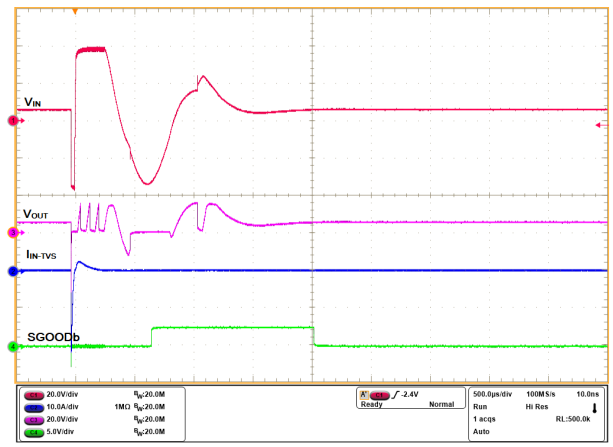

Figure 9-6. IEC61000-4-5 (–1 kV, 42 Ω) Signal Line Surge immunity with TVS3301 at IN

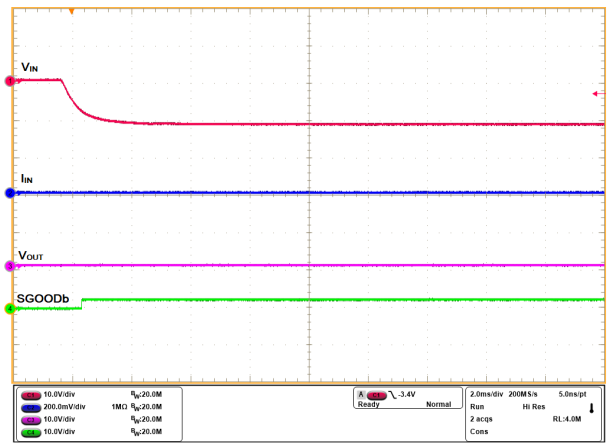

Figure 9-7. Reverse Current blocking with VIN = –12 V, $–V_S$ = GND and SW1 = Closed

Copyright © 2021 Texas Instruments Incorporated

9.3 Typical Application: Analog Input Protection for Multiplexed Current and Voltage Inputs with TPS26611

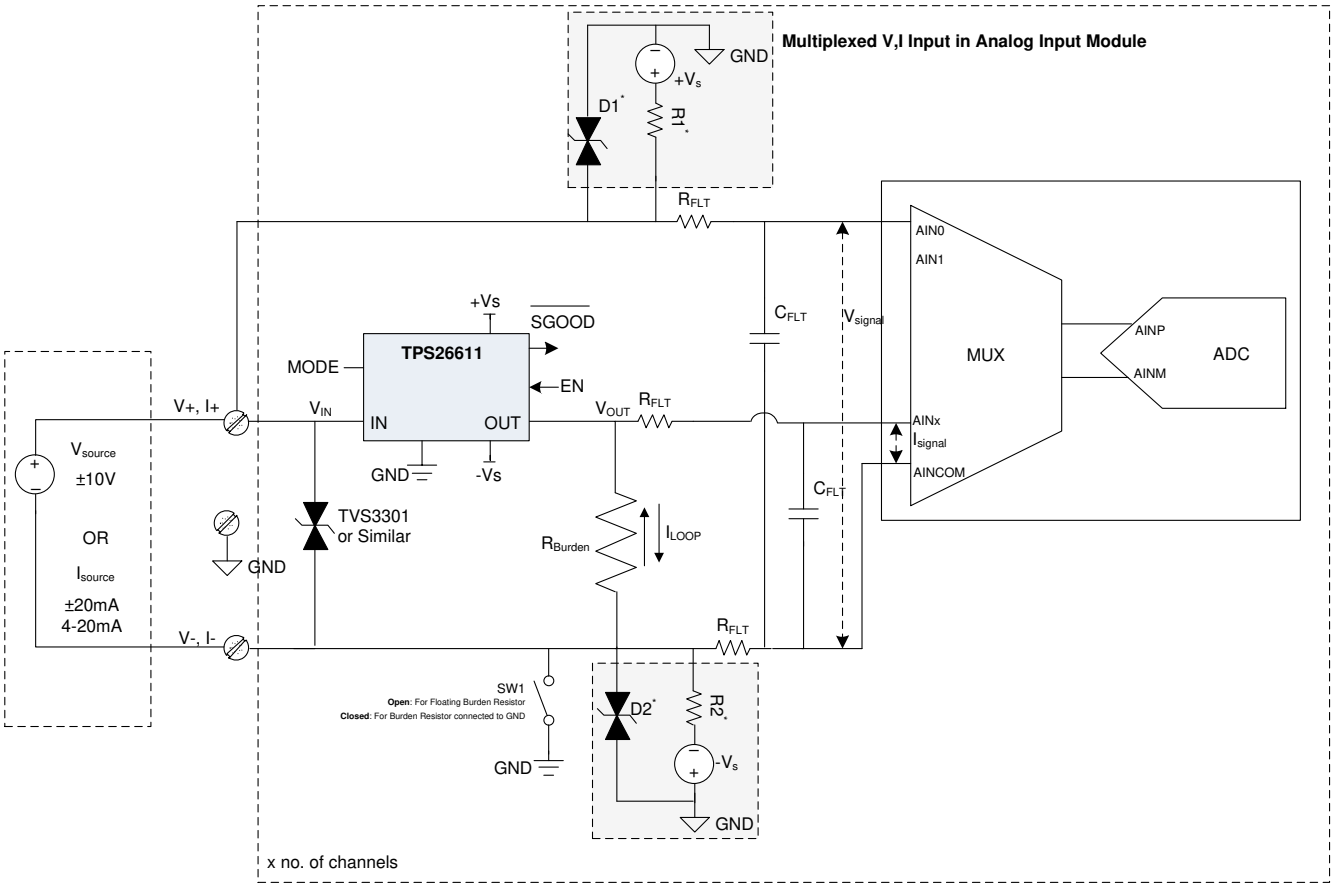

Figure 9-8. Protection for Multiplexed V/I Inputs in AI Module

A. Bias Resistors R1*, R2* are required for setting the common mode voltage for voltage input (EN = 0) when burden resistor is floating (SW1 = Open).

B. Diodes D1*, D2* are required surge protection when burden resistor is floating (SW1 = Open).

TPS26611 can be used for protection of multiplexed inputs in an Analog Input module as shown in Figure 9-8. For this configuration, connect the IN pin of TPS26611 to one channel of the ADC for voltage measurement and connect OUT pin of TPS26611 to the other channel of ADC for current measurement. EN pin of TPS26611 can be used to swtch between current and voltage measurements. With EN = 0, the internal FETs of TPS26611 are turned off and voltage signal can be measured by ADC between AIN0 and AINCOM pins. Whereas with EN = 1, the internal FETs of TPS26611 are turned on and current signal can be measured by ADC between AINx and AINCOM pins.

9.3.1 Design Requirements

Table 9-3. Design Parameters

PARAMETER	VALUE
Input Current (I_{IN})	±20 mA
Input Voltage (V_{IN})	± 10 V
Current Limit for (I_{IN})	±32 mA
R_{Burden}	50 to 250 Ω

Copyright © 2021 Texas Instruments Incorporated

9.3.2 Detailed Design Procedure for Analog Input Protection for Multiplexed Current and Voltage Inputs with TPS26611

9.3.2.1 Selecting ±V_S Supplies for TPS26611

See Vs supply selection in *Typical Application: Analog Input Protection for Current Inputs with TPS26610*.

9.3.2.2 Selecting MODE Configuration for TPS26611

For minimum power dissipation in burden resistor, use MODE = GND. See *Device Functional Modes* for selecting the mode configuration.

9.3.2.3 Selecting Bias Resistors R1, R2 for Setting Common Mode Voltage for Voltage Inputs

For setting the common mode voltage with floating burden resistor (SW1 = Open), bias resistor R1 and R2 are required.

Resistors R1, R2 provide low impedance path for off state (EN = 0) leakage currents from IN and OUT pins of TPS26611. R1, R2 are selected to keep bias current less than 4 µA through these resistors for current measurements with R_{burden} (EN = 1).

Table 9-4. Selection of Bias Resistors R1, R2

Analog Input Voltage for ADC	±V_S Supplies	Bias Current Through R1, R2	R1	R2
±10 V	±15 V	< 4 µA	1.39 to 1.66 MΩ	6.67 to 6.94 MΩ
±12.5 V	±15 V	< 4 µA	1.35 to 1.71 MΩ	6.62 to 6.98 MΩ
±15 V	±18 V	< 4 µA	1.29 to 1.75 MΩ	6.58 to 7.04 MΩ

9.3.3 Application Performance Plots for V/I Inputs with TPS26611

In addition to current limiting, reduced power dissipation in burden resistor, reverse current blocking and surge protection illustrated in *Application Performance Plots for Current Inputs with TPS26610*, TPS26611 provides enable control for selecting between voltage and current inputs.

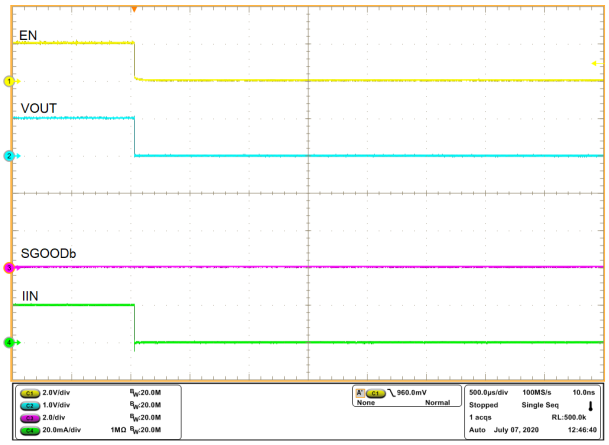

Figure 9-9. Enable Control with TPS26611 (EN = Low)

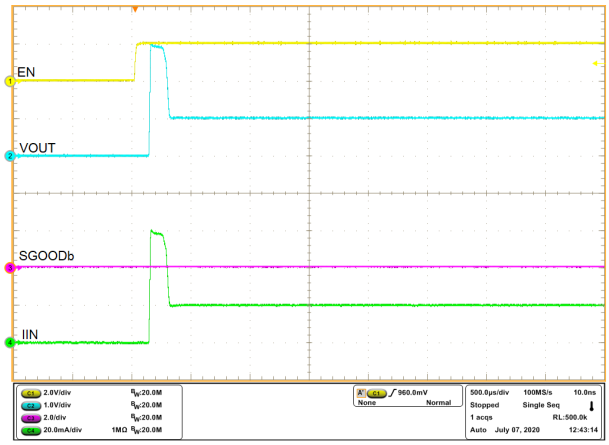

Figure 9-10. Enable Control with TPS26611 (EN = High)

Copyright © 2021 Texas Instruments Incorporated

9.4 System Examples

9.4.1 Power Supply Protection of 2-Wire Transmitter with TPS26612

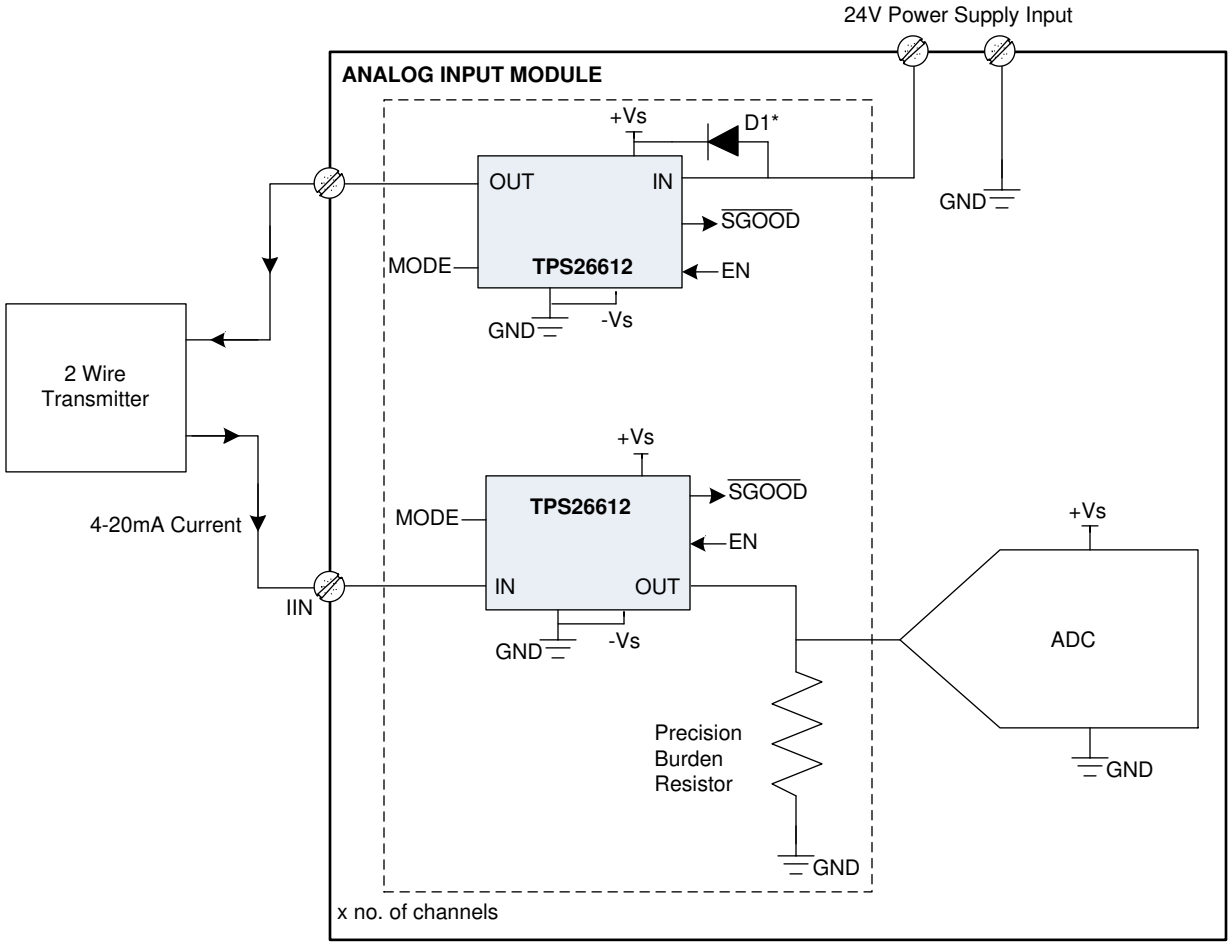

Figure 9-11. Power Supply Protection for 2-Wire Transmitter with TPS26612

TPS26612 can be used for protection of power supply powering a two wire field transmitter as shown in Figure 9-11. Connect an external signal diode (D1) from IN to +Vs pin of TPS26612 in case of external field supply to protect the system from miswiring. In case the supply is internal to the module and miswiring is not a possibility, the signal diode (D1) is not needed. TPS26612 device includes higher threshold for overvoltage protection on OUT to accommodate the voltage drop of diode (D1) between IN and +Vs.

TPS26612 has over-load expiry time (t_{OL_expiry}) disabled for the first overload fault after power-up up to a duration of t_{AR_dis} (5 sec). With overload expiry time disabled, TPS26612 is able to power up 2-wire transmitters requiring higher start-up for longer durations (up to 5 sec.). The current limit threshold (I_{OL} or 2 x I_{OL}) for startup can be selected by MODE pin.

Copyright © 2021 Texas Instruments Incorporated

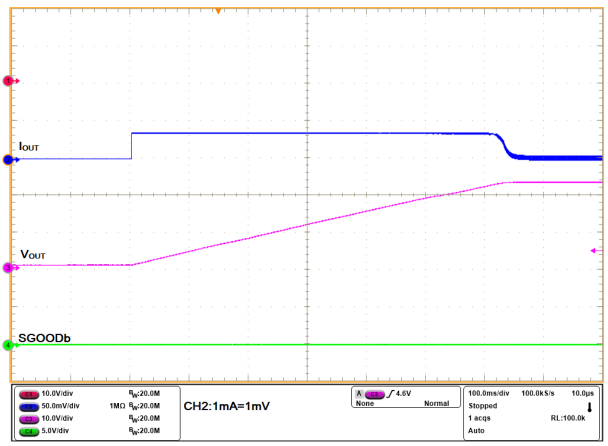

V_{IN} = 24 V, C_{OUT} = 1 mF

Figure 9-12. TPS26612: Startup of 2-Wire transmitter with MODE = GND, I_{OUT} = 30 mA

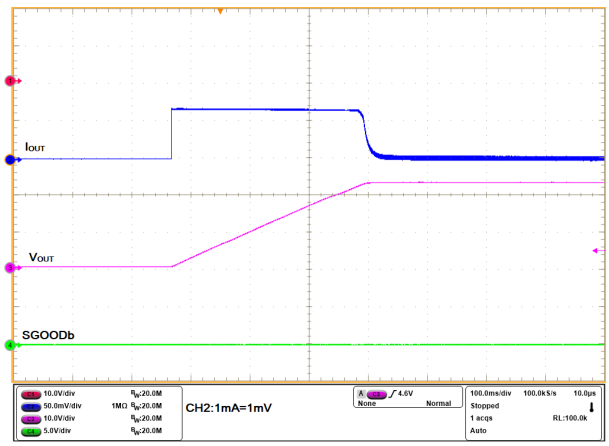

V_{IN} = 24 V, C_{OUT} = 1 mF

Figure 9-13. TPS26612: Startup of 2-Wire transmitter with MODE = Open, I_{OUT} = 60 mA

During the first overload fault, if the junction temperature reaches T_{SD}, the device turns off the internal FETs and turns on as the junction temperature goes below [T_{TSD} – $T_{TSDHyst}$].

9.4.2 Protection of 3-Wire Transmitters and Analog Output Modules With TPS26611, TPS26612

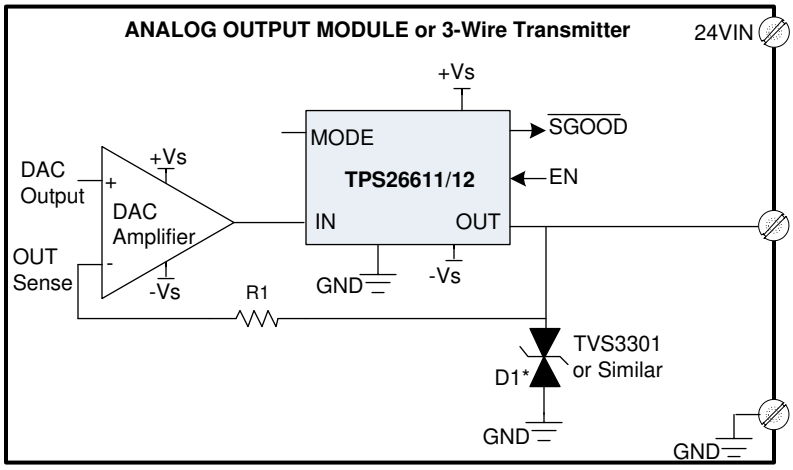

Diode (D1) is required for Signal line Surge (IEC61000-4-5) protection.

Figure 9-14. Analog Output Protection with TPS26611 or TPS26612

TPS26611 or TPS26612 can be used for protection of the analog output a 3/4-wire transmitter and analog output module against any high voltage field miswiring as shown in Figure 9-14. The OUT pin voltage is monitored with respect to the +Vs/–Vs supply voltages. If the OUT voltage goes outside the +Vs/–Vs supply rails, the FETs cutoff current conduction path and protects the whole system.The voltage at OUT pin of TPS2661x can be sensed by DAC amplifier to compensate for R_{ON} of TPS2661x

Copyright © 2021 Texas Instruments Incorporated

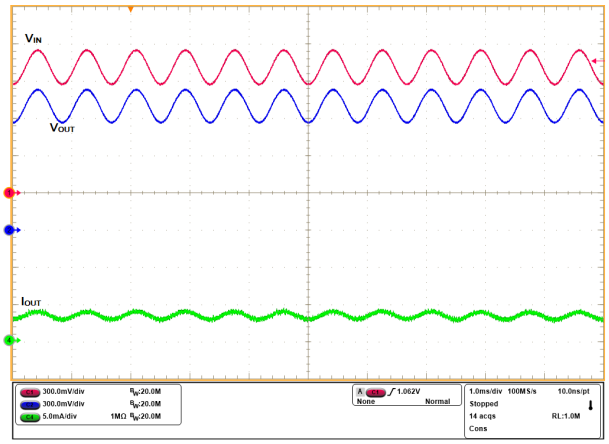

Figure 9-15. 1.2-kHz HART Signal Through TPS2661x with R_{OUT} = 250 Ω

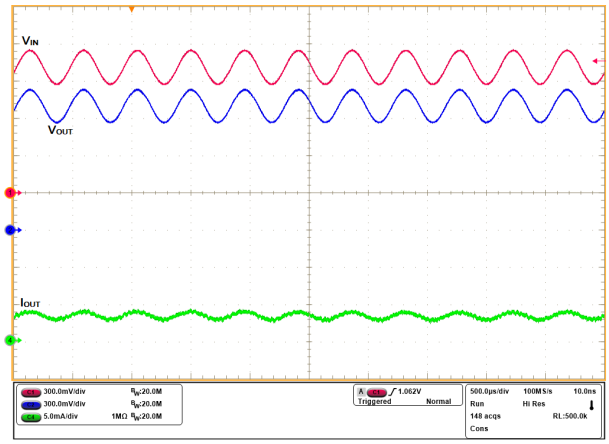

Figure 9-16. 2.2-kHz HART Signal Through TPS2661x with R_{OUT} = 250 Ω

9.4.3 UART IO Protection With TPS26611, TPS26612

TPS26611 or TPS26612 can be used for protection of UART IO lines as shown in Figure 9-17. The OUT pin voltage is monitored with respect to the +Vs/–Vs supply voltages. If the OUT voltage goes outside the +Vs/–Vs supply rails, the FETs cutoff the current conduction path and protects the whole system.

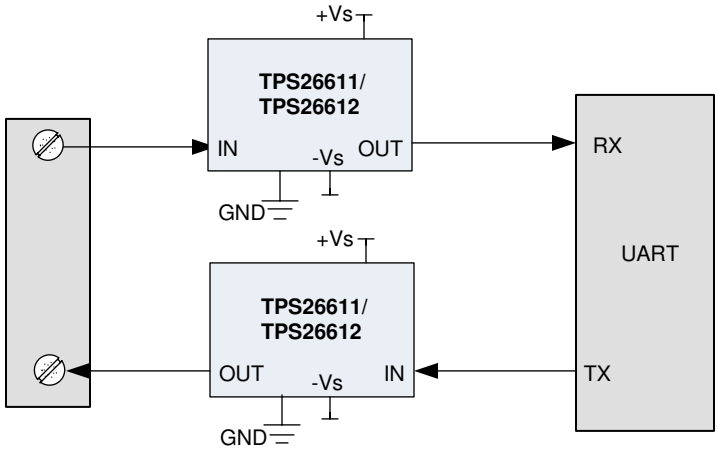

Figure 9-17. UART IO Protection

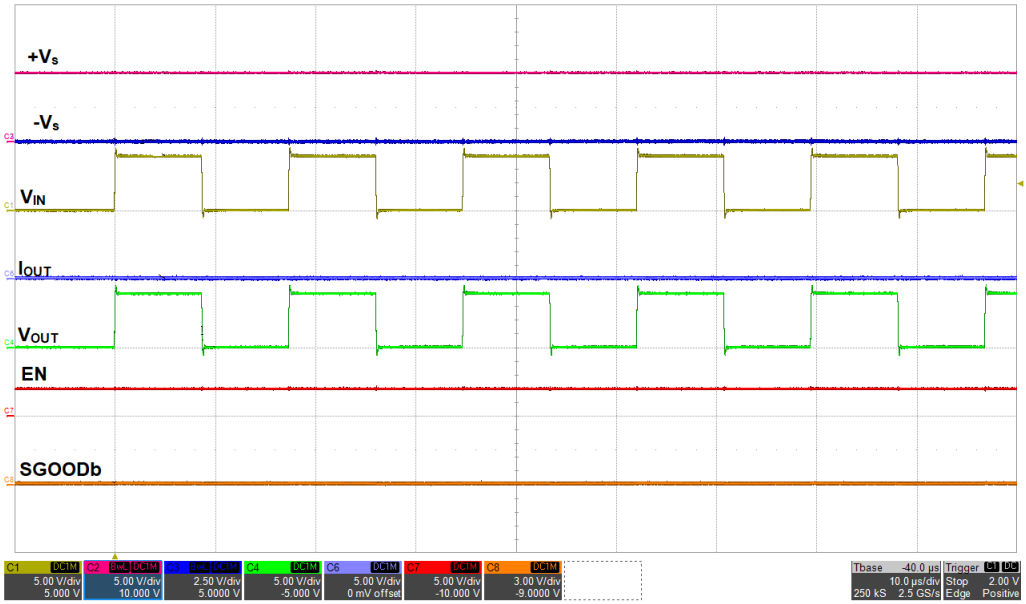

Figure 9-18. 115.2-Kbps UART Signal Through TPS2661x with V_S of 5 V

Figure 9-18 shows a UART signal of 115.2 Kbps through TPS2661x with amplitude of 4 V.

9.4.4 Higher Loop Impedance With TPS26613 and TPS26614

TPS26613 and TPS26614 devices can support higher loop impedance by providing auto-retry feature when input voltage is less than –Vs. TPS26613 and TPS26614 devices do not have UVLO protection on input and provide auto-retry for transmitter output supporting higher loop impedance. Figure 9-19 provides the behavior of TPS26613 device with input voltage less than –Vs.

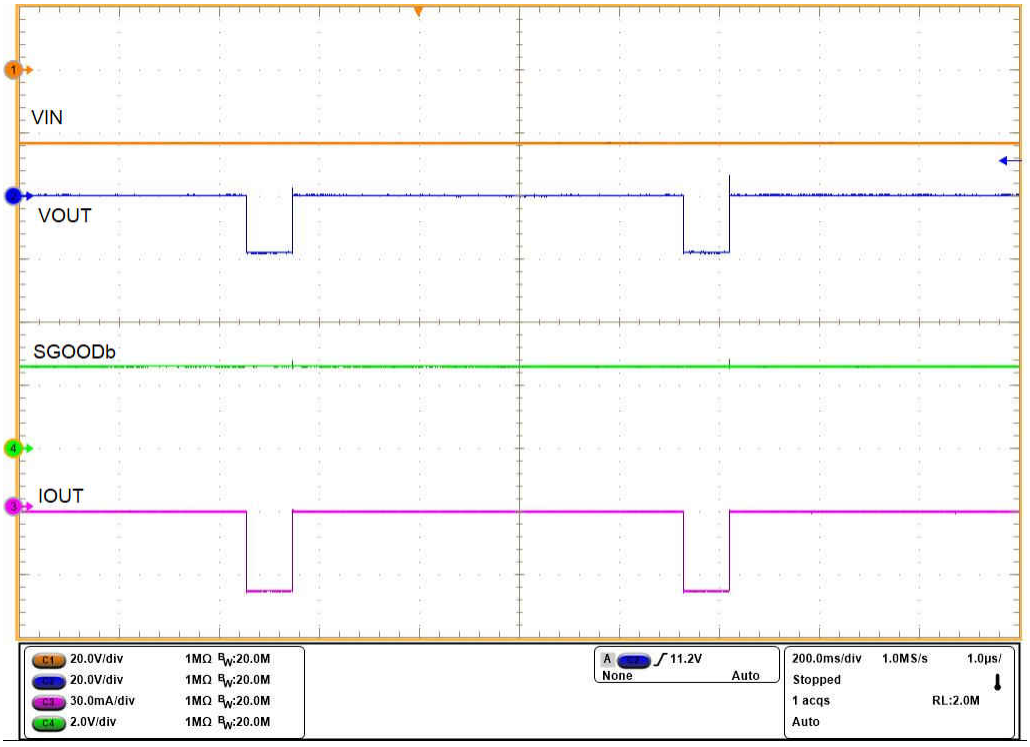

Figure 9-19. Auto-Retry in TPS26613 and TPS26614 for Vin < –Vs

Copyright © 2021 Texas Instruments Incorporated

10 Power Supply Recommendations

Table 10-1. Power Supplies for TPS2661x Devices

Device	Dual Supply (±Vs)	Single Supply (+Vs, GND)
TPS26610, TPS26611, TPS26613, TPS26614	+Vs: 2.25 V to 30 V, –Vs: –20 V to 0 V	+Vs: 3 V to 30 V, –Vs: GND
TPS26612	+Vs: 2.25 V to 30 V, –Vs: –20 V to 0 V	+Vs: 4 V to 30 V, –Vs: GND

For operation with dual supplies, TPS2661x devices need a minimum difference of 3 V between +Vs and –Vs. For reverse current blocking with single supply, see *Reverse Current Blocking for Unipolar Current Inputs (4–20 mA, 0–20 mA)*.

Copyright © 2021 Texas Instruments Incorporated

11 Layout

11.1 Layout Guidelines

- Keep the loop current power-path as short as possible.
- Place R_{MODE} resistor close to MODE and GND pins of the device.
- For protection from IEC61000-4-5 surge transients (signal lines) on input, place the TVS close to IN pin of the device.
- Place at least 100-nF ceramic capacitors close to the device if power supplies for $\pm V_s$ are far from the device.
- Connect GND pin of the device to GND of $\pm V_s$ supplies.
- Route both terminals of R_{burden} differentially to ADC inputs (AINP, AINM).
- Keep EN and $\overline{SGOOD}$ signal lines away from loop current to avoid digital noise.

11.2 Layout Example

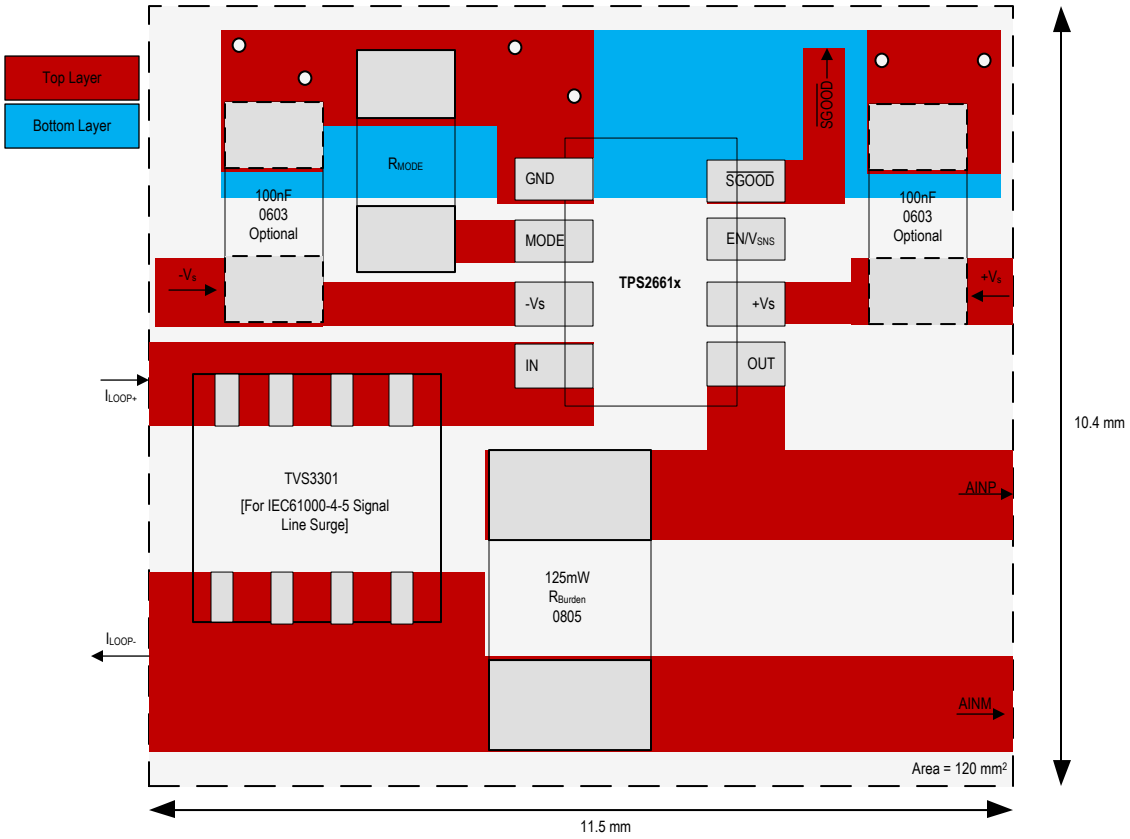

Figure 11-1. Layout Example

Copyright © 2021 Texas Instruments Incorporated

12 Device and Documentation Support

12.1 Receiving Notification of Documentation Updates

To receive notification of documentation updates, navigate to the device product folder on ti.com. Click on *Subscribe to updates* to register and receive a weekly digest of any product information that has changed. For change details, review the revision history included in any revised document.

12.2 Support Resources

TI E2E™ support forums are an engineer's go-to source for fast, verified answers and design help — straight from the experts. Search existing answers or ask your own question to get the quick design help you need.

Linked content is provided "AS IS" by the respective contributors. They do not constitute TI specifications and do not necessarily reflect TI's views; see TI's Terms of Use.

12.3 Trademarks

TI E2E™ is a trademark of Texas Instruments.
All trademarks are the property of their respective owners.

12.4 Electrostatic Discharge Caution



This integrated circuit can be damaged by ESD. Texas Instruments recommends that all integrated circuits be handled with appropriate precautions. Failure to observe proper handling and installation procedures can cause damage.

ESD damage can range from subtle performance degradation to complete device failure. Precision integrated circuits may be more susceptible to damage because very small parametric changes could cause the device not to meet its published specifications.

12.5 Glossary

TI Glossary	This glossary lists and explains terms, acronyms, and definitions.

13 Mechanical, Packaging, and Orderable Information

The following pages include mechanical, packaging, and orderable information. This information is the most current data available for the designated devices. This data is subject to change without notice and revision of this document. For browser-based versions of this data sheet, refer to the left-hand navigation.

Copyright © 2021 Texas Instruments Incorporated

PACKAGING INFORMATION

Orderable part number	Status (1)	Material type (2)	Package | Pins	Package qty | Carrier	RoHS (3)	Lead finish/ Ball material (4)	MSL rating/ Peak reflow (5)	Op temp (°C)	Part marking (6)
TPS26610DDFR	Active	Production	SOT-23-THIN (DDF) | 8	3000 | LARGE T&R	Yes	NIPDAU	Level-1-260C-UNLIM	-40 to 125	2HSF
TPS26610DDFR.A	Active	Production	SOT-23-THIN (DDF) | 8	3000 | LARGE T&R	Yes	NIPDAU	Level-1-260C-UNLIM	-40 to 125	2HSF
TPS26611DDFR	Active	Production	SOT-23-THIN (DDF) | 8	3000 | LARGE T&R	Yes	NIPDAU	Level-1-260C-UNLIM	-40 to 125	2HTF
TPS26611DDFR.A	Active	Production	SOT-23-THIN (DDF) | 8	3000 | LARGE T&R	Yes	NIPDAU	Level-1-260C-UNLIM	-40 to 125	2HTF
TPS26612DDFR	Active	Production	SOT-23-THIN (DDF) | 8	3000 | LARGE T&R	Yes	NIPDAU	Level-1-260C-UNLIM	-40 to 125	2HUF
TPS26612DDFR.A	Active	Production	SOT-23-THIN (DDF) | 8	3000 | LARGE T&R	Yes	NIPDAU	Level-1-260C-UNLIM	-40 to 125	2HUF
TPS26613DDFR	Active	Production	SOT-23-THIN (DDF) | 8	3000 | LARGE T&R	Yes	NIPDAU	Level-1-260C-UNLIM	-40 to 125	2L4F
TPS26613DDFR.A	Active	Production	SOT-23-THIN (DDF) | 8	3000 | LARGE T&R	Yes	NIPDAU	Level-1-260C-UNLIM	-40 to 125	2L4F
TPS26614DDFR	Active	Production	SOT-23-THIN (DDF) | 8	3000 | LARGE T&R	Yes	NIPDAU	Level-1-260C-UNLIM	-40 to 125	2L5F
TPS26614DDFR.A	Active	Production	SOT-23-THIN (DDF) | 8	3000 | LARGE T&R	Yes	NIPDAU	Level-1-260C-UNLIM	-40 to 125	2L5F
TPS26614DDFRG4	Active	Production	SOT-23-THIN (DDF) | 8	3000 | LARGE T&R	Yes	NIPDAU	Level-1-260C-UNLIM	-40 to 125	2L5F
TPS26614DDFRG4.A	Active	Production	SOT-23-THIN (DDF) | 8	3000 | LARGE T&R	Yes	NIPDAU	Level-1-260C-UNLIM	-40 to 125	2L5F

(1) **Status:** For more details on status, see our product life cycle.

(2) **Material type:** When designated, preproduction parts are prototypes/experimental devices, and are not yet approved or released for full production. Testing and final process, including without limitation quality assurance, reliability performance testing, and/or process qualification, may not yet be complete, and this item is subject to further changes or possible discontinuation. If available for ordering, purchases will be subject to an additional waiver at checkout, and are intended for early internal evaluation purposes only. These items are sold without warranties of any kind.

(3) **RoHS values:** Yes, No, RoHS Exempt. See the TI RoHS Statement for additional information and value definition.

(4) **Lead finish/Ball material:** Parts may have multiple material finish options. Finish options are separated by a vertical ruled line. Lead finish/Ball material values may wrap to two lines if the finish value exceeds the maximum column width.

(5) **MSL rating/Peak reflow:** The moisture sensitivity level ratings and peak solder (reflow) temperatures. In the event that a part has multiple moisture sensitivity ratings, only the lowest level per JEDEC standards is shown. Refer to the shipping label for the actual reflow temperature that will be used to mount the part to the printed circuit board.

(6) **Part marking:** There may be an additional marking, which relates to the logo, the lot trace code information, or the environmental category of the part.

Multiple part markings will be inside parentheses. Only one part marking contained in parentheses and separated by a "~" will appear on a part. If a line is indented then it is a continuation of the previous line and the two combined represent the entire part marking for that device.

Important Information and Disclaimer: The information provided on this page represents TI's knowledge and belief as of the date that it is provided. TI bases its knowledge and belief on information provided by third parties, and makes no representation or warranty as to the accuracy of such information. Efforts are underway to better integrate information from third parties. TI has taken and continues to take reasonable steps to provide representative and accurate information but may not have conducted destructive testing or chemical analysis on incoming materials and chemicals. TI and TI suppliers consider certain information to be proprietary, and thus CAS numbers and other limited information may not be available for release.

In no event shall TI's liability arising out of such information exceed the total purchase price of the TI part(s) at issue in this document sold by TI to Customer on an annual basis.

TAPE AND REEL INFORMATION

REEL DIMENSIONS

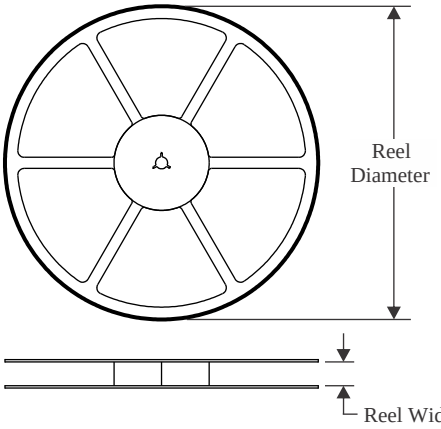

TAPE DIMENSIONS

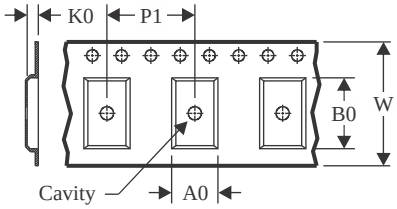

A0	Dimension designed to accommodate the component width
B0	Dimension designed to accommodate the component length
K0	Dimension designed to accommodate the component thickness
W	Overall width of the carrier tape
P1	Pitch between successive cavity centers

QUADRANT ASSIGNMENTS FOR PIN 1 ORIENTATION IN TAPE

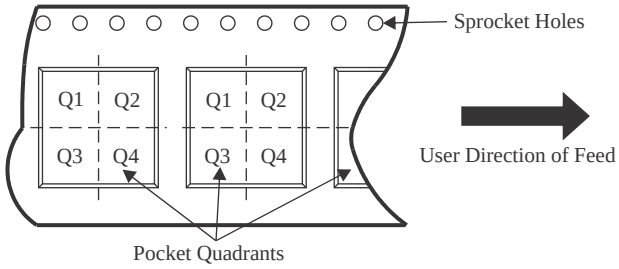

*All dimensions are nominal

Device	Package Type	Package Drawing	Pins	SPQ	Reel Diameter (mm)	Reel Width W1 (mm)	A0 (mm)	B0 (mm)	K0 (mm)	P1 (mm)	W (mm)	Pin1 Quadrant
TPS26610DDFR	SOT-23-THIN	DDF	8	3000	180.0	8.4	3.2	3.2	1.4	4.0	8.0	Q3
TPS26611DDFR	SOT-23-THIN	DDF	8	3000	180.0	8.4	3.2	3.2	1.4	4.0	8.0	Q3
TPS26612DDFR	SOT-23-THIN	DDF	8	3000	180.0	8.4	3.2	3.2	1.4	4.0	8.0	Q3
TPS26613DDFR	SOT-23-THIN	DDF	8	3000	180.0	8.4	3.2	3.2	1.4	4.0	8.0	Q3
TPS26614DDFR	SOT-23-THIN	DDF	8	3000	180.0	8.4	3.2	3.2	1.4	4.0	8.0	Q3
TPS26614DDFRG4	SOT-23-THIN	DDF	8	3000	180.0	8.4	3.2	3.2	1.4	4.0	8.0	Q3

TAPE AND REEL BOX DIMENSIONS

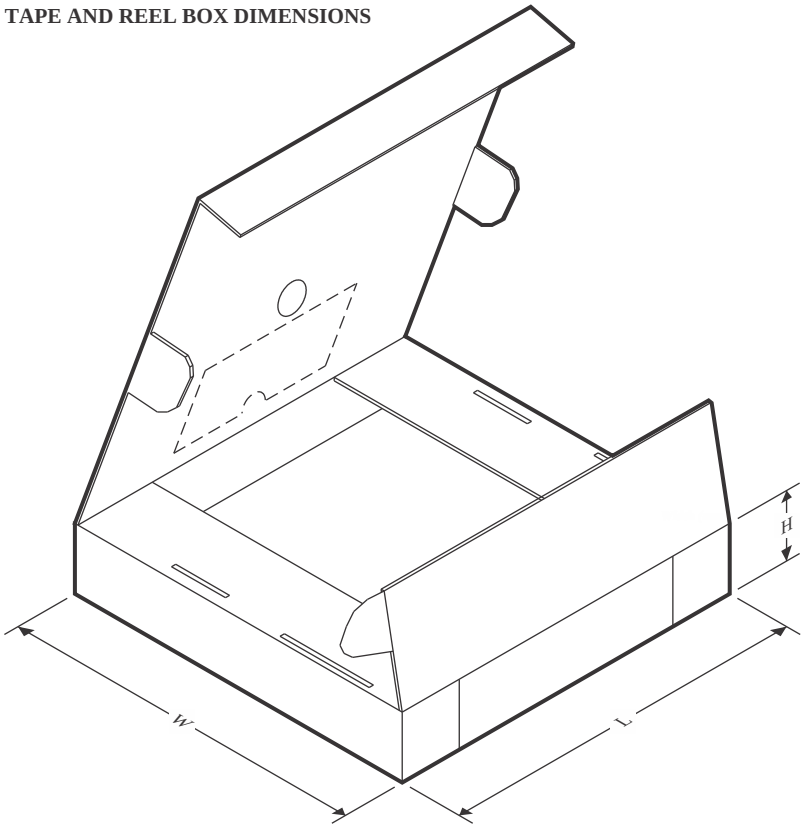

*All dimensions are nominal

Device	Package Type	Package Drawing	Pins	SPQ	Length (mm)	Width (mm)	Height (mm)
TPS26610DDFR	SOT-23-THIN	DDF	8	3000	210.0	185.0	35.0
TPS26611DDFR	SOT-23-THIN	DDF	8	3000	210.0	185.0	35.0
TPS26612DDFR	SOT-23-THIN	DDF	8	3000	210.0	185.0	35.0
TPS26613DDFR	SOT-23-THIN	DDF	8	3000	210.0	185.0	35.0
TPS26614DDFR	SOT-23-THIN	DDF	8	3000	210.0	185.0	35.0
TPS26614DDFRG4	SOT-23-THIN	DDF	8	3000	210.0	185.0	35.0

PACKAGE OUTLINE

DDF0008A

SOT-23-THIN - 1.1 mm max height

PLASTIC SMALL OUTLINE

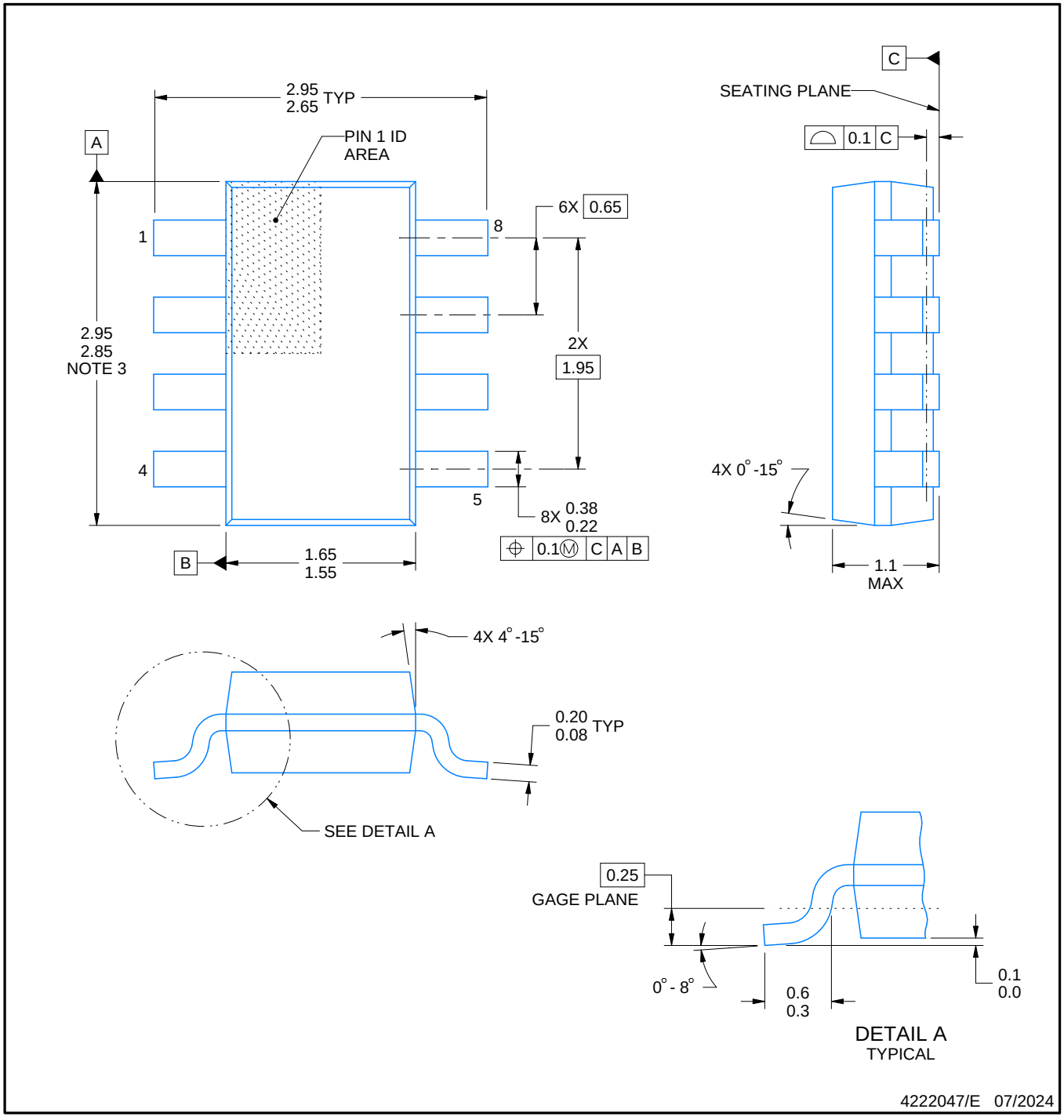

NOTES:

1. All linear dimensions are in millimeters. Any dimensions in parenthesis are for reference only. Dimensioning and tolerancing per ASME Y14.5M.
2. This drawing is subject to change without notice.
3. This dimension does not include mold flash, protrusions, or gate burrs. Mold flash, protrusions, or gate burrs shall not exceed 0.15 mm per side.

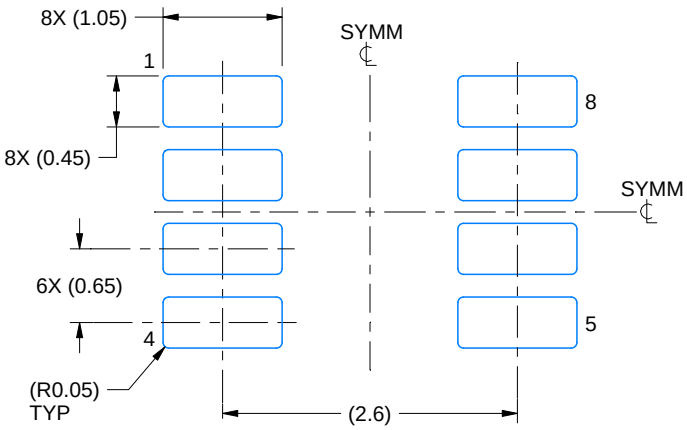

LAND PATTERN EXAMPLE
EXPOSED METAL SHOWN
SCALE:15X

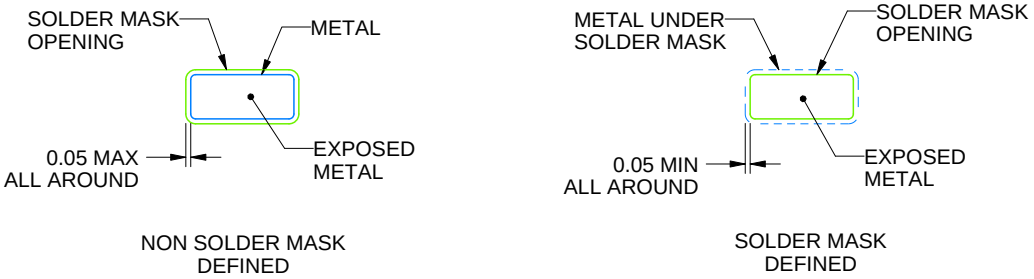

SOLDER MASK DETAILS

4222047/E 07/2024

NOTES: (continued)

4. Publication IPC-7351 may have alternate designs.
5. Solder mask tolerances between and around signal pads can vary based on board fabrication site.

EXAMPLE STENCIL DESIGN

DDF0008A

SOT-23-THIN - 1.1 mm max height

PLASTIC SMALL OUTLINE

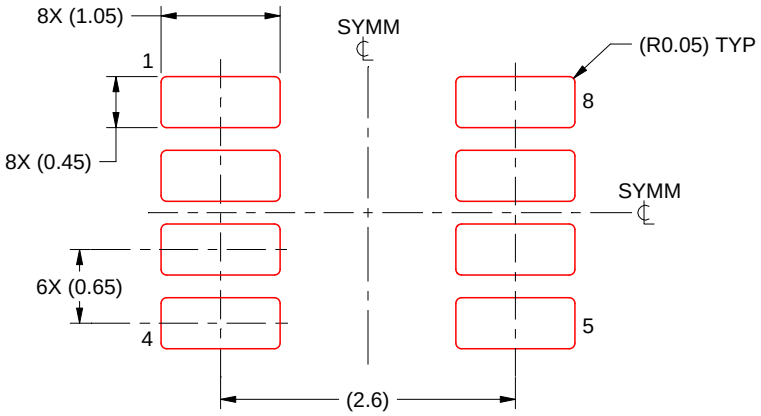

SOLDER PASTE EXAMPLE
BASED ON 0.125 mm THICK STENCIL
SCALE:15X

4222047/E 07/2024

NOTES: (continued)

6. Laser cutting apertures with trapezoidal walls and rounded corners may offer better paste release. IPC-7525 may have alternate design recommendations.
7. Board assembly site may have different recommendations for stencil design.

IMPORTANT NOTICE AND DISCLAIMER

TI PROVIDES TECHNICAL AND RELIABILITY DATA (INCLUDING DATASHEETS), DESIGN RESOURCES (INCLUDING REFERENCE DESIGNS), APPLICATION OR OTHER DESIGN ADVICE, WEB TOOLS, SAFETY INFORMATION, AND OTHER RESOURCES “AS IS” AND WITH ALL FAULTS, AND DISCLAIMS ALL WARRANTIES, EXPRESS AND IMPLIED, INCLUDING WITHOUT LIMITATION ANY IMPLIED WARRANTIES OF MERCHANTABILITY, FITNESS FOR A PARTICULAR PURPOSE OR NON-INFRINGEMENT OF THIRD PARTY INTELLECTUAL PROPERTY RIGHTS.

These resources are intended for skilled developers designing with TI products. You are solely responsible for (1) selecting the appropriate TI products for your application, (2) designing, validating and testing your application, and (3) ensuring your application meets applicable standards, and any other safety, security, regulatory or other requirements.

These resources are subject to change without notice. TI grants you permission to use these resources only for development of an application that uses the TI products described in the resource. Other reproduction and display of these resources is prohibited. No license is granted to any other TI intellectual property right or to any third party intellectual property right. TI disclaims responsibility for, and you fully indemnify TI and its representatives against any claims, damages, costs, losses, and liabilities arising out of your use of these resources.

TI’s products are provided subject to TI’s Terms of Sale, TI’s General Quality Guidelines, or other applicable terms available either on ti.com or provided in conjunction with such TI products. TI’s provision of these resources does not expand or otherwise alter TI’s applicable warranties or warranty disclaimers for TI products. Unless TI explicitly designates a product as custom or customer-specified, TI products are standard, catalog, general purpose devices.

TI objects to and rejects any additional or different terms you may propose.

Copyright © 2026, Texas Instruments Incorporated

Last updated 10/2025

ENTEGRECİ

Bu belge www.entegreci.com üzerinden sunulmaktadır.

Elektronik komponent tedarikinde Entegreci

Entegreci, Eskişehir merkezli, Türkiye geneline satış yapan bir elektronik komponent mağazasıdır. Entegreler (IC), mikrodenetleyiciler, transistörler, diyotlar, pasif elemanlar, konnektörler, modüller ve geliştirme kartları tek adetten seri üretim adetlerine kadar satılır. Ürün sayfalarında güncel stok durumunu, fiyatı ve datasheet bağlantısını bulabilirsiniz.

Parça koduyla arama

Üretici parça numarasını yazın; stok ve fiyatı hemen görün.

www.entegreci.com

Ürün kategorileri

Entegreden kapasitöre tüm elektronik komponent kategorileri.

Kategorilere göz atın

Üreticiler

Aradığınız üreticinin ürünlerini tek sayfada inceleyin.

Üreticileri görün

Toplu alım ve teklif

Listede olmayan ya da yüksek adetli parçalar için teklif isteyin.

Teklif isteyin

www.entegreci.com | **destek@entegreci.com** | **0850 305 90 34**

Entegreci is an online electronic components store based in Türkiye. Search by manufacturer part number to see stock, prices and datasheets for integrated circuits, microcontrollers, transistors, passive components and connectors, or request a quote for parts that are not listed.

Bu sayfa Entegreci tarafından eklenmiştir. Belgenin önceki sayfaları asıl yayıncısına aittir ve içeriği değiştirilmemiştir; en güncel sürüm için belgenin yayıncısına başvurun.