TPS2640 42-V, 2-A eFuse with Integrated Reverse Input Polarity Protection

1 Features

- 4.2-V to 42-V operating voltage, 45-V absolute maximum
- Integrated reverse input polarity protection down to –42 V
  - Zero additional components required
- Integrated back to back MOSFETs with 150-mΩ total RON
- 0.1-A to 2.23-A adjustable current limit (±5% accuracy at 1 A)
- Load protection during surge (IEC 61000-4-5) with suitable TVS
- IMON current indicator output (±8.5% accuracy)
- Low quiescent current, 300-µA in operating, 20-µA in shutdown
- Adjustable UVLO, OVP cut off, output slew rate control
- Reverse current blocking
- Available in easy-to-use 16-pin HTSSOP and 24-pin VQFN packages
- Selectable current-limiting fault response options (auto-retry, latch off, circuit breaker modes)

2 Applications

- HMI power protection in factory automation
- Fire safety systems
- Electronic thermostats and video doorbells
- Industrial PCs
- Elevators

3 Description

The TPS26400 devices are compact, feature rich high voltage eFuses with a full suite of protection features. The wide supply input range of 4.2 to 42 V allows control of many popular DC bus voltages. The device can withstand and protect the loads from positive and negative supply voltages up to ±42 V. Integrated back to back FETs provide reverse current blocking feature making the device suitable for systems with output voltage holdup requirements during power fail and brownout conditions. Load, source and device protection are provided with many adjustable features including overcurrent, output slew rate and overvoltage, undervoltage thresholds. The internal robust protection control blocks along with the high voltage rating of the TPS26400 helps to simplify the system designs for Surge protection.

A shutdown pin provides external control for enabling and disabling the internal FETs as well as placing the device in a low current shutdown mode. For system status monitoring and downstream load control, the device provides fault and precise current monitor output. The MODE pin allows flexibility to configure the device between the three current-limiting fault responses (circuit breaker, latch off, and Auto-retry modes).

The device is available in a 5-mm × 4.4-mm 16-pin HTSSOP as well as 5-mm x 4-mm 24-pin VQFN package and are specified over a –40°C to +125°C temperature range

Device Information

PART NUMBER	PACKAGE(1)	BODY SIZE (NOM)
TPS26400	HTSSOP (16)	5.00 mm × 4.40 mm
TPS26400	VQFN (24)	5.00 mm × 4.00 mm

(1) For all available packages, see the orderable addendum at the end of the data sheet.

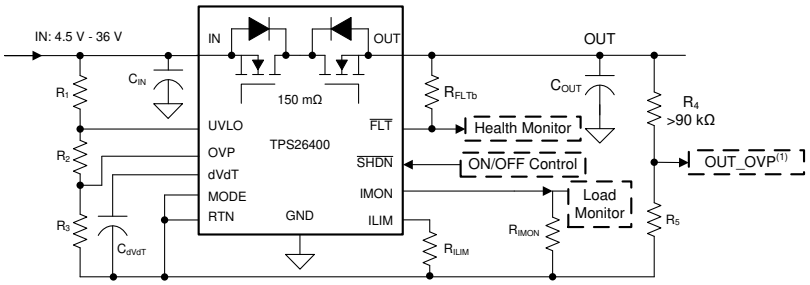

Simplified Schematic

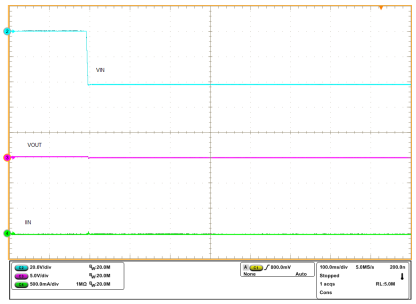

Reverse Polarity Protection with –42-V Input

An IMPORTANT NOTICE at the end of this data sheet addresses availability, warranty, changes, use in safety-critical applications, intellectual property matters and other important disclaimers. PRODUCTION DATA.

Table of Contents

1 Features....1
2 Applications....1
3 Description....1
4 Revision History....2
5 Device Comparison....3
6 Pin Configuration and Functions....3
7 Specifications....5
7.1 Absolute Maximum Ratings....5
7.2 ESD Ratings....5
7.3 Recommended Operating Conditions....5
7.4 Thermal Information....6
7.5 Electrical Characteristics....7
7.6 Timing Requirements....9
7.7 Typical Characteristics....10
8 Parameter Measurement Information....15
9 Detailed Description....16
9.1 Overview....16
9.2 Functional Block Diagram....17
9.3 Feature Description....17
9.4 Device Functional Modes....27
10 Application and Implementation....28
10.1 Application Information....28
10.2 Typical Application....28
10.3 System Examples....34
10.4 Do's and Dont's....37
11 Power Supply Recommendations....38
11.1 Transient Protection....38
12 Layout....39
12.1 Layout Guidelines....39
12.2 Layout Example....40
13 Device and Documentation Support....42
13.1 Device Support....42
13.2 Documentation Support....42
13.3 Receiving Notification of Documentation Updates....42
13.4 Support Resources....42
13.5 Trademarks....42
13.6 Electrostatic Discharge Caution....42
13.7 Glossary....42
14 Mechanical, Packaging, and Orderable Information....42

4 Revision History

NOTE: Page numbers for previous revisions may differ from page numbers in the current version.

Changes from Revision * (November 2020) to Revision A (June 2021)	Page
• Removed the "Selecting the ±Vs Supplies for TPS26610" section	28

Copyright © 2021 Texas Instruments Incorporated

5 Device Comparison

PART NUMBER	OVERVOLTAGE PROTECTION	OVER LOAD FAULT RESPONSE WITH MODE = OPEN
TPS26400	Overvoltage cut-off, adjustable	Circuit breaker with auto-retry

6 Pin Configuration and Functions

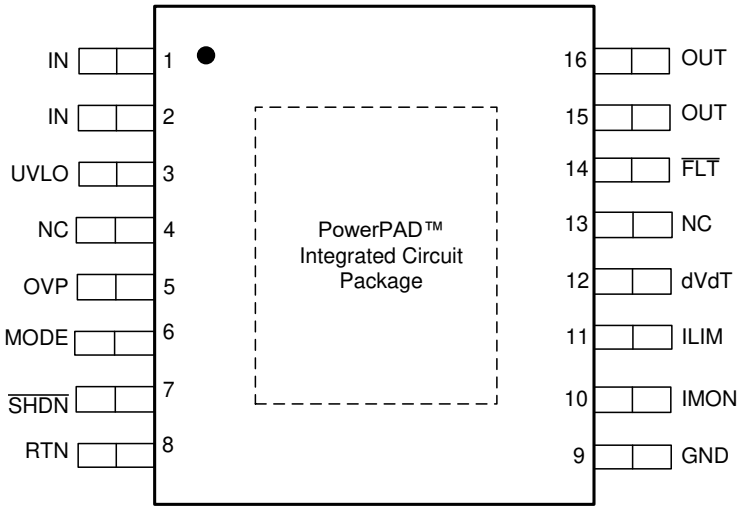

Figure 6-1. PWP Package 16-Pin HTSSOP Top View

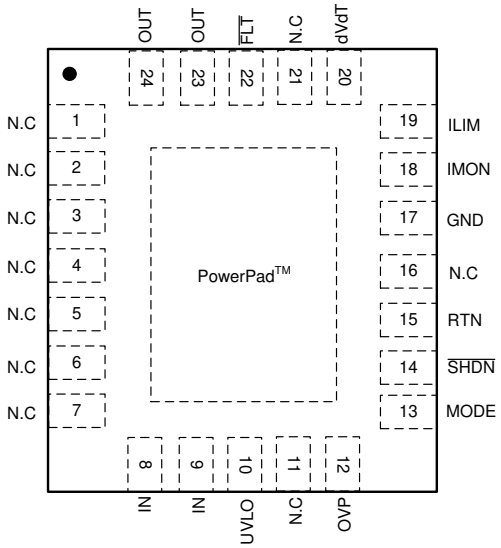

Figure 6-2. RHF Package 24-Pin VQFN Top View

Table 6-1. Pin Functions

PIN			TYPE	DESCRIPTION
NAME	TPS26400			
	HTSSOP	VQFN		
dVdT	12	20	I/O	A capacitor from this pin to RTN sets output voltage slew rate See the Hot Plug-In and In-Rush Current Control section.
$\overline{FLT}$	14	22	O	Fault event indicator. It is an open drain output. If unused, leave floating.
GND	9	17	—	Connect GND to system ground.
ILIM	11	19	I/O	A resistor from this pin to RTN sets the overload and short-circuit current limit. See the Overload and Short Circuit Protection section.
IMON	10	18	O	Analog current monitor output. This pin sources a scaled down ratio of current through the internal FET. A resistor from this pin to RTN converts current to proportional voltage. If unused, leave it floating.
IN	1	8	Power	Power input and supply voltage of the device.
	2	9		
MODE	6	13	I	Mode selection pin for over load fault response. See the Device Functional Modes section.

Copyright © 2021 Texas Instruments Incorporated

Table 6-1. Pin Functions (continued)

PIN			TYPE	DESCRIPTION
NAME	TPS26400			
	HTSSOP	VQFN		
N.C	4	1-7	—	No connect.
	13	11		
		16		
		21		
OUT	15	23	Power	Power output of the device.
	16	24		
OVP	5	12	I	Input for setting the programmable overvoltage protection threshold. An overvoltage event turns off the internal FET and asserts FLT to indicate the overvoltage fault. Connect OVP pin to RTN pin externally to select the Factory set $V_{(IN)}$ overvoltage trip level. See Overvoltage Protection (OVP) section.
PowerPadTM	—	—	—	PowerPad must be connected to RTN plane on PCB using multiple vias for enhanced thermal performance. Do not use PowerPad as the only electrical connection to RTN. For Programmable overvoltage clamp, connect the resistor ladder from Vout to OVP to RTN.
RTN	8	15	—	Reference for device internal control circuits.
$\overline{\text{SHDN}}$	7	14	I	Shutdown pin. Pulling SHDN low makes the device to enter into low power shutdown mode. Cycling SHDN pin voltage resets the device that has latched off due to a fault condition.
UVLO	3	10	I	Input for setting the programmable undervoltage lockout threshold. An undervoltage event turns off the internal FET and asserts FLT to indicate the power-failure. Connect UVLO pin to RTN pin to select the internal default threshold.

Copyright © 2021 Texas Instruments Incorporated

7 Specifications

over operating free-air temperature range (all voltages referred to GND (unless otherwise noted))(1)

7.1 Absolute Maximum Ratings

		MIN	MAX	UNIT
IN , IN-OUT	Input voltage	–45	45	V
IN , IN-OUT (10 ms transient), T_A = 25°C		–55	55	V
[IN, OUT, $\overline{FLT}$, UVLO, $\overline{SHDN}$] to RTN		–0.3	45	V
[OVP, dVdT, ILIM, IMON, MODE] to RTN		–0.3	5	V
RTN		–45	0.3	V
$I_{\overline{FLT}}$, I_{dVdT}, $I_{\overline{SHDN}}$	Sink current		10	mA
I_{dVdT}, I_{ILIM}, I_{IMON}	Source current	Internally limited		
T_J	Operating junction temperature	–40	150	°C
	Transient junction temperature	–65	$T_{(TSD)}$	°C
T_{stg}	Storage temperature	–65	150	°C

(1) Stresses beyond those listed under *absolute maximum ratings* may cause permanent damage to the device. These are stress ratings only and functional operation of the device at these or any other conditions beyond those indicated under *recommended operating conditions* is not implied. Exposure to absolute-maximum-rated conditions for extended periods may affect device reliability.

7.2 ESD Ratings

			VALUE	UNIT
$V_{(ESD)}$	Electrostatic discharge	Human-body model (HBM), per ANSI/ESDA/JEDEC JS-001(1)	±1000	V
		Charged-device model (CDM), per JEDEC specification JESD22-C101(2)	±250	

(1) JEDEC document JEP155 states that 500-V HBM allows safe manufacturing with a standard ESD control process.
(2) JEDEC document JEP157 states that 250-V CDM allows safe manufacturing with a standard ESD control process.

over operating free-air temperature range (all voltages referred to GND (unless otherwise noted))

7.3 Recommended Operating Conditions

		MIN	NOM	MAX	UNIT
IN	Input voltage	–42		42	V
UVLO, OUT, $\overline{FLT}$		0		42	
OVP, dVdT, ILIM, IMON, $\overline{SHDN}$		0		4	
ILIM	Resistance	5.36		120	kΩ
IMON		1			
IN, OUT	External capacitance	0.1			µF
dVdT		10			nF
T_J	Operating junction temperature	–40	25	125	°C

Copyright © 2021 Texas Instruments Incorporated

7.4 Thermal Information

THERMAL METRIC[1]		TPS2640		UNIT
		PWP (HTSSOP)	RHF (VQFN)	
		16 PINS	24 PINS	
$R_{\theta JA}$	Junction-to-ambient thermal resistance	38.6	30.2	°C/W
$R_{\theta JC(top)}$	Junction-to-case (top) thermal resistance	22.7	20.8	°C/W
$R_{\theta JB}$	Junction-to-board thermal resistance	18.2	7.6	°C/W
ψ_{JT}	Junction-to-top characterization parameter	0.5	0.2	°C/W
ψ_{JB}	Junction-to-board characterization parameter	18	7.6	°C/W
$R_{\theta JC(bot)}$	Junction-to-case (bottom) thermal resistance	1.5	1.7	°C/W

(1) For more information about traditional and new thermal metrics, see the *Semiconductor and IC package thermal metrics* application report.

Copyright © 2021 Texas Instruments Incorporated

7.5 Electrical Characteristics

–40°C ≤ T_A = T_J ≤ +125°C, $V_{(IN)}$ = 24 V, $V_{(\overline{SHDN})}$ = 2 V, $R_{(ILIM)}$ = 120 kΩ, IMON = $\overline{FLT}$ = OPEN, $C_{(OUT)}$ = 1 µF, $C_{(dVdT)}$ = OPEN. (All voltages referenced to GND, (unless otherwise noted))

PARAMETER		TEST CONDITIONS	MIN	TYP	MAX	UNIT
SUPPLY VOLTAGE						
$V_{(IN)}$	Operating input voltage		4.2		42	V
$V_{(PORR)}$	Internal POR threshold, rising		3.9	4	4.1	V
$V_{(PORHys)}$	Internal POR hysteresis		250	275	300	mV
$IQ_{(ON)}$	Supply current	Enabled: $V_{(\overline{SHDN})}$ = 2 V	190	300	390	µA
$IQ_{(OFF)}$		$V_{(\overline{SHDN})}$ = 0 V	11	20	33	µA
$I_{(VINR)}$	Reverse input supply current	$V_{(IN)}$ = –42 V, $V_{(OUT)}$ = 0 V			66	µA
UNDERVOLTAGE LOCKOUT (UVLO) INPUT						
$V_{(IN_UVLO)}$	Factory set $V_{(IN)}$ undervoltage trip level	$V_{(IN)}$ rising, $V_{(UVLO)}$ = 0 V	14.25	14.9	15.75	V
		$V_{(IN)}$ falling, $V_{(UVLO)}$ = 0 V	13.25	13.8	14.75	
$V_{(SEL_UVLO)}$	Internal UVLO select threshold		180	200	240	mV
$V_{(UVLOR)}$	UVLO threshold voltage, rising		1.175	1.19	1.225	V
$V_{(UVLOF)}$	UVLO threshold voltage, falling		1.08	1.1	1.125	V
$I_{(UVLO)}$	UVLO input leakage current	0 V ≤ $V_{(UVLO)}$ ≤ 42 V	–100	0	100	nA
LOW IQ SHUTDOWN ($\overline{SHDN}$) INPUT						
$V_{(\overline{SHDN})}$	Output voltage	$I_{(\overline{SHDN})}$ = 0.1 µA	2	2.7	3.4	V
$V_{(SHUTF)}$	$\overline{SHDN}$ threshold voltage for low IQ shutdown, falling		0.55	0.76	0.94	V
$I_{(\overline{SHDN})}$	Leakage current	$V_{(\overline{SHDN})}$ = 0.4 V	–10			µA
OVERVOLTAGE PROTECTION (OVP) INPUT						
$V_{(IN_OVP)}$	Factory set $V_{(IN)}$ overvoltage trip level	$V_{(IN)}$ rising, $V_{(OVP)}$ = 0 V	31	32.6	34	V
		$V_{(IN)}$ falling, $V_{(OVP)}$ = 0 V	28.5	30.3	31.5	
$V_{(SEL_OVP)}$	Internal OVP select threshold		180	200	240	mV
$V_{(OVPR)}$	Overvoltage threshold voltage, rising		1.17	1.19	1.225	V
$V_{(OVPF)}$	Overvoltage threshold, falling		1.085	1.1	1.125	V
$I_{(OVP)}$	OVP input leakage current	0 V ≤ $V_{(OVP)}$ ≤ 4 V	–100	0	100	nA
OUTPUT RAMP CONTROL (dVdT)						
$I_{(dVdT)}$	dVdT charging current	$V_{(dVdT)}$ = 0 V	4	4.7	5.5	µA
$R_{(dVdT)}$	dVdT discharging resistance	$V_{(\overline{SHDN})}$ = 0 V, with $I_{(dVdT)}$ = 10 mA sinking		14		Ω
$GAIN_{(dVdT)}$	dVdT to OUT gain	$V_{(OUT)}/V_{(dVdT)}$	23.75	24.6	25.5	V/V
CURRENT LIMIT PROGRAMMING (ILIM)						
$V_{(ILIM)}$	ILIM bias voltage			1		V
$I_{(OL)}$	Overload current limit	$R_{(ILIM)}$ = 120 kΩ, $V_{(IN)}$ – $V_{(OUT)}$ = 1 V	0.085	0.1	0.115	A
		$R_{(ILIM)}$ = 12 kΩ, $V_{(IN)}$ – $V_{(OUT)}$ = 1 V	0.95	1	1.05	
		$R_{(ILIM)}$ = 8 kΩ, $V_{(IN)}$ – $V_{(OUT)}$ = 1 V	1.425	1.5	1.575	
		$R_{(ILIM)}$ = 5.36 kΩ, $V_{(IN)}$ – $V_{(OUT)}$ = 1 V	2.11	2.23	2.35	
$I_{(OL_R\text{-}OPEN)}$		$R_{(ILIM)}$ = OPEN, open resistor current limit (single point failure test: UL60950)			0.055	
$I_{(OL_R\text{-}SHORT)}$		$R_{(ILIM)}$ = SHORT, shorted resistor current limit (single point failure test: UL60950)			0.095	
$I_{(CB)}$	Circuit breaker detection threshold	$R_{(ILIM)}$ = 120 kΩ, MODE = open	0.045	0.073	0.11	A
		$R_{(ILIM)}$ = 5.36 kΩ, MODE = open	2	2.21	2.4	

Copyright © 2021 Texas Instruments Incorporated

7.5 Electrical Characteristics

–40°C ≤ T_A = T_J ≤ +125°C, $V_{(IN)}$ = 24 V, $V_{(\overline{SHDN})}$ = 2 V, $R_{(ILIM)}$ = 120 kΩ, IMON = $\overline{FLT}$ = OPEN, $C_{(OUT)}$ = 1 µF, $C_{(dVdT)}$ = OPEN. (All voltages referenced to GND, (unless otherwise noted))

PARAMETER		TEST CONDITIONS	MIN	TYP	MAX	UNIT
$I_{(SCL)}$	Short-circuit current limit	$R_{(ILIM)}$ = 120 kΩ, $V_{(IN)}$ – $V_{(OUT)}$ = 5 V	0.08	0.1	0.12	A
		$R_{(ILIM)}$ = 8 kΩ, $V_{(IN)}$ – $V_{(OUT)}$ = 5 V	1.425	1.5	1.575	
		$R_{(ILIM)}$ = 5.36 kΩ, $V_{(IN)}$ – $V_{(OUT)}$ = 5 V	2.11	2.23	2.35	
$I_{(FASTRIP)}$	Fast-trip comparator threshold			1.87 × $I_{(OL)}$ + 0.015		A
CURRENT MONITOR OUTPUT (IMON)						
$GAIN_{(IMON)}$	Gain factor $I_{(IMON)}$: $I_{(OUT)}$	0.1 A ≤ $I_{(OUT)}$ ≤ 2 A	72	78.28	85	µA/A
PASS FET OUTPUT (OUT)						
RON	IN to OUT total ON resistance	0.1 A ≤ $I_{(OUT)}$ ≤ 2 A, T_J = 25°C	140	150	160	mΩ
		0.1 A ≤ $I_{(OUT)}$ ≤ 2 A, T_J = 85°C			210	
		0.1 A ≤ $I_{(OUT)}$ ≤ 2 A, –40°C ≤ T_J ≤ +125°C	80	150	250	
$Ilkg_{(OUT)}$	OUT leakage current in Off state	$V_{(IN)}$ = 42 V, $V(\overline{SHDN})$= 0 V, $V_{(OUT)}$ = 0 V, sourcing			12	µA
		$V_{(IN)}$ = 0 V, $V(\overline{SHDN})$= 0 V, V(OUT) = 24 V, sinking			11	
		$V_{(IN)}$ = –42 V, $V(\overline{SHDN})$= 0 V, $V_{(OUT)}$ = 0 V, sinking			50	
$V_{(REVTH)}$	$V_{(IN)}$ – $V_{(OUT)}$ threshold for reverse protection comparator, falling		–15	–10	–5	mV
V(FWDTH)	$V_{(IN)}$ – $V_{(OUT)}$ threshold for reverse protection comparator, rising		85	96	110	mV
FAULT FLAG ($\overline{FLT}$): ACTIVE LOW						
$R_{(\overline{FLT})}$	$\overline{FLT}$ pull-down resistance	$V_{(OVP)}$ = 2 V, $I_{(FLT)}$ = 5 mA sinking	40	85	160	Ω
$I_{(\overline{FLT})}$	$\overline{FLT}$ input leakage current	0 V ≤ $V_{(FLT)}$ ≤ 42 V	–200		200	nA
THERMAL SHUT DOWN (TSD)						
$T_{(TSD)}$	TSD threshold, rising			157		°C
$T_{(TSDhyst)}$	TSD hysteresis			10		°C
MODE						
MODE_SEL	Thermal fault mode selection	MODE = 402 kΩ to RTN	Current limiting with latch			
		MODE = Open	Circuit breaker mode with auto-retry			
		MODE = Short to RTN	Current limiting with auto-retry			

Copyright © 2021 Texas Instruments Incorporated

7.6 Timing Requirements

–40°C ≤ T_A = T_J ≤ +125°C, $V_{(IN)}$ = 24 V, $V_{(\overline{SHDN})}$ = 2 V, $R_{(ILIM)}$ = 120 kΩ, IMON = $\overline{FLT}$ = OPEN, $C_{(OUT)}$ = 1 µF, $C_{(dVdT)}$ = OPEN. (All voltages referenced to GND, (unless otherwise noted))

			MIN	NOM	MAX	UNIT
IN AND UVLO INPUT						
UVLO_$t_{ON(dly)}$	UVLO turnon delay	UVLO↑ (100 mV above $V_{(UVLOR)}$) to $V_{(OUT)}$ = 100 mV, C(dvdt) = open		250		µs
		UVLO↑ (100 mV above $V_{(UVLOR)}$) to $V_{(OUT)}$ = 100 mV, $C_{(dvdt)}$ ≥ 10 nF, [$C_{(dvdt)}$ in nF]		250 + 14.5 × C(dvdt)		µs
UVLO_$t_{off(dly)}$	UVLO turnoff delay	UVLO↓ (100 mV below $V_{(UVLOF)}$) to FLT↓		10		µs
SHUTDOWN CONTROL INPUT (SHDN)						
$t_{SD(dly)}$	SHUTDOWN exit delay	SHDN↑ to $V_{(OUT)}$ = 100 mV, $C_{(dvdt)}$ ≥ 10 nF, [$C_{(dvdt)}$ in nF]		250 + 14.5 × C(dvdt)		µs
		SHDN↑ to $V_{(OUT)}$ = 100 mV, $C_{(dvdt)}$ = open		250		µs
	SHUTDOWN entry delay	SHDN↓ (below $V_{(SHUTF)}$) to FLT↓		10		µs
OVER VOLTAGE PROTECTION INPUT (OVP)						
$t_{OVP(dly)}$	OVP exit delay	OVP↓ (20 mV below $V_{(OVPF)}$) to $V_{(OUT)}$ = 100 mV		200		µs
	OVP disable delay	OVP↑ (20 mV above $V_{(OVPR)}$) to FLT↓		6		µs
CURRENT LIMIT						
$t_{FASTTRIP(dly)}$	Fast-trip comparator delay	$I_{(OUT)}$ > $I_{(FASTRIP)}$		250		ns
REVERSE PROTECTION COMPARATOR						
$t_{REV(dly)}$	Reverse protection comparator delay	($V_{(IN)}$ – $V_{(OUT)}$)↓ (100-mV overdrive below $V_{(REVTH)}$) to internal FET turn OFF		1.5		µs
		($V_{(IN)}$ – $V_{(OUT)}$)↓ (10-mV overdrive below $V_{(REVTH)}$) to FLT↓		45		
$t_{FWD(dly)}$		($V_{(IN)}$ – $V_{(OUT)}$)↑ (10-mV overdrive above $V_{(FWDTH)}$) to FLT↑		70		
THERMAL SHUTDOWN						
t_{retry}	Retry delay in TSD			512		ms
OUTPUT RAMP CONTROL (dVdT)						
t_{dVdT}	Output ramp time	$\overline{SHDN}$↑ to $V_{(OUT)}$ = 23.9 V, with $C_{(dVdT)}$ = 47 nF		10		ms
		SHDN↑ to $V_{(OUT)}$ = 23.9 V, with $C_{(dVdT)}$ = open		1.6		
FAULT FLAG (FLT)						
$t_{CB(dly)}$	FLT assertion delay in circuit breaker mode	MODE = OPEN, delay from $I_{(OUT)}$ > $I_{(OL)}$ to FLT↓		4		ms
$t_{CBretry(dly)}$	Retry delay in circuit breaker mode	MODE = OPEN		540		ms
t_{PGOODF}	PGOOD delay (de-glitch) time	Falling edge		875		µs
t_{PGOODR}		Rising edge, $C_{(dVdT)}$ = open		1400		
		Rising egde, $C_{(dVdT)}$ ≥ 10 nF, [$C_{(dvdt)}$ in nF]		875 + 20 × $C_{(dVdT)}$		

Copyright © 2021 Texas Instruments Incorporated

7.7 Typical Characteristics

–40°C ≤ T_A = T_J ≤ +125°C, $V_{(IN)}$ = 24 V, $V_{(\overline{SHDN})}$= 2 V, $R_{(ILIM)}$ = 120 kΩ, IMON = $\overline{FLT}$ = OPEN, $C_{(OUT)}$ = 1 µF, $C_{(dVdT)}$ = OPEN (unless stated otherwise).

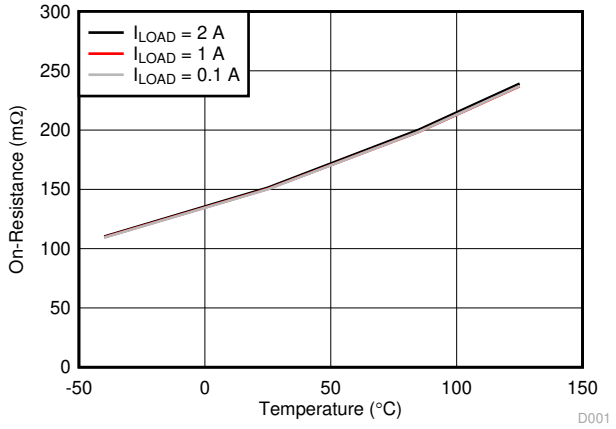

Figure 7-1. On-Resistance vs Temperature Across Load Current

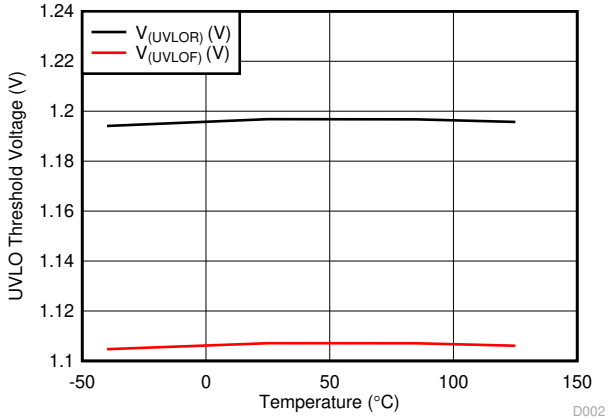

Figure 7-2. UVLO Threshold Voltage vs Temperature

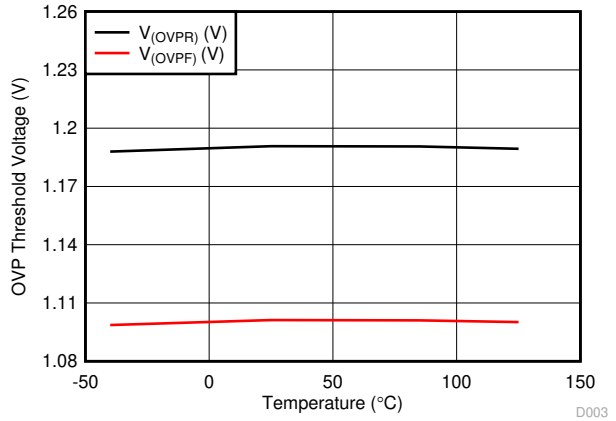

Figure 7-3. OVP Threshold Voltage vs Temperature

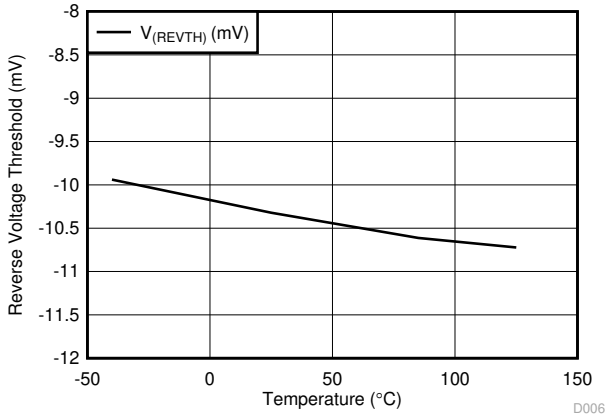

Figure 7-4. Reverse Voltage Threshold vs Temperature

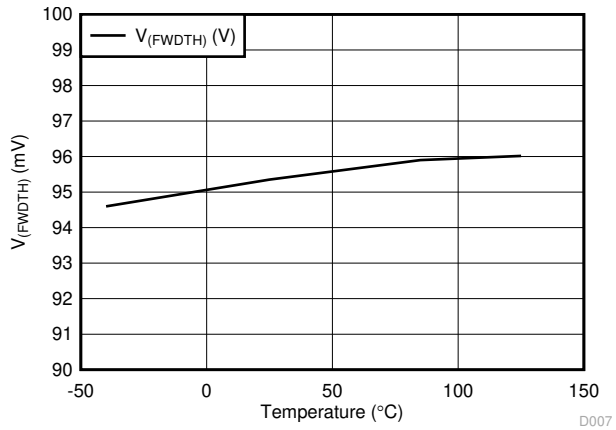

Figure 7-5. $V_{(FWDTH)}$ vs Temperature

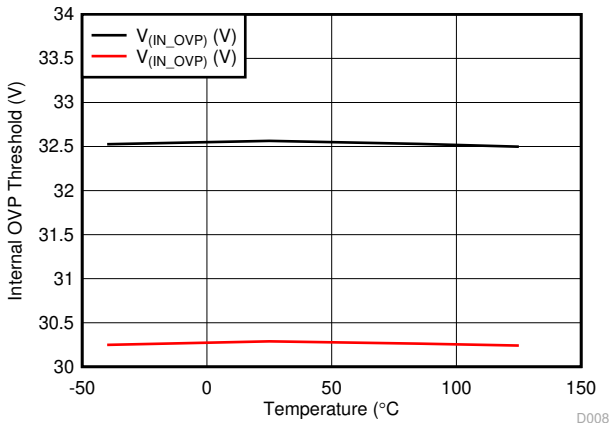

Figure 7-6. Internal OVP Threshold vs Temperature

Copyright © 2021 Texas Instruments Incorporated

7.7 Typical Characteristics (continued)

–40°C ≤ T_A = T_J ≤ +125°C, $V_{(IN)}$ = 24 V, $V_{(\overline{SHDN})}$= 2 V, $R_{(ILIM)}$ = 120 kΩ, IMON = $\overline{FLT}$ = OPEN, $C_{(OUT)}$ = 1 µF, $C_{(dVdT)}$ = OPEN (unless stated otherwise).

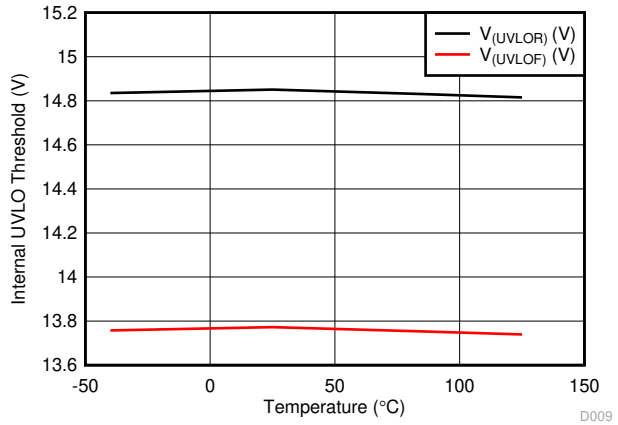

Figure 7-7. Internal UVLO Threshold vs Temperature

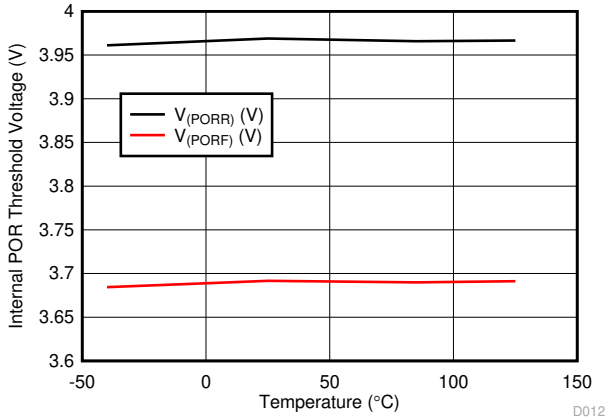

Figure 7-8. Internal POR Threshold Voltage vs Temperature

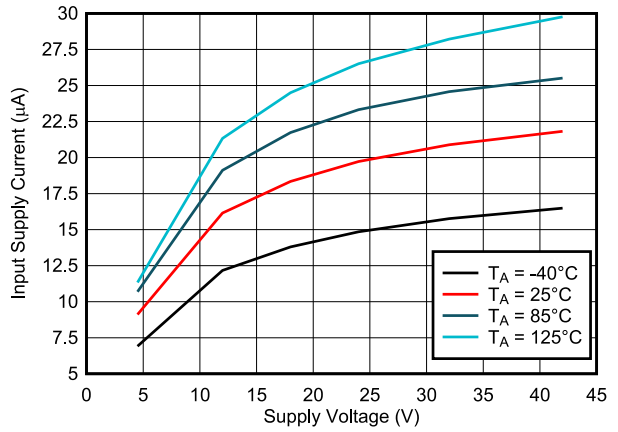

Figure 7-9. Input Supply Current vs Supply Voltage in Shutdown

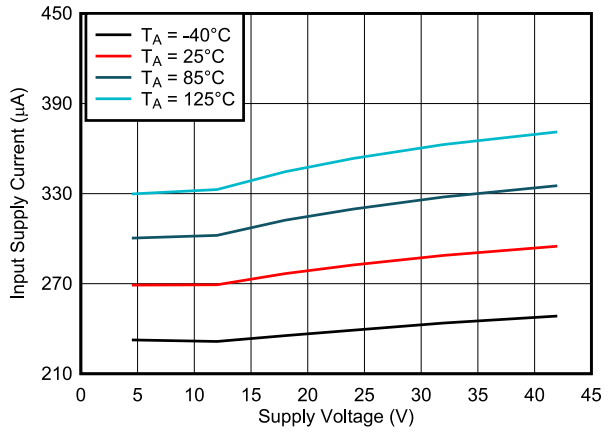

Figure 7-10. Input Supply Current vs Supply Voltage During Normal Operation

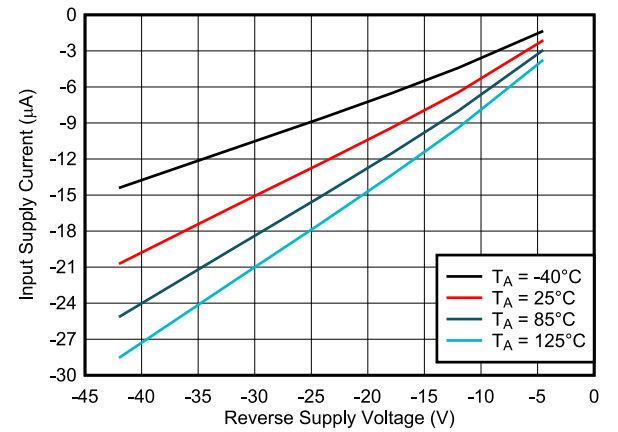

Figure 7-11. Input Supply Current vs Reverse Supply Voltage, – $V_{(IN)}$

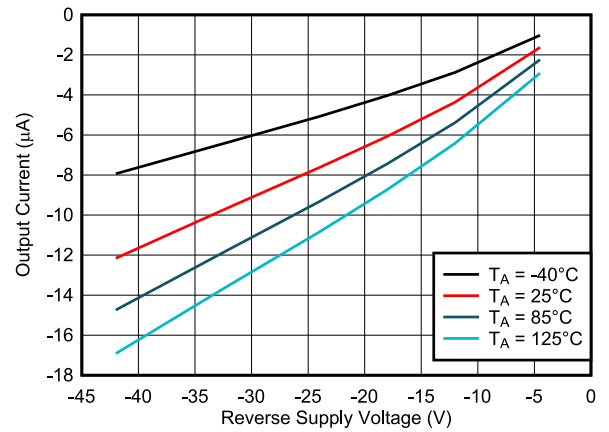

Figure 7-12. Output Current vs Reverse Supply Voltage, – $V_{(IN)}$

Copyright © 2021 Texas Instruments Incorporated

7.7 Typical Characteristics (continued)

–40°C ≤ T_A = T_J ≤ +125°C, $V_{(IN)}$ = 24 V, $V_{(\overline{SHDN})}$= 2 V, $R_{(ILIM)}$ = 120 kΩ, IMON = $\overline{FLT}$ = OPEN, $C_{(OUT)}$ = 1 µF, $C_{(dVdT)}$ = OPEN (unless stated otherwise).

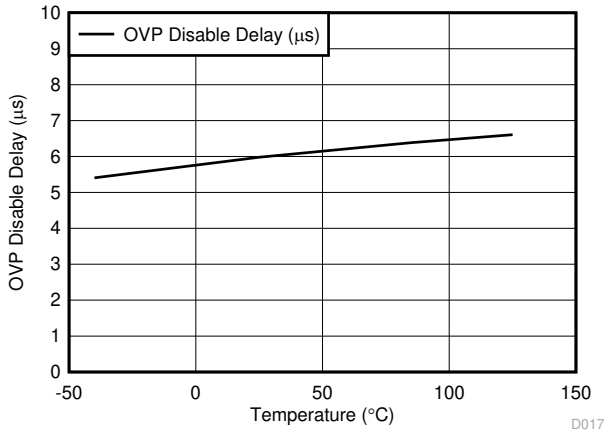

Figure 7-13. OVP Disable Delay vs Temperature

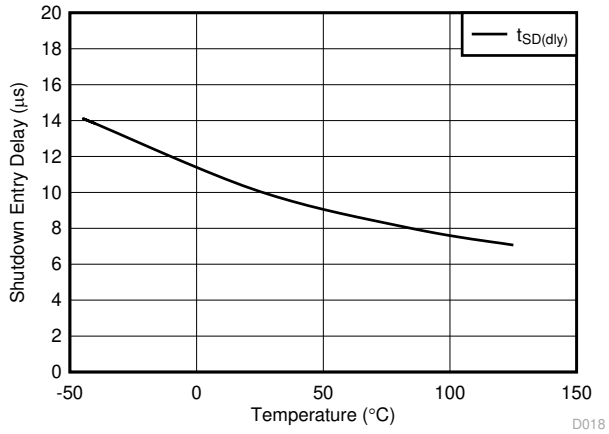

Figure 7-14. Shutdown Entry Delay vs Temperature

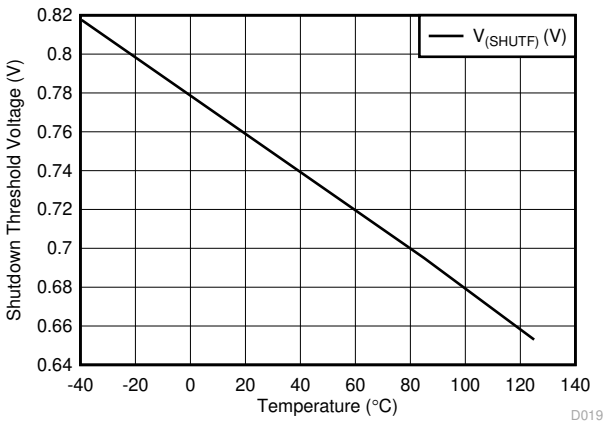

Figure 7-15. Shutdown Threshold Voltage Shutdown vs Temperature

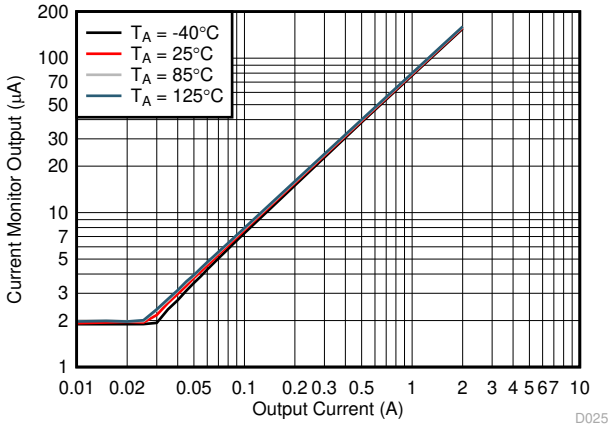

Figure 7-16. Current Monitor Output vs Output Current

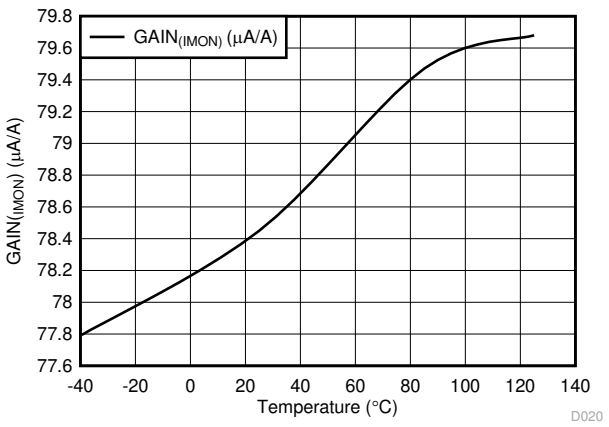

Figure 7-17. $GAIN_{(IMON)}$ vs Temperature

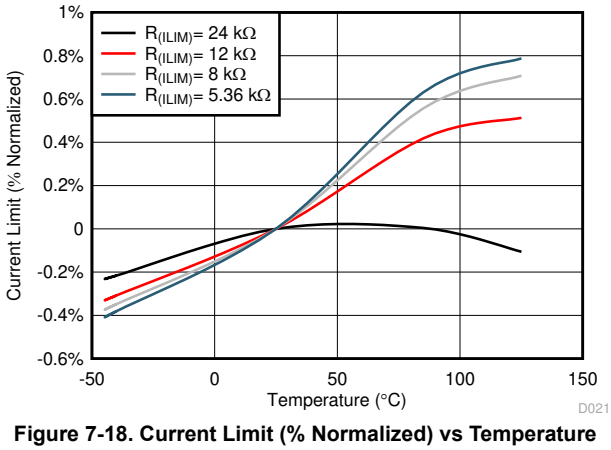

Figure 7-18. Current Limit (% Normalized) vs Temperature

Copyright © 2021 Texas Instruments Incorporated

7.7 Typical Characteristics (continued)

–40°C ≤ T_A = T_J ≤ +125°C, $V_{(IN)}$ = 24 V, $V_{(\overline{SHDN})}$= 2 V, $R_{(ILIM)}$ = 120 kΩ, IMON = $\overline{FLT}$ = OPEN, $C_{(OUT)}$ = 1 µF, $C_{(dVdT)}$ = OPEN (unless stated otherwise).

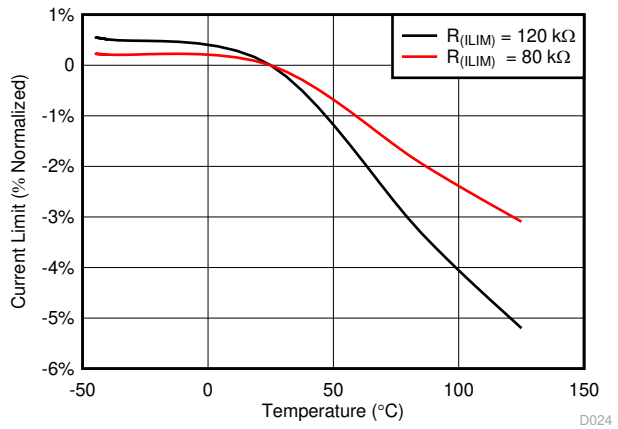

Figure 7-19. Current Limit (% Normalized) vs Temperature

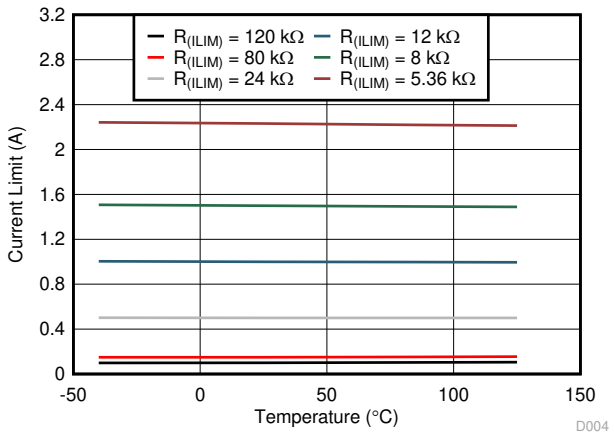

Figure 7-20. Reverse Voltage Threshold vs Temperature

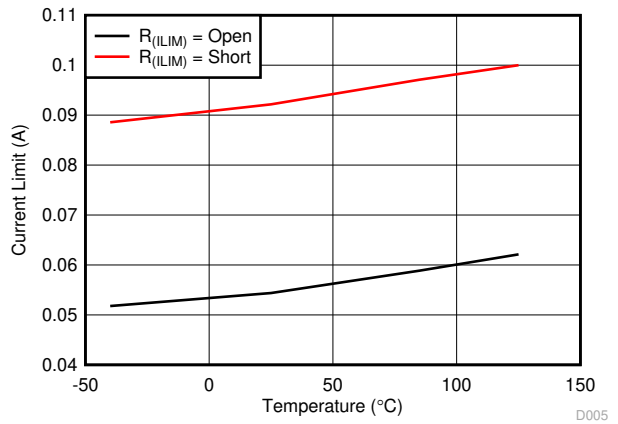

Figure 7-21. Current Limit for $R_{(ILIM)}$ = Open and Short vs Temperature

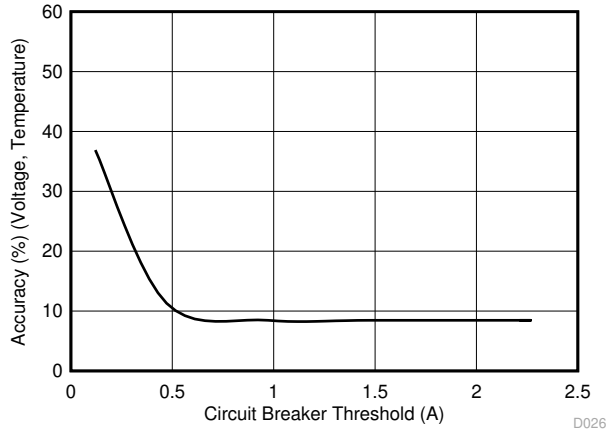

Figure 7-22. Circuit Breaker Threshold Accuracy vs Circuit Breaker Threshold $I_{(CB)}$

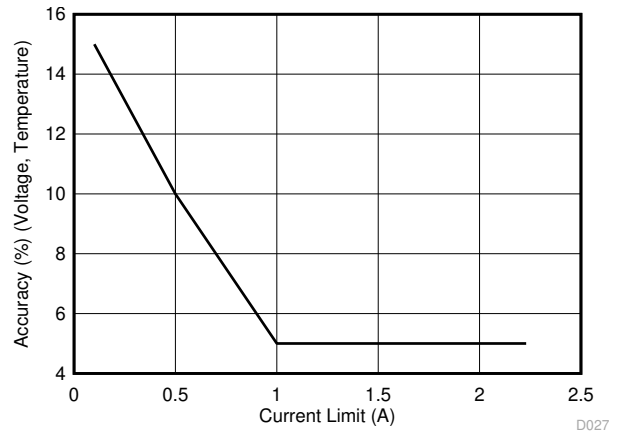

Figure 7-23. Current Limit Accuracy vs Current Limit, $I_{(OL)}$

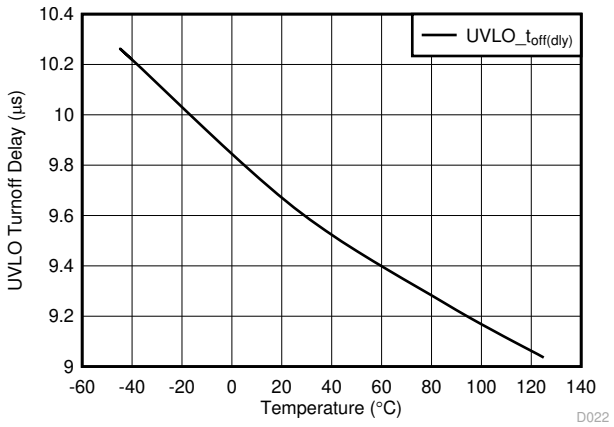

Figure 7-24. UVLO Turnoff Delay vs Temperature

Copyright © 2021 Texas Instruments Incorporated

7.7 Typical Characteristics (continued)

–40°C ≤ T_A = T_J ≤ +125°C, $V_{(IN)}$ = 24 V, $V_{(\overline{SHDN})}$= 2 V, $R_{(ILIM)}$ = 120 kΩ, IMON = $\overline{FLT}$ = OPEN, $C_{(OUT)}$ = 1 µF, $C_{(dVdT)}$ = OPEN (unless stated otherwise).

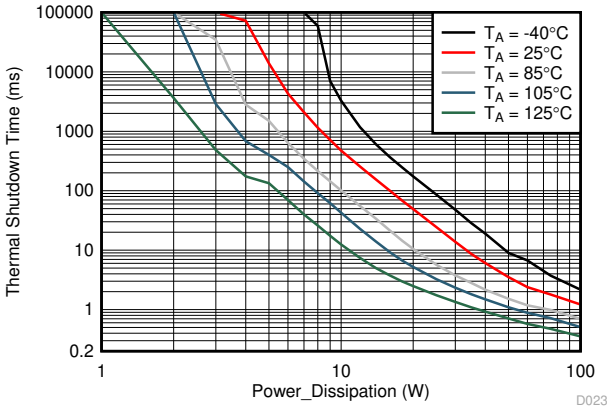

Figure 7-25. Thermal Shutdown Time vs Power Dissipation

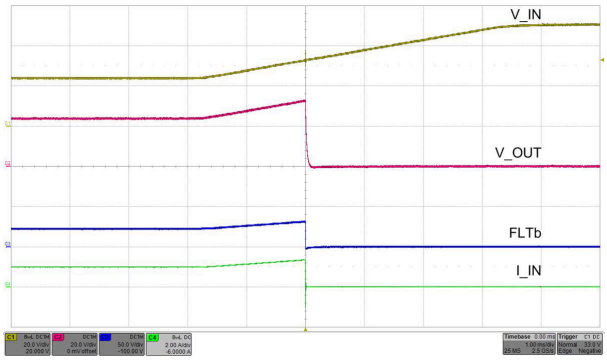

Figure 7-26. OVP Overvoltage Cut-Off Response

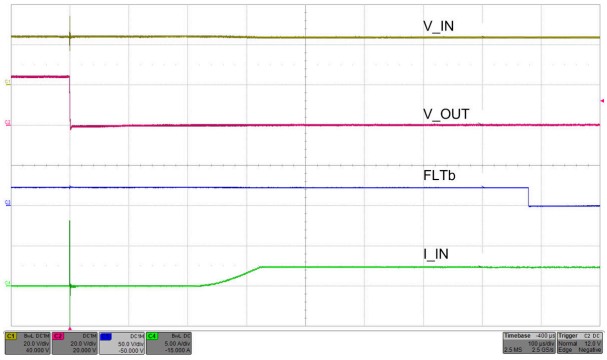

Figure 7-27. Hot-Short: Fast Trip Response and Current Regulation

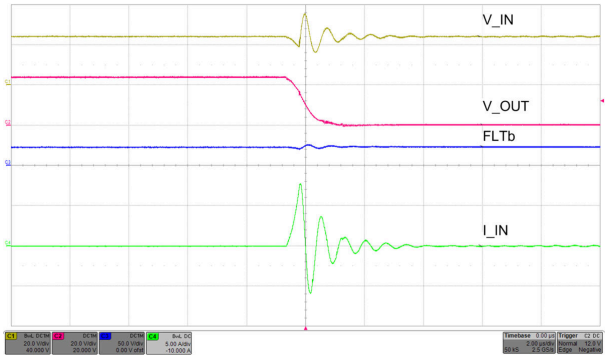

Figure 7-28. Hot-Short: Fast Trip Response (Zoomed)

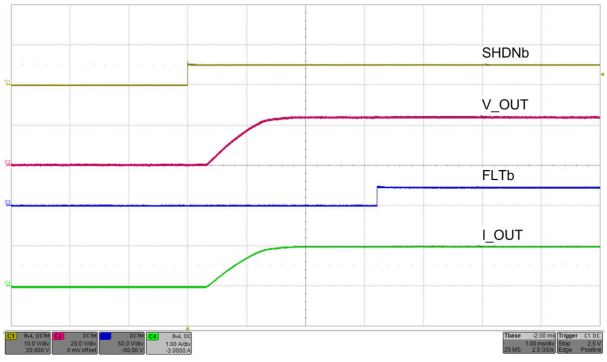

Figure 7-29. Turnon Control With $\overline{SHDN}$

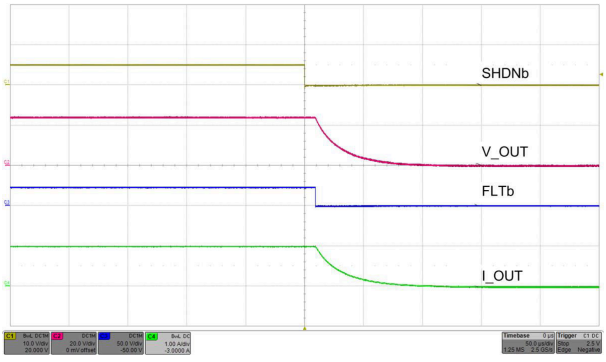

Figure 7-30. Turnoff Control With $\overline{SHDN}$

Copyright © 2021 Texas Instruments Incorporated

8 Parameter Measurement Information

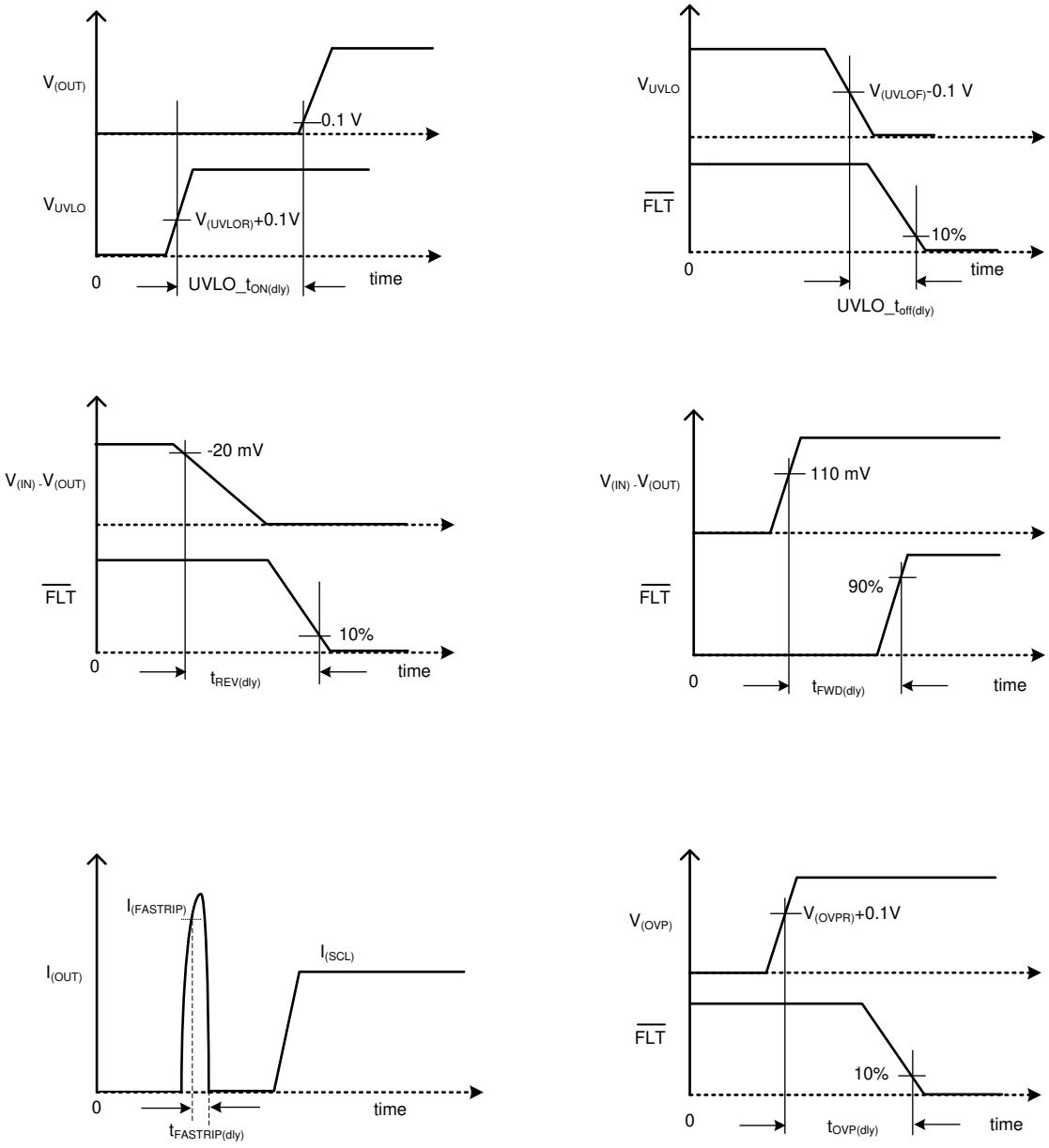

Figure 8-1. Timing Waveforms

9 Detailed Description

9.1 Overview

The TPS26400 is a high voltage industrial eFuse with integrated back-to-back MOSFETs and enhanced built-in protection circuitry. It provides robust protection for all systems and applications powered from 4.2 V to 42 V. The device can withstand ±42-V positive and negative supply voltages without damage. For hotpluggable boards, the device provides hot-swap power management with in-rush current control and programmable output voltage slew rate features. Load, source and device protections are provided with many programmable features including overcurrent, overvoltage, undervoltage. The precision overcurrent limit (±5% at 1 A) helps to minimize over design of the input power supply, while the fast response short circuit protection 250 ns (typical) immediately isolates the faulty load from the input supply when a short circuit is detected.

The internal robust protection control blocks of the TPS26400 along with its ±42-V rating helps to simplify the system designs for the surge compliance ensuring complete protection of the load and the device.

The device provides precise monitoring of voltage bus for brown-out and overvoltage conditions and asserts fault signal for the downstream system. The TPS26400 monitor functions threshold accuracy of ±3% ensures tight supervision of the supply bus, eliminating the need for a separate supply voltage supervisor chip.

The device monitors V(IN) and V(OUT) to provide true reverse current blocking when a reverse condition or input power failure condition is detected. The TPS26400 is also designed to control redundant power supply systems. A pair of TPS26400 devices can be configured for Active ORing between the main power supply and the auxiliary power supply (see the System Examples section).

Additional features of the TPS26400 include:

- Current monitor output for health monitoring of the system
- Electronic circuit breaker operation with overload timeout using MODE pin
- A choice of latch off or automatic restart mode response during current limit fault using MODE pin
- Over temperature protection to safely shutdown in the event of an overcurrent event
- De-glitched fault reporting for brown-out and overvoltage faults
- Look ahead overload current fault indication (see the Look Ahead Overload Current Fault Indicator section)

Copyright © 2021 Texas Instruments Incorporated

9.2 Functional Block Diagram

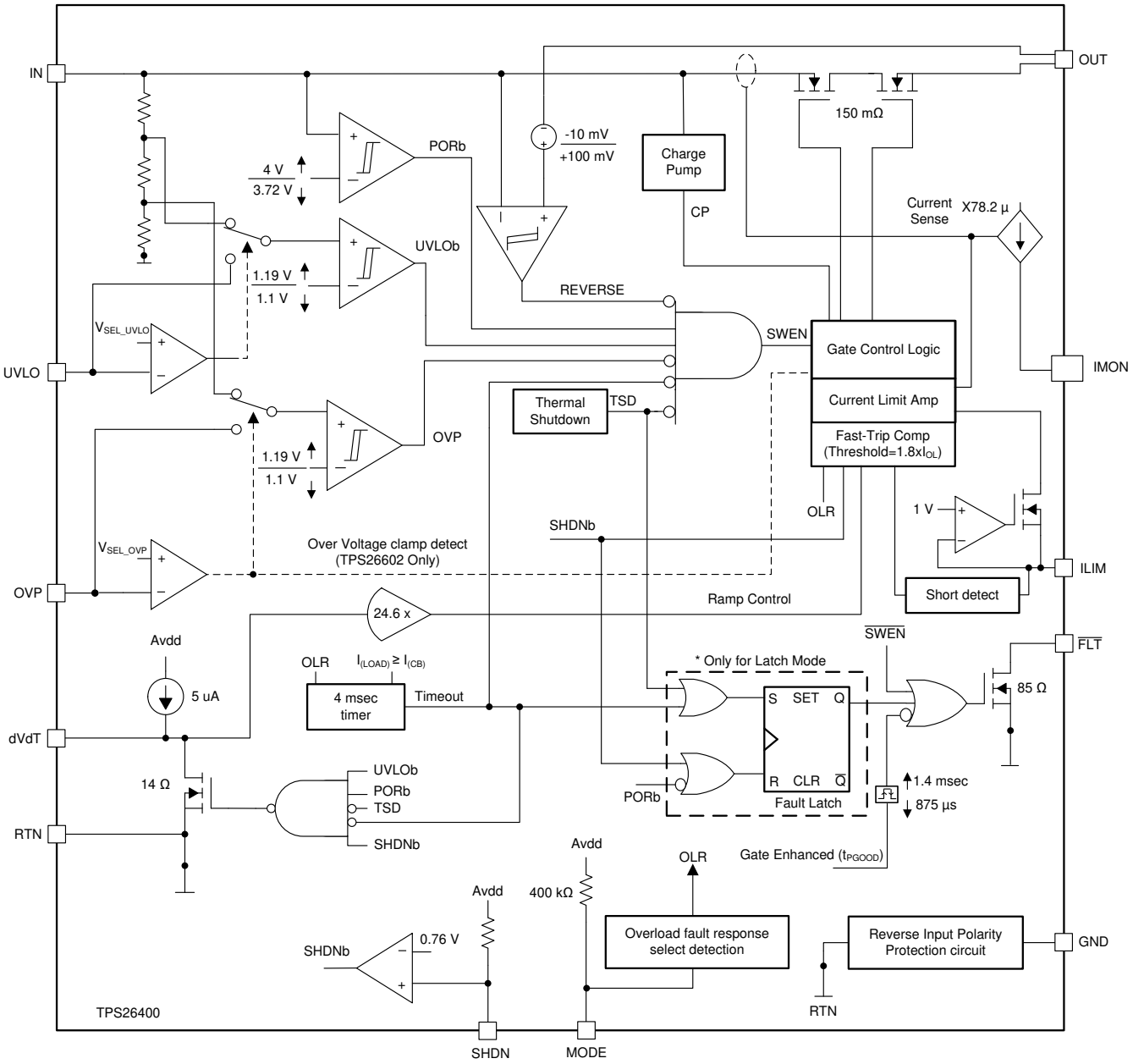

9.3 Feature Description

9.3.1 Undervoltage Lockout (UVLO)

Undervoltage comparator input. When the voltage at UVLO pin falls below $V_{(UVLOF)}$ during input power fail or input undervoltage fault, the internal FET quickly turns off and $\overline{FLT}$ is asserted. The UVLO comparator has a hysteresis of 90 mV. To set the input UVLO threshold, connect a resistor divider network from IN supply to UVLO terminal to RTN as shown in Figure 9-1.

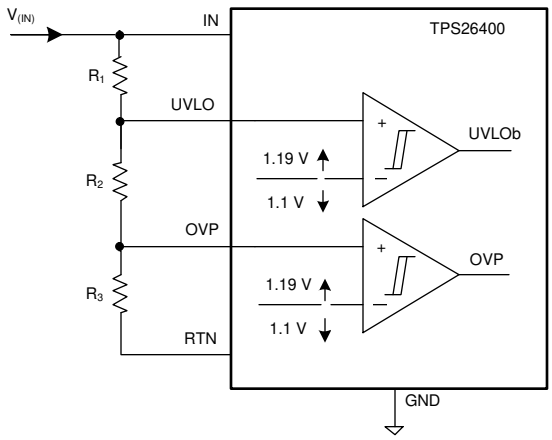

Figure 9-1. UVLO and OVP Thresholds Set by R_1, R_2 and R_3

The TPS26400 also features a factory set 15-V input supply undervoltage lockout $V_{(IN_UVLO)}$ threshold with 1-V hysteresis. This feature can be enabled by connecting the UVLO terminal directly to the RTN terminal. If the Under-Voltage Lock-Out function is not needed, the UVLO terminal must be connected to the IN terminal. UVLO terminal must not be left floating.

The device also implements an internal power ON reset (POR) function on the IN terminal. The device disables the internal circuitry when the IN terminal voltage falls below internal POR threshold $V_{(PORF)}$. The internal POR threshold has a hysteresis of 275 mV.

9.3.2 Overvoltage Protection (OVP)

The TPS26400 incorporate circuitry to protect the system during overvoltage conditions. A voltage more than $V_{(OVPR)}$ on OVP pin turns off the internal FET and protects the downstream load. To program the OVP threshold externally, connect a resistor divider from IN supply to OVP terminal to RTN as shown in Figure 9-1. The TPS26400 also feature a factory set 33-V Input overvoltage cut off $V_{(IN_OVP)}$ threshold with a 2-V hysteresis. This feature can be enabled by connecting the OVP terminal directly to the RTN terminal. Figure 7-26 illustrates the overvoltage cut-off functionality.

Programmable output overvoltage clamp can also be achieved using TPS26400 by connecting the resistor ladder

from Vout to OVP to RTN as shown in Figure 9-2 . This results in clamping of output voltage close to OVP setpoint

by resistors R4 and R5. as shown in Figure 9-3. This scheme will also help in achieving minimal system Iq

during off state. For this OVP configurataion, use R4 > 90 kΩ.

Copyright © 2021 Texas Instruments Incorporated

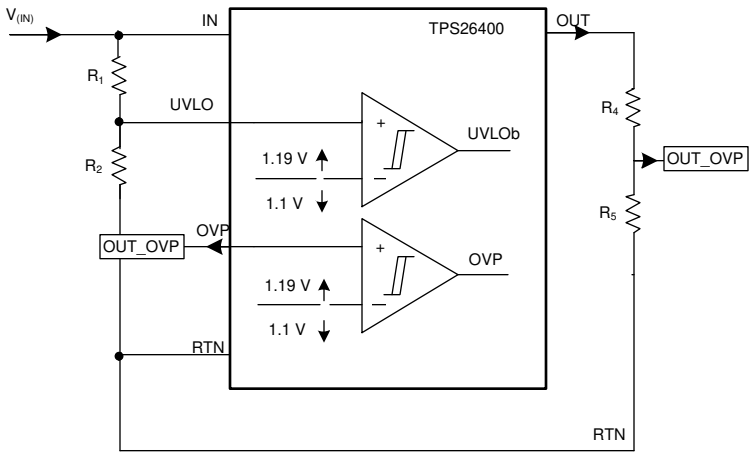

Figure 9-2. Programmable Output OV Clamp

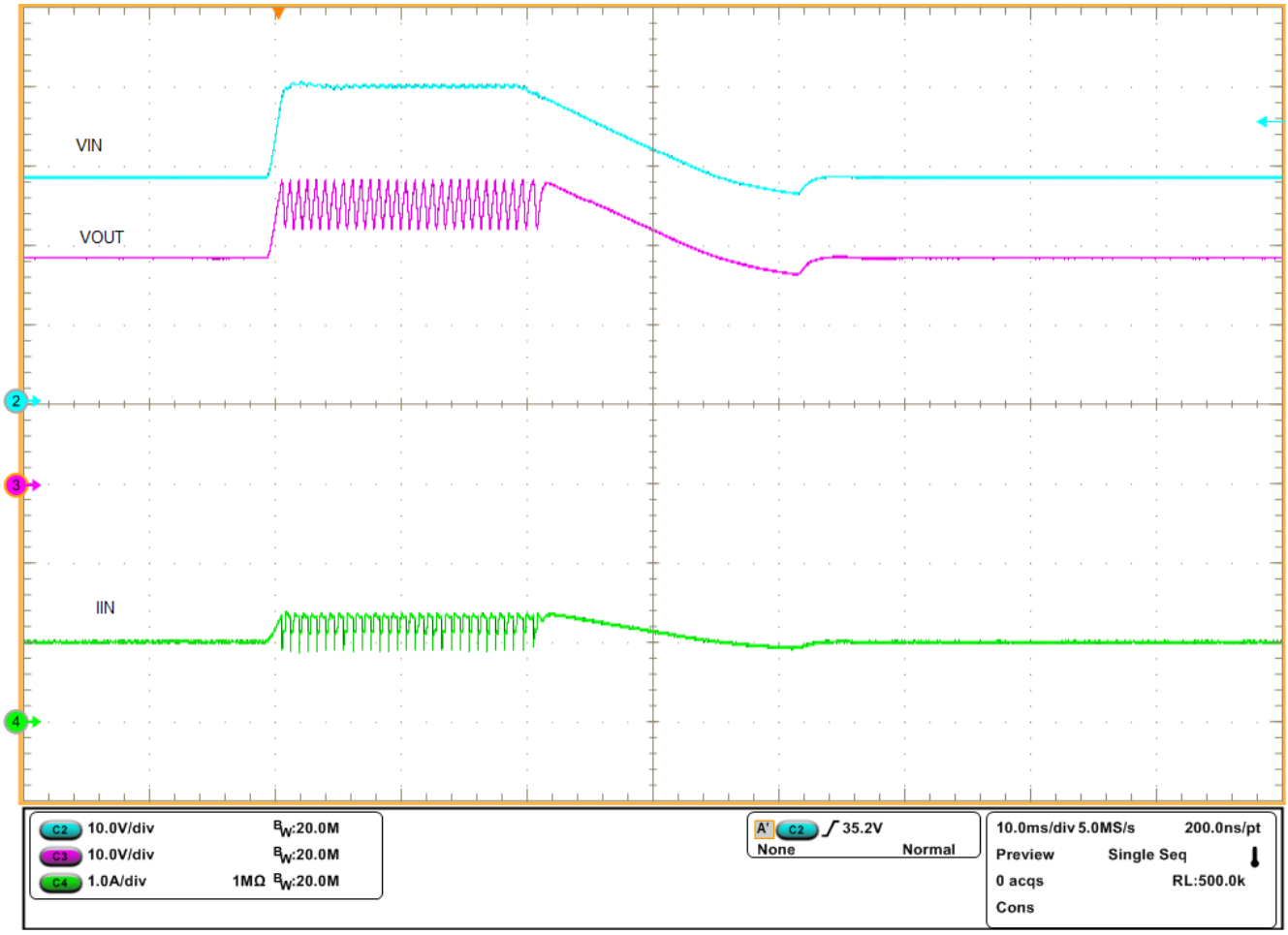

Figure 9-3. Programmable Output Overvoltage Clamp Response

9.3.3 Reverse Input Supply Protection

To protect the electronic systems from reverse input supply due to miswiring, often a power component like a schottky diode is added in series with the supply line as shown in Figure 9-4. These additional discretes result in a lossy and bulky protection solution. The TPS26400 devices feature fully integrated reverse input supply

Copyright © 2021 Texas Instruments Incorporated

protection and does not need an additional diode. These devices can withstand –42 V reverse voltage without damage. Figure 9-5 illustrates the reverse input polarity protection functionality.

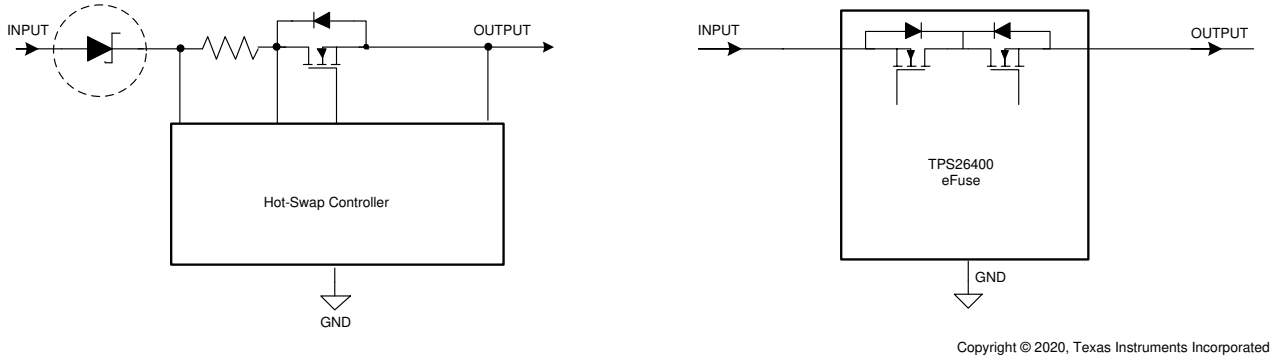

Copyright © 2020, Texas Instruments Incorporated

Figure 9-4. Reverse Input Supply Protection Circuits - Discrete vs TPS26400

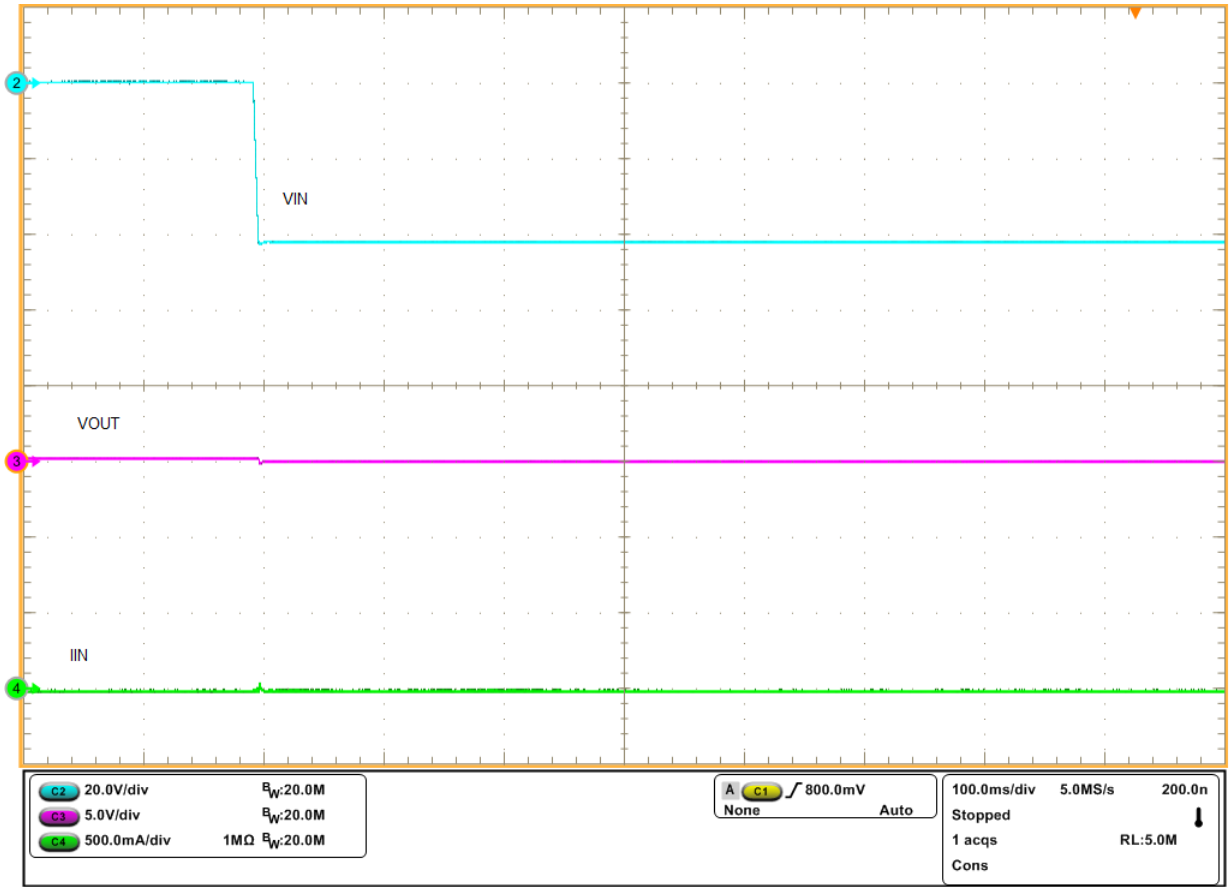

Figure 9-5. Reverse Input Supply Protection at –42 V

9.3.4 Hot Plug-In and In-Rush Current Control

The device is designed to control the in-rush current upon insertion of a card into a live backplane or other "hot" power source. This limits the voltage sag on the backplane's supply voltage and prevents unintended resets of the system power. The controlled start-up also helps to eliminate conductive and radiative interferences. An external capacitor connected from the dVdT pin to RTN defines the slew rate of the output voltage at power-on as shown in Figure 9-6 and Figure 9-7.

Copyright © 2021 Texas Instruments Incorporated

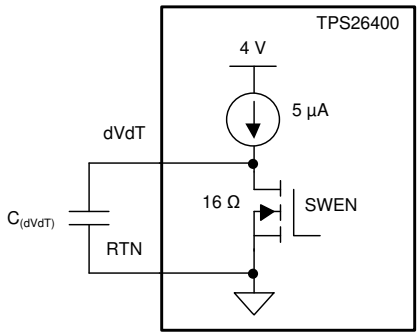

Figure 9-6. Output Ramp Up Time t_{dVdT} is Set by $C_{(dVdT)}$

The dVdT pin can be left floating to obtain a predetermined slew rate (t_{dVdT}) on the output. When the terminal is left floating, the devices set an internal output voltage ramp rate of 23.9 V/1.6 ms. A capacitor can be connected from dVdT pin to RTN to program the output voltage slew rate slower than 23.9 V/1.6 ms. Use Equation 1 and Equation 2 to calculate the external $C_{(dVdT)}$ capacitance.

Equation 1 governs slew rate at start-up.

$$I_{(dVdT)} = \left(\frac{C_{(dVdT)}}{Gain_{(dVdT)}} \right) \times \left(\frac{dV_{(OUT)}}{dt} \right) \quad (1)$$

where

- $I_{(dVdT)}$ = 4.7 µA (typical)
- $\frac{dV\ (OUT)}{dt}$
- $Gain_{(dVdT)}$ = dVdT to V_{OUT} gain = 24.6

The total ramp time (tdVdT) of V(OUT) for 0 to V(IN) can be calculated using Equation 2.

$$t_{dVdT} = 8 \times 10^3 \times V_{(IN)} \times C_{(dVdT)} \quad (2)$$

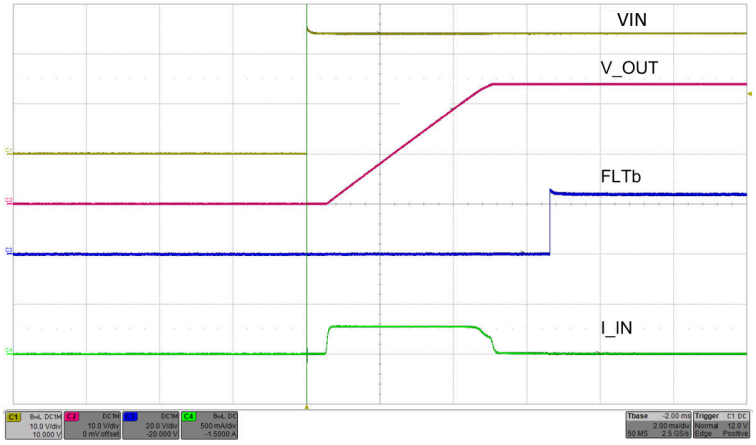

Figure 9-7. Hot Plug-In and In-Rush Current Control at 24-V Input

9.3.5 Overload and Short Circuit Protection

The device monitors the load current by sensing the voltage across the internal sense resistor. The FET current is monitored during start-up and normal operation.

Copyright © 2021 Texas Instruments Incorporated

9.3.5.1 Overload Protection

The device offers following choices for the overload protection fault response:

- Active current limiting (Auto-retry/Latch-off modes)
- Electronic Circuit Breaker with overload timeout (Auto-retry)

See the configurations in Table 1 to select a specific overload fault response.

Table 9-1. Overload Fault Response Configuration Table

MODE PIN CONFIGURATION	OVERLOAD PROTECTION TYPE	DEVICE
Open	Electronic circuit breaker with auto-retry	TPS26400
Shorted to RTN	Active current limiting with auto-retry	TPS26400
A 402-kΩ resistor across MODE pin to RTN pin	Active current limiting with latch-off	TPS26400

9.3.5.1.1 Active Current Limiting

When the active current limiting mode is selected, during overload events, the device continuously regulates the load current to the overcurrent limit I(OL) programmed by the R(ILIM) resistor as shown in Equation 3.

$$I_{OL} = \frac{12}{R_{(ILIM)}} \tag{3}$$

where

- $I_{(OL)}$ is the overload current limit in Ampere
- $R_{(ILIM)}$ is the current limit resistor in kΩ

During an overload condition, the internal current-limit amplifier regulates the output current to I(LIM). The FLT signal assert after a delay of 875 µs. The output voltage droops during the current regulation, resulting in increased power dissipation in the device. If the device junction temperature reaches the thermal shutdown threshold (T(TSD)), the internal FET is turn off. The device configured in latch-off mode stays latched off until it is reset by either of the following conditions:

- Cycling V(IN) below V(PORF)
- Toggling $\overline{\text{SHDN}}$

Whereas the device configured in auto-retry mode, commences an auto-retry cycle 512 ms after TJ < [T(TSD) – 10°C]. The FLT signal remains asserted until the fault condition is removed and the device resumes normal operation. Figure 9-8 and Figure 9-9 illustrates behavior of the system during current limiting with auto-retry functionality.

Copyright © 2021 Texas Instruments Incorporated

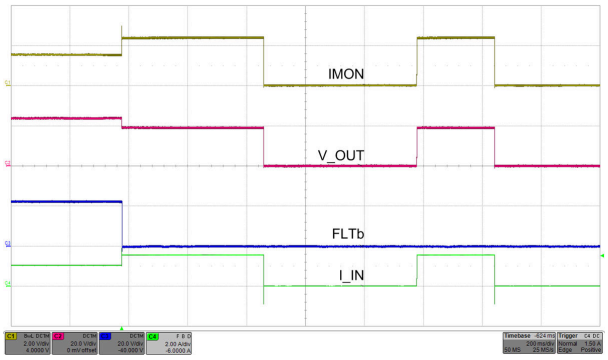

Load transition from 22 Ω to 12 Ω | MODE pin connected to RTN | R_{ILIM} = 8 kΩ

Figure 9-8. Auto-Retry MODE Fault Behavior

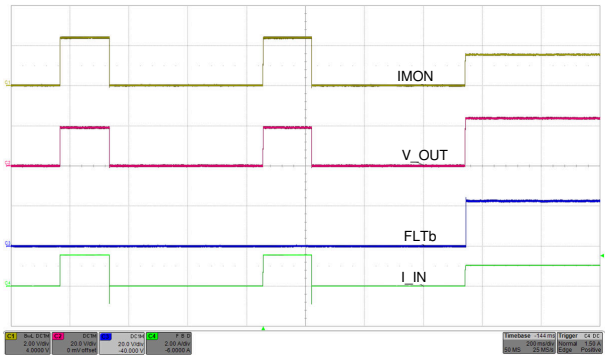

R_{ILIM} = 5.36 kΩ

Figure 9-9. Response During Coming Out of Overload Fault

9.3.5.1.2 Electronic Circuit Breaker with Overload Timeout, MODE = OPEN

In this mode, during overload events, the device allows the overload current to flow through the device until $I_{(LOAD)} < I_{(FASTRIP)}$. The circuit breaker threshold $I_{(CB)}$ can be programmed using the $R_{(ILIM)}$ resistor as shown in Equation 4.

$$I_{(CB)} = \frac{12}{R_{(ILIM)}} + 0.03A \quad (4)$$

where

- $I_{(CB)}$ is circuit breaker current threshold in Ampere
- $R_{(ILIM)}$ is the current limit resistor in kΩ

An internal timer starts when $I_{(CB)} < I_{LOAD} <$ IFASTRIP, and when the timer exceeds tCB(dly), the device turns OFF the internal FET and $\overline{FLT}$ is asserted. After the internal FET is turned off,

the device commences an auto-retry cycle after 540 ms. The $\overline{FLT}$ signal remains asserted until the fault condition is removed and the device resumes normal operation. Figure 9-10 and Figure 9-11 illustrate behavior of the system during electronic circuit breaker with auto-retry functionality.

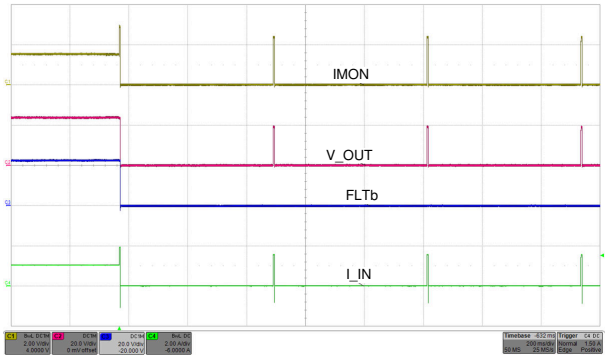

MODE left floating | Load Transition from 22 Ω to 12 Ω | R_{ILIM} = 8 kΩ

Figure 9-10. Circuit Breaker Functionality

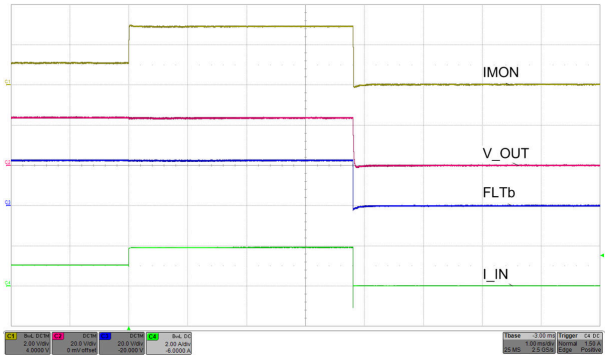

Load Transition from 22 Ω to 12 Ω , R_{ILIM} = 8 kΩ

Figure 9-11. Zoomed at the Instance of Load Step

Copyright © 2021 Texas Instruments Incorporated

9.3.5.2 Short Circuit Protection

During a transient output short circuit event, the current through the device increases very rapidly. As the currentlimit amplifier cannot respond quickly to this event due to its limited bandwidth, the device incorporates a fast-trip comparator, with a threshold $I_{(FASTRIP)}$. The fast-trip comparator turns off the internal FET within 250 ns (typical), when the current through the FET exceeds $I_{(FASTRIP)}$ ($I_{(OUT)} > I_{(FASTRIP)}$), and terminates the rapid short-circuit peak current. The fast-trip threshold is internally set to 87% higher than the programmed overload current limit ($I_{(FASTRIP)} = 1.87 \times I_{(OL)} + 0.015$). The fast-trip circuit holds the internal FET off for only a few microseconds, after which the device turns back on slowly, allowing the current-limit loop to regulate the output current to $I_{(OL)}$. Then, device behaves similar to overload condition. Figure 9-12 and Figure 9-13 illustrate the behavior of the system when the current exceeds the fast-trip threshold.

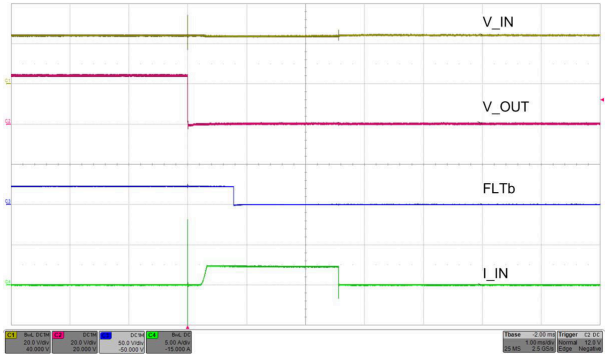

VIN = 24 V, R_{ILIM} = 5.36 kΩ

Figure 9-12. Output Hot Short Functionality at 24-V Input

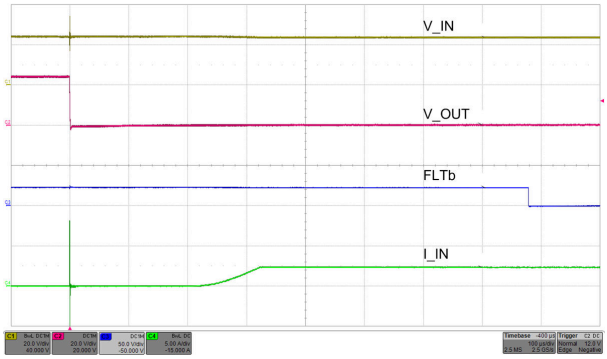

Figure 9-13. Zoomed at the Instance of Output Short

9.3.5.2.1 Start-Up With Short-Circuit On Output

When the device is started with short-circuit on the output, it limits the load current to the current limit I(OL) and behaves similar to the overload condition. Figure 9-14 illustrates the behavior of the device in this condition. This feature helps in quick isolation of the fault and hence ensures stability of the DC bus

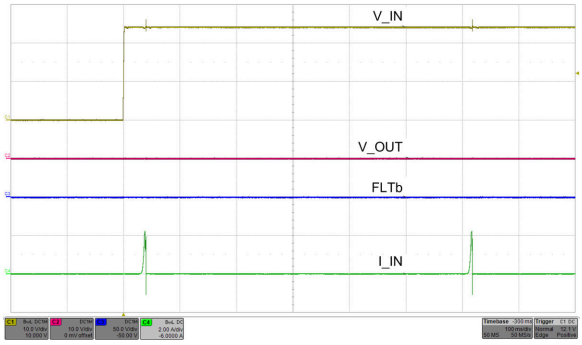

MODE pin connected to RTN
VIN = 24 V R_{ILIM} = 5.36 kΩ

Figure 9-14. Start-Up With Short on Output

9.3.5.3 FAULT Response

The $\overline{FLT}$ open-drain output asserts (active low) under following conditions:

- Fault events such as undervoltage, overvoltage, over load, reverse current and thermal shutdown conditions
- When the device enters low current shutdown mode when SHDN is pulled low

Copyright © 2021 Texas Instruments Incorporated

- During start-up when the internal FET GATE is not fully enhanced

The device is designed to eliminate false reporting by using an internal "de-glitch" circuit for fault conditions without the need for an external circuitry.

The $\overline{FLT}$ signal can also be used as Power Good indicator to the downstream loads like DC-DC converters. An internal Power Good (PGOOD) signal is OR'd with the fault logic. During start-up, when the device is operating in dVdT mode, PGOOD and $\overline{FLT}$ remains low and is de-asserted after the dVdT mode is completed and the internal FET is fully enhanced. The PGOOD signal has deglitch time incorporated to ensure that internal FET is fully enhanced before heavy load is applied by the downstream converters. Rising deglitch delay is determined by tPGOOD(degl) = Maximum {(875 + 20 × $C_{(dVdT)}$), t_{PGOODR}}, where $C_{(dVdT)}$ is in nF and $t_{PGOOD(degl)}$ is in µs. $\overline{FLT}$ can be left open or connected to RTN when not used. $V_{(IN)}$ falling below $V_{(PORF)}$ = 3.72 V resets $\overline{FLT}$.

9.3.5.3.1 Look Ahead Overload Current Fault Indicator

With the device configured in current limit operation and when the overload condition exists for more than t_{PGOODF}, 875 µs (typical), the $\overline{FLT}$ asserts to warn of impending turnoff of the internal FETs due to the subsequent thermal shutdown event. Figure 9-15 and Figure 9-16 depict this behavior. The $\overline{FLT}$ signal remains asserted until the fault condition is removed and the device resumes normal operation.

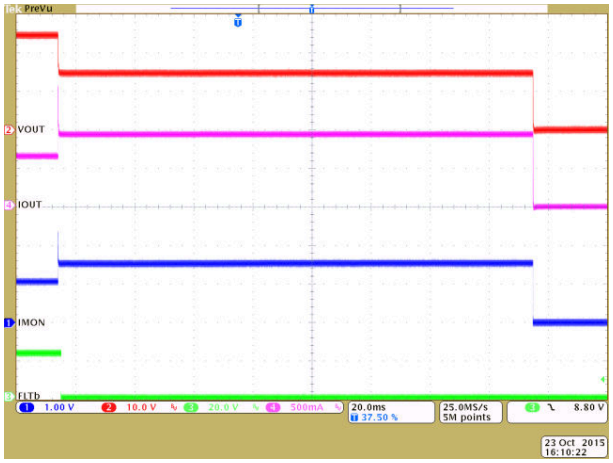

RILIM = 12 kΩ | RILIM = 12 kΩ MODE pin connected to RTN | Load transient event from 37 Ω to 15 Ω

Figure 9-15. Output Turnoff Due to Thermal Shutdown With FLT Asserted in Advance

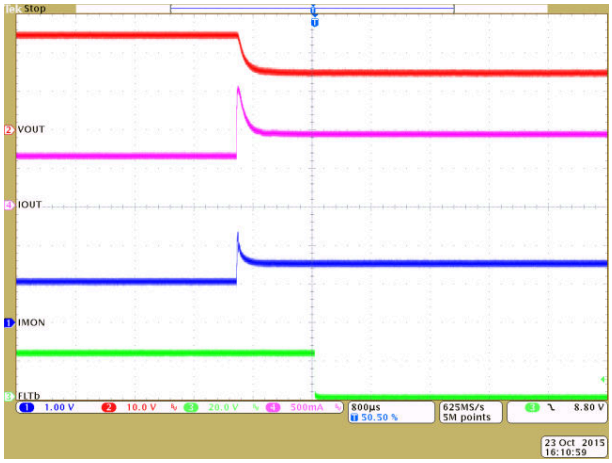

RILIM = 12 kΩ | RILIM = 12 kΩ MODE pin connected to RTN | Load transient event from 37 Ω to 15 Ω

Figure 9-16. Look Ahead Overload Current Fault Indication

9.3.5.4 Current Monitoring

The current source at IMON terminal is internally configured to be proportional to the current flowing from IN to OUT. This current can be converted into a voltage using a resistor $R_{(IMON)}$ from IMON terminal to RTN terminal. The IMON voltage can be used as a means of monitoring current flow through the system. The maximum voltage range ($V_{(IMONmax)}$) for monitoring the current is limited to minimum of ([$V_{(IN)}$ – 1.5 V, 4 V]) to ensure linear output. This puts a limitation on maximum value of $R_{(IMON)}$ resistor and is determined by Equation 5.

$$R_{(IMONmax)} = \frac{Min\,[(V_{(IN)} - 1.5),\, 4\ V]}{1.8 \times I_{(LIM)} \times GAIN_{(IMON)}} \tag{5}$$

The output voltage at IMON terminal is calculated using Equation 6 and Equation 7.

For IOUT > 50 mA,

$$V_{(IMON)} = [I_{(OUT)} \times GAIN_{(IMON)}] \times R_{(IMON)} \quad (6)$$

where,

- $GAIN_{(IMON)}$ is the gain factor $I_{(IMON)}$:$I_{(OUT)}$ = 78.4 µA/A (Typical)
- $I_{(OUT)}$ is the load current
- $I_{(MON_OS)}$ = 2 µA (Typical)

For I_{OUT} < 50 mA (typical), use Equation 7.

$$V_{(IMON)} = (I_{(IMON_OS)}) \times R_{(IMON)} \quad (7)$$

This pin must not have a bypass capacitor to avoid delay in the current monitoring information. In case of reverse input polarity fault, an external 100-kΩ resistor is recommended between IMON pin and ADC input to limit the current through the ESD protection structures of the ADC.

9.3.5.5 IN, OUT, RTN, and GND Pins

The device has two pins for input (IN) and output (OUT). All IN pins must be connected together and to the power source. A ceramic bypass capacitor close to the device from IN to GND is recommended to alleviate bus transients. The recommended input operating voltage range is 4.2 to 42 V. Similarly all OUT pins must be connected together and to the load. V(OUT), in the ON condition, is calculated using Equation 8.

$$V_{(OUT)}\ V_{(IN)} - (RON) \times I_{(OUT)} \quad (8)$$

Where,

- RON is the total ON resistance of the internal FETs.

GND pin must be connected to the system ground. RTN is the device ground reference for all the internal control blocks. Connect the TPS26400 support components: $R_{(ILIM)}$, $C_{(dVdT)}$, $R_{(IMON)}$, $R_{(MODE)}$ and resistors for UVLO and OVP with respect to the RTN pin. Internally, the device has reverse input polarity protection block between RTN and the GND terminal. Connecting RTN pin to GND pin disables the reverse input polarity protection feature and the TPS26400 gets permanently damaged when operated under this fault event.

9.3.5.6 Thermal Shutdown

The device has a built-in overtemperature shutdown circuitry designed to protect the internal FETs, if the junction temperature exceeds $T_{(TSD)}$. After the thermal shutdown event, depending upon the mode of fault response, the device either latches off or commences an auto-retry cycle 512 ms after TJ < [$T_{(TSD)}$ – 10°C]. During the thermal shutdown, the fault pin $\overline{FLT}$ pulls low to indicate a fault condition.

9.3.5.7 Low Current Shutdown Control ($\overline{SHDN}$)

The internal FETs and hence the load current can be switched off by pulling the $\overline{SHDN}$ pin below 0.76 V threshold with a micro-controller GPIO pin or can be controlled remotely with an opto-isolator device as shown in Figure 9-17 and Figure 9-18. The device quiescent current reduces to 20 µA (typical) in shutdown state. To assert SHDN low, the pull down must sink at least 10 µA at 400 mV. To enable the device, $\overline{SHDN}$ must be pulled up to atleast 1 V. Once the device is enabled, the internal FETs turnon with dVdT mode.

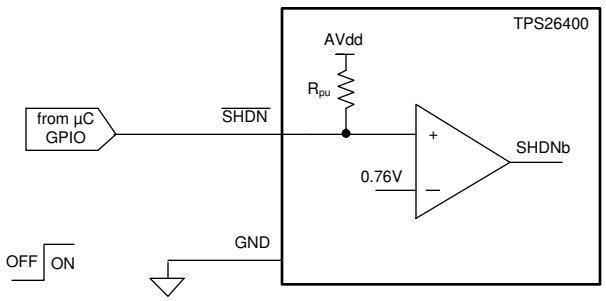

Figure 9-17. Shutdown Control

Copyright © 2021 Texas Instruments Incorporated

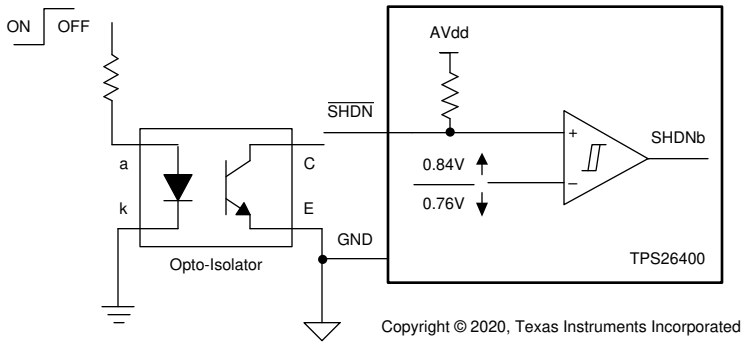

Figure 9-18. Opto-Isolator Shutdown Control

9.4 Device Functional Modes

Different operational modes of the device are explained in Table 9-2.

Table 9-2. Device Operational Differences Under Different MODE Configurations

MODEPIN CONFIGURATION	MODE CONNECTED TO RTN (CURRENT LIMIT WITH AUTO-RETRY)	A 402-kΩ RESISTOR CONNECTED BETWEEN MODE AND RTN PINS (CURRENT LIMIT WITH LATCHOFF)	MODE PIN = OPEN (CIRCUIT BREAKER WITH AUTO-RETRY)
Start-up	Inrush current controlled by dVdT		
	Inrush limited to $I_{(OL)}$ level as set by $R_{(ILIM)}$	Inrush limited to $I_{(OL)}$ level as set by $R_{(ILIM)}$	Inrush limited to $I_{(OL)}$ level as set by $R_{(ILIM)}$
			Fault timer runs when current is limited to $I_{(OL)}$
			Fault timer expires after $t_{CB(dly)}$ causing the FETs to turnoff
	If TJ > $T_{(TSD)}$, device turns off		
Overcurrent response	Current is limited to $I_{(OL)}$ level as set by $R_{(ILIM)}$	Current is limited to $I_{(OL)}$ level as set by $R_{(ILIM)}$	Current is allowed through the device if $I_{(LOAD)} < I_{(FASTTRIP)}$
	Power dissipation increases as $V_{(IN)} – V_{(OUT)}$ increases	Power dissipation increases as $V_{(IN)} – V_{(OUT)}$ increases	Fault timer runs when the current increases above $I_{(OL)}$
			Fault timer expires after $t_{CB(dly)}$ causing the FETs to turnoff
	Device turns off when TJ > $T_{(TSD)}$	Device turns off when TJ > $T_{(TSD)}$	Device turns off if $T_J > T_{(TSD)}$ before timer expires
	Device attempts restart 540 ms after TJ < [$T_{(TSD)}$ – 10°C]	Device remains off	TPS26400 device attempts to restart 540 ms after $T_J < [T_{(TSD)}$ – 10°C]
Short-circuit response	Fast turnoff when $I_{(LOAD)} > I_{(FASTRIP)}$		
	Quick restart and current limited to $I_{(OL)}$, follows standard start-up		

Copyright © 2021 Texas Instruments Incorporated

10 Application and Implementation

Note

Information in the following applications sections is not part of the TI component specification, and TI does not warrant its accuracy or completeness. TI's customers are responsible for determining suitability of components for their purposes, as well as validating and testing their design implementation to confirm system functionality.

10.1 Application Information

The TPS26400 is an industrial eFuse, typically used for Hot-Swap and Power rail protection applications. It operates from 4.2 V to 42 V with programmable current limit, overvoltage, undervoltage and reverse polarity protection. The device aids in controlling in-rush current and provides robust protection against reverse current and filed miss-wiring conditions for systems such as PLCs, Industrial PCs, Control and Automation and Sensors. The device also provides robust protection for multiple faults on the system rail.

The Detailed Design Procedure section can be used to select component values for the device.

A spreadsheet design tool TPS26400 Design Calculator is available in the web product folder.

10.2 Typical Application

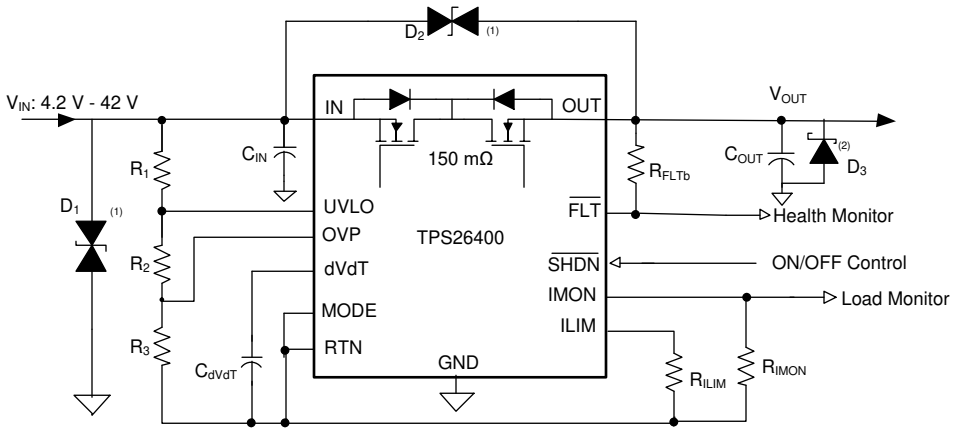

Note

1. Optional TVS Diodes (D1 and D2) for Power Line Surge IEC61000-4-5 [±500 V, 2 Ω].
2. Optional Schotky Diode (D3) for output short circuit protection with inductlive loads and cables.

Figure 10-1. 24-V, 1-A eFuse Input Protection Circuit for Industrial PLC CPU

10.2.1 Design Requirements

Table 3 shows the Design Requirements for current input protection with TPS26610.

Table 10-1. Design Requirements

DESIGN PARAMETER		EXAMPLE VALUE
$I_{(IN)}$	Input current	±20 mA
$V_{(IN)}$	Input voltage	$-V_s$ to 50 V
$V_{(OUT)}$	OutPut voltage	$\pm V_s$
$I_{(LIM)}$	Current limit	±30 mA
R_{Burden}	Burden resistance	50 to 250 Ω

Copyright © 2021 Texas Instruments Incorporated

10.2.2 Detailed Design Procedure

10.2.2.1 Step by Step Design Procedure

To begin the design process, the designer needs to know the following parameters:

- Input operating voltage range
- Maximum output capacitance
- Maximum current limit
- Load during start-up
- Maximum ambient temperature

This design procedure below seeks to control junction temperature of the device in both steady state and start-up conditions by proper selection of the output ramp-up time and associated support components. The designer can adjust this procedure to fit the application and design criteria.

10.2.2.2 Undervoltage Lockout and Overvoltage Set Point

The undervoltage lockout (UVLO) and overvoltage trip point are adjusted using an external voltage divider network of R1, R2 and R3 connected between IN, UVLO, OVP and RTN pins of the device. The values required for setting the undervoltage and overvoltage are calculated by solving Equation 9 and Equation 10.

$$V_{(OVPR)} = \frac{R3}{R1 + R2 + R3} \times V_{(OV)} \tag{9}$$

$$V_{(UVLOR)} = \frac{R2 + R3}{R1 + R2 + R3} \times V_{(UV)} \tag{10}$$

For minimizing the input current drawn from the power supply {$I_{(R123)} = V_{(IN)}/(R1+R2+R3)$}, it is recommended to use higher value resistance for R_1, R_2 and R_3.

However, the leakage current due to external active components connected at resistor string can add error to these calculations. So, the resistor string current, $I_{(R123)}$ must be chosen to be 20x greater than the leakage current of UVLO and OVP pins.

The UVLO and the OVP pins can also be connected to the RTN pin to enable the internal default $V_{(OV)}$ = 33 V and $V_{(UV)}$ = 15 V.

The power failure is detected on falling edge of the supply. This threshold voltage is 7.5% lower than the rising threshold, $V_{(UV)}$. The voltage at which the device detects power fail can be calculated using Equation 12.

$$V_{(PFAIL)}\ 0.925 \times V_{(UV)} \tag{11}$$

10.2.2.3 Programming Current Monitoring Resistor—R_{IMON}

The voltage at IMON pin $V_{(IMON)}$ represents the voltage proportional to the load current. This can be connected to an ADC of the downstream system for health monitoring of the system. The $R_{(IMON)}$ must be configured based on the maximum input voltage range of the ADC used. $R_{(IMON)}$ is set using Equation 12.

$$R_{(IMON)} = \frac{V_{(IMON\,max)}}{I_{(LIM)} \times 75 \times 10^{-6}} \tag{12}$$

For $I_{(LIM)}$ = 1 A, and considering the operating voltage range of ADC from 0 V to 2.5 V, $V_{(IMONmax)}$ is 2.5 V and $R_{(IMON)}$ is determined by Equation 13.

$$R_{(IMON)} = \frac{2.5}{1 \times 75 \times 10^{-6}} = 33.3\text{k}\Omega \tag{13}$$

Copyright © 2021 Texas Instruments Incorporated

Selecting the $R_{(IMON)}$ value less than determined ensures that ADC limits are not exceeded for maximum value of the load current. Choose the closest standard 1% resistor value: $R_{(IMON)}$ = 33.2 kΩ.

If current monitoring up to $I_{(FASTRIP)}$ is desired, $R_{(IMON)}$ can be reduced by a factor of 1.8 as shown in Equation 5.

10.2.2.4 Setting Output Voltage Ramp Time—(t_{dVdT})

For a successful design, the junction temperature of the device must be kept below the absolute-maximum rating during dynamic (start-up) and steady state conditions. The dynamic power dissipation is often an order magnitude greater than the steady state power dissipation. It is important to determine the right start-up time and the in-rush current limit for the system to avoid thermal shutdown during start-up with and without load.

The ramp-up capacitor $C_{(dVdT)}$ is calculated considering the two possible cases:

10.2.2.4.1 Case 1: Start-Up Without Load—Only Output Capacitance $C_{(OUT)}$ Draws Current During Start-Up

During start-up, as the output capacitor charges, the voltage difference across the internal FET decreases, and the power dissipation decreases. Typical ramp-up of the output voltage, inrush current and instantaneous power dissipated in the device during start-up are shown in Figure 10-2. The average power dissipated in the device during start-up is equal to the area of triangular plot (red curve in Figure 10-3) averaged over t_{dVdT}.

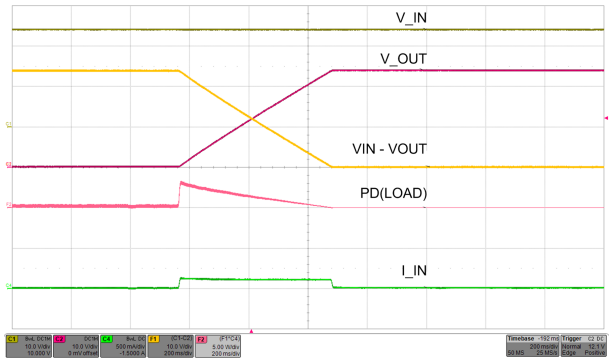

V_{IN} = 24 V C_{dVdT} = 2.2 µF C_{OUT} = 2.2 mF

Figure 10-2. Start-Up Without Load

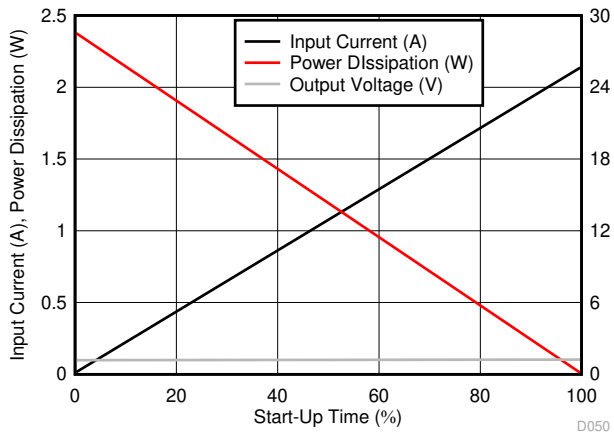

V_{IN} = 24 V C_{dVdT} = 2.2 µF C_{OUT} = 2.2 mF

Figure 10-3. $PD_{(INRUSH)}$ Due to Inrush Current

The inrush current is determined as shown in Equation 14.

$$I = C \times \frac{dV}{dT} \geq I_{(INRUSH)} = C_{(OUT)} \times \frac{V_{(IN)}}{t_{dVdT}} \quad (14)$$

Average power dissipated during start-up is given by Equation 15.

$$PD_{(INRUSH)}\ 0.5 \times V_{(IN)} \times I_{(INRUSH)} \quad (15)$$

Equation 15 assumes that the load does not draw any current until the output voltage reaches its final value.

10.2.2.4.2 Case 2: Start-Up With Load—Output Capacitance C(OUT) and Load Draws Current During Start-Up

When the load draws current during the turnon sequence, additional power is dissipated in the device. Considering a resistive load $R_{L(SU)}$ during start-up, typical ramp-up of output voltage, load current and the instantaneous power dissipation in the device are shown in Figure 10-4. Instantaneous power dissipation with respect to time is plotted in Figure 10-5. The additional power dissipation during start-up is calculated using Equation 16.

Copyright © 2021 Texas Instruments Incorporated

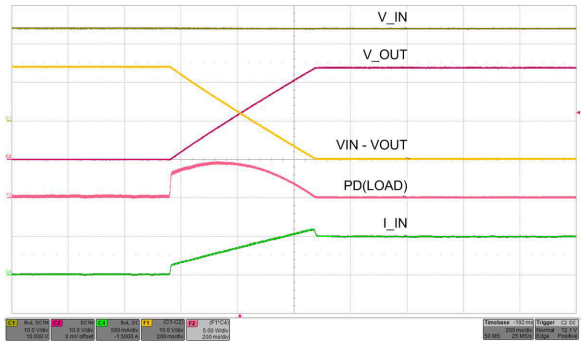

V_{IN} = 24 V
C_{dVdT} = 2.2 µF
$R_{L(SU)}$ = 48 Ω
C_{OUT} = 2.2 mF

Figure 10-4. Start-Up With Load

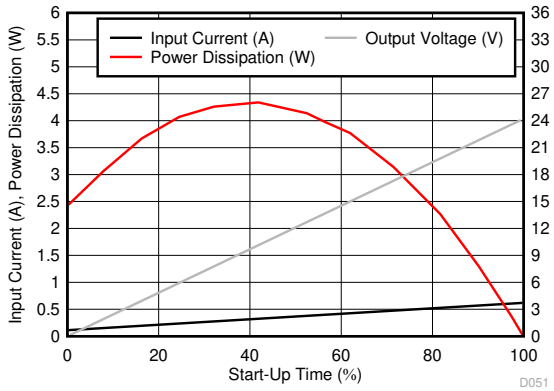

V_{IN} = 24 V
C_{dVdT} = 2.2 µF
$R_{L(SU)}$ = 48 Ω
C_{OUT} = 2.2 mF

Figure 10-5. $PD_{(INRUSH)}$ Due to Inrush and Load Current

$$P_{D(LOAD)} = \frac{1}{6} \times \frac{V_{(IN)}^2}{R_{L(SU)}} \quad (16)$$

Total power dissipated in the device during start-up is given by Equation 17.

$$PD_{(STARTUP)}\ PD_{(INRUSH)} = PD_{(LOAD)} \quad (17)$$

Total current during start-up is given by Equation 18.

$$I_{(STARTUP)} = I_{(INRUSH)} \div I_{L(t)} \quad (18)$$

For the design example under discussion,

Select the inrush current $I_{(INRUSH)}$ = 0.1 A and calculate t_{dVdT} using Equation 19.

$$t_{(dVdT)} = 2.2m \times \frac{24}{0.1} = 0.528s \quad (19)$$

For a given start-up time, C_{dVdT} capacitance value is calculated using Equation 20.

$$C_{(dVdT)} = \frac{t_{(dVdT)}}{8 \times 10^3 \times V_{(IN)}} = 2.7\mu F \quad (20)$$

where

- $t_{(dVdT)}$ = 0.528 s
- $V_{(IN)}$ = 24 V

Choose the closest standard value: 2.2-µF/16-V capacitor.

The inrush power dissipation is calculated, using Equation 21.

$$PD_{(INRUSH)} = 0.5 \times V_{(IN)} = I_{(INRUSH)}\ 1.2W \quad (21)$$

where

- $V_{(IN)}$ = 24 V

Copyright © 2021 Texas Instruments Incorporated

- $I_{(INRUSH)}$ = 0.1 A

Considering the start-up with 48-Ω load, the additional power dissipation, is calculated using Equation 22.

$$P_{D(LOAD)} = \left(\frac{1}{6}\right) \times \frac{V_{(IN)}^2}{R_{L(SU)}} = 2 \text{ W} \quad (22)$$

where

- $V_{(IN)}$ = 24 V
- $R_{L(SU)}$ = 48 Ω

The total device power dissipation during start-up is given by Equation 23.

$$P_{D(STARTUP)} = P_{D(INRUSH)} + P_{D(LOAD)} = 3.2W \quad (23)$$

where

- $P_{D(INRUSH)}$ = 1.2 W
- $P_{D(LOAD)}$ = 2 W

The power dissipation with or without load, for a selected start-up time must not exceed the thermal shutdown limits as shown in Figure 10-6 .

From the thermal shutdown limit graph, at T_A = 85°C, thermal shutdown time for 3.2 W is close to 28000 ms. It is safe to have a minimum 30% margin to allow for variation of the system parameters such as load, component tolerance, input voltage and layout. Selected 2.2-µF C_{dVdT} capacitor and 528-ms start-up time (t_{dVdT}) are within limit for successful start-up with 48-Ω load.

Higher value $C_{(dVdT)}$ capacitor can be selected to further reduce the power dissipation during start-up.

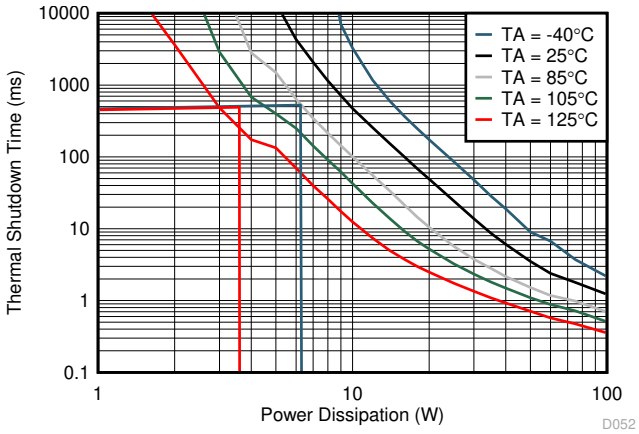

Figure 10-6. Thermal Shutdown Time vs Power Dissipation

10.2.2.4.3 Support Component Selections—R_{FLTb} and $C_{(IN)}$

The R_{FLTb} serves as pull-up for the open-drain fault output. The current sink by this pin must not exceed 10 mA (see the Absolute Maximum Ratings table). Typical resistance value in the range of 10 kΩ to 100 kΩ is recommended for RFLTb. The C_{IN} is a local bypass capacitor to suppress noise at the input. Typical capacitance value in the range of 0.1 µF to 1 µF is recommended for $C_{(IN)}$.

Copyright © 2021 Texas Instruments Incorporated

10.2.3 Application Curves

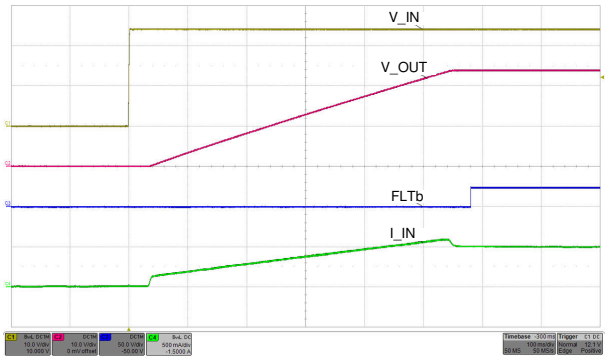

Figure 10-7. Start-Up With VIN—48-Ω Load

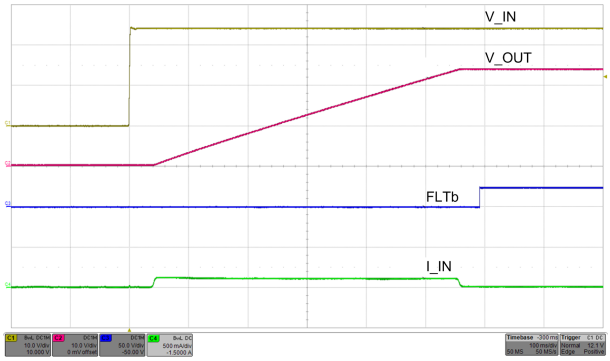

Figure 10-8. Start-Up With VIN—No Load

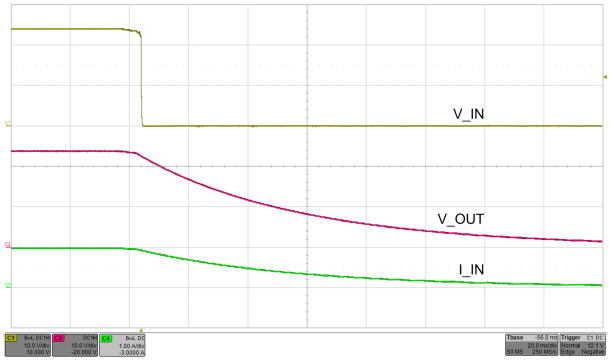

Figure 10-9. Power Fail With 24-Ω Load—Supports 1-A Load for 10-ms Power Fail

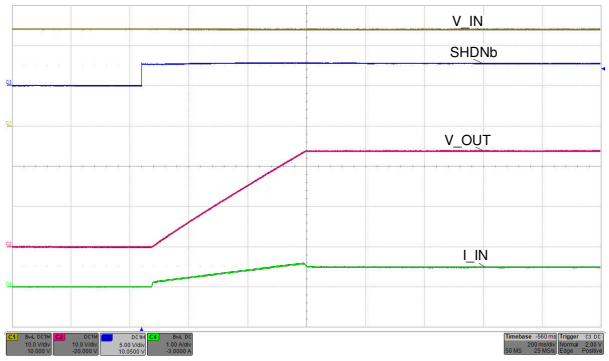

Figure 10-10. Start-Up With Shutdown Pin—48-Ω Load

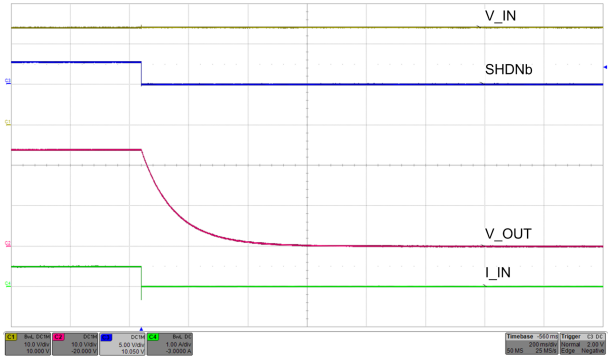

Figure 10-11. Power Down With Shutdown Pin—48-Ω Load

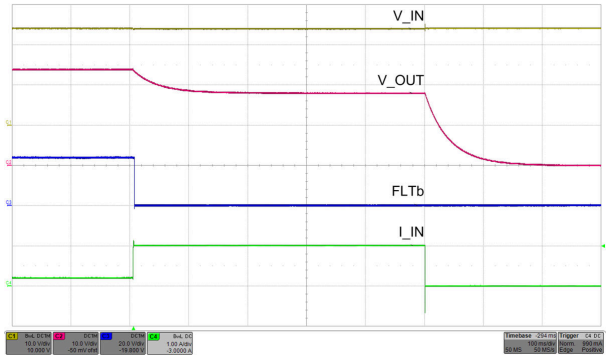

Figure 10-12. Over Load Response—Load Stepped from 100-Ω to 18-Ω Load

Copyright © 2021 Texas Instruments Incorporated

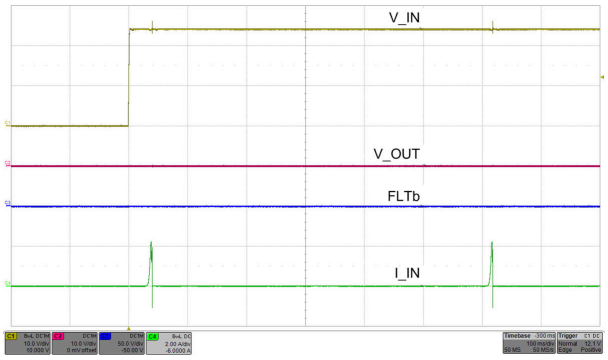

Figure 10-13. Turnon With Short Circuit on Output

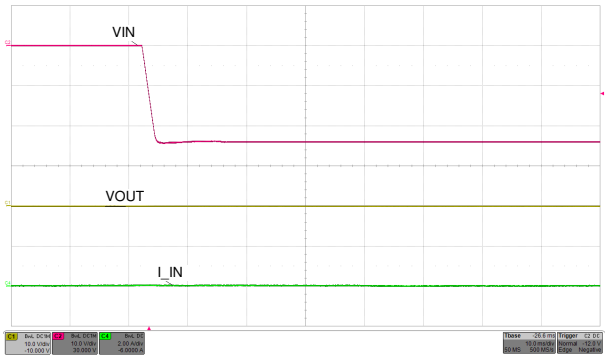

Figure 10-14. Reverse Polarity Protection

10.3 System Examples

10.3.1 Acive ORing Operation

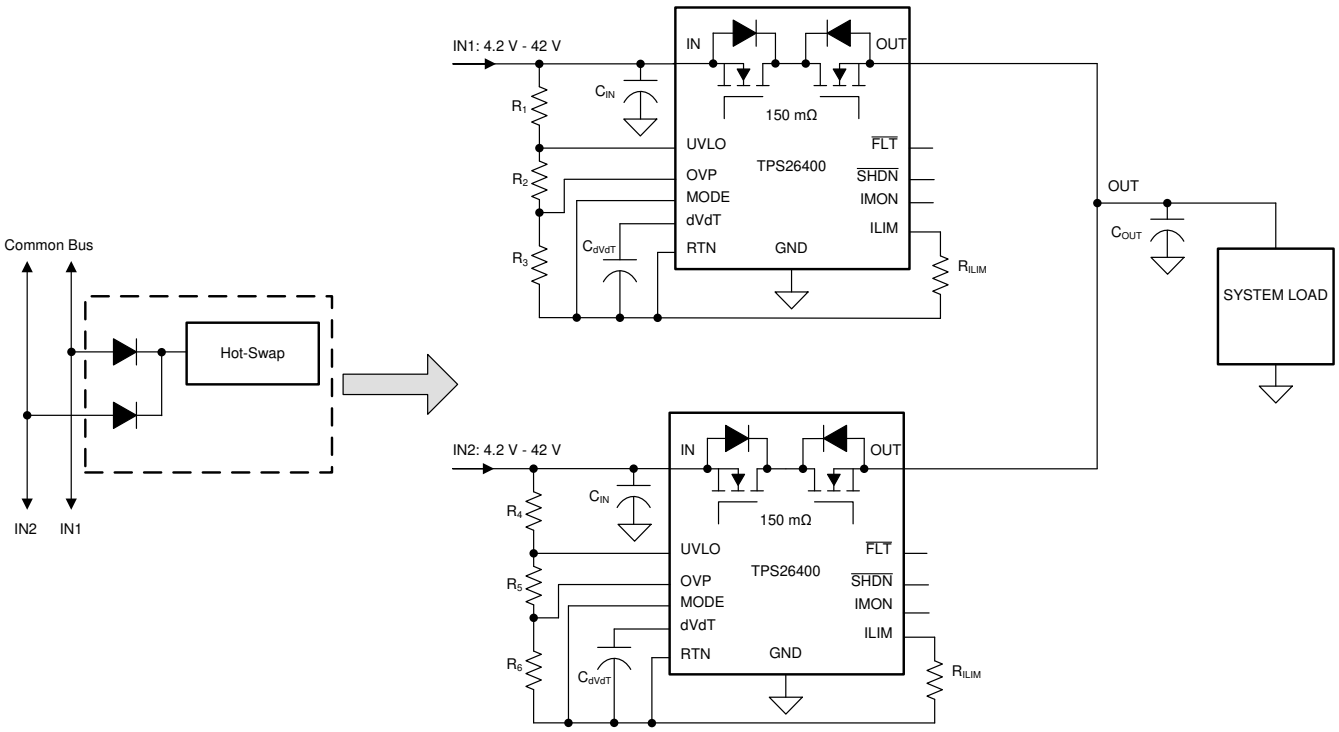

Figure 10-15. Active ORing Application Schematic

Figure 10-15 shows a typical redundant power supply configuration of the system. Schottky ORing diodes have been popular for connecting parallel power supplies, such as parallel operation of wall adapter with a battery or a hold-up storage capacitor. The disadvantage of using ORing diodes is high voltage drop and associated power loss. The TPS26400 with integrated, N-channel back to back FETs provide a simple and efficient solution.

A fast reverse comparator controls the internal FET and it is turned ON or OFF with hysteresis as shown in Figure 10-16. The internal FET is turned off within 1.5 µs (typical) as soon as $V_{(IN)} – V_{(OUT)}$ falls below –110 mV. It turns on within 40 µs (typical) once the differential forward voltage $V_{(IN)} – V_{(OUT)}$ exceeds 100 mV. Figure 10-17 and Figure 10-18 show typical switch-over waveforms of Active ORing implementation using the TPS26400.

Copyright © 2021 Texas Instruments Incorporated

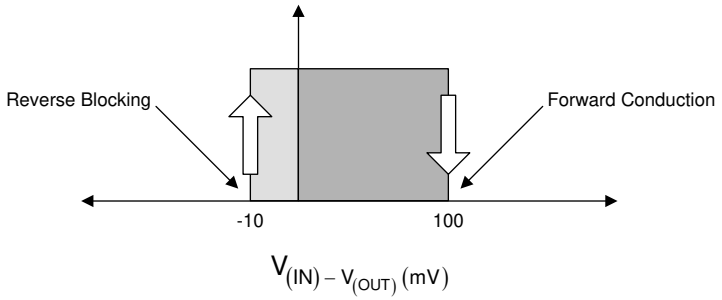

Figure 10-16. Active ORing Thresholds

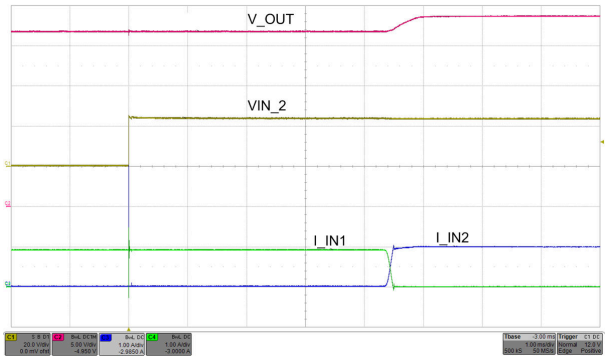

VIN1 = 22 V
Cout = 47 µF
VIN2: Plugged In at 24 V
Rload = 24 Ω
$C_{(dVdT)}$ = 22 nF

Figure 10-17. Active ORing Between Two Supplies VOUT Change Over to VIN2

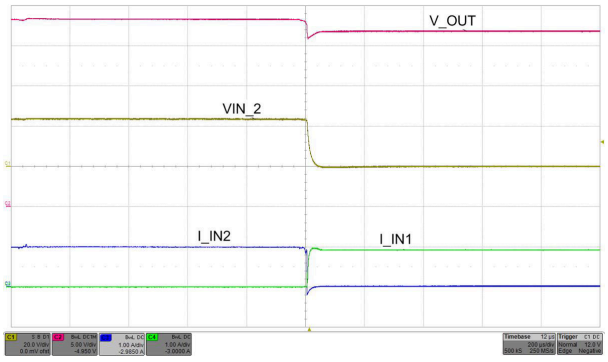

VIN1 = 22 V
Cout = 47 µF
VIN2: Plugged In at 24 V
Rload = 24 Ω
$C_{(dVdT)}$ = 22 nF

Figure 10-18. Active ORing Between Two Supplies VOUT Change Over to VIN1

Note

All control pins of the un-powered TPS26400 device in the Active ORing configuration will measure approximately 0.7 V drop with respect to GND. The system micro-controller should ignore IMON and $\overline{FLT}$ pin voltage measurements of this device when these signals are being monitored.

Copyright © 2021 Texas Instruments Incorporated

10.3.2 Field Supply Protection in PLC, DCS I/O Modules

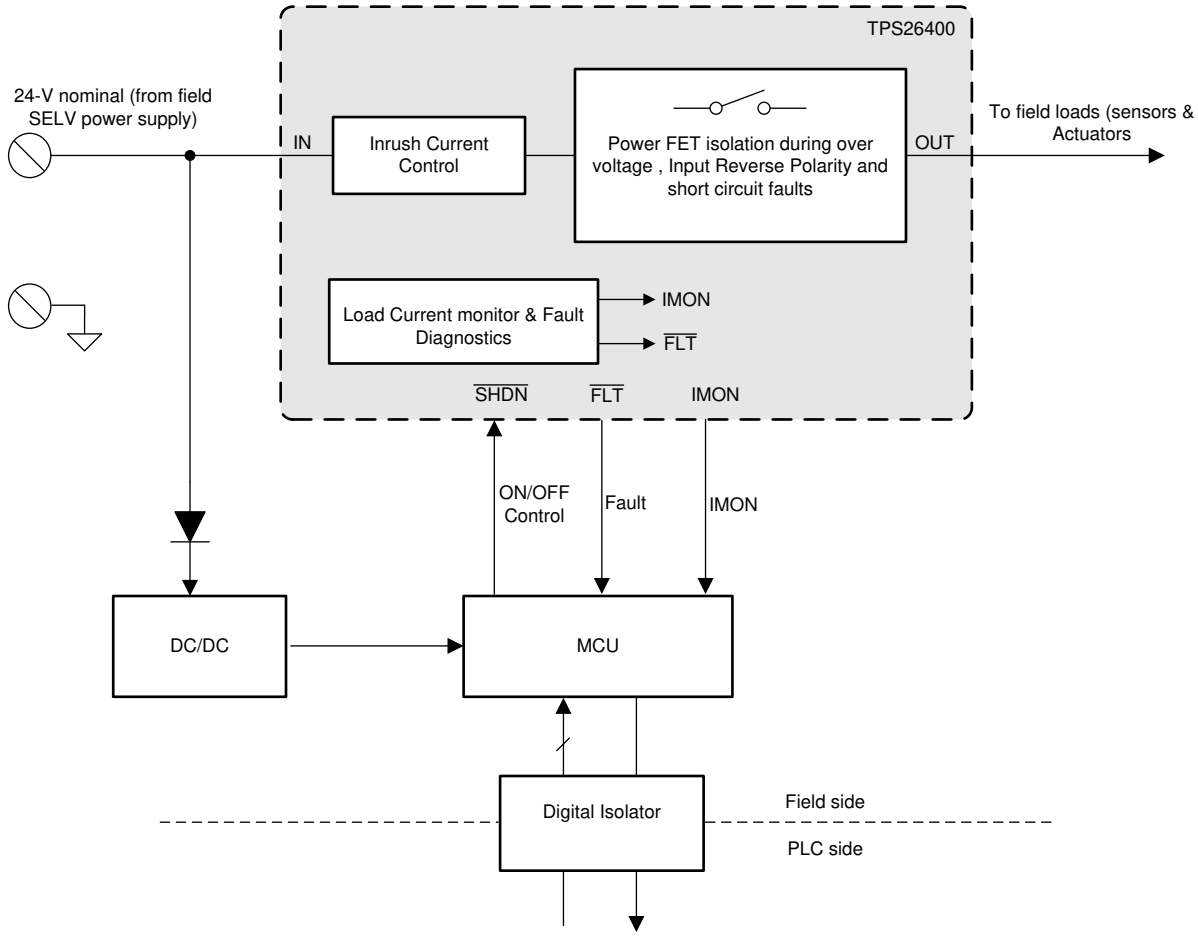

Figure 10-19. Power Delivery Circuit Block Diagram in I/O Modules

The PLC or Distributed Control System (DCS) I/O modules are often connected to an external field power supply to support higher power requirements of the field loads like sensors and actuators. Power-supply faults or miswiring can damage the loads or cause the loads not to operate correctly. The TPS26400 can be used as a front end protection circuit to protect and provide stable supply to the field loads. Under voltage, Over voltage and reverse polarity protection features of the TPS26400 prevent the loads to experience voltages outside the operating range, which can permanently damage the loads.

Field power supply is often connected to multiple I/O modules and is capable of delivering more current than a single I/O module can handle. Overcurrent protection scheme of the TPS26400 limits the current from the power supply to the module so that the maximum current does not rise above what the board is designed for. Fast short circuit protection scheme isolates the faulty load from the field supply quickly and prevents the field supply to dip and cause interrupts in the other I/O modules connected to the same field supply. High accurate (±5% at 1 A) current limit facilitates more I/O modules to be connected to field supply. Load current monitor (IMON) and fault indication ($\overline{\text{FLT}}$) features facilitate continuous load monitoring.

The TPS26400 also acts as a smart diode with protection against reverse current during output side miswiring. Reverse current can potentially damage the field power supply and cause the I/O modules to run hot or may cause permanent damage.

If the field power supply is connected in reverse polarity (which is not unlikely as field power supplies are usually connected with screw terminals), field loads can permanently get damaged due to the reverse voltage. The reverse polarity protection feature of the TPS26400 prevents the reverse voltage to appear at the load side.

Copyright © 2021 Texas Instruments Incorporated

10.3.3 Simple 24-V Power Supply Path Protection

With the TPS26400, a simple 24-V power supply path protection can be realized using a minimum of three external components as shown in the schematic diagram in Figure 10-20. The external components required are: a $R_{(ILIM)}$ resistor to program the current limit, $C_{(IN)}$ and $C_{(OUT)}$ capacitors.

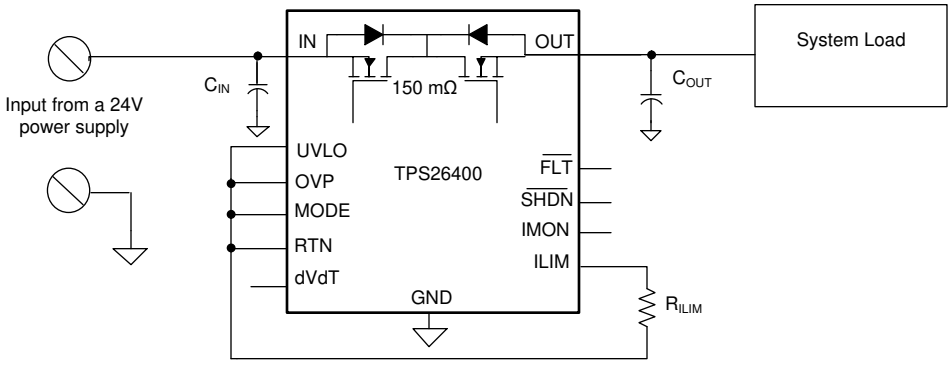

Figure 10-20. TPS2640 Configured for a Simple 24-V Supply Path Protection

Protection features with this configuration include:

- Load and device protection from reverse input polarity fault down to –42V
- 15 V (typical) rising under voltage lock-out threshold
- 33 V (typical) rising overvoltage cut-off threshold
- Inrush current control with 24-V/1.6-ms output voltage slew rate
- Reverse Current Blocking
- Accurate current limiting with Auto-Retry

10.4 Do's and Dont's

- Do not connect RTN to GND. Connecting RTN to GND disables the Reverse Polarity protection feature
- Connect the TPS26400 support components $R_{(ILIM)}$, $C_{(dVdT)}$, $R_{(IMON)}$, $R_{(MODE)}$ and UVLO, OVP resistors with respect to RTN pin
- Connect device PowerPAD to the RTN plane for an enhanced thermal performance

Copyright © 2021 Texas Instruments Incorporated

11 Power Supply Recommendations

The TPS26400 eFuse is designed for the supply voltage range of 4.2 V ≤ V_{IN} ≤ 42 V. If the input supply is located more than a few inches from the device, an input ceramic bypass capacitor higher than 0.1 µF is recommended. Power supply must be rated higher than the current limit set to avoid voltage droops during overcurrent and short circuit conditions

11.1 Transient Protection

In case of short circuit and over load current limit, when the device interrupts current flow, input inductance generates a positive voltage spike on the input and output inductance generates a negative voltage spike on the output. The peak amplitude of voltage spikes (transients) is dependent on value of inductance in series to the input or output of the device. Such transients can exceed the Abolsute Maximum Ratings of the device if steps are not taken to address the issue.

Typical methods for addressing transients include

- Minimizing lead length and inductance into and out of the device
- Using large PCB GND plane
- Schottky diode across the output to absorb negative spikes
- A low value ceramic capacitor ($C_{(IN)}$ to approximately 0.1 µF) to absorb the energy and dampen the transients.

The approximate value of input capacitance can be estimated with Equation 24.

$$V_{spike(Absolute)} = V_{(IN)} + I_{(Load)} \times \sqrt{\frac{L_{(IN)}}{C_{(IN)}}} \quad (24)$$

where

- $V_{(IN)}$ is the nominal supply voltage
- $I_{(LOAD)}$ is the load current
- $L_{(IN)}$ equals the effective inductance seen looking into the source
- $C_{(IN)}$ is the capacitance present at the input

Some applications may require additional Transient Voltage Suppressor (TVS) to prevent transients from exceeding the Abolsute Maximum Ratings of the device. These transients can occur during positive and negative surge tests on the supply lines. In such applications it is recommended to place atleast 1 µF of input capacitor to limit the falling slew rate of the input voltage within a maximum of 15 V/µs.

The circuit implementation with optional protection components (a ceramic capacitor, TVS and schottky diode) is shown in Figure 11-1.

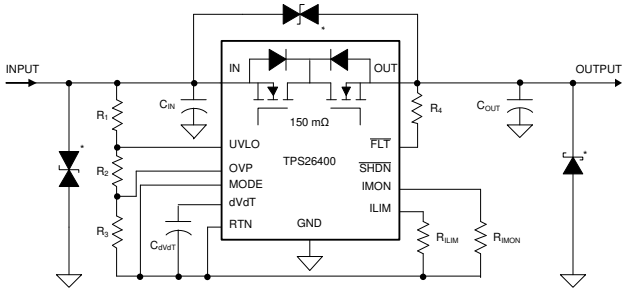

A. Optional components needed for suppression of transients

Figure 11-1. Circuit Implementation With Optional Protection Components

Copyright © 2021 Texas Instruments Incorporated

12 Layout

12.1 Layout Guidelines

- For all the applications, a 0.1 µF or higher value ceramic decoupling capacitor is recommended between IN terminal and GND.
- The optimum placement of decoupling capacitor is closest to the IN and GND terminals of the device. Care must be taken to minimize the loop area formed by the bypass-capacitor connection, the IN terminal, and the GND terminal of the IC. See Figure 12-1 and Figure 12-2 for PCB layout examples with HTSSOP and VQFN packages respectively.
- High current carrying power path connections must be as short as possible and must be sized to carry atleast twice the full-load current.
- RTN, which is the reference ground for the device must be a copper plane or island.
- Locate all the TPS26400 support components $R_{(ILIM)}$, $C_{(dVdT)}$, $R_{(IMON)}$, and MODE, UVLO, OVP resistors close to their connection pin. Connect the other end of the component to the RTN with shortest trace length.
- The trace routing for the R_{ILIM} and $R_{(IMON)}$ components to the device must be as short as possible to reduce parasitic effects on the current limit and current monitoring accuracy. These traces must not have any coupling to switching signals on the board.
- Protection devices such as TVS, snubbers, capacitors, or diodes must be placed physically close to the device they are intended to protect, and routed with short traces to reduce inductance. For example, a protection Schottky diode is recommended to address negative transients due to switching of inductive loads, and it must be physically close to the OUT and GND pins.
- Thermal Considerations: When properly mounted, the PowerPAD package provides significantly greater cooling ability. To operate at rated power, the PowerPAD must be soldered directly to the board RTN plane directly under the device. Other planes, such as the bottom side of the circuit board can be used to increase heat sinking in higher current applications. Designs that do not need reverse input polarity protection can have RTN, GND and PowerPAD connected together. PowerPAD in these designs can be connected to the PCB ground plane.

Copyright © 2021 Texas Instruments Incorporated

12.2 Layout Example

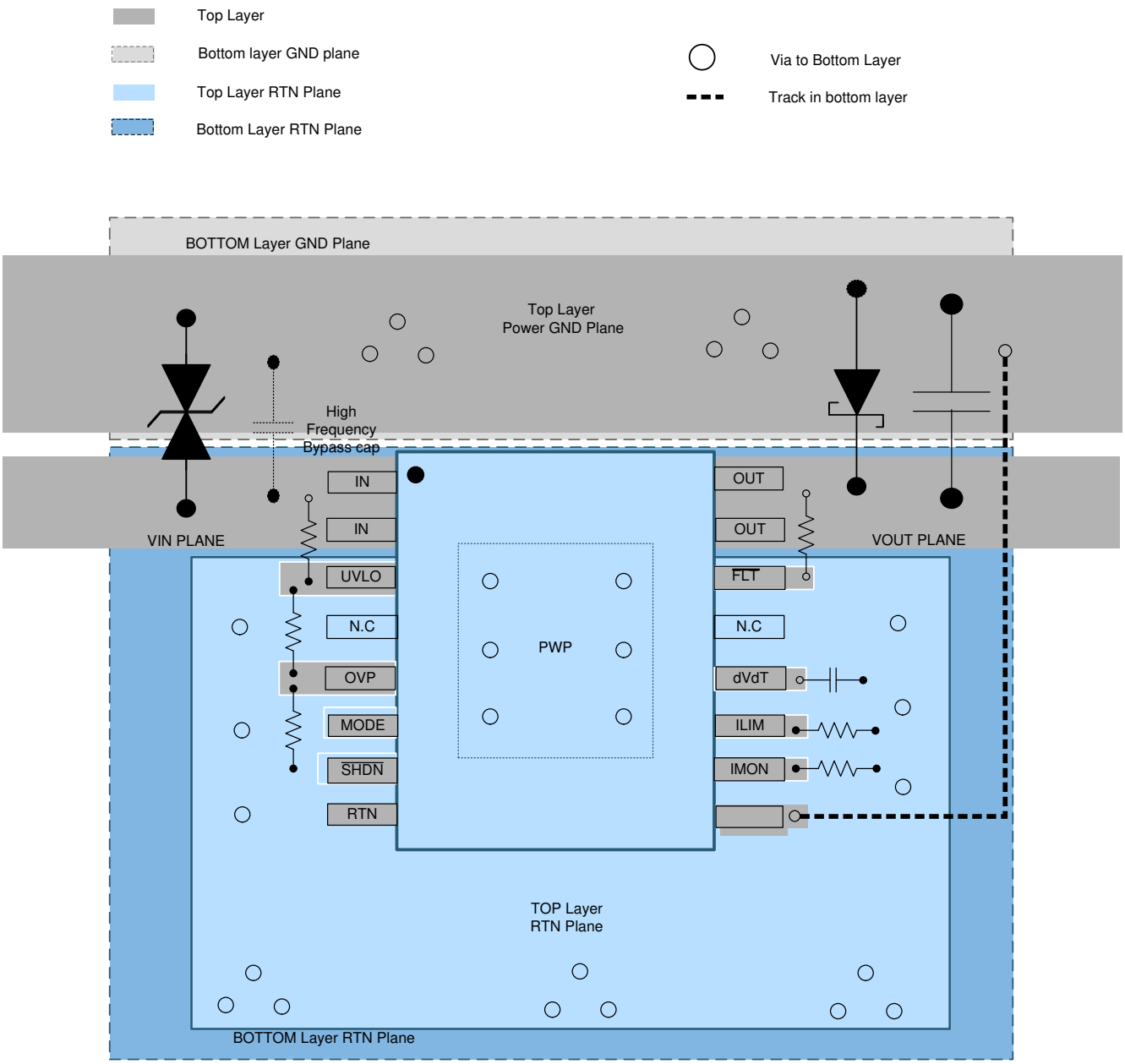

Figure 12-1. Typical PCB Layout Example With HTSSOP Package With a 2 Layer PCB

Copyright © 2021 Texas Instruments Incorporated

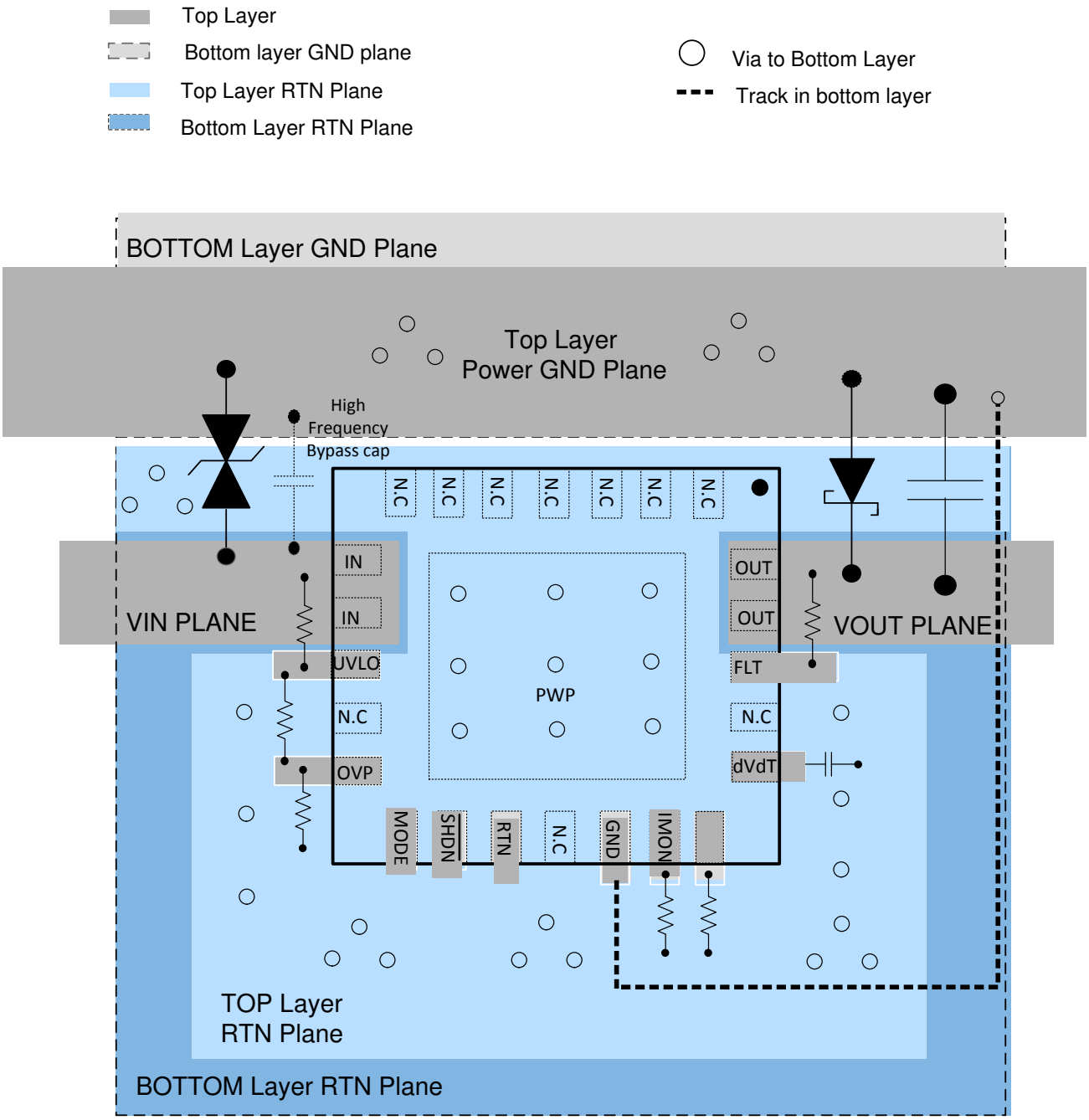

Figure 12-2. Typical PCB Layout Example With VQFN Package With a 2 Layer PCB

13 Device and Documentation Support

TI offers an extensive line of development tools. Tools and software to evaluate the performance of the device, generate code, and develop solutions are listed below.

13.1 Device Support

For TPS26400 PSpice Transient Mode, see SLVMDF4.

For TPS26400 Design Calculator, see SLVRBG7.

13.2 Documentation Support

13.2.1 Related Documentation

For related documentation see the following:

- TPS26400-02EVM: Evaluation Module for TPS26400 User's Guide
- Power Multiplexing Using Load Switches and eFuses

13.3 Receiving Notification of Documentation Updates

To receive notification of documentation updates, navigate to the device product folder on ti.com. Click on *Subscribe to updates* to register and receive a weekly digest of any product information that has changed. For change details, review the revision history included in any revised document.

13.4 Support Resources

TI E2E™ support forums are an engineer's go-to source for fast, verified answers and design help — straight from the experts. Search existing answers or ask your own question to get the quick design help you need.

Linked content is provided "AS IS" by the respective contributors. They do not constitute TI specifications and do not necessarily reflect TI's views; see TI's Terms of Use.

13.5 Trademarks

TI E2E™ is a trademark of Texas Instruments.
All trademarks are the property of their respective owners.

13.6 Electrostatic Discharge Caution



This integrated circuit can be damaged by ESD. Texas Instruments recommends that all integrated circuits be handled with appropriate precautions. Failure to observe proper handling and installation procedures can cause damage.

ESD damage can range from subtle performance degradation to complete device failure. Precision integrated circuits may be more susceptible to damage because very small parametric changes could cause the device not to meet its published specifications.

13.7 Glossary

TI Glossary	This glossary lists and explains terms, acronyms, and definitions.

14 Mechanical, Packaging, and Orderable Information

The following pages include mechanical, packaging, and orderable information. This information is the most current data available for the designated devices. This data is subject to change without notice and revision of this document. For browser-based versions of this data sheet, refer to the left-hand navigation.

Copyright © 2021 Texas Instruments Incorporated

PACKAGING INFORMATION

Orderable part number	Status (1)	Material type (2)	Package | Pins	Package qty | Carrier	RoHS (3)	Lead finish/ Ball material (4)	MSL rating/ Peak reflow (5)	Op temp (°C)	Part marking (6)
TPS26400PWPR	Active	Production	HTSSOP (PWP) | 16	2000 | LARGE T&R	Yes	NIPDAU	Level-2-260C-1 YEAR	-40 to 125	26400
TPS26400PWPR.A	Active	Production	HTSSOP (PWP) | 16	2000 | LARGE T&R	Yes	NIPDAU	Level-2-260C-1 YEAR	-40 to 125	26400
TPS26400PWPRG4	Active	Production	HTSSOP (PWP) | 16	2000 | LARGE T&R	Yes	NIPDAU	Level-2-260C-1 YEAR	-40 to 125	26400
TPS26400PWPRG4.A	Active	Production	HTSSOP (PWP) | 16	2000 | LARGE T&R	Yes	NIPDAU	Level-2-260C-1 YEAR	-40 to 125	26400
TPS26400RHFR	Active	Production	VQFN (RHF) | 24	3000 | LARGE T&R	Yes	NIPDAU	Level-2-260C-1 YEAR	-40 to 125	TPS 26400
TPS26400RHFR.A	Active	Production	VQFN (RHF) | 24	3000 | LARGE T&R	Yes	NIPDAU	Level-2-260C-1 YEAR	-40 to 125	TPS 26400
TPS26400RHFRG4	Active	Production	VQFN (RHF) | 24	3000 | LARGE T&R	Yes	NIPDAU	Level-2-260C-1 YEAR	-40 to 125	TPS 26400
TPS26400RHFRG4.A	Active	Production	VQFN (RHF) | 24	3000 | LARGE T&R	Yes	NIPDAU	Level-2-260C-1 YEAR	-40 to 125	TPS 26400

(1) **Status:** For more details on status, see our product life cycle.

(2) **Material type:** When designated, preproduction parts are prototypes/experimental devices, and are not yet approved or released for full production. Testing and final process, including without limitation quality assurance, reliability performance testing, and/or process qualification, may not yet be complete, and this item is subject to further changes or possible discontinuation. If available for ordering, purchases will be subject to an additional waiver at checkout, and are intended for early internal evaluation purposes only. These items are sold without warranties of any kind.

(3) **RoHS values:** Yes, No, RoHS Exempt. See the TI RoHS Statement for additional information and value definition.

(4) **Lead finish/Ball material:** Parts may have multiple material finish options. Finish options are separated by a vertical ruled line. Lead finish/Ball material values may wrap to two lines if the finish value exceeds the maximum column width.

(5) **MSL rating/Peak reflow:** The moisture sensitivity level ratings and peak solder (reflow) temperatures. In the event that a part has multiple moisture sensitivity ratings, only the lowest level per JEDEC standards is shown. Refer to the shipping label for the actual reflow temperature that will be used to mount the part to the printed circuit board.

(6) **Part marking:** There may be an additional marking, which relates to the logo, the lot trace code information, or the environmental category of the part.

Multiple part markings will be inside parentheses. Only one part marking contained in parentheses and separated by a "~" will appear on a part. If a line is indented then it is a continuation of the previous line and the two combined represent the entire part marking for that device.

Important Information and Disclaimer: The information provided on this page represents TI's knowledge and belief as of the date that it is provided. TI bases its knowledge and belief on information provided by third parties, and makes no representation or warranty as to the accuracy of such information. Efforts are underway to better integrate information from third parties. TI has taken and continues to take reasonable steps to provide representative and accurate information but may not have conducted destructive testing or chemical analysis on incoming materials and chemicals. TI and TI suppliers consider certain information to be proprietary, and thus CAS numbers and other limited information may not be available for release.

In no event shall TI's liability arising out of such information exceed the total purchase price of the TI part(s) at issue in this document sold by TI to Customer on an annual basis.

TAPE AND REEL INFORMATION

REEL DIMENSIONS

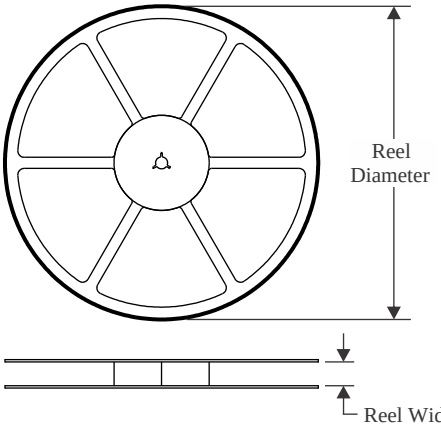

TAPE DIMENSIONS

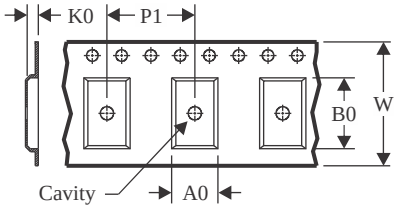

A0	Dimension designed to accommodate the component width
B0	Dimension designed to accommodate the component length
K0	Dimension designed to accommodate the component thickness
W	Overall width of the carrier tape
P1	Pitch between successive cavity centers

QUADRANT ASSIGNMENTS FOR PIN 1 ORIENTATION IN TAPE

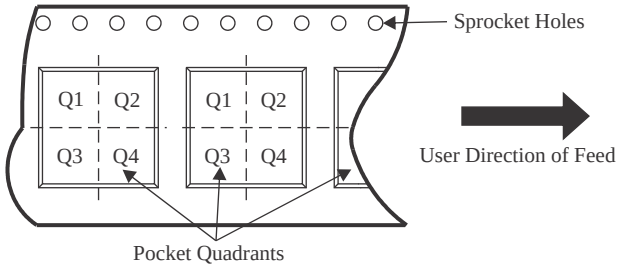

*All dimensions are nominal

Device	Package Type	Package Drawing	Pins	SPQ	Reel Diameter (mm)	Reel Width W1 (mm)	A0 (mm)	B0 (mm)	K0 (mm)	P1 (mm)	W (mm)	Pin1 Quadrant
TPS26400PWPR	HTSSOP	PWP	16	2000	330.0	12.4	6.9	5.6	1.6	8.0	12.0	Q1
TPS26400PWPRG4	HTSSOP	PWP	16	2000	330.0	12.4	6.9	5.6	1.6	8.0	12.0	Q1
TPS26400RHFR	VQFN	RHF	24	3000	330.0	12.4	4.3	5.3	1.3	8.0	12.0	Q1
TPS26400RHFRG4	VQFN	RHF	24	3000	330.0	12.4	4.3	5.3	1.3	8.0	12.0	Q1

TAPE AND REEL BOX DIMENSIONS

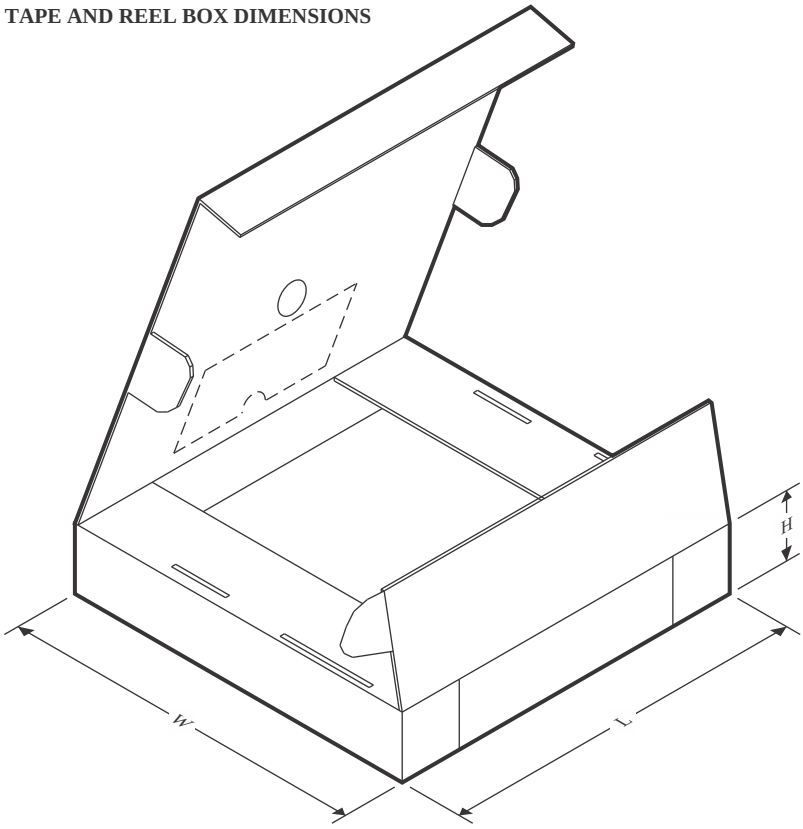

*All dimensions are nominal

Device	Package Type	Package Drawing	Pins	SPQ	Length (mm)	Width (mm)	Height (mm)
TPS26400PWPR	HTSSOP	PWP	16	2000	350.0	350.0	43.0
TPS26400PWPRG4	HTSSOP	PWP	16	2000	350.0	350.0	43.0
TPS26400RHFR	VQFN	RHF	24	3000	360.0	360.0	36.0
TPS26400RHFRG4	VQFN	RHF	24	3000	367.0	367.0	35.0

PACKAGE OUTLINE

RHF0024A

VQFN - 1 mm max height

PLASTIC QUAD FLATPACK - NO LEAD

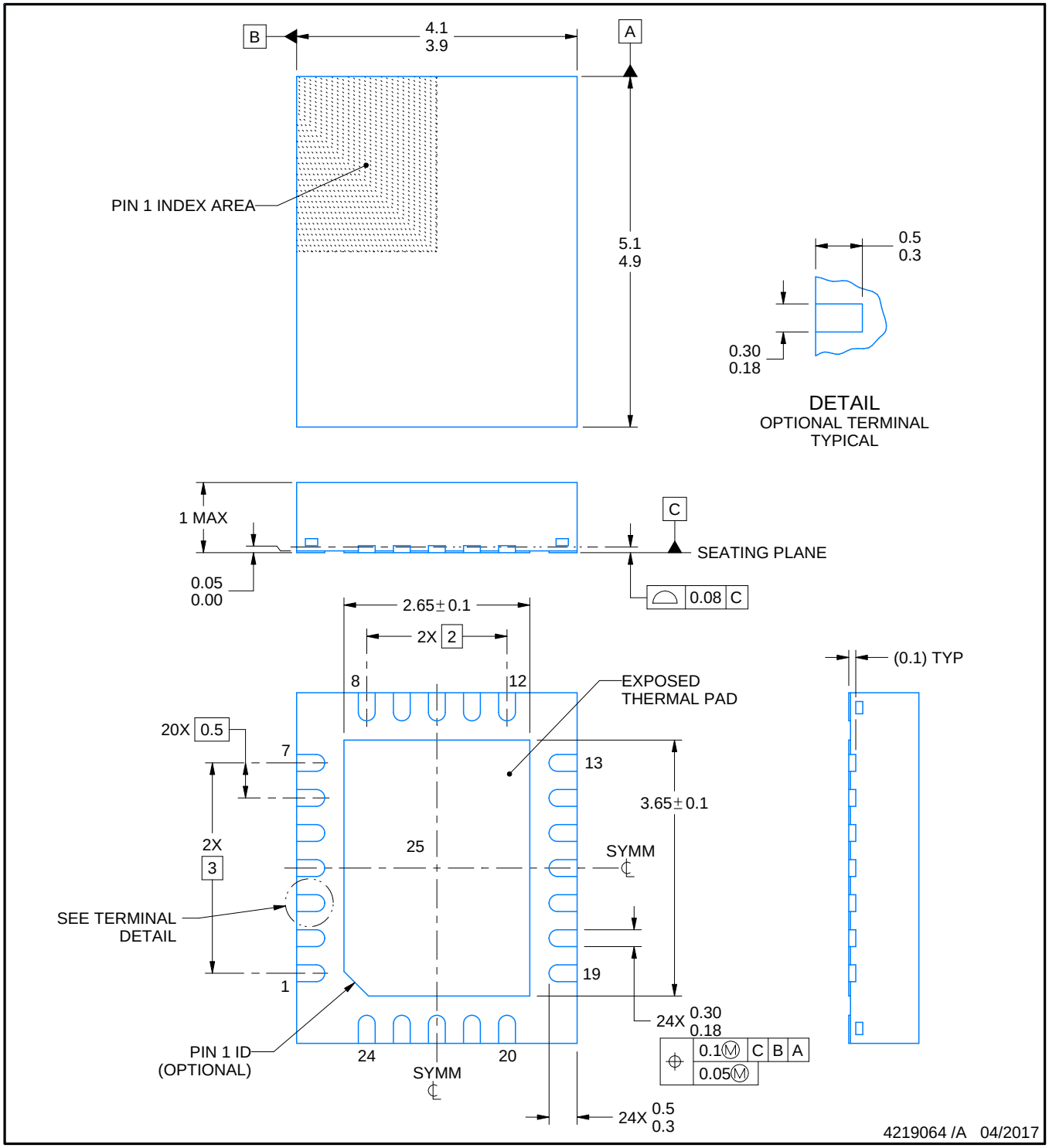

NOTES:

1. All linear dimensions are in millimeters. Any dimensions in parenthesis are for reference only. Dimensioning and tolerancing per ASME Y14.5M.
2. This drawing is subject to change without notice.
3. The package thermal pad must be soldered to the printed circuit board for thermal and mechanical performance.

EXAMPLE BOARD LAYOUT

RHF0024A

VQFN - 1 mm max height

PLASTIC QUAD FLATPACK - NO LEAD

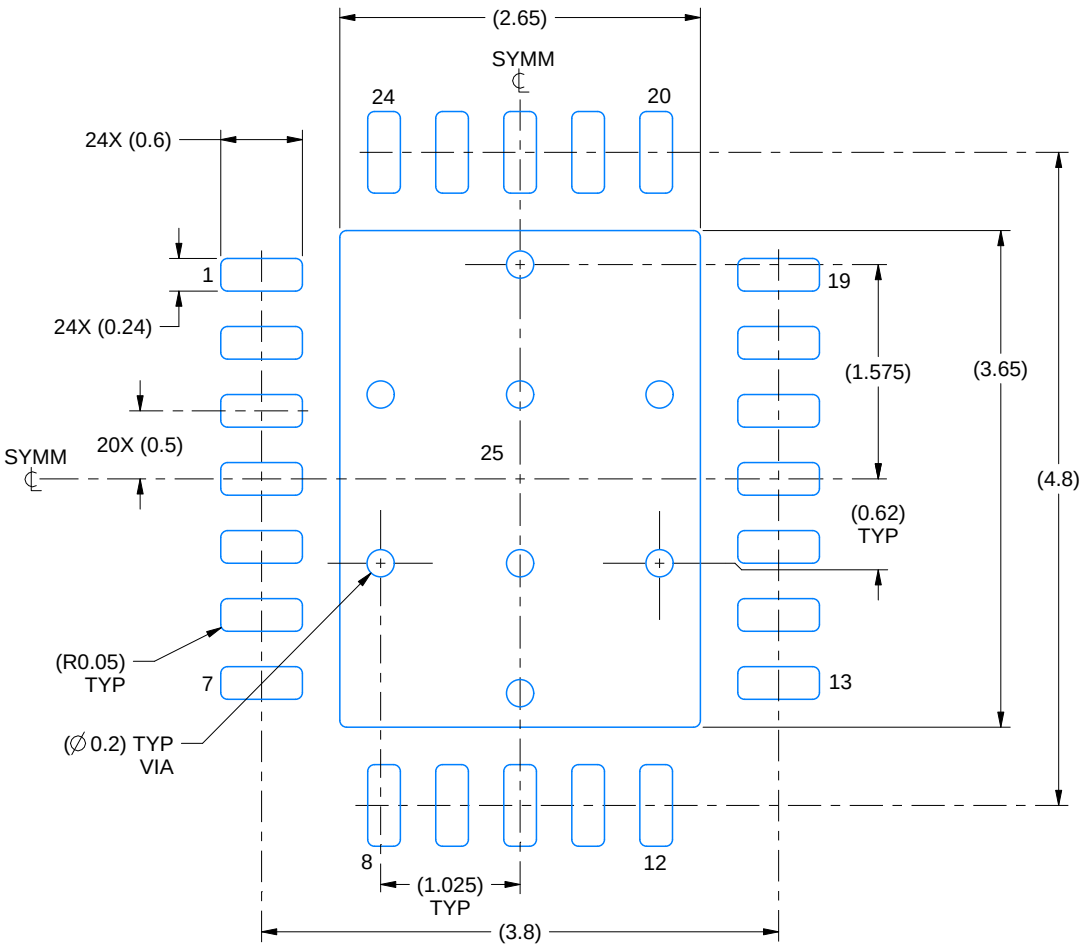

LAND PATTERN EXAMPLE
EXPOSED METAL SHOWN
SCALE:18X

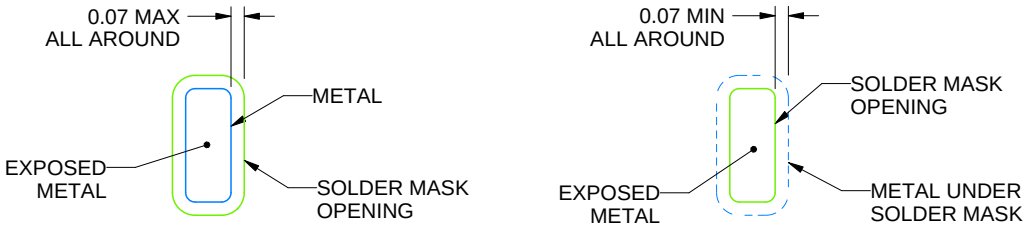

SOLDER MASK DETAILS

4219064 /A 04/2017

NOTES: (continued)

4. This package is designed to be soldered to a thermal pad on the board. For more information, see Texas Instruments literature number SLUA271 (www.ti.com/lit/slua271).
5. Vias are optional depending on application, refer to device data sheet. If any vias are implemented, refer to their locations shown on this view. It is recommended that vias under paste be filled, plugged or tented.

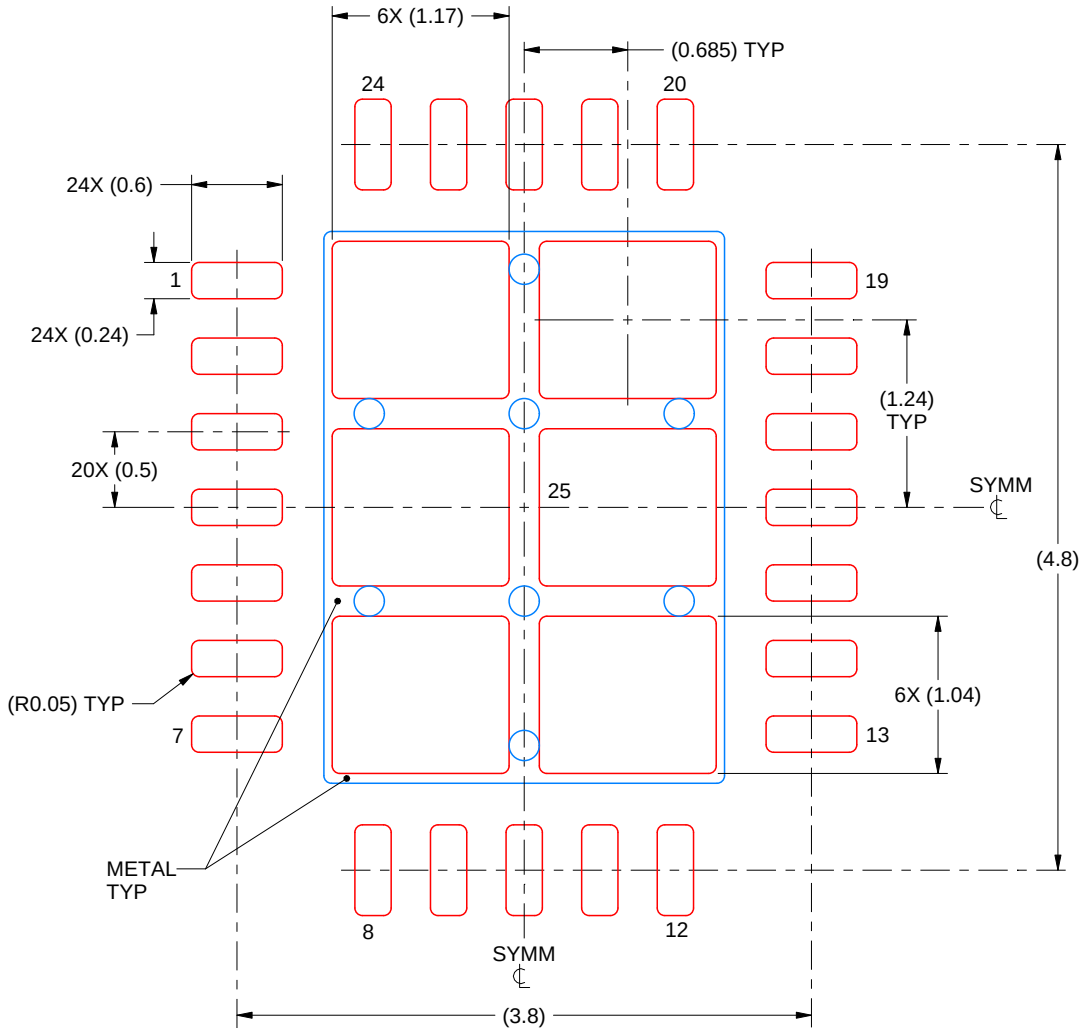

SOLDER PASTE EXAMPLE
BASED ON 0.125 mm THICK STENCIL

EXPOSED PAD 25
75% PRINTED SOLDER COVERAGE BY AREA UNDER PACKAGE
SCALE:20X

4219064 /A 04/2017

NOTES: (continued)

6. Laser cutting apertures with trapezoidal walls and rounded corners may offer better paste release. IPC-7525 may have alternate design recommendations.

PWP 16 PowerPAD™ TSSOP - 1.2 mm max height

PLASTIC SMALL OUTLINE

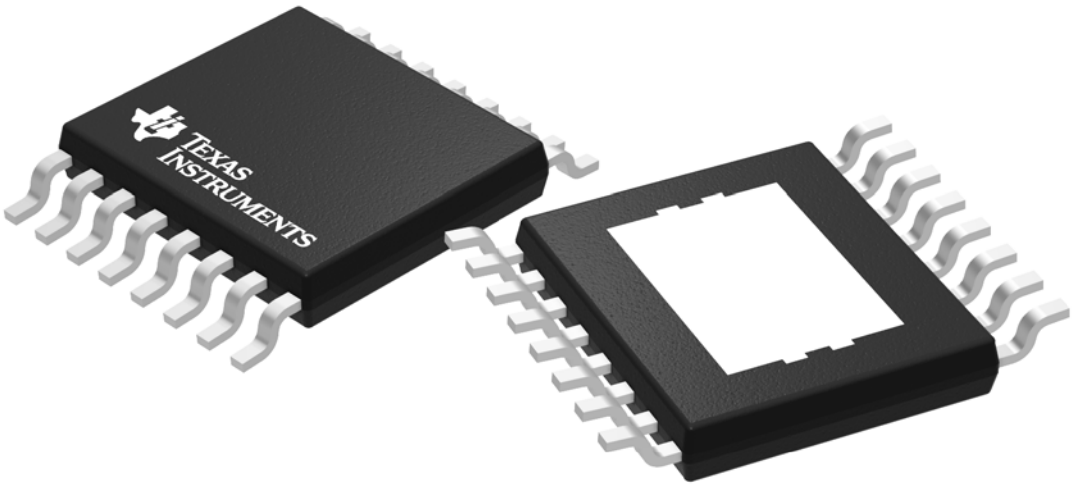

Images above are just a representation of the package family, actual package may vary.
Refer to the product data sheet for package details.

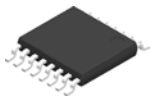

PACKAGE OUTLINE

PWP0016A

PowerPAD ™ HTSSOP - 1.2 mm max height

PLASTIC SMALL OUTLINE

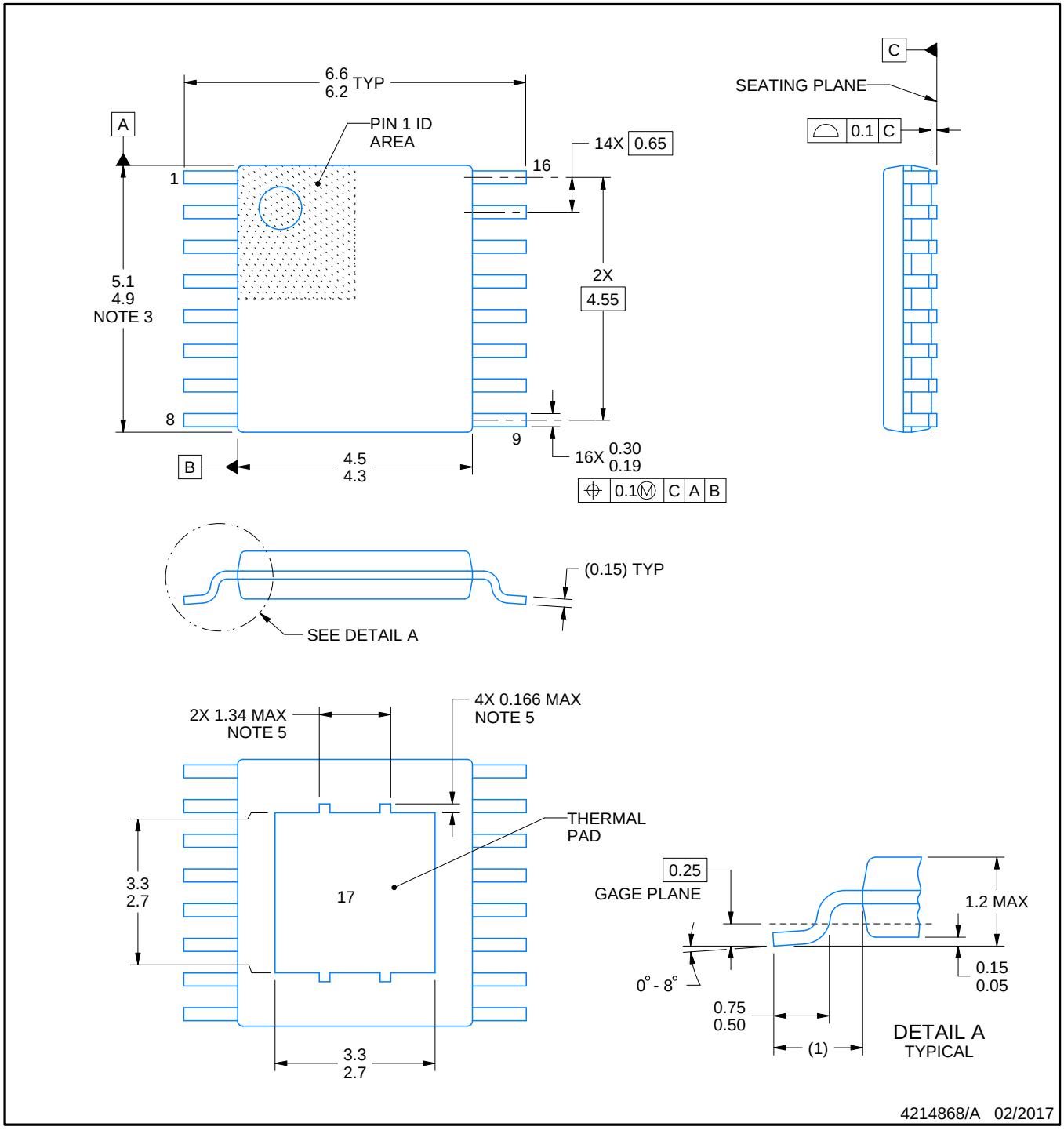

PowerPAD is a trademark of Texas Instruments.

NOTES:

1. All linear dimensions are in millimeters. Any dimensions in parenthesis are for reference only. Dimensioning and tolerancing per ASME Y14.5M.
2. This drawing is subject to change without notice.
3. This dimension does not include mold flash, protrusions, or gate burrs. Mold flash, protrusions, or gate burrs shall not exceed 0.15 mm per side.
4. Reference JEDEC registration MO-153.
5. Features may not be present.

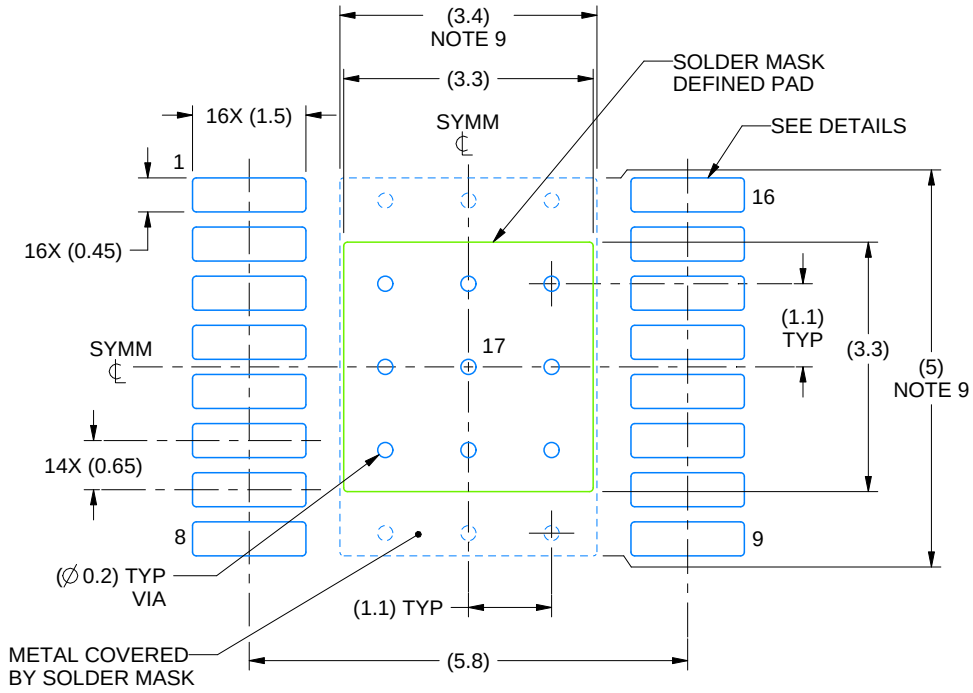

LAND PATTERN EXAMPLE
EXPOSED METAL SHOWN
SCALE:10X

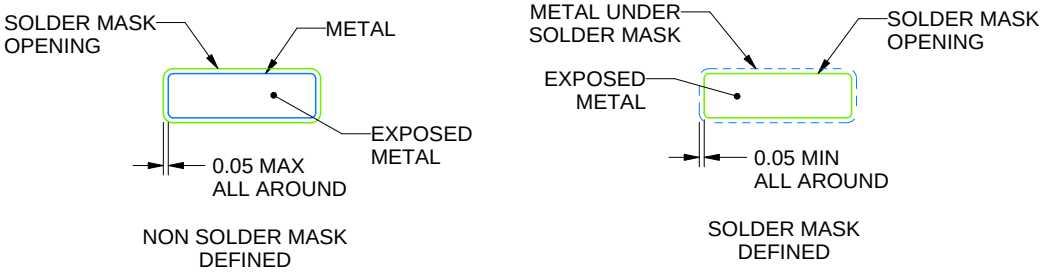

SOLDER MASK DETAILS
PADS 1-16

4214868/A 02/2017

NOTES: (continued)

6. Publication IPC-7351 may have alternate designs.
7. Solder mask tolerances between and around signal pads can vary based on board fabrication site.
8. This package is designed to be soldered to a thermal pad on the board. For more information, see Texas Instruments literature numbers SLMA002 (www.ti.com/lit/slma002) and SLMA004 (www.ti.com/lit/slma004).
9. Size of metal pad may vary due to creepage requirement.

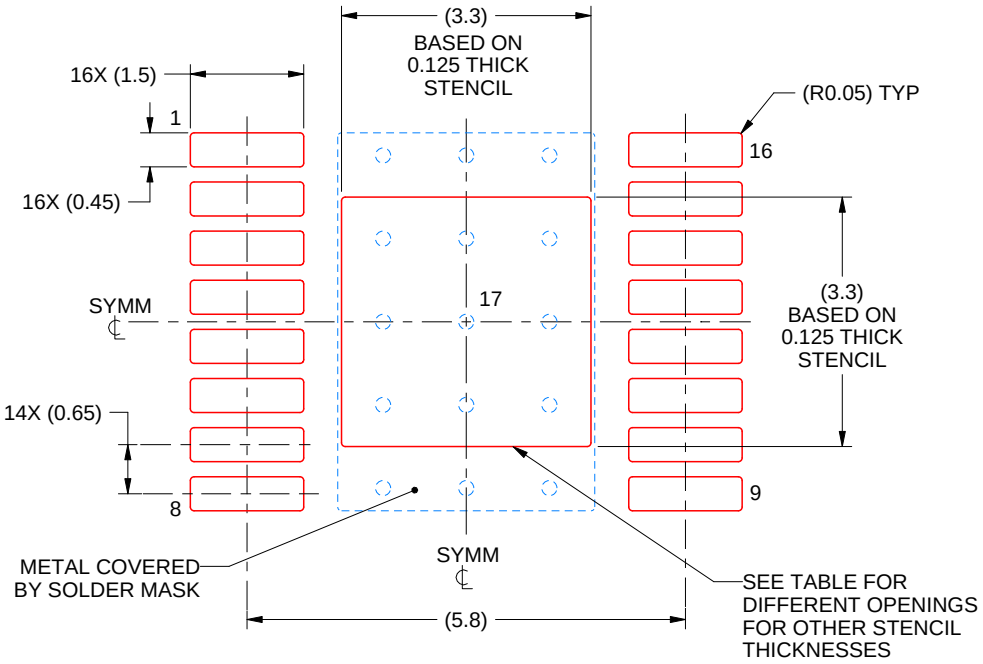

SOLDER PASTE EXAMPLE
EXPOSED PAD
100% PRINTED SOLDER COVERAGE BY AREA
SCALE:10X

STENCIL THICKNESS	SOLDER STENCIL OPENING
0.1	3.69 X 3.69
0.125	3.3 X 3.3 (SHOWN)
0.15	3.01 X 3.01
0.175	2.79 X 2.79

4214868/A 02/2017

NOTES: (continued)

10. Laser cutting apertures with trapezoidal walls and rounded corners may offer better paste release. IPC-7525 may have alternate design recommendations.
11. Board assembly site may have different recommendations for stencil design.

IMPORTANT NOTICE AND DISCLAIMER

TI PROVIDES TECHNICAL AND RELIABILITY DATA (INCLUDING DATASHEETS), DESIGN RESOURCES (INCLUDING REFERENCE DESIGNS), APPLICATION OR OTHER DESIGN ADVICE, WEB TOOLS, SAFETY INFORMATION, AND OTHER RESOURCES “AS IS” AND WITH ALL FAULTS, AND DISCLAIMS ALL WARRANTIES, EXPRESS AND IMPLIED, INCLUDING WITHOUT LIMITATION ANY IMPLIED WARRANTIES OF MERCHANTABILITY, FITNESS FOR A PARTICULAR PURPOSE OR NON-INFRINGEMENT OF THIRD PARTY INTELLECTUAL PROPERTY RIGHTS.

These resources are intended for skilled developers designing with TI products. You are solely responsible for (1) selecting the appropriate TI products for your application, (2) designing, validating and testing your application, and (3) ensuring your application meets applicable standards, and any other safety, security, regulatory or other requirements.

These resources are subject to change without notice. TI grants you permission to use these resources only for development of an application that uses the TI products described in the resource. Other reproduction and display of these resources is prohibited. No license is granted to any other TI intellectual property right or to any third party intellectual property right. TI disclaims responsibility for, and you fully indemnify TI and its representatives against any claims, damages, costs, losses, and liabilities arising out of your use of these resources.

TI’s products are provided subject to TI’s Terms of Sale, TI’s General Quality Guidelines, or other applicable terms available either on ti.com or provided in conjunction with such TI products. TI’s provision of these resources does not expand or otherwise alter TI’s applicable warranties or warranty disclaimers for TI products. Unless TI explicitly designates a product as custom or customer-specified, TI products are standard, catalog, general purpose devices.

TI objects to and rejects any additional or different terms you may propose.

Copyright © 2026, Texas Instruments Incorporated

Last updated 10/2025

ENTEGRECİ

Bu belge www.entegreci.com üzerinden sunulmaktadır.

Elektronik komponent tedarikinde Entegreci

Entegreci, Eskişehir merkezli, Türkiye geneline satış yapan bir elektronik komponent mağazasıdır. Entegreler (IC), mikrodenetleyiciler, transistörler, diyotlar, pasif elemanlar, konnektörler, modüller ve geliştirme kartları tek adetten seri üretim adetlerine kadar satılır. Ürün sayfalarında güncel stok durumunu, fiyatı ve datasheet bağlantısını bulabilirsiniz.

Parça koduyla arama

Üretici parça numarasını yazın; stok ve fiyatı hemen görün.

www.entegreci.com

Ürün kategorileri

Entegreden kapasitöre tüm elektronik komponent kategorileri.

Kategorilere göz atın

Üreticiler

Aradığınız üreticinin ürünlerini tek sayfada inceleyin.

Üreticileri görün

Toplu alım ve teklif

Listede olmayan ya da yüksek adetli parçalar için teklif isteyin.

Teklif isteyin

www.entegreci.com | **destek@entegreci.com** | **0850 305 90 34**

Entegreci is an online electronic components store based in Türkiye. Search by manufacturer part number to see stock, prices and datasheets for integrated circuits, microcontrollers, transistors, passive components and connectors, or request a quote for parts that are not listed.

Bu sayfa Entegreci tarafından eklenmiştir. Belgenin önceki sayfaları asıl yayıncısına aittir ve içeriği değiştirilmemiştir; en güncel sürüm için belgenin yayıncısına başvurun.