TPS25984x 4.5V–16V, 0.8mΩ, 70A Stackable eFuse With Accurate and Fast Current Monitor

1 Features

- Input operating voltage range: 4.5V to 16V
  - Absolute maximum: 20V
  - Withstands 23.5V for 10µs
  - Withstands negative voltages up to –1V at output
- Integrated FET with ultra-low on-resistance: 0.8mΩ (typical)
- Rated for RMS current of 55A and peak current of 70A
- Supports parallel connection of multiple eFuses for higher current support
  - Active device state synchronization and load sharing during start-up and steady-state
- Robust overcurrent protection
  - Adjustable overcurrent threshold (I_{OCP}): 10A to 55A with accuracy of ±5%
  - Circuit-breaker response during steady state operation with adjustable transient overcurrent timer (ITIMER) to support peak currents up to 2 × I_{OCP}
  - Adjustable active current limit during start-up (I_{LIM})
- Robust short-circuit protection
  - Fast-trip response (< 200ns) to output short-circuit events
  - Adjustable threshold (2 × I_{OCP})
  - Immune to supply line transients — no nuisance tripping
- Precise analog load current monitoring
  - Accuracy: ±1.4%
  - Bandwidth: >500kHz
- Fast overvoltage protection (fixed 16.7V threshold)
- Adjustable output slew rate control (dVdt) for inrush current protection
- Active high enable input with adjustable undervoltage lockout (UVLO)
- Overtemperature protection (OTP) to ensure FET SOA
  - FET SOA: 10W√s
- Integrated FET health monitoring and reporting
- Analog die temperature monitor output (TEMP)
- Dedicated fault indication pin ($\overline{FLT}$)
- Power-Good indication pin (PG)
- Small footprint: QFN 5mm × 5mm
- 100% Pb free

2 Applications

- Input hotswap and hotplug
- Server and high performance computing
- Network interface cards
- Graphics and Hardware accelerator cards
- Data center switches and routers
- Fan trays

3 Description

The TPS25984x is an integrated, high-current circuit protection and power management solution in a small package. The device provides multiple protection modes using very few external components and is a robust defense against overloads, short circuits, and excessive inrush current.

Applications with particular inrush current requirements can set the output slew rate with a single external capacitor. Output current limit level can be set by user as per system needs. A user adjustable overcurrent blanking timer allows systems to support transient peaks in the load current without tripping the eFuse.

Package Information

PART NUMBER	PACKAGE(1)	PACKAGE SIZE(2)
TPS259840RZJ	RZJ (QFN, 32)	5mm × 5mm
TPS259841RZJ		

(1) For all available packages, see the orderable addendum at the end of the data sheet.
(2) The package size (length × width) is a nominal value and includes pins, where applicable.

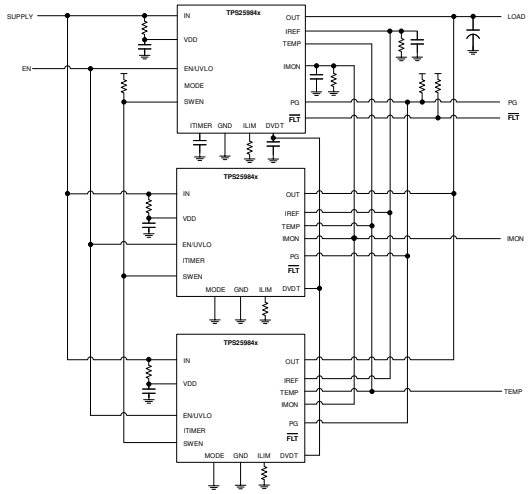

Simplified Schematic

An IMPORTANT NOTICE at the end of this data sheet addresses availability, warranty, changes, use in safety-critical applications, intellectual property matters and other important disclaimers. PRODUCTION DATA.

Table of Contents

1 Features....1
2 Applications....1
3 Description....1
4 Description (continued)....3
5 Pin Configuration and Functions....4
6 Specifications....6
6.1 Absolute Maximum Ratings....6
6.2 ESD Ratings....6
6.3 Recommended Operating Conditions....7
6.4 Thermal Information....7
6.5 Electrical Characteristics....8
6.6 Logic Interface....10
6.7 Timing Requirements....10
6.8 Switching Characteristics....11
6.9 Typical Characteristics....12
7 Detailed Description....18
7.1 Overview....18
7.2 Functional Block Diagram....19
7.3 Feature Description....20
7.4 Device Functional Modes....37
8 Application and Implementation....39
8.1 Application Information....39
8.2 Typical Application: 12-V, 3.3-kW Power Path Protection in Data Center Servers....48
8.3 Best Design Practices....56
8.4 Power Supply Recommendations....56
8.5 Layout....58
9 Device and Documentation Support....60
9.1 Documentation Support....60
9.2 Support Resources....60
9.3 Trademarks....60
9.4 Electrostatic Discharge Caution....60
9.5 Glossary....60
10 Revision History....60
11 Mechanical, Packaging, and Orderable Information....61

Copyright © 2025 Texas Instruments Incorporated

4 Description (continued)

Multiple TPS25984x devices can be connected in parallel to increase the total current capacity for high power systems. All devices actively synchronize their operating state and share current during start-up as well as steady state to avoid over-stressing some of the devices which can result in premature or partial shutdown of the parallel chain.

An integrated fast and accurate sense analog load current monitor facilitates predictive maintenance and advanced dynamic platform power management techniques such as Intel® PSYS and PROCHOT™ to maximize system throughput and power supply utilization.

The devices are characterized for operation over a junction temperature range of –40°C to +125°C.

Copyright © 2025 Texas Instruments Incorporated

5 Pin Configuration and Functions

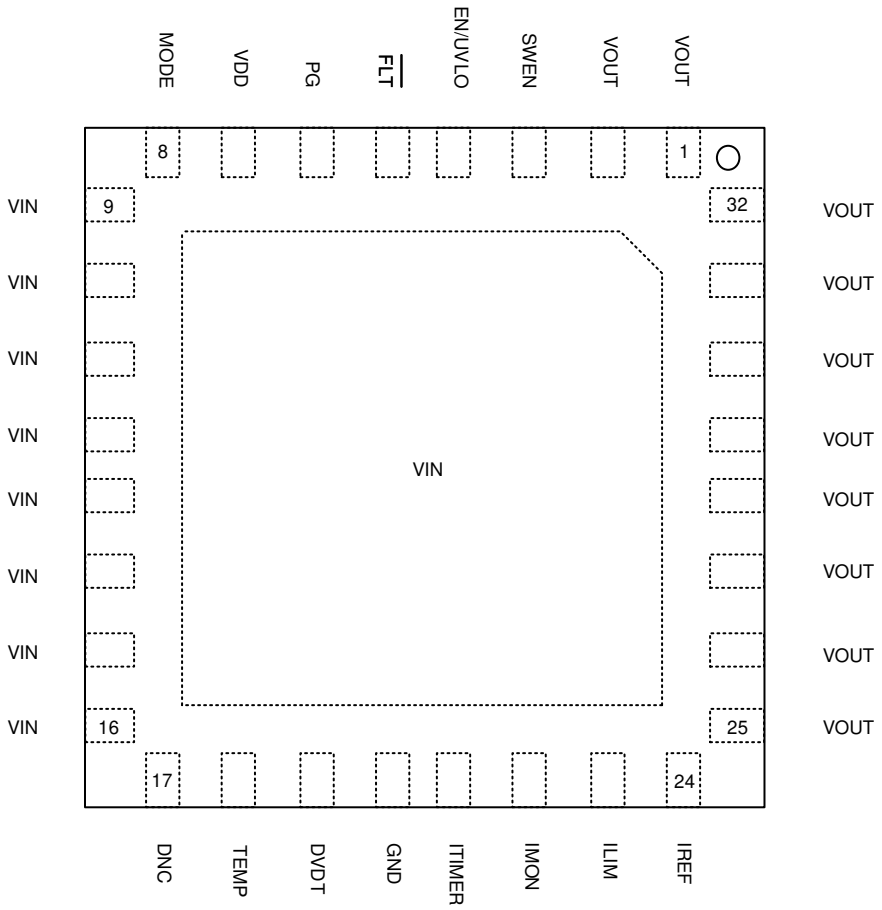

Figure 5-1. TPS25984x RZJ Package 32-pin QFN Top View

Table 5-1. Pin Functions

PIN		TYPE	DESCRIPTION
NAME	NO.		
OUT	1, 2, 25, 26, 27, 28, 29, 30, 31, 32	O	Power output. Must be soldered to output power plane uniformly to ensure proper heat dissipation and to maintain optimal current distribution through the device.
SWEN	3	I/O	Open-drain signal to indicate and control power switch ON/OFF status. This pin facilitates active synchronization between multiple devices in a parallel chain. This pin must be pulled up externally to a logic level supply. *Do not leave floating.*
EN/UVLO	4	I	Active high enable input. Connect resistor divider from input supply to set the undervoltage threshold. *Do not leave floating.*
$\overline{\text{FLT}}$	5	O	Open-drain active low fault indication.
PG	6	I/O	Open-drain active high Power Good indication. This pin must be pulled up externally to a logic level supply. *Do not leave floating.*
VDD	7	P	Controller power input pin. Can be used to power the internal control circuitry with a filtered and stable supply which is not affected by system transients. Connect this pin to VIN through a series resistor and add a decoupling capacitor to GND.
MODE	8	I	MODE selection pin. Leave the pin floating for standalone or primary mode of operation. Connect the pin to GND to configure device as a secondary device in a parallel chain.

Copyright © 2025 Texas Instruments Incorporated

Table 5-1. Pin Functions (continued)

PIN		TYPE	DESCRIPTION
NAME	NO.		
IN	9, 10, 11, 12, 13, 14, 15, 16, Exposed Pad	P	Power input. Must be soldered to input power plane uniformly to ensure proper heat dissipation and to maintain optimal current distribution through the device.
DNC	17	X	Do not connect anything to this pin.
TEMP	18	O	Die junction temperature monitor analog voltage output. Can be tied together with TEMP outputs of multiple devices in a parallel configuration to indicate the peak temperature of the chain.
DVDT	19	O	Start-up output slew rate control pin. Leave this pin open to allow fastest start-up. Connect capacitor to ground to slow down the slew rate to manage inrush current.
GND	20	G	Device ground reference pin. Connect to system ground.
ITIMER	21	O	A capacitor from this pin to GND sets the overcurrent blanking interval during which the output current can temporarily exceed the overcurrent threshold (but lower than fast-trip threshold) during steady-state operation before the device overcurrent response takes action.
IMON	22	O	An external resistor from this pin to GND sets the overcurrent protection threshold and fast-trip threshold during steady-state. This pin also acts as a fast and accurate analog output load current monitor signal during steady-state. *Do not leave floating.*
ILIM	23	O	An external resistor from this pin to GND sets the current limit threshold and fast-trip threshold during start-up. This also sets the active current sharing threshold during steady-state. *Do not leave floating.*
IREF	24	I/O	Reference voltage for overcurrent, short-circuit protection and active current sharing blocks. Can be generated using internal current source and resistor on this pin, or can be driven from external voltage source. *Do not leave floating.*

Copyright © 2025 Texas Instruments Incorporated

6 Specifications

6.1 Absolute Maximum Ratings

over operating free-air temperature range (unless otherwise noted)(1)

Parameter		Pin	MIN	MAX	UNIT
V_{INMAX}	Maximum Input Voltage Range	IN	–0.3	20	V
$V_{INMAX,PLS}$	Maximum Input Voltage Range (10 µs, T_A ≥ 0 °C)	IN	–0.3	Min(23.5, V_{OUT} + 23)	V
V_{DDMAX}	Maximum Supply Voltage Range	VDD	–0.3	20	V
V_{OUTMAX}	Maximum Output Voltage Range	OUT	–1	Min(20, V_{IN} + 0.3)	
$V_{IREFMAX}$	Maximum IREF Pin Voltage Range	IREF		5.5	V
$V_{DVDTMAX}$	Maximum DVDT Pin Voltage Range	DVDT		5.5	V
$V_{MODEMAX}$	Maximum MODE Pin Voltage Range	MODE	Internally Limited		V
$V_{SWENMAX}$	Maximum SWEN Pin Voltage Range	SWEN		5.5	V
$I_{SWENMAX}$	Maximum SWEN Pin Sink Current	SWEN		10	mA
V_{ENMAX}	Maximum Enable Pin Voltage Range	EN/UVLO		20	V
$V_{FLTBMAX}$	Maximum $\overline{FLT}$ Pin Voltage Range	$\overline{FLT}$		5.5	V
$I_{FLTBMAX}$	Maximum $\overline{FLT}$ Pin Sink Current	$\overline{FLT}$		10	mA
V_{PGMAX}	Maximum PG Pin Voltage Range	PG		5.5	V
I_{PGMAX}	Maximum PG Pin Sink Current	PG		10	mA
$V_{TEMPMAX}$	Maximum TEMP Pin Voltage Range	TEMP		5.5	V
$V_{ILIMMAX}$	Maximum ILIM pin voltage	ILIM	Internally Limited		V
$V_{IMONMAX}$	Maximum IMON pin voltage	IMON	Internally Limited		V
$V_{ITIMERMAX}$	Maximum ITIMER pin voltage	ITIMER	Internally Limited		V
I_{MAX}	Maximum Continuous Switch Current	IN to OUT	Internally Limited		A
T_{JMAX}	Junction temperature		Internally Limited		°C
T_{LEAD}	Maximum Soldering Temperature			300	°C
T_{STG}	Storage temperature		–65	150	°C

(1) Operation outside the Absolute Maximum Ratings may cause permanent device damage. Absolute Maximum Ratings do not imply functional operation of the device at these or any other conditions beyond those listed under Recommended Operating Conditions. If used outside the Recommended Operating Conditions but within the Absolute Maximum Ratings, the device may not be fully functional, and this may affect device reliability, functionality, performance, and shorten the device lifetime.

6.2 ESD Ratings

			VALUE	UNIT
$V_{(ESD)}$	Electrostatic discharge	Human body model (HBM), per ANSI/ESDA/JEDEC JS-001(1)	±2000	V
		Charged device model (CDM), per ANSI/ESDA/JEDEC JS-002(2)	±500	

(1) JEDEC document JEP155 states that 500-V HBM allows safe manufacturing with a standard ESD control process.
(2) JEDEC document JEP157 states that 250-V CDM allows safe manufacturing with a standard ESD control process.

Copyright © 2025 Texas Instruments Incorporated

6.3 Recommended Operating Conditions

over operating free-air temperature range (unless otherwise noted)

Parameter		Pin	MIN	MAX	UNIT
V_{IN}	Input Voltage Range	IN	4.5	16	V
V_{DD}	Supply Voltage Range	VDD	4.5	16	V
V_{OUT}	Output Voltage Range	OUT	0	V_{IN}	V
$V_{EN/UVLO}$	Enable Pin Voltage Range	EN/UVLO	0	Min(V_{DD} + 1 V, V_{IN} + 1 V)	V
V_{DVDT}	DVDT Pin Cap Voltage Rating	DVDT	4		V
V_{PG}	PG Pin Pull-up Voltage Range	PG	0	5	V
V_{FLTB}	$\overline{FLT}$ Pin Pull-up Voltage Range	$\overline{FLT}$	0	5	V
V_{SWEN}	SWEN Pin Pull-up Voltage Range	SWEN	2.5	5	V
V_{ITIMER}	ITIMER Pin Cap Voltage Rating	ITIMER	4		V
V_{IREF}	IREF Pin Voltage Range	IREF	0.3	1.2	V
V_{ILIM}	ILIM Pin Voltage Range	ILIM	0	0.4	V
V_{IMON}	IMON Pin Voltage Range	IMON	0	1.2	V
I_{MAX}	RMS Switch Current, $T_J \leq 125°C$	IN to OUT	0	55	A
$I_{MAX, PLS}$	Peak Switch Current, $T_J \leq 125°C$	IN to OUT	0	70	A
T_J	Junction temperature		–40	125	°C

6.4 Thermal Information

THERMAL METRIC[1] [2]		TPS25984X RZJ (QFN) 32 PINS	UNIT
$R_{\theta JA(eff)}$	Junction-to-ambient thermal resistance (effective)	16.5[2]	°C/W
		25.2[3]	°C/W
$\Psi_{JT(eff)}$	Junction-to-top characterization parameter (effective)	0.3[2] [3]	°C/W
$\Psi_{JB(eff)}$	Junction-to-board characterization parameter (effective)	4.4[2]	°C/W
		4.9[3]	°C/W

(1) For more information about traditional and new thermal metrics, see the Semiconductor and IC Package Thermal Metrics application report.
(2) Based on simulations conducted with the device mounted on a custom 8-layer PCB (4s4p) with 9 thermal vias under the device
(3) Based on simulations conducted with the device mounted on a JEDEC 4-layer PCB (2s2p) with 9 thermal vias under the device

Copyright © 2025 Texas Instruments Incorporated

6.5 Electrical Characteristics

(Test conditions unless otherwise noted) –40°C ≤ T_J ≤ 125°C, V_{IN} = 12 V, VDD = 12 V, OUT = Open, $V_{EN/UVLO}$ = 2 V, SWEN = 10 kΩ pull-up to 5 V, R_{ILIM} = 550 Ω, R_{IMON} = 1100 Ω, V_{IREF} = 1 V, DVDT = Open, ITIMER = Open, $\overline{FLT}$ = 10 kΩ pull-up to 5 V, PG = 10 kΩ pull-up to 5 V, TEMP = Open, MODE = Open. All voltages referenced to GND.

PARAMETER		TEST CONDITIONS	MIN	TYP	MAX	UNIT
INPUT SUPPLY (VDD)						
V_{DD}	VDD input operating voltage range		4.5		16	V
$I_{QON(VDD)}$	VDD ON state quiescent current	V_{VDD} > $V_{UVP(R)}$, V_{EN} ≥ $V_{UVLO(R)}$		0.4	0.55	mA
$I_{QOFF(VDD)}$	VDD OFF state current	V_{EN} < $V_{UVLO(F)}$			240	µA
$V_{UVP(R)}$	VDD undervoltage protection threshold	VDD Rising	4.03	4.20	4.38	V
$V_{UVP(F)}$	VDD undervoltage protection threshold	VDD Falling	3.80	4.05	4.24	V
INPUT SUPPLY (IN)						
V_{IN}	VIN input operating voltage range		4.5		16	V
$V_{UVPIN(R)}$	V_{IN} undervoltage protection threshold	V_{IN} Rising	4.00	4.25	4.50	V
$V_{UVPIN(F)}$	V_{IN} undervoltage protection threshold	V_{IN} Falling	3.90	4.15	4.40	V
$I_{QON(IN)}$	IN ON state quiescent current	V_{EN} ≥ $V_{UVLO(R)}$		3.2	4.4	mA
$I_{QOFF(IN)}$	IN OFF state current	V_{EN} < $V_{UVLO(F)}$			400	µA
ENABLE / UNDERVOLTAGE LOCKOUT (EN/UVLO)						
$V_{UVLO(R)}$	EN/UVLO pin voltage rising threshold for turning on	EN/UVLO Rising	1.12	1.20	1.28	V
$V_{UVLO(F)}$	EN/UVLO pin voltage falling threshold for turning off and engaging output discharge (primary device)	EN/UVLO Falling, MODE = Open	1.02	1.10	1.18	V
	EN/UVLO pin voltage threshold for turning off and engaging QOD (secondary device)	EN/UVLO Falling, MODE = GND	0.92	0.99	1.08	V
$V_{SD(F)}$	EN/UVLO pin voltage threshold for entering full shutdown	EN/UVLO Falling	0.5	0.8		V
I_{ENLKG}	EN/UVLO pin leakage current		–0.1		0.1	µA
OVERVOLTAGE PROTECTION (IN)						
$V_{OVP(R)}$	Input overvoltage protection threshold (rising)	V_{IN} rising	16.1	16.7	17.1	V
$V_{OVP(F)}$	Input overvoltage protection threshold (falling)	V_{IN} falling	15.9	16.6	16.9	V
ON-RESISTANCE (IN - OUT)						
R_{ON}	ON resistance	I_{OUT} = 8 A, T_J = 25°C		0.80	1.13	mΩ
		I_{OUT} = 8 A, T_J = –40 to 125°C			1.5	mΩ
OVERCURRENT PROTECTION REFERENCE (IREF)						
I_{IREF}	IREF pin internal sourcing current		24.30	24.99	25.68	µA
CURRENT LIMIT (ILIM)						
$G_{ILIM(LIN)}$	ILIM current monitor gain (ILIM:IOUT)		17.77	18.13	18.41	µA/A
$CL_{REF(SAT)\%}$	Ratio of start-up current limit threshold (ILIM) to steady-state overcurrent protection threshold reference (IREF)	V_{OUT} > V_{FB}, PG not asserted		23.3		%
I_{LIM}	Start-up current limit regulation threshold	R_{ILIM} = 138 Ω, V_{IREF} = 1.2 V, V_{OUT} > V_{FB}	31.37	41.50	52.81	A
		R_{ILIM} = 160 Ω, V_{IREF} = 1..2 V, V_{OUT} > V_{FB}	26.18	34.50	42.05	A
		R_{ILIM} = 400 Ω, V_{IREF} = 1.2 V, V_{OUT} > V_{FB}	12.48	14.50	16.71	A
		R_{ILIM} =800 Ω, V_{IREF} = 1.2 V, V_{OUT} > V_{FB}	6.84	9.80	11.84	A
V_{FB}	Foldback voltage			1.99		V

Copyright © 2025 Texas Instruments Incorporated

6.5 Electrical Characteristics (continued)

(Test conditions unless otherwise noted) –40°C ≤ T_J ≤ 125°C, V_{IN} = 12 V, VDD = 12 V, OUT = Open, $V_{EN/UVLO}$ = 2 V, SWEN = 10 kΩ pull-up to 5 V, R_{ILIM} = 550 Ω, R_{IMON} = 1100 Ω, V_{IREF} = 1 V, DVDT = Open, ITIMER = Open, $\overline{FLT}$ = 10 kΩ pull-up to 5 V, PG = 10 kΩ pull-up to 5 V, TEMP = Open, MODE = Open. All voltages referenced to GND.

PARAMETER		TEST CONDITIONS	MIN	TYP	MAX	UNIT
OUTPUT CURRENT MONITOR AND OVERCURRENT PROTECTION (IMON)						
G_{IMON}	IMON current monitor gain (IMON:IOUT)	Device in steady state (PG asserted)	17.85	18.13	18.41	µA/A
I_{OCP}	Steady-state overcurrent protection (Circuit-Breaker) threshold	R_{IMON} = 1100 Ω, V_{IREF} = 1.1 V	53.79	55.11	56.37	A
		R_{IMON} = 1100 Ω, V_{IREF} = 1 V	48.90	50.10	51.25	A
		R_{IMON} = 1100 Ω, V_{IREF} = 0.5 V	24.43	25.08	25.71	A
		R_{IMON} = 1100 Ω, V_{IREF} = 0.24 V	11.64	12.03	12.40	A
TRANSIENT OVERCURRENT BLANKING TIMER (ITIMER)						
I_{ITIMER}	ITIMER pin internal discharge current	I_{OUT} > I_{OCP}, ITIMER ↓	1.88	2.05	2.21	µA
R_{ITIMER}	ITIMER pin internal pull-up resistance		13.29	13.78	14.45	kΩ
V_{INT}	ITIMER pin internal pull-up voltage	I_{OUT} < I_{OCP}	3.62	3.66	3.70	V
$V_{ITIMERTHR}$	ITIMER comparator falling threshold	I_{OUT} > I_{OCP}, ITIMER ↓	2.05	2.17	2.29	V
ΔV_{ITIMER}	ITIMER discharge voltage threshold	I_{OUT} > I_{OCP}, ITIMER ↓	1.38	1.50	1.59	V
SHORT-CIRCUIT PROTECTION						
I_{FFT}	Fixed fast-trip threshold in steady-state	PG asserted High, Standalone/Primary mode, MODE = Open		148		A
		PG asserted High, Secondary mode, MODE = GND		222		A
$SFT_{REF(LIN)\%}$	Scalable fast-trip threshold (IMON) to overcurrent protection threshold reference (IREF) ratio during steady-state	Standalone/Primary mode, MODE = Open		200		%
		Secondary mode, MODE = GND		225		%
$SFT_{REF(SAT)\%}$	Scalable fast-trip threshold (ILIM) to overcurrent protection threshold reference (IREF) ratio during start-up	Standalone/Primary mode, MODE = Open		50		%
		Secondary mode, MODE = GND		50		%
$R_{ON(ACS)}$	Maximum R_{DSON} during active current sharing	V_{ILIM} > $CL_{REF(ACS)\%}$ × V_{IREF}		0.96	1.8	mΩ
$G_{IMON(ACS)}$	IMON:IOUT ratio during active current sharing	PG asserted High, V_{ILIM} > $CL_{REF(ACS)\%}$ × V_{IREF}	18.09	18.45	18.55	µA/A
$CL_{REF(ACS)\%}$	Ratio of active current sharing trigger threshold to steady state overcurrent protection threshold	PG asserted High		36.7		%
INRUSH CURRENT PROTECTION (DVDT)						
I_{DVDT}	DVDT pin charging current	Primary/Standalone mode, MODE = Open	1.45	2.01	2.80	µA
G_{DVDT}	DVDT gain		18.00	20.57	22.00	V/V
R_{DVDT}	DVDT pin to GND discharge resistance			526		Ω
$R_{ON(GHI)}$	R_{ON} when PG is asserted			0.92	1.8	mΩ
QUICK OUTPUT DISCHARGE (QOD)						
I_{QOD}	Quick output discharge internal pull-down current	$V_{SD(F)}$ < V_{EN} < $V_{UVLO(F)}$, –40 < T_J < 125°C	14.85	21.43	24.18	mA
TEMPERATURE SENSOR OUTPUT (TEMP)						
G_{TMP}	TEMP sensor gain		2.58	2.65	2.72	mV/°C
V_{TMP}	TEMP pin output voltage	T_J = 25°C	676	679	684	mV
I_{TMPSRC}	TEMP pin sourcing current		76	91.9	170	µA
I_{TMPSNK}	TEMP pin sinking current		7.6	10	14.5	µA
OVERTEMPERATURE PROTECTION (OTP)						

Copyright © 2025 Texas Instruments Incorporated

6.5 Electrical Characteristics (continued)

(Test conditions unless otherwise noted) –40°C ≤ T_J ≤ 125°C, V_{IN} = 12 V, VDD = 12 V, OUT = Open, $V_{EN/UVLO}$ = 2 V, SWEN = 10 kΩ pull-up to 5 V, R_{ILIM} = 550 Ω, R_{IMON} = 1100 Ω, V_{IREF} = 1 V, DVDT = Open, ITIMER = Open, $\overline{FLT}$ = 10 kΩ pull-up to 5 V, PG = 10 kΩ pull-up to 5 V, TEMP = Open, MODE = Open. All voltages referenced to GND.

PARAMETER		TEST CONDITIONS	MIN	TYP	MAX	UNIT
TSD	Thermal shutdown threshold	T_J Rising		150		°C
TSD_{HYS}	Thermal shutdown hysteresis	T_J Falling		12.5		°C
FET HEALTH MONITOR						
V_{DSFLT}	FET D-S fault threshold	SWEN = L		0.49		V
SINGLE POINT FAILURE (ILIM, IMON, IREF, ITIMER)						
$I_{OC_BKP(LIN)}$	Back-up overcurrent protection threshold (steady -steady)			93		A
$I_{OC_BKP(SAT)}$	Back-up overcurrent protection threshold (start-up)			95		A

6.6 Logic Interface

over operating free-air temperature range (unless otherwise noted)

PARAMETER		TEST CONDITIONS	MIN	TYP	MAX	UNIT
SWEN						
R_{SWEN}	SWEN pin pull-down resistance	SWEN de-asserted Low		9	13.8	Ω
$I_{SWENLKG}$	SWEN pin leakage current	SWEN asserted High	–2		2	µA
V_{IH_SWEN}	SWEN input logic high			1.1	1.2	V
V_{IL_SWEN}	SWEN input logic low		0.4	0.71		V
FAULT INDICATION (FLTB)						
R_{FLTB}	$\overline{FLT}$ pin pull-down resistance	$\overline{FLT}$ asserted Low		9	13.8	Ω
$I_{FLTBLKG}$	$\overline{FLT}$ pin leakage current	$\overline{FLT}$ de-asserted High	–2		2	µA
POWER GOOD INDICATION (PG)						
R_{PG}	PG pin pull-down resistance	PG de-asserted Low		9	13.8	Ω
I_{PGKG}	PG pin leakage current	PG asserted High	–2		2	µA

6.7 Timing Requirements

PARAMETER		TEST CONDITIONS	MIN	TYP	MAX	UNIT
t_{OVP}	Overvoltage protection response time	V_{IN} > $V_{OVP(R)}$ to SWEN↓		1.57		µs
t_{INSDLY}	Insertion delay	V_{DD} > $V_{UVP(R)}$ to SWEN↑		13.7		ms
t_{FFT}	Fixed Fast-Trip response time	I_{OUT} > 1.5 × I_{FFT} to I_{OUT}↓		192		ns
t_{SFT}	Scalable Fast-Trip response time	I_{OUT} > 3 × I_{OCP} to I_{OUT}↓		364		ns
t_{ITIMER}	Overcurrent blanking interval	I_{OUT} = 1.5 × I_{OCP}, C_{ITIMER} = Open		0		ms
		I_{OUT} = 1.5 × I_{OCP}, C_{ITIMER} = 4.7 nF		3.79		ms
t_{RST}	Auto-Retry Interval	Auto-retry variant, Primary mode (MODE = Open)		107.5		ms
$t_{EN(DG)}$	EN/UVLO de-glitch time			6		µs
t_{SU_TMR}	Start-up timeout interval	SWEN↑ to FLT↓		215		ms
t_{QOD}	QOD enable timer	$V_{SD(F)}$ < $V_{EN/UVLO}$ < $V_{UVLO(F)}$		4.66		ms
$t_{Discharge}$	QOD discharge time (90% to 10% of V_{OUT})	$V_{SD(F)}$ < $V_{EN/UVLO}$ < $V_{UVLO(F)}$, V_{IN} = 12 V, C_{OUT} = 1 mF		588		ms
t_{PGA}	PG assertion delay			20		us

Copyright © 2025 Texas Instruments Incorporated

6.8 Switching Characteristics

The output rising slew rate is internally controlled and constant across the entire operating voltage range to ensure the turn on timing is not affected by the load conditions. The rising slew rate can be adjusted by adding capacitance from the dVdt pin to ground. As C_{dVdt} is increased it will slow the rising slew rate (SR). See Slew Rate and Inrush Current Control (dVdt) section for more details. The Turn-Off Delay and Fall Time, however, are dependent on the RC time constant of the load capacitance (C_{OUT}) and Load Resistance (R_L). The Switching Characteristics are only valid for the power-up sequence where the supply is available in steady state condition and the load voltage is completely discharged before the device is enabled. Typical values are taken at T_J = 25°C unless specifically noted otherwise. V_{IN} = 12 V, R_{OUT} = 500 Ω, C_{OUT} = 1 mF

PARAMETER		C_{dVdt} = 3.3 nF	C_{dVdt} = 33 nF	UNITS
SR_{ON}	Output rising slew rate	9.79	1.20	V/ms
$t_{D,ON}$	Turn on delay	0.34	1.54	ms
t_R	Rise time	1.00	8.13	ms
t_{ON}	Turn on time	1.38	10.35	ms
$t_{D,OFF}$	Turn off delay	1081	1060	µs
t_F	Fall time	Depends on R_{OUT} and C_{OUT}		µs

Copyright © 2025 Texas Instruments Incorporated

6.9 Typical Characteristics

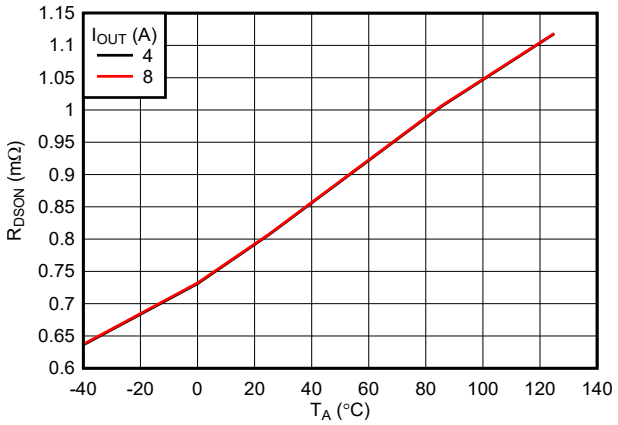

Figure 6-1. ON Resistance Across Temperature

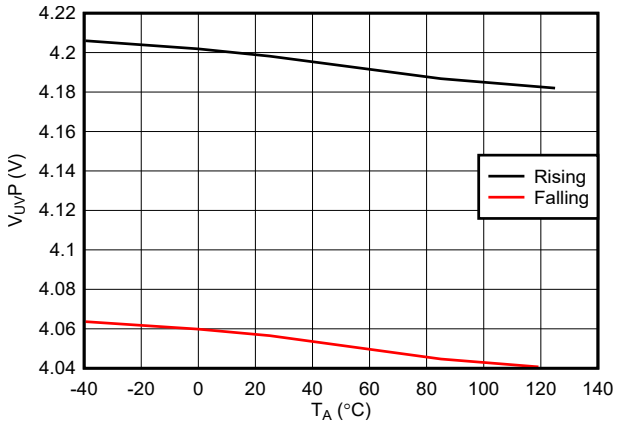

Figure 6-2. VDD Undervoltage Thresholds Across Temperature

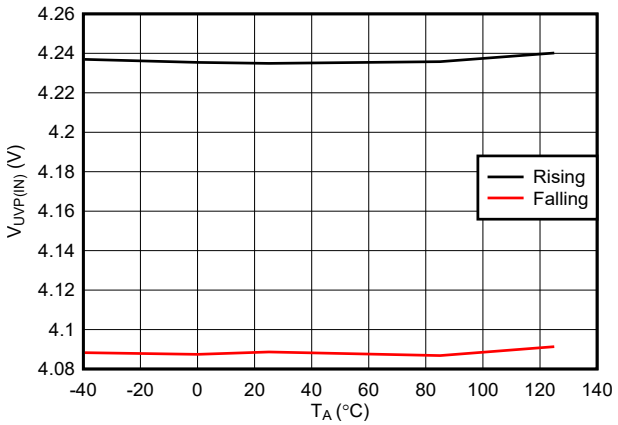

Figure 6-3. VIN Undervoltage Thresholds Across Temperature

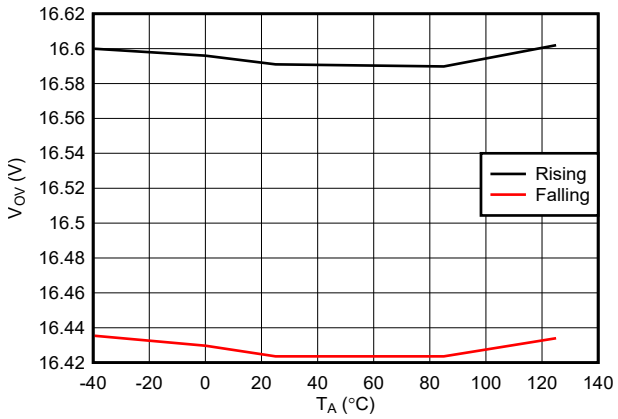

Figure 6-4. VIN Overvoltage Protection Thresholds Across Temperature

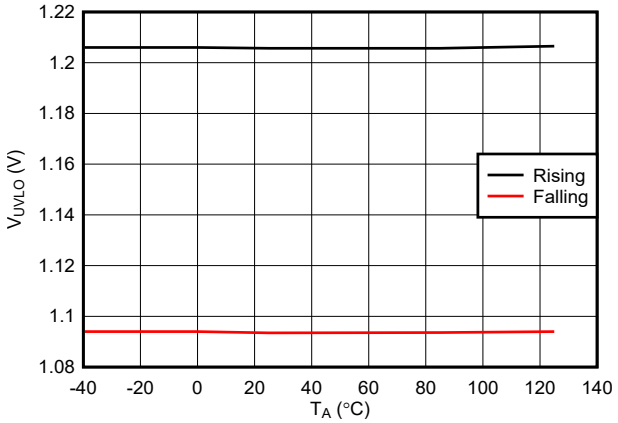

Figure 6-5. EN/UVLO Thresholds For FET Turn-off Across Temperature

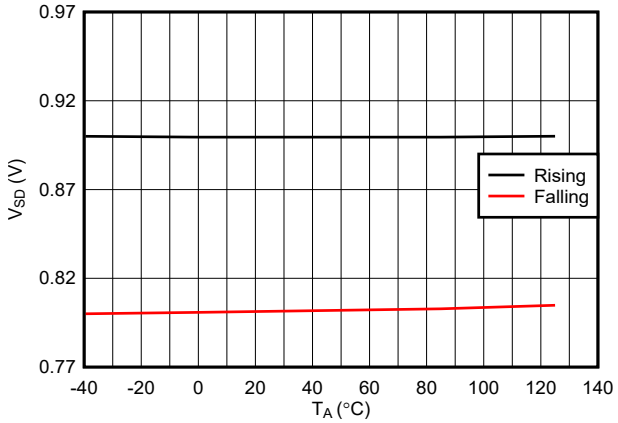

Figure 6-6. EN/UVLO Based Thresholds for Device Shutdown Across Temperature

Copyright © 2025 Texas Instruments Incorporated

6.9 Typical Characteristics (continued)

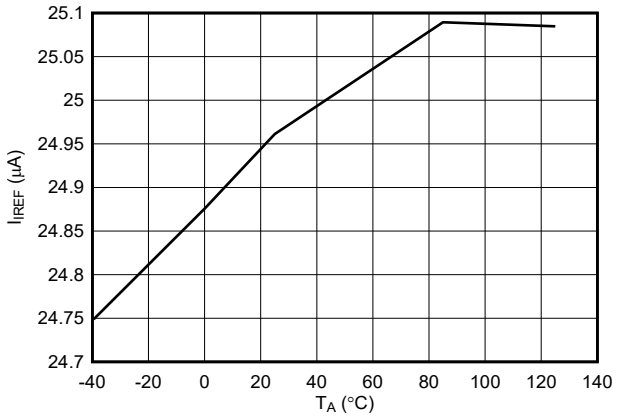

Figure 6-7. IREF Charging Current Across Temperature

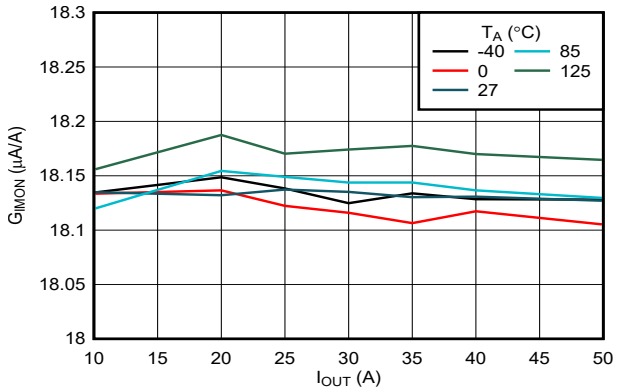

Figure 6-8. IMON Gain Across Load and Temperature

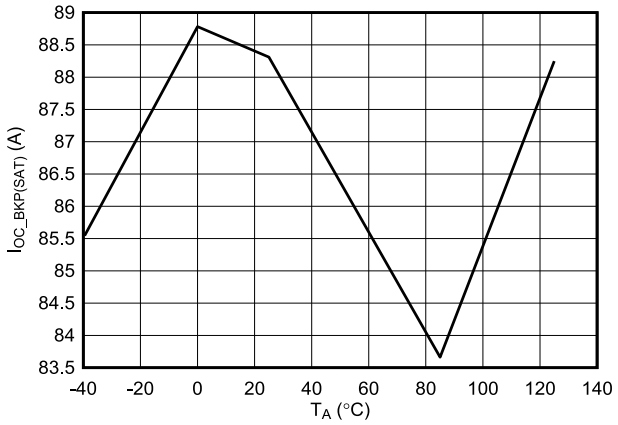

Figure 6-9. ackup Overcurrent Protection Threshold (Start-up) Accuracy

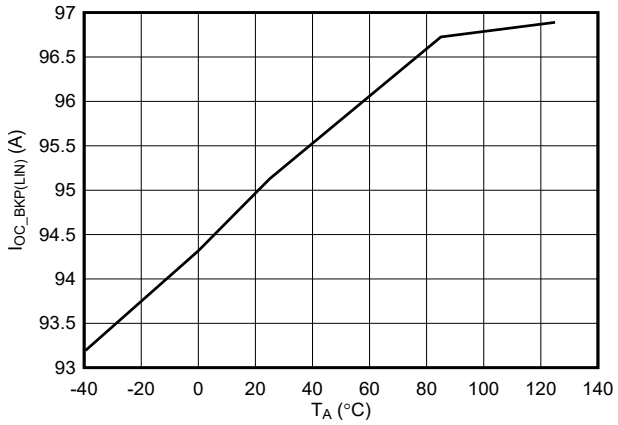

Figure 6-10. Backup Overcurrent Protection Threshold (Steady-State) Accuracy

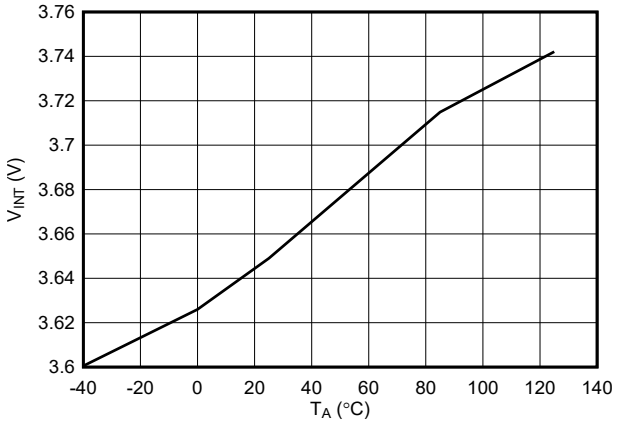

Figure 6-11. ITIMER Pin Internal Pullup Voltage Across Temperature

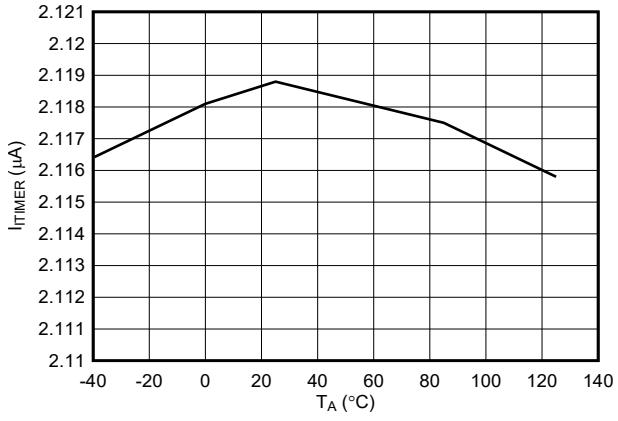

Figure 6-12. ITIMER Pin Discharge Current Across Temperature

6.9 Typical Characteristics (continued)

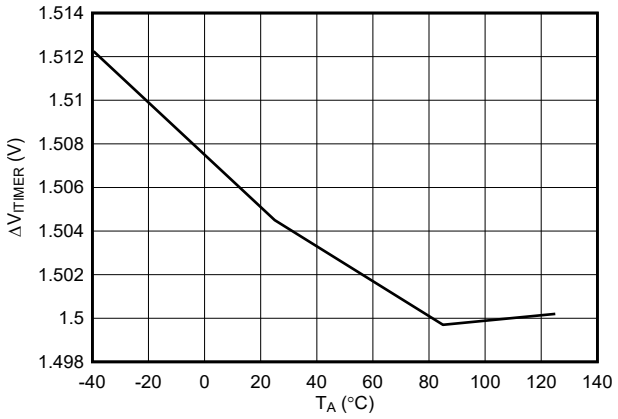

Figure 6-13. ITIMER Pin Discharge Differential Voltage Threshold Across Temperature

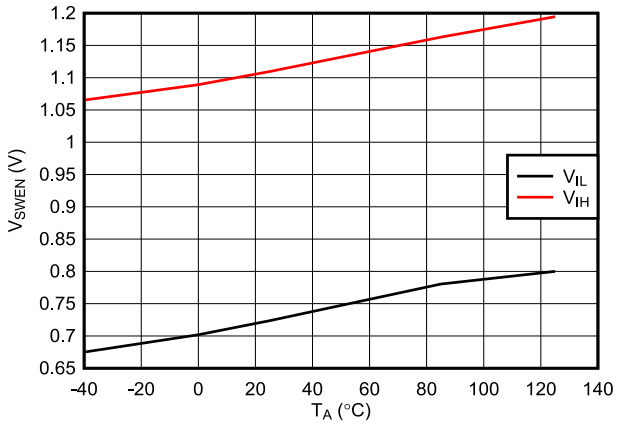

Figure 6-14. SWEN Pin Logic Thresholds Across Temperature

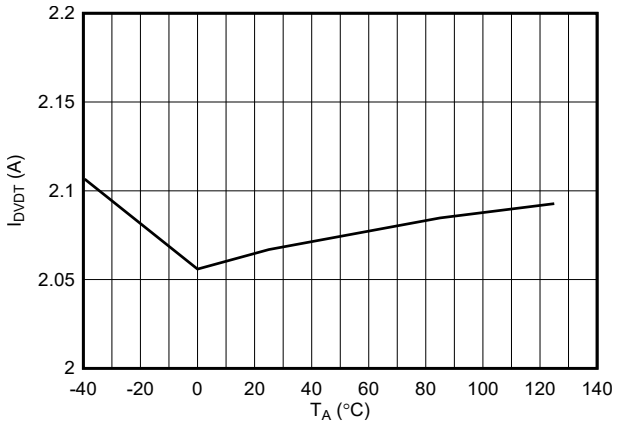

Figure 6-15. DVDT Charging Current Across Temperature

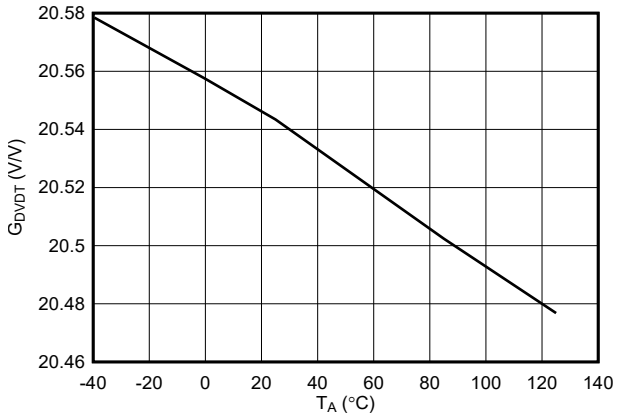

Figure 6-16. DVDT Gain Across Temperature

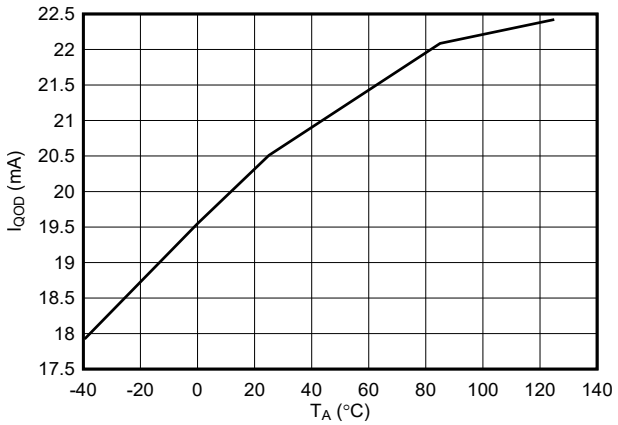

Figure 6-17. QOD Sink Current Across Temperature

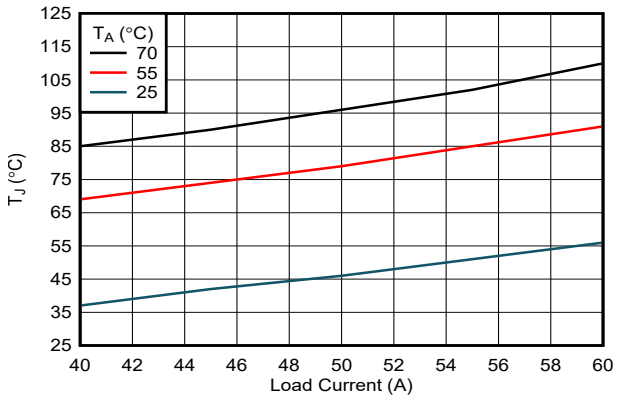

Figure 6-18. Junction Temperature vs Load Current (No Air-Flow)

Copyright © 2025 Texas Instruments Incorporated

6.9 Typical Characteristics (continued)

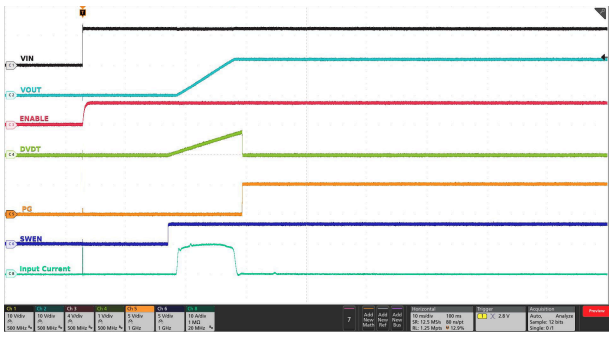

Input hot-plugged into 12 V supply

Figure 6-19. Input Hot-plug With Insertion Delay

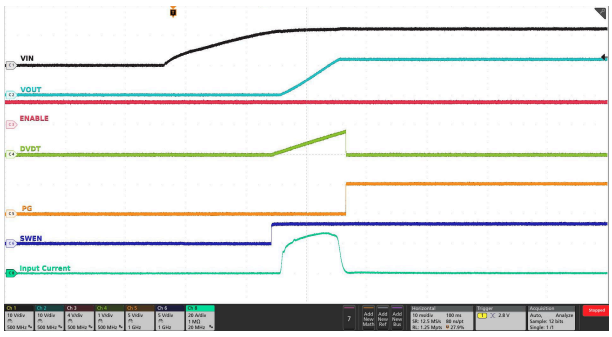

EN/UVLO pin held high, Input supply ramped up to 12 V

Figure 6-20. Power Up Control Using Input Supply

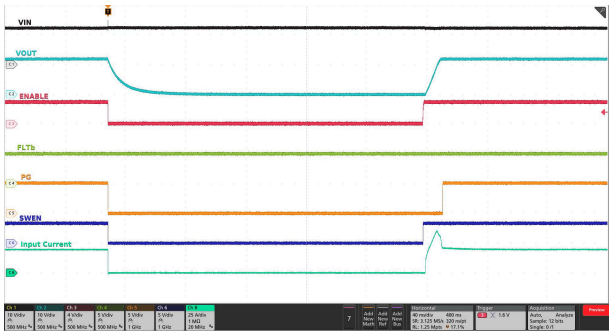

Input supply held steady, EN/UVLO pin toggled low and high

Figure 6-21. Power Up and Down Sequencing Using EN/UVLO Pin

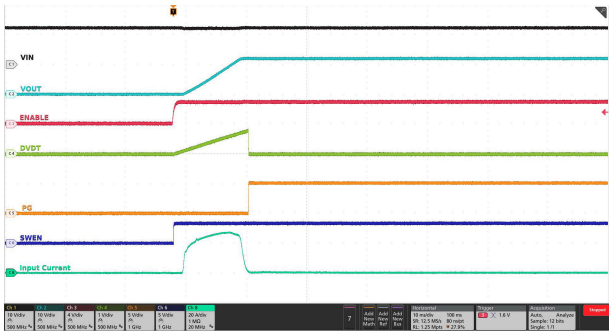

Input supply held steady, EN/UVLO pin toggled from low (below $V_{SD(F)}$) to high (above $V_{UVLO(R)}$)

Figure 6-22. Power Up Control Using EN/UVLO Pin



Input supply held steady, EN/UVLO pin toggled from high (above $V_{UVLO(R)}$) to low (below $V_{SD(F)}$)

Figure 6-23. Power Down Control Using EN/UVLO Pin

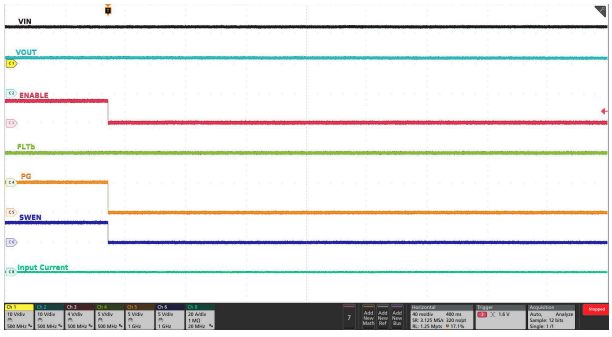

Input supply held steady, EN/UVLO pin toggled from high (above $V_{UVLO(R)}$) to low (below $V_{SD(F)}$)

Figure 6-24. Power Down Control Using EN/UVLO Pin without engaging Quick Output Discharge (QOD)

Copyright © 2025 Texas Instruments Incorporated

6.9 Typical Characteristics (continued)

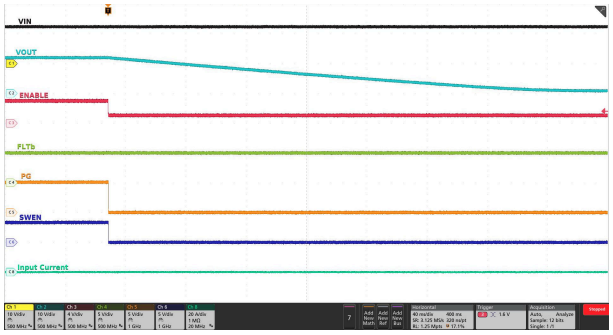

Input supply held steady, EN/UVLO pin toggled from high (above $V_{UVLO(R)}$) to intermediate voltage (below $V_{UVLO(F)}$ and above $V_{SD(F)}$) and held there

Figure 6-25. Power Down Control Using EN/UVLO Pin with Quick Output Discharge (QOD)

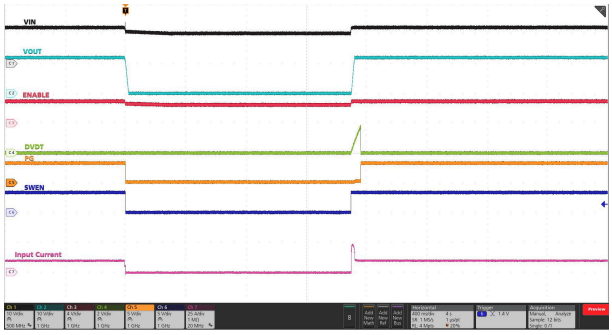

Input supply held steady, EN/UVLO pin held high, SWEN pin toggled low and high

Figure 6-26. Power Up and Down Sequencing Using SWEN Pin

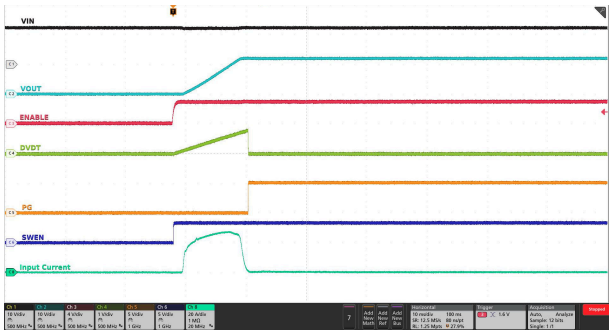

C_{OUT} = 18 mF, C_{dVdt} = 33 nF

Figure 6-27. Inrush Current Control with Capacitive Load

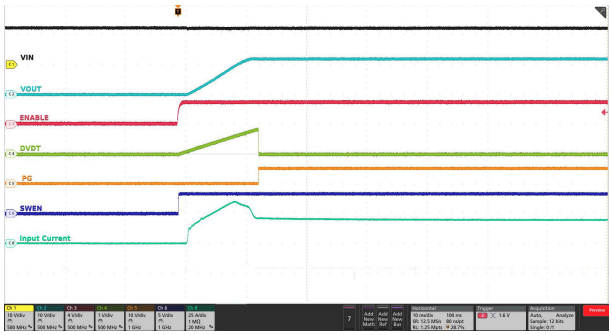

C_{OUT} = 15.5 mF, R_{OUT} = 0.6 Ω, C_{dVdt} = 33 nF

Figure 6-28. Inrush Current Control with Capacitive and Resistive Load

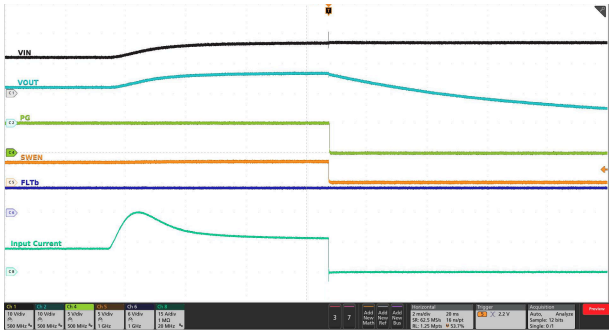

Input supply ramped up above 16.6 V.

Figure 6-29. Input Overvoltage Protection Response

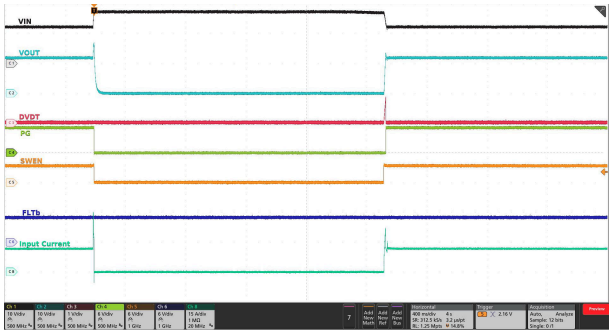

Input supply ramped up above 16.6 V and then ramped down to 12 V.

Figure 6-30. Input Overvoltage Protection Response Followed By Recovery

Copyright © 2025 Texas Instruments Incorporated

6.9 Typical Characteristics (continued)

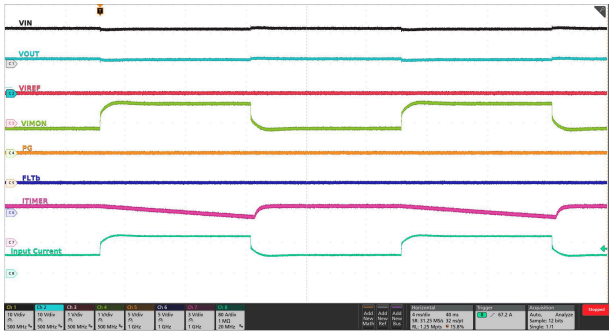

I_{OCP} = 55 A, t_{ITIMER} = 16 ms, I_{OUT} pulsed above the I_{OCP} threshold for duration shorted than t_{ITIMER} without triggering circuit-breaker response.

Figure 6-31. Peak Current Support Using Transient Overcurrent Blanking

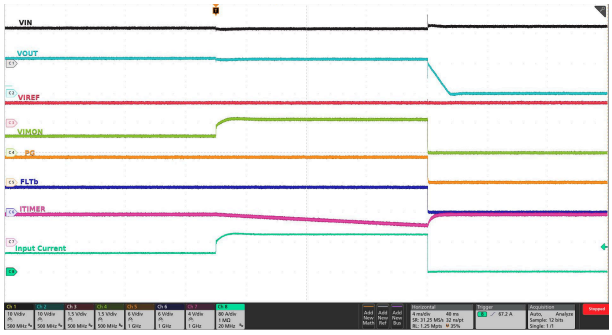

I_{OCP} = 55 A, t_{ITIMER} = 16 ms, I_{OUT} stays above the I_{OCP} threshold persistently to trigger circuit-breaker response.

Figure 6-32. Overcurrent Protection Response (Circuit-Breaker)

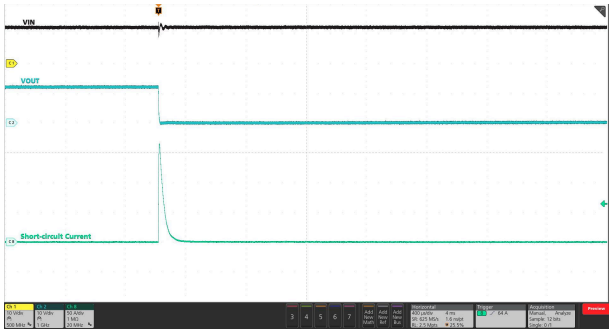

I_{OCP} = 55 A, Output hard-short to GND while in steady. I_{OUT} rises above 2 × I_{OCP} triggers fast-trip response

Figure 6-33. Short-Circuit Protection Response

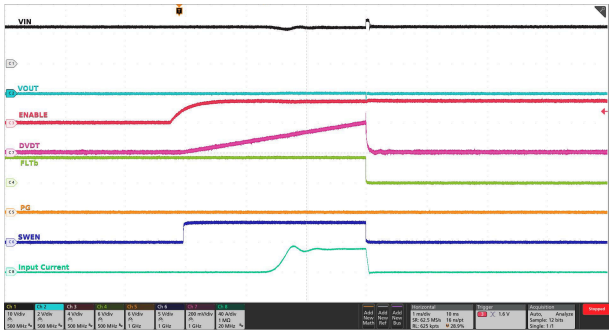

Device turned on using EN/UVLO pin with output hard-short to GND. Device limits the current with foldback and then hits thermal shutdown.

Figure 6-34. Power Up into Short-Circuit

7 Detailed Description

7.1 Overview

The TPS25984x is an eFuse with integrated power switch that is used to manage load voltage and load current. The device starts its operation by monitoring the VDD and IN bus. When V_{DD} and V_{IN} exceed the respective Undervoltage Protection (UVP) thresholds, the device waits for the insertion delay timer duration to allow the supply to stabilize before starting up. Next the device samples the EN/UVLO pin and SWEN pins. A high level on both these pins enables the internal MOSFET to start conducting and allow current to flow from IN to OUT. When either EN/UVLO or SWEN is held low, the internal MOSFET is turned off.

After a successful start-up sequence, the TPS25984x device now actively monitors its load current and input voltage, and controls the internal FET to ensure that the programmed overcurrent threshold is not exceeded and input overvoltage spikes are cut off. This action keeps the system safe from harmful levels of voltage and current. At the same time, a user-adjustable overcurrent blanking timer allows the system to pass transient peaks in the load current profile without tripping the eFuse. Similarly, voltage transients on the supply line are intelligently masked to prevent nuisance trips. This feature ensures a robust protection solution against real faults which is also immune to transients, thereby ensuring maximum system uptime.

The device has integrated high accuracy and high bandwidth analog load current monitor, which allows the system to precisely monitor the load current in steady state as well as during transients. This feature facilitates the implementation of advanced dynamic platform power management techniques such as Intel® PSYS to maximize system power usage and throughput without sacrificing safety and reliability.

For systems needing higher load current support, multiple TPS25984x eFuses can be connected in parallel. All devices share current during start-up as well as steady-state to avoid over-stressing some of the devices more than others which can result in premature or partial shutdown of the parallel chain. The devices synchronize their operating states to ensure graceful start-up, shutdown, and response to faults. This synchronization makes the whole chain function as a single very high current eFuse rather than a bunch of independent eFuses operating asynchronously.

The device has integrated protection circuits to ensure device safety and reliability under recommended operating conditions. The internal FET SOA is protected at all times using the thermal shutdown mechanism, which turns off the FET whenever the junction temperature (T_J) becomes too high for the FET to operate safely.

Copyright © 2025 Texas Instruments Incorporated

7.2 Functional Block Diagram

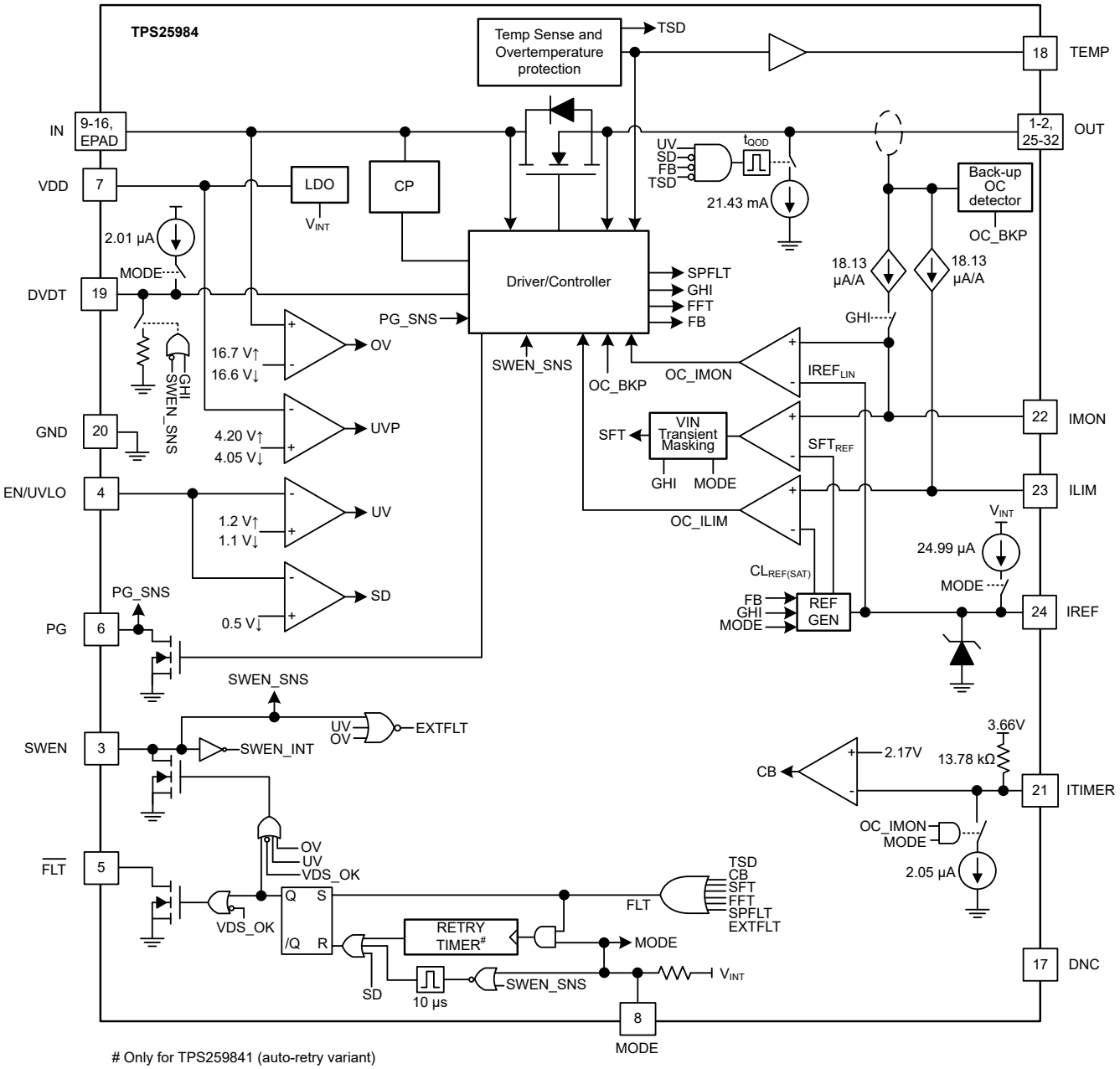

Only for TPS259841 (auto-retry variant)

7.3 Feature Description

The TPS25984x eFuse is a compact, feature rich power management device that provides detection, protection and indication in the event of system faults.

7.3.1 Undervoltage Protection

The TPS25984x implements undervoltage lockout on VDD and VIN in case the applied voltage becomes too low for the system or device to properly operate. The undervoltage lockout has a default internal threshold of V_{UVP} on VDD and V_{UVPIN} on VIN. Alternatively, the UVLO comparator on the EN/UVLO pin allows the undervoltage protection threshold to be externally adjusted to a user defined value. Figure 7-1 and Equation 1 show how a resistor divider can be used to set the UVLO set point for a given voltage supply.

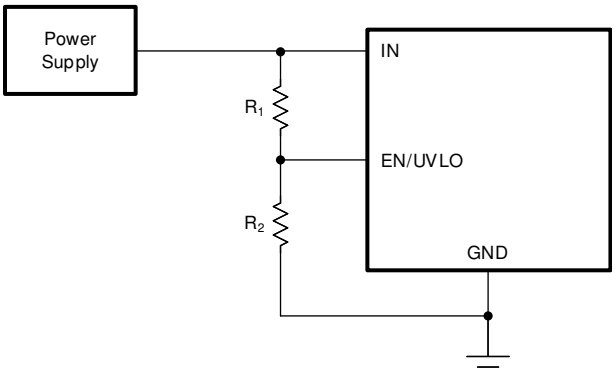

Figure 7-1. Adjustable Undervoltage Protection

$$V_{IN(UV)} = V_{UVLO(R)}\frac{R_1 + R_2}{R_2} \quad (1)$$

The EN/UVLO pin implements a bi-level threshold.

1. $V_{EN} > V_{UVLO(R)}$: Device is fully ON.
2. $V_{SD(F)} < V_{EN} < V_{UVLO(F)}$: The FET along with most of the controller circuitry is turned OFF, except for some critical bias and digital circuitry. Holding the EN/UVLO pin in this state for > t_{QOD} activates the Output Discharge function.
3. $V_{EN} < V_{SD(F)}$: All active circuitry inside the part is turned OFF and it retains no digital state memory. It also resets any latched faults. In this condition, the device quiescent current consumption is minimal.

7.3.2 Insertion Delay

The TPS25984x implements insertion delay at start-up to ensure the supply has stabilized before the device tries to turn on the power to the load. The device initially waits for the VDD supply to rise above the UVP threshold and all the internal bias voltages to settle. After that, the device remains off for an additional delay of t_{INSDLY} irrespective of the EN/UVLO pin condition. This action helps to prevent any unexpected behavior in the system if the device tries to turn on before the card has made firm contact with the backplane or if there is any supply ringing or noise during start-up.

Copyright © 2025 Texas Instruments Incorporated

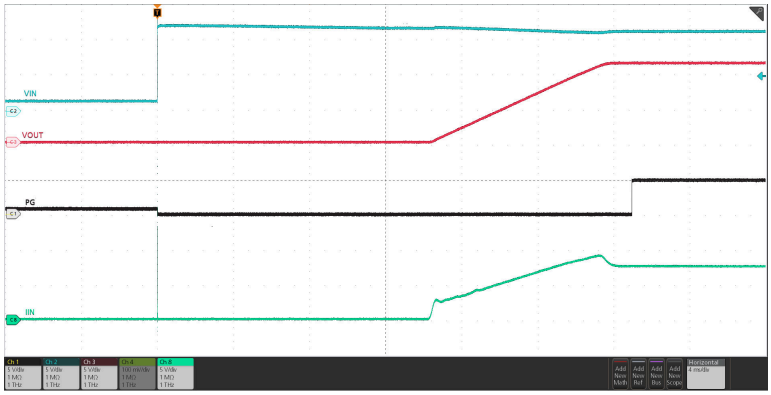

Input supply stepped up from 0 V to 12 V. Device waits for t_{INSDLY} for input supply to stabilize before it turns on the output.

Figure 7-2. Insertion Delay

7.3.3 Overvoltage Protection

The TPS25984x implements overvoltage lockout to protect the load from input overvoltage conditions. The OVP comparator on the IN pin uses a fixed internal overvoltage protection threshold. If the input voltage on IN exceeds the OVP rising threshold ($V_{OVP(R)}$), the power FET is turned OFF within t_{OVP}. After the voltage on IN falls below the OVP falling threshold ($V_{OVP(F)}$), the FET is turned ON in a dVdt controlled manner.

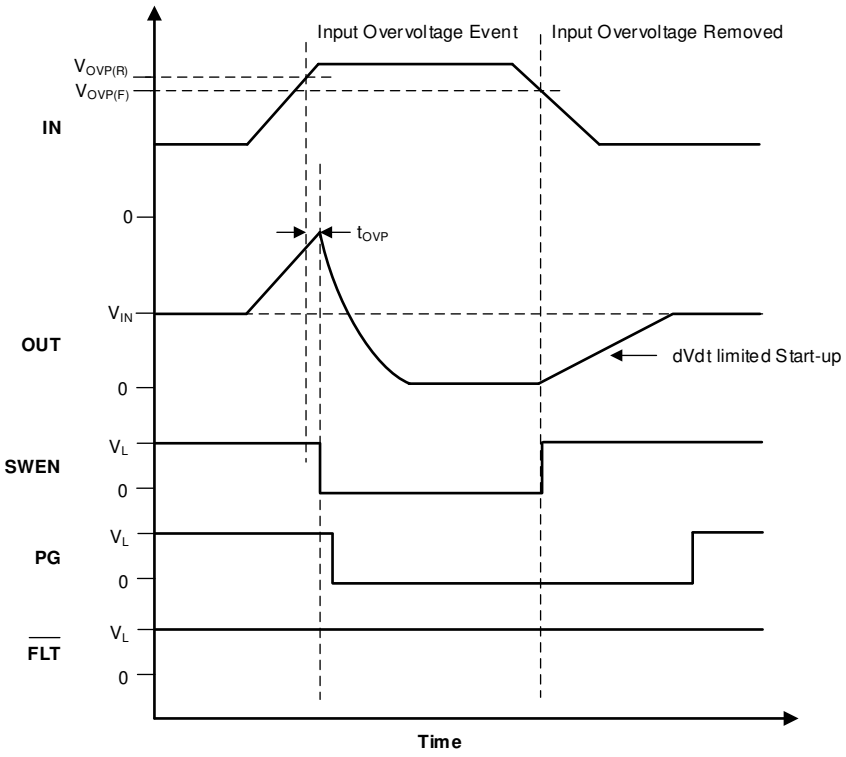

Figure 7-3. Input Overvoltage Protection Response

7.3.4 Inrush Current, Overcurrent, and Short-Circuit Protection

TPS25984x incorporates four levels of protection against overcurrent:

1. Adjustable slew rate (dVdt) for inrush current control
2. Active current limit with an adjustable threshold (I_{LIM}) for overcurrent protection during start-up
3. Circuit-breaker with an adjustable threshold (I_{OCP}) and blanking timer (t_{ITIMER}) for overcurrent protection during steady-state
4. Fast-trip response to severe overcurrent faults with an adjustable threshold (I_{SFT} = 2 × I_{OCP}) to quickly protect against severe short-circuits under all conditions, as well as a fixed threshold (I_{FFT}) during steady state

7.3.4.1 Slew Rate (dVdt) and Inrush Current Control

During hot plug events or while trying to charge a large output capacitance, there can be a large inrush current. If the inrush current is not managed properly, the inrush current can damage the input connectors and cause the system power supply to droop. This action can lead to unexpected restarts elsewhere in the system. The inrush current during turn-on is directly proportional to the load capacitance and rising slew rate. Equation 2 can be used to find the slew rate (SR) required to limit the inrush current (I_{INRUSH}) for a given load capacitance (C_{LOAD}):

$$SR(V/ms) = \frac{I_{INRUSH}(A)}{C_{LOAD}(mF)} \quad (2)$$

A capacitor can be added to the dVdt pin to control the rising slew rate and lower the inrush current during turn-on. The required CdVdt capacitance to produce a given slew rate can be calculated using Equation 3.

$$C_{DVDT}(pF) = \frac{42000}{SR(V/ms)} \quad (3)$$

The fastest output slew rate is achieved by leaving the dVdt pin open.

Note

1. High input slew rates in combination with high input power path inductance can result in oscillations during start-up. This can be mitigated using one or more of the following steps:
   a. Reduce the input inductance.
   b. Increase the capacitance on VIN pin.
   c. Increase the dVdt pin capacitance to reduce the slew rate or increase the start-up time. TI recommends using a minimum start-up time of 5 ms.

7.3.4.1.1 Start-Up Time Out

If the start-up is not completed, that is, the FET is not fully turned on within a certain timeout interval (t_{SU_TMR}) after SWEN is asserted, the device registers it as a fault. $\overline{FLT}$ is asserted low and the device goes into latch-off or auto-retry mode depending on the device configuration.

7.3.4.2 Steady-State Overcurrent Protection (Circuit-Breaker)

The TPS25984x responds to output overcurrent conditions during steady-state by performing a circuit-breaker action after a user-adjustable transient fault blanking interval. This action allows the device to support a higher peak current for a short user-defined interval but also ensures robust protection in case of persistent output faults.

The device constantly senses the output load current and provides an analog current output (I_{IMON}) on the IMON pin which is proportional to the load current, which in turn produces a proportional voltage (V_{IMON}) across the IMON pin resistor (R_{IMON}) as per Equation 4.

$$V_{IMON} = I_{OUT} \times G_{IMON} \times R_{IMON} \quad (4)$$

Copyright © 2025 Texas Instruments Incorporated

Where G_{IMON} is the current monitor gain (I_{IMON} : I_{OUT})

The overcurrent condition is detected by comparing this voltage against the voltage on the IREF pin as a reference. The reference voltage (V_{IREF}) can be controlled in two ways, which sets the overcurrent protection threshold (I_{OCP}) accordingly.

- In the standalone or primary mode of operation, the internal current source interacts with the external IREF pin resistor (R_{IREF}) to generate the reference voltage. It is also possible to drive the IREF pin from an external low impedance reference voltage source as shown in Equation 5.

$$V_{IREF} = I_{IREF} \times R_{IREF} \quad (5)$$

- In a primary and secondary parallel configuration, the primary eFuse or controller drives the voltage on the IREF pin to provide an external reference (V_{IREF}) for all the secondary devices in the chain.

The overcurrent protection threshold during steady-state (I_{OCP}) can be calculated using Equation 6.

$$I_{OCP} = \frac{V_{IREF}}{G_{IMON} \times R_{IMON}} \quad (6)$$

Note

Maintain V_{IREF} within the recommended voltage range to ensure proper operation of the overcurrent detection circuit.

TI recommends to add a 150-pF capacitor from IREF pin to GND for improved noise immunity.

After an overcurrent condition is detected, that is the load current exceeds the programmed current limit threshold (I_{OCP}), but stays lower than the short-circuit threshold (2 × I_{OCP}), the device starts discharging the ITIMER pin capacitor using an internal 2-µA pulldown current. If the load current drops below the current limit threshold before the ITIMER capacitor discharges by ΔV_{ITIMER}, the ITIMER is reset by pulling it up to V_{INT} internally and the circuit-breaker action is not engaged. This action allows short overload transient pulses to pass through the device without tripping the circuit. If the overcurrent condition persists, the ITIMER capacitor continues to discharge and after it falls by ΔV_{ITIMER}, the circuit-breaker action turns off the FET immediately. At the same time, the ITIMER cap is charged up to V_{INT} again so that it is at its default state before the next overcurrent event. This action ensures the full blanking timer interval is provided for every overcurrent event. Equation 7 can be used to calculate the R_{IMON} value for the desired overcurrent threshold.

$$R_{IMON} = \frac{V_{IREF}}{G_{IMON} \times I_{OCP}} \quad (7)$$

The duration for which transients are allowed can be adjusted using an appropriate capacitor value from ITIMER pin to ground. The transient overcurrent blanking interval can be calculated using Equation 8.

$$t_{ITIMER}(ms) = \frac{C_{ITIMER}(nF) \times \Delta V_{ITIMER}(V)}{I_{ITIMER}(\mu A)} \quad (8)$$

Copyright © 2025 Texas Instruments Incorporated

Note

1. Leave the ITIMER pin open to allow the part to break the circuit with the minimum possible delay. However, leaving the pin open makes the circuit-breaker response extremely sensitive to noise and can cause false tripping during load transients.
2. Shorting the ITIMER pin to ground results in minimum overcurrent response delay (similar to ITIMER pin open condition), but increases the quiescent current – not a recommended mode of operation.
3. Increasing the ITIMER cap value extends the overcurrent blanking interval. However, it also extends the time needed for the ITIMER cap to recharge up to V_{INT} before the next overcurrent event. If the next overcurrent event occurs before the ITIMER cap is recharged fully, it takes less time to discharge to the VITIMER threshold, thereby it provides a shorter blanking interval than intended.

Figure 7-4 illustrates the overcurrent response for TPS25984x eFuse. After the part shuts down due to a circuit-breaker fault, it either stays latched off (TPS259840 variant) or restarts automatically after a fixed delay (TPS259841 variant).

Copyright © 2025 Texas Instruments Incorporated

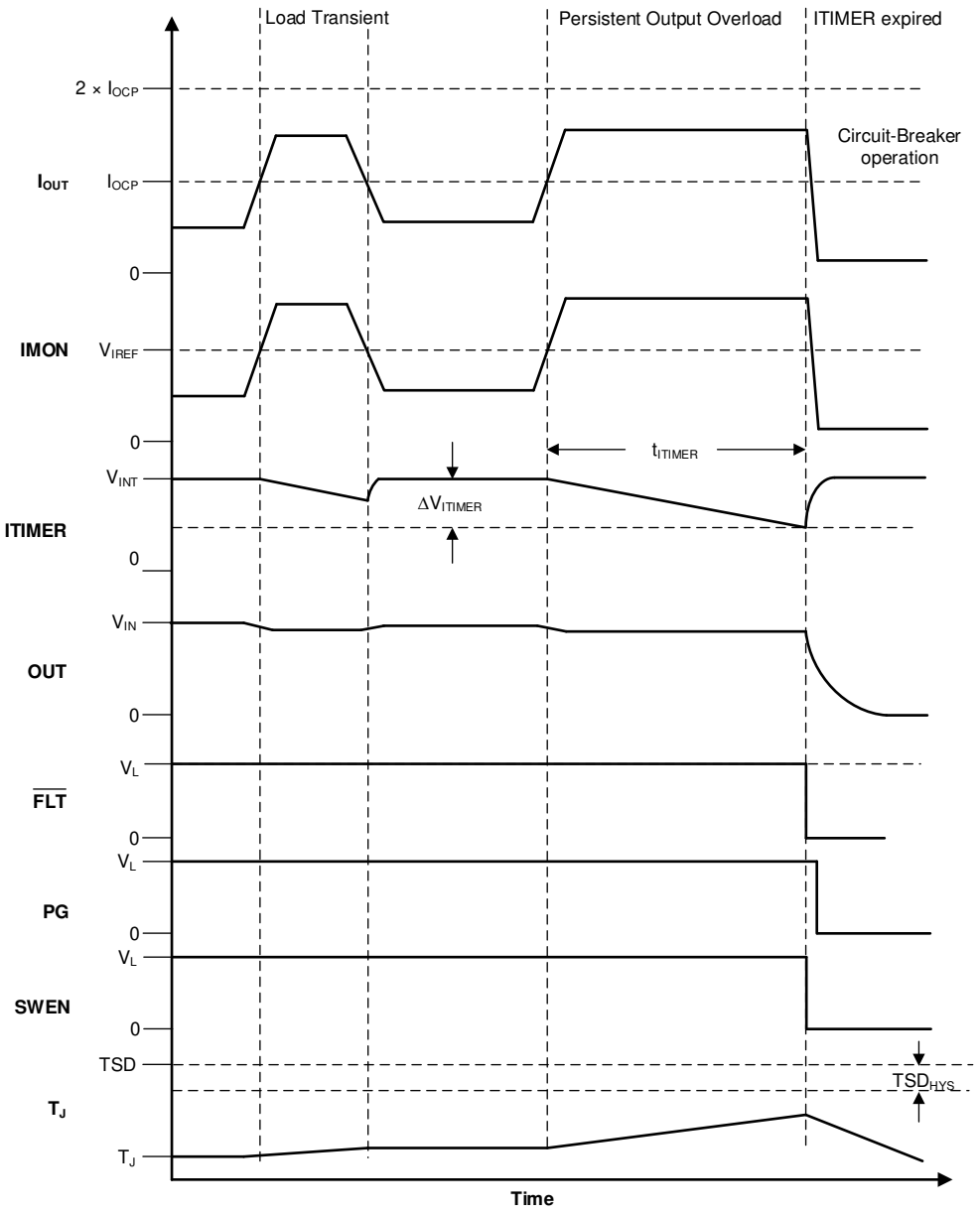

Figure 7-4. Steady-State Overcurrent (Circuit-Breaker) Response

7.3.4.3 Active Current Limiting During Start-Up

The TPS25984x responds to output overcurrent conditions during start-up by actively limiting the current. The device constantly senses the current flowing through each one (I_{DEVICE}) and provides an analog current output (I_{ILIM}) on the ILIM pin, which in turn produces a proportional voltage (V_{ILIM}) across the ILIM pin resistor (R_{ILIM}) as per Equation 9.

$$V_{ILIM} = I_{DEVICE} \times G_{ILIM} \times R_{ILIM} \quad (9)$$

Where G_{ILIM} is the current monitor gain (I_{ILIM} : I_{DEVICE})

The overcurrent condition is detected by comparing this voltage against a threshold which is a scaled voltage ($CLREF_{SAT}$) derived from the reference voltage (V_{IREF}) on the IREF pin as presented in Equation 10.

$$CLREF_{SAT} = \frac{0.7 \times V_{IREF}}{3} \quad (10)$$

Copyright © 2025 Texas Instruments Incorporated

The reference voltage (V_{IREF}) can be controlled in two ways, which sets the start-up current limit threshold (I_{LIM}) accordingly.

1. In the standalone mode of operation, the internal current source interacts with the external IREF pin resistor (R_{IREF}) to generate the reference voltage as shown in Equation 11.

$$V_{IREF} = I_{IREF} \times R_{IREF} \quad (11)$$

2. In a primary and secondary configuration, the primary eFuse or controller drives the voltage on the IREF pin to provide an external reference (V_{IREF}).

The active current limit (I_{LIM}) threshold during start-up can be calculated using Equation 12.

$$I_{ILIM} = \frac{CLREF_{SAT}}{G_{ILIM} \times R_{ILIM}} \quad (12)$$

When the load current through the device during start-up exceeds I_{LIM}, the device tries to regulate and hold the load current at I_{LIM}.

During current regulation, the output voltage drops, resulting in increased device power dissipation across the FET. If the device internal temperature (T_J) exceeds the thermal shutdown threshold (TSD), the FET is turned off. After the part shuts down due to a TSD fault, it either stays latched off (TPS259840 variants) or restarts automatically after a fixed delay (TPS259841 variants). See *Overtemperature protection* section for more details on device response to overtemperature.

Note

The active current limit block employs a foldback mechanism during start-up based on the output voltage (V_{OUT}). When V_{OUT} is below the foldback threshold (V_{FB}), the current limit threshold is further lowered.

7.3.4.4 Short-Circuit Protection

During an output short-circuit event, the current through the device increases very rapidly. When an output short-circuit is detected, the internal fast-trip comparator triggers a fast protection sequence to prevent the current from building up further and causing any damage or excessive input supply droop. The fast-trip comparator employs a scalable threshold (I_{SFT}) which is equal to 2 × I_{OCP} (primary device) or 2.25 × I_{OCP} (secondary device) during steady-state and 1.5 × I_{LIM} during inrush. This action enables the user to adjust the fast-trip threshold as per system rating, rather than using a high fixed threshold which can not be suitable for all systems. After the current exceeds the fast-trip threshold, the TPS25984x turns off the FET within t_{SFT}. The device also employs a higher fixed fast-trip threshold (I_{FFT}) to provide fast protection against hard short-circuits during steady-state (FET in linear region). After the current exceeds I_{FFT}, the FET is turned off completely within t_{FFT}. Figure 7-5 illustrates the short-circuit response for TPS25984x eFuse.

In some of the systems, for example blade servers and telecom equipment which house multiple hot-pluggable blades or line cards connected to a common supply backplane, there can be transients on the supply due to switching of large currents through the inductive backplane. This can result in current spikes on adjacent cards which can potentially be large enough to trigger the fast-trip comparator of the eFuse. The TPS25984x uses a proprietary algorithm to avoid nuisance tripping in such cases thereby facilitating uninterrupted system operation.

Copyright © 2025 Texas Instruments Incorporated

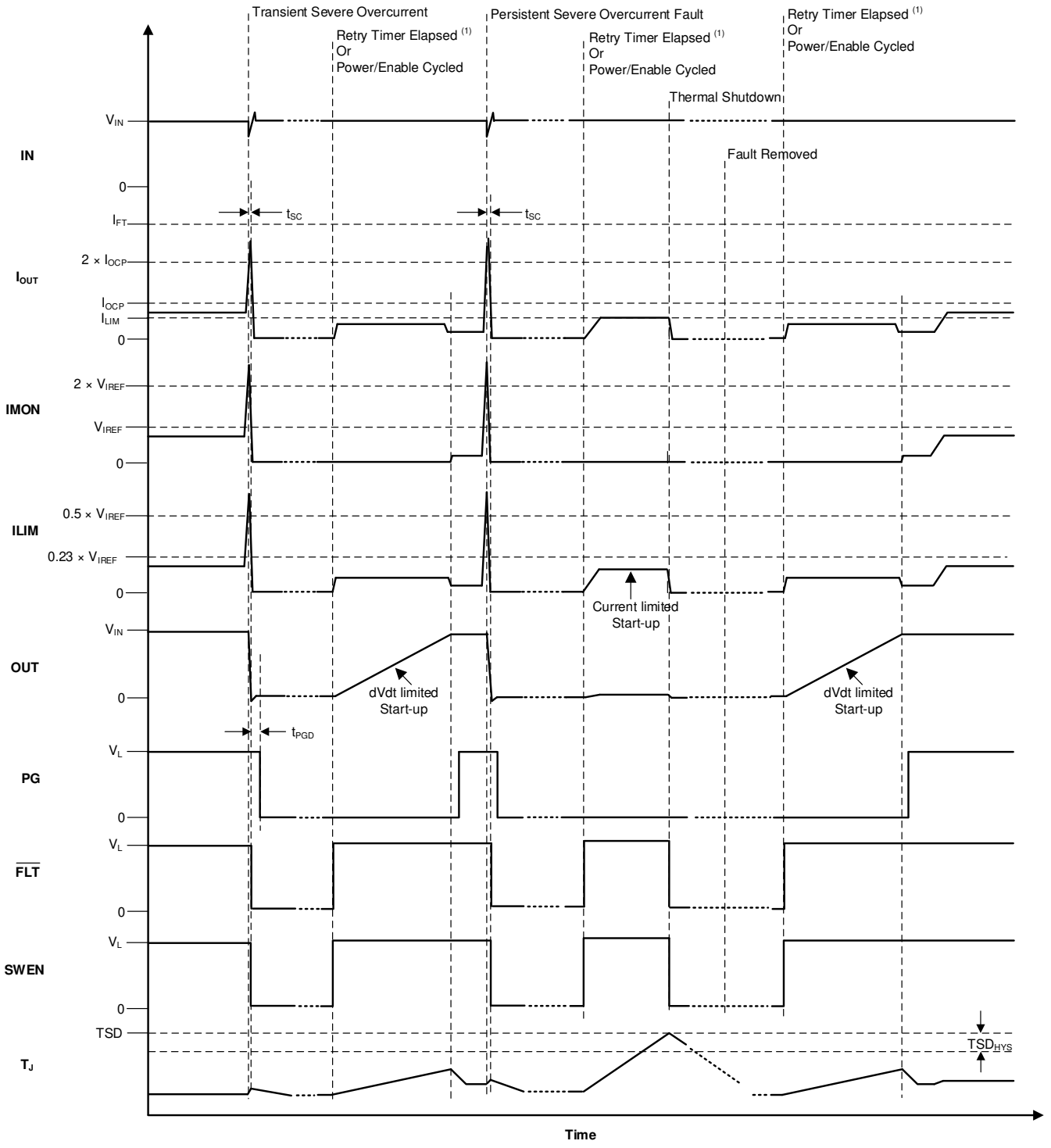

(1) Applicable only to TPS259841 variants

Figure 7-5. Short-Circuit Response

7.3.5 Analog Load Current Monitor (IMON)

The TPS25984x allows the system to monitor the output load current accurately by providing an analog current on the IMON pin which is proportional to the current through the FET. The benefit of having a current output is that the signal can be routed across a board without adding significant errors due to voltage drop or noise coupling from adjacent traces. The current output also allows the IMON pins of multiple TPS25984x devices to

Copyright © 2025 Texas Instruments Incorporated

be tied together to get the total current in a parallel configuration. The IMON signal can be converted to a voltage by dropping it across a resistor at the point of monitoring. The user can sense the voltage (V_{IMON}) across the R_{IMON} to get a measure of the output load current using Equation 13.

$$I_{OUT} = \frac{V_{IMON}}{G_{IMON} \times R_{IMON}} \quad (13)$$

The TPS25984x IMON circuit is designed to provide high bandwidth and high accuracy across load and temperature conditions, irrespective of board layout and other system operating conditions. This design allows the IMON signal to be used for advanced dynamic platform power management techniques such as PROCHOT™ or Intel PSYS™ to maximize system power usage and platform throughput without sacrificing safety or reliability.

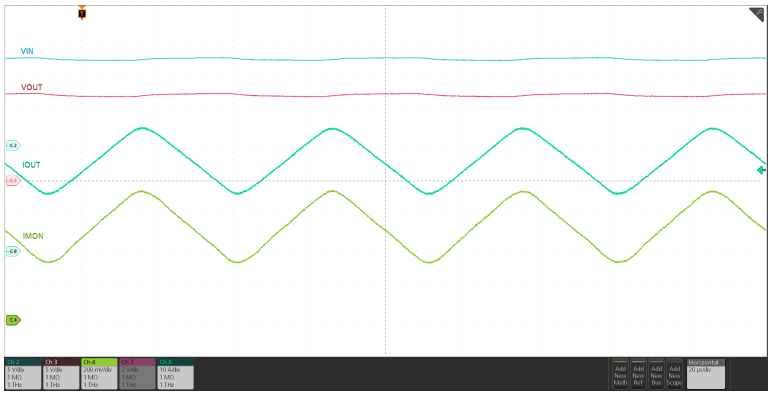

Figure 7-6. Analog Load Current Monitor Response

Note

1. The IMON pin provides load current monitoring information only during steady-state. During inrush, the IMON pin reports zero load current.
2. The ILIM pin reports the individual device load current at all times and can also be used as an analog load current monitor for each individual device.
3. Care must be taken to minimize parasitic capacitance on the IMON and ILIM pins to avoid any impact on the overcurrent and short-circuit protection timing.

7.3.6 Mode Selection (MODE)

This pin can be used to configure the TPS25984x as a primary device in a chain along with other TPS25984x eFuses, designated as secondary devices. This feature allows some of the TPS25984x pin functions to be changed to aid the primary + secondary parallel connection.

This pin is sampled at power up. Leaving the pin open configures it as a primary or standalone device. Connecting this pin to GND configures it as a secondary device.

The following functions are disabled in secondary mode and the device relies on the primary device to provide this functionality:

1. IREF internal current source
2. DVDT internal current source
3. Overcurrent detection in steady-state for circuit-breaker response
4. PG de-assertion (pulldown) after reaching steady-state
5. Latch-off after fault

In secondary mode, the following functions are still active:

Copyright © 2025 Texas Instruments Incorporated

1. Overtemperature protection
2. Start-up current limit based on ILIM
3. Active current sharing during inrush as well as steady-state
4. Analog current monitor (IMON) in steady state
5. Steady-state overcurrent detection based on IMON. This is indicated by pulling ITIMER pin low internally, but does not trigger circuit-breaker action on ITIMER expiry. Rather, it relies on the primary device to start its own ITIMER and then trigger the circuit-breaker action for the whole chain by pulling SWEN low after the ITIMER expiry. However, the secondary devices use an internal overcurrent timer as a backup in case the primary device fails to initiate circuit-breaker action for an extended period of time. Refer to *Single Point Failure Mitigation* section for details.
6. Each device still has individual scalable and fixed fast-trip thresholds to protect itself. The individual short-circuit protection threshold is set to maximum, that is 2.25 × I_{OCP} (steady-state) or 2 × I_{LIM} (start-up) in secondary mode so that the primary device can lower it further for the whole system.
7. Individual OVP is set to maximum in secondary device so that the primary can lower it further for the whole system.
8. $\overline{FLT}$ assertion based on individual device fault detection (except circuit-breaker).
9. PG de-assertion control during inrush and assertion control after device reaches steady state. However, after that in steady state, the secondary device no longer controls the de-assertion of the PG in case of faults.
10. SWEN assertion or de-assertion based on internal events as well as FET ON and OFF control based on SWEN pin status.

In secondary mode, the device behavior during short-circuit and fast-trip is also altered. More details are available in the *Short-Circuit Protection* section.

7.3.7 Parallel Device Synchronization (SWEN)

The SWEN pin is a signal which is driven high when the FET must be turned ON. When the SWEN pin is driven low (internally or externally), it signals the driver circuit to turn OFF the FET. This pin serves both as a control and handshake signal and allows multiple devices in a parallel configuration to synchronize their FET ON and OFF transitions.

Table 7-1. SWEN Summary

Device State	FET Driver Status	SWEN
Steady-state	ON	H
Inrush	ON	H
Overtemperature shutdown	OFF	L
Auto-retry timer running	OFF	L
Undervoltage (EN/UVLO)	OFF	L
Undervoltage (VDD UVP)	OFF	L
Undervoltage (VIN UVP)	OFF	L
Insertion delay	OFF	L
Overvoltage lockout (VIN OVP)	OFF	L
Transient overcurrent	ON	H
Circuit-breaker (persistent overcurrent followed by ITIMER expiry)	OFF	L
Fast-trip	OFF	L
Fault response mono-shot running (MODE = GND)	OFF	L
Fault response mono-shot expired (MODE = GND)	ON	H

Copyright © 2025 Texas Instruments Incorporated

Table 7-1. SWEN Summary (continued)

Device State	FET Driver Status	SWEN
ILM pin open (start-up)	OFF	L
ILM pin short (start-up)	OFF	L
ILM pin open (steady-state)	OFF	L
ILM pin short (steady-state)	OFF	L
FET health fault	OFF	L

The SWEN is an open-drain pin and must be pulled up to an external supply.

Note

1. Power up the SWEN pullup supply so the eFuse can be turned on. TI recommends to use a system standby rail which is derived from the input of the eFuse.
2. In some cases, Using the ITIMER pin as a pullup rail for the SWEN pin can be possible. Use a weak pullup to ensure that the loading on the ITIMER is not high enough to affect the ITIMER charging and discharging time.

In a primary + secondary parallel configuration, the SWEN pin is used by the primary device to control the on and off transitions of the secondary devices. At the same time, it allows the secondary devices to communicate any faults or other condition which can prevent it from turning on to the primary device. Refer to *Fault Response and Indication ($\overline{FLT}$)* for more details.

To maintain state machine synchronization, the devices rely on SWEN level transitions as well as timing for handshakes. This ensures all the devices turn ON and OFF synchronously and in the same manner (for example, DVDT controlled or current limited start-up). There are also fail-safe mechanisms in the SWEN control and handshake logic to ensure the entire chain is turned off safely even if the primary device is unable to take control in case of a fault.

Note

TI recommends to keep the parasitic loading on the SWEN pin to a minimum to avoid synchronization timing issues.

7.3.8 Stacking Multiple eFuses for Unlimited Scalability

For systems needing higher current than supported by a single TPS25984x, multiple TPS25984x devices can be connected in parallel to deliver the total system current. Conventional eFuses can not share current equally between themselves during steady-state due to mismatches in their path resistances (which includes the individual device R_{DSON} variation from part to part, as well as the parasitic PCB trace resistance). This fact can lead to multiple problems in the system:

1. Some devices always carry higher current as compared to other devices, which can result in accelerated failures in those devices and an overall reduction in system operational lifetime.
2. As a result, thermal hotspots form on the board, devices, traces, and vias carrying higher current, leading to reliability concerns for the PCB. In addition, this problem makes thermal modeling and board thermal management more challenging for designers.
3. The devices carrying higher current can hit their individual circuit-breaker threshold prematurely even while the total system load current is lower than the overall circuit-breaker threshold. This action can lead to false tripping of the eFuse during normal operation. This has the effect of lowering the current-carrying capability of the parallel chain. In other words, the current rating of the parallel eFuse chain must be de-rated as compared to the sum of the current ratings of the individual eFuses. This de-rating factor is a function of the path resistance mismatch, the number of devices in parallel, and the individual eFuse circuit-breaker accuracy.

Copyright © 2025 Texas Instruments Incorporated

The need for de-rating has an adverse impact on the system design. The designer is forced to make one of these trade-offs:

1. Limit the operating load current of the system to below the derated current threshold of the eFuse chain. Essentially, it means lower platform capabilities than are supported by the power supply (PSU).
2. Increase the overall circuit-breaker threshold to allow the desired system load current to pass through without tripping. As a consequence, the power supply (PSU) must be oversized to deliver higher currents during faults to account for the de-grading of the overall circuit-breaker accuracy.

In either case, the system suffers from poor power supply utilization, which can mean sub-optimal system throughput or increased installation and operating costs, or both.

The TPS25984x uses a proprietary technique to address these problems and provide unlimited scalability of the solution by paralleling as many eFuses as needed. This is incorporated without unequal current sharing or any degradation in accuracy.

For this scheme to work correctly, the devices must be connected in the following manner:

- The SWEN pins of all the devices are connected together.
- The IMON pins of all the devices must be connected together. The R_{IMON} resistor value on the combined IMON pin can be calculated using Equation 14.

$$R_{IMON} = \frac{V_{IREF}}{G_{IMON} \times I_{OCP(TOTAL)}} \quad (14)$$

- The R_{ILIM} for each individual eFuse must be selected based on Equation 15.

$$R_{ILIM} = \frac{1.1 \times N \times R_{IMON}}{3} \quad (15)$$

Where N = number of devices in parallel chain. Figure 7-7 illustrates the response of the active current sharing block in TPS25984x during steady-state.

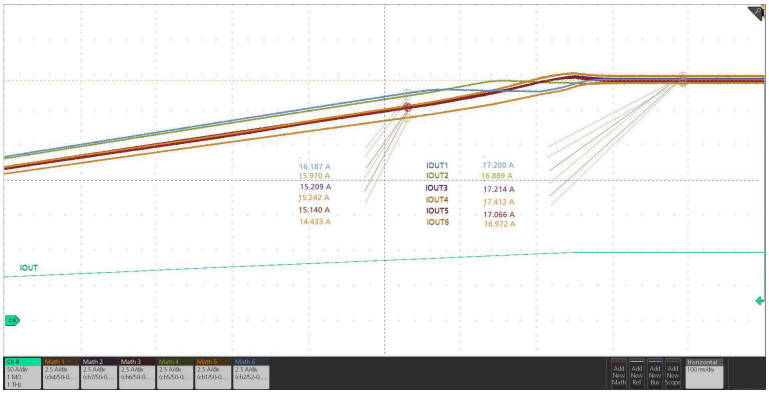

Intentional skew is introduced between the power path resistances for six devices and the load current is ramped up slowly. Equal current distribution is seen between all devices after the current through each device exceeds the active current sharing threshold.

Figure 7-7. Active Current Sharing During Steady-State with Six TPS25984x eFuses in Parallel

Copyright © 2025 Texas Instruments Incorporated

Note

The active current sharing scheme is engaged when the current through any eFuse while in steady-state exceeds the individual current sharing threshold set by the R_{ILIM} based on Equation 16.

$$R_{ILIM} = \frac{1.1 \times V_{IREF}}{3 \times G_{ILIM} \times I_{LIM(ACS)}} \quad (16)$$

The active current sharing scheme is disengaged when the total system current exceeds the system overcurrent (circuit-breaker) threshold ($I_{OCP(TOTAL)}$).

7.3.8.1 Current Balancing During Start-Up

The TPS25984x implements a proprietary current balancing mechanism during start-up, which allows multiple TPS25984x devices connected in parallel to share the inrush current and distribute the thermal stress across all the devices. This feature helps to complete a successful start-up with all the devices and avoid a scenario where some of the eFuses hit thermal shutdown prematurely. This in effect increases the inrush current capability of the parallel chain. The improved inrush performance makes it possible to support very large load capacitors on high current platforms without compromising the inrush time or system reliability.

7.3.9 Analog Junction Temperature Monitor (TEMP)

The device allows the system to monitor the junction temperature (T_J) accurately by providing an analog voltage on the TEMP pin which is proportional to the temperature of the die. This voltage can be connected to the ADC input of a host controller or eFuse with digital telemetry. In a multi-device parallel configuration, the TEMP outputs of all devices can be tied together. In this configuration, the TEMP signal reports the temperature of the hottest device in the chain.

Note

1. The TEMP pin voltage is used only for external monitoring and does not interfere with the overtemperature protection scheme of each individual device which is based purely on the internal temperature monitor.
2. TI recommends to add a capacitance of 22 pF on the TEMP pin to filter out glitches during system transients.

7.3.10 Overtemperature Protection

The TPS25984x employs an internal thermal shutdown mechanism to protect itself when the internal FET becomes too hot to operate safely. When the TPS259840 detects thermal overload, it shuts down and remains latched-off until the device is power cycled or re-enabled. When the TPS259841 detects thermal overload, it remains off until it has cooled down sufficiently. Thereafter, the device remains off for an additional delay of t_{RST} after which it automatically retries to turn on if it is still enabled.

Table 7-2. Overtemperature Protection Summary

Device	Enter TSD	Exit TSD
TPS259840 (Latch-Off)	$T_J \geq$ TSD	$T_J <$ TSD – TSD_{HYS} VDD cycled to 0 V and then above $V_{UVP(R)}$ or EN/UVLO toggled below $V_{SD(F)}$
TPS259841 (Auto-Retry)	$T_J \geq$ TSD	$T_J <$ TSD – TSD_{HYS} t_{RST} timer expired or VDD cycled to 0 V and then above $V_{UVP(R)}$ or EN/UVLO toggled below $V_{SD(F)}$

7.3.11 Fault Response and Indication ($\overline{FLT}$)

Table 7-3 summarizes the device response to various fault conditions.

Copyright © 2025 Texas Instruments Incorporated

Table 7-3. Fault Summary

Event or Condition	Device Response	Fault Latched Internally	$\overline{FLT}$ Pin Status	Delay
Steady-state	None	N/A	H	
Inrush	None	N/A	H	
Overtemperature	Shutdown	Y	L	
Undervoltage (EN/UVLO)	Shutdown	N	H	
Undervoltage (VDD UVP)	Shutdown	N	H	
Undervoltage (VIN UVP)	Shutdown	N	H	
Overvoltage (VIN OVP)	Shutdown	N	H	
Transient overcurrent	None	N	H	
Persistent overcurrent (steady-state)	Circuit-Breaker	Y	L	t_{ITIMER}
Persistent overcurrent (start-up)	Current Limit	N	L	
Short-circuit (primary mode)	Fast-trip	Y	L	t_{FT}
Short-circuit (secondary mode)	Fast-trip followed by current limited Start-up	N	H	
ILIM pin open (start-up)	Shutdown	Y	L	
ILIM pin short (start-up)	Shutdown (if I_{OUT} > I_{OC_BKP})	Y	L	
ILIM pin open (steady-state)	Active current sharing loop always active	N	H	
ILIM pin short (steady-state)	Active current sharing loop disabled	N	H	
IMON pin open (steady-state)	Shutdown	Y	L	
IMON pin short (steady-state)	Shutdown (If I_{OUT} > I_{OC_BKP})	Y	L	45 µs
IREF pin open (start-up)	Shutdown (If I_{OUT} > I_{OC_BKP})	Y	L	
IREF pin open (steady-state)	Shutdown (if I_{OUT} > I_{OC_BKP})	Y	L	t_{ITIMER}
IREF pin short (steady-state)	Shutdown	Y	L	
IREF pin short (start-up)	Shutdown	Y	L	
ITIMER pin forced to high voltage	Shutdown (if I_{OUT} > I_{OCP} or I_{OUT} > I_{OC_BKP})	Y	L	t_{SPFAIL_TMR}
Start-up timeout	Shutdown	Y	L	t_{SU_TMR}
FET health fault (G-S)	Shutdown	Y	L	10 us
FET health fault (G-D)	Shutdown	Y	L	
FET health fault (D-S)	Shutdown	N	L	t_{SU_TMR}

Copyright © 2025 Texas Instruments Incorporated

Table 7-3. Fault Summary (continued)

Event or Condition	Device Response	Fault Latched Internally	$\overline{FLT}$ Pin Status	Delay
External fault (SWEN pulled low externally while device is not in UV or OV)	Shutdown	Y	L	

$\overline{FLT}$ is an open-drain pin and must be pulled up to an external supply.

The device response after a fault varies based on the mode of operation:

1. During standalone or primary mode of operation (MODE = OPEN), the device latches a fault and follows the auto-retry or latch-off response as per the device selection. When the device turns on again, it follows the usual DVDT limited start-up sequence.
2. During the secondary mode of operation (MODE = GND), if the device detects any fault, it pulls the SWEN pin low momentarily to signal the event to the primary device and thereafter relies on the primary to take control of the fault response. However, if the primary device fails to register the fault, there i a failsafe mechanism in the secondary device to turn off the entire chain and enter a latch-off condition. Thereafter, the device can be turned on again only by power cycling VDD below $V_{UVP(F)}$ or by cycling EN/UVLO pin below $V_{SD(F)}$.

For faults that are latched internally, power cycling the part or pulling the EN/UVLO pin voltage below $V_{SD(F)}$ clears the fault and the pin is de-asserted. This action also clears the t_{RST} timer (auto-retry variants only). Pulling the EN/UVLO just below the UVLO threshold has no impact on the device in this condition. This is true for both latch-off and auto-retry variants.

7.3.12 Power-Good Indication (PG)

Power-Good indication is an active high output which is asserted high to indicate when the device is in steady-state and capable of delivering maximum power.

Table 7-4. PG Indication Summary

Event or Condition	FET Status	PG Pin Status	PG Delay
Undervoltage ($V_{EN} < V_{UVLO}$)	OFF	L	t_{PGD}
$V_{IN} < V_{UVP}$	OFF	L	
$V_{DD} < V_{UVP}$	OFF	L	
Overvoltage ($V_{IN} > V_{OVP}$)	OFF	L	t_{PGD}
Steady-state	ON	H	t_{PGA}
Inrush	ON	L	t_{PGA}
Transient overcurrent	ON	H	N/A
Circuit-breaker (persistent overcurrent followed by ITIMER expiry)	OFF	L (MODE = H) H (MODE = L)	t_{PGD} N/A
Fast-trip	OFF	L (MODE = H) H (MODE = L)	t_{PGD} N/A
ILM pin open	OFF	L (MODE = H) H (MODE = L)	$t_{ITIMER} + t_{PGD}$ N/A
ILM pin short	OFF	L (MODE = H) H(MODE = L)	t_{PGD} N/A
Overtemperature	Shutdown	L (MODE = H) H (MODE = L)	t_{PGD} N/A

Copyright © 2025 Texas Instruments Incorporated

After power up, PG is pulled low initially. The device initiates an inrush sequence in which the gate driver circuit starts charging the gate capacitance from the internal charge pump. When the FET gate voltage reaches the full overdrive indicating that the inrush sequence is complete and the device is capable of delivering full power, the PG pin is asserted HIGH after a de-glitch time (t_{PGA}).

The PG is de-asserted if the FET is turned off at any time during normal operation. The PG de-assertion de-glitch time is t_{PGD}.

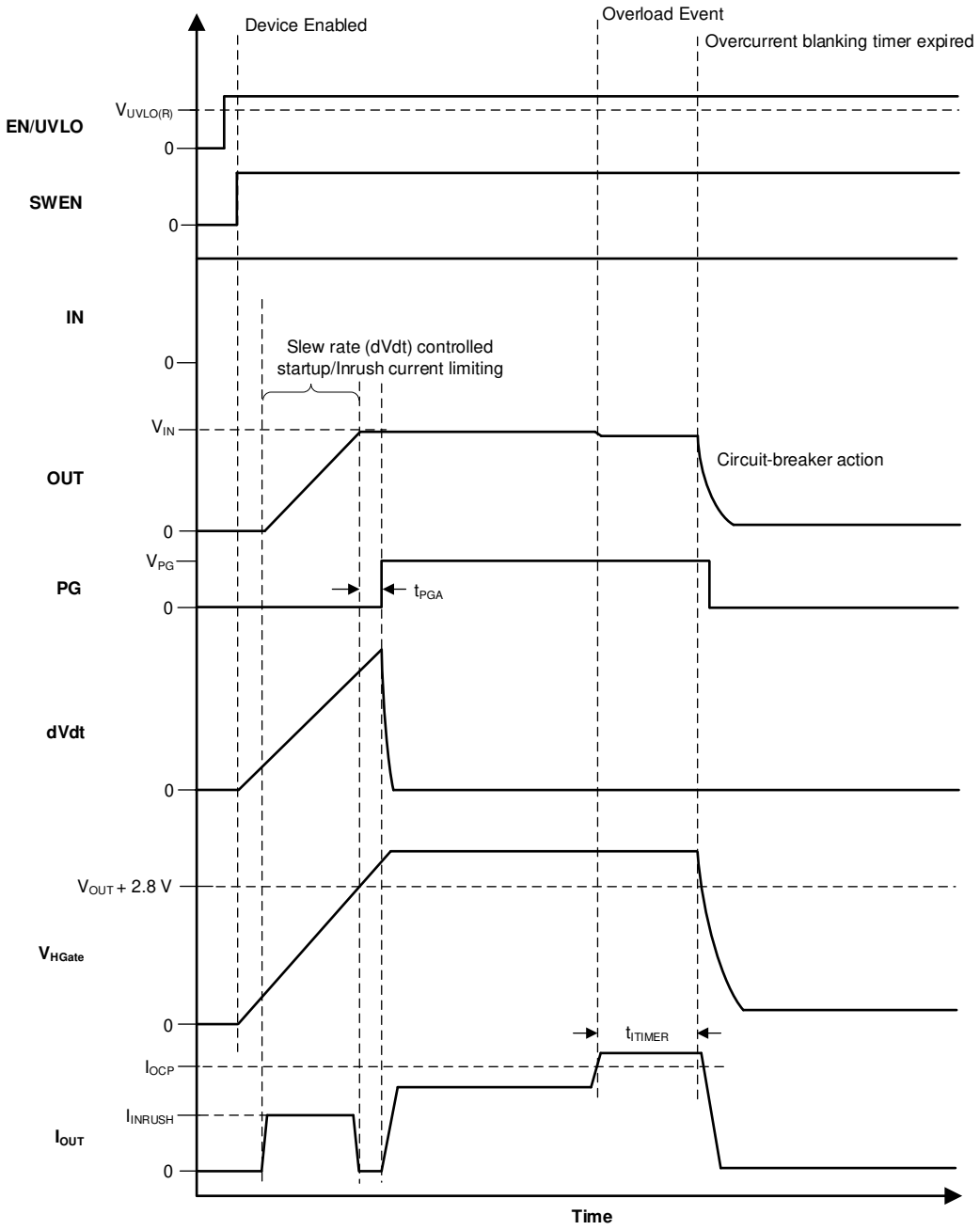

Figure 7-8. TPS25984x PG Timing Diagram

Note

The PG is an open-drain pin and must be pulled up to an external supply. Do not leave the PG pin floating or force the pin low externally during steady-state as it can interfere with the device operation.

When there is no supply to the device, the PG pin is expected to stay low. However, there is no active pulldown in this condition to drive this pin all the way down to 0 V. If the PG pin is pulled up to an independent supply which is present even if the device is unpowered, there can be a small voltage seen on this pin depending on the pin sink current, which is a function of the pullup supply voltage and resistor. Minimize the sink current to keep this pin voltage low enough not to be detected as a logic HIGH by associated external circuits in this condition.

When the device is used in secondary mode (MODE = GND) in conjunction with another TPS25984 device as a primary device in a parallel chain, it controls the PG assertion during start-up, but after the device reaches steady-state, it no longer has control over the PG de-assertion. Refer to the *Mode Selection (MODE)* for more details.

7.3.13 Output Discharge

The device has an integrated output discharge function which discharges the capacitors on the OUT pin using an internal constant current (I_{QOD}) to GND. The output discharge function is activated when the EN/UVLO is held low ($V_{SD(F)} < V_{EN} < V_{UVLO(F)}$) for a minimum interval (t_{QOD}). The output discharge function helps to rapidly remove the residual charge left on large output capacitors and prevents the bus from staying at some undefined voltage for extended periods of time. The output discharge is disengaged when $V_{OUT} < V_{FB}$ or if the device detects a fault.

The output discharge function can result in excessive power dissipation inside the device leading to an increase in junction temperature (T_J). The output discharge is disabled if the junction temperature (T_J) crosses TSD to avoid long-term degradation of the part.

Note

In a primary+secondary parallel configuration, TI recommends to hold EN/UVLO voltage below the $V_{UVLO(F)}$ threshold of the secondary device to activate output discharge for all the devices in the chain.

7.3.14 FET Health Monitoring

The TPS25984x can detect and report certain conditions which are indicative of a failure of the power path FET. If undetected or unreported, these conditions can compromise system performance by not providing power to the load correctly or by not providing the necessary level of protection. After a FET failure is detected, the TPS25984x tries to turn off the internal FET by pulling the gate low and asserts the $\overline{FLT}$ pin.

- **D-S short:** D-S short can result in a constant uncontrolled power delivery path formed from source to load, either due to a board assembly defect or due to internal FET failure. This condition is detected at start-up by checking if $V_{IN-OUT} < V_{DSFLT}$ before the FET is turned ON. If yes, the device engages the internal output discharge to try and discharge the output. If the V_{OUT} does not discharge below V_{FB} within a certain allowed interval, the device asserts the $\overline{FLT}$ pin.
- **G-D short:** The TPS25984x detects this kind of FET failure at all times by checking if the gate voltage is close to V_{IN} even when the internal control logic is trying to hold the FET in OFF condition.
- **G-S short:** The TPS25984x detects this kind of FET failure during start-up by checking if the FET G-S voltage fails to reach the necessary overdrive voltage within a certain timeout period (t_{SU_TMR}) after the gate driver is turned ON. While in steady-state, if the G-S voltage becomes low before the controller logic has signaled to the gate driver to turn off the FET, it is latched as a fault.

7.3.15 Single Point Failure Mitigation

The TPS25984x relies on the proper component connections and biasing on the IMON, ILIM, IREF, and ITIMER pins to provide overcurrent and short-circuit protection under all circumstances. As an added safety measure, the device uses the following mechanisms to ensure that the device provides some form of overcurrent protection even if any of these pins are not connected correctly in the system or the associated components have a failure in the field.

Copyright © 2025 Texas Instruments Incorporated

7.3.15.1 IMON Pin Single Point Failure

- **IMON pin open:** In this case, the IMON pin voltage is internally pulled up to a higher voltage and exceeds the threshold (V_{IREF}), causing the part to perform a circuit-breaker action even if there is no significant current flowing through the device.
- **IMON pin shorted to GND directly or through a very low resistance:** In this case, the IMON pin voltage is held at a low voltage and is not allowed to exceed the threshold (V_{IREF}) even if there is significant current flowing through the device, thereby rendering the primary overcurrent protection mechanism ineffective. The device relies on an internal overcurrent sense mechanism to provide some protection as a backup. If the device detects that the backup current sense threshold (I_{OC_BKP}) is exceeded but at the same time the primary overcurrent detection on IMON pin fails, it triggers single point failure detection and latches a fault. The FET is turned off and the $\overline{FLT}$ pin is asserted.

7.3.15.2 ILIM Pin Single Point Failure

- **ILIM pin open:** In this case, the ILIM pin voltage is internally pulled up to a higher voltage and exceeds the V_{IREF} threshold, causing the part to engage the current limit even if there is no significant current flowing through the device.
- **ILIM pin shorted to GND directly or through a very low resistance:** In this case, the ILIM pin voltage is held at a low voltage and is not allowed to exceed the start-up current limit threshold even if there is significant current flowing through the device, thereby rendering the primary current limit mechanism ineffective during start-up. The device relies on an internal overcurrent detection mechanism to provide some protection as a backup. If the device detects that the backup overcurrent threshold (IOC_BKP) is exceeded but at the same time the primary overcurrent detection on ILIM pin fails, it triggers single point failure detection and latches a fault. The FET is turned off and the $\overline{FLT}$ pin is asserted.

7.3.15.3 IREF Pin Single Point Failure

- **IREF pin open or forced to higher voltage:** In this case, the IREF pin (V_{IREF}) is pulled up internally or externally to a voltage which is higher than the target value as per the recommended I_{OCP} or I_{LIM} calculations, preventing the primary circuit-breaker, active current limit, and short-circuit protection from getting triggered even if there is significant current flowing through the device. The device relies on an internal overcurrent detection mechanism to provide some protection as a backup. If the device detects that the backup overcurrent threshold is exceeded but at the same the primary overcurrent or short-circuit detection on ILIM or IMON pin fails, it triggers single point failure detection and latches a fault. The FET is turned off and the $\overline{FLT}$ pin is asserted.
- **IREF pin shorted to GND:** In this case, the V_{IREF} threshold is set to 0 V, causing the part to perform active current limit or circuit-breaker action even if there is no significant current flowing through the device.

7.3.15.4 ITIMER Pin Single Point Failure

- **ITIMER pin open or short to GND:** In this case, the ITIMER pin is already discharged below $V_{ITIMERTHR}$ and hence indicates overcurrent blanking timer expiry instantaneously after an overcurrent event and triggers a circuit-breaker action without any delay.
- **ITIMER pin forced to some voltage higher than $V_{ITIMERTHR}$:** In this case, the ITIMER pin is unable to discharge below $V_{ITIMERTHR}$ and hence fails to indicate overcurrent blanking timer expiry, thereby rendering the primary circuit-breaker mechanism ineffective. The device relies on a backup overcurrent timer mechanism to provide some protection as a backup. If the device detects an overcurrent event on either the IMON pin or the backup overcurrent detection circuit, the device engages the internal backup time and after the timer expires ($t_{SPFLTMR}$), it latches a fault. The FET is turned off and the $\overline{FLT}$ pin is asserted.

7.4 Device Functional Modes

The features of the device depend on the operating mode. Table 7-5 and Table 7-6 summarize the device functional modes.

Table 7-5. Device Functional Modes Based on EN/UVLO Pin

Pin: EN/UVLO	Device State	Output Discharge
> $V_{UVLO(R)}$	Fully ON	Disabled

Copyright © 2025 Texas Instruments Incorporated

Table 7-5. Device Functional Modes Based on EN/UVLO Pin (continued)

Pin: EN/UVLO	Device State	Output Discharge
> $V_{SD(F)}$, < $V_{UVLO(F)}$ (< t_{QOD})	FET OFF	Disabled
> $V_{SD(F)}$, < $V_{UVLO(F)}$ (> t_{QOD})	FET OFF	Enabled
< $V_{SD(F)}$	Shutdown	Disabled

Table 7-6. Device Functional Modes Based on MODE Pin

Pin: MODE	Device Configuration
Open	Primary or standalone
GND	Secondary

Copyright © 2025 Texas Instruments Incorporated

8 Application and Implementation

Note

Information in the following applications sections is not part of the TI component specification, and TI does not warrant its accuracy or completeness. TI's customers are responsible for determining suitability of components for their purposes, as well as validating and testing their design implementation to confirm system functionality.

8.1 Application Information

The TPS25984x is a high-current eFuse that is typically used for power rail protection applications. The device operates from 4.5 V to 16 V with input overvoltage and adjustable undervoltage protection. The device provides the ability to control inrush current and offers protection against overcurrent and short-circuit conditions. The device can be used in a variety of systems such as server motherboards, add-on cards, graphics cards, accelerator cards, enterprise switches, routers, and so forth. The design procedure explained in the subsequent sections can be used to select the supporting component values based on the application requirements. Additionally, a spreadsheet design tool *TPS25984x Design Calculator* is available on request.

8.1.1 Single Device, Standalone Operation

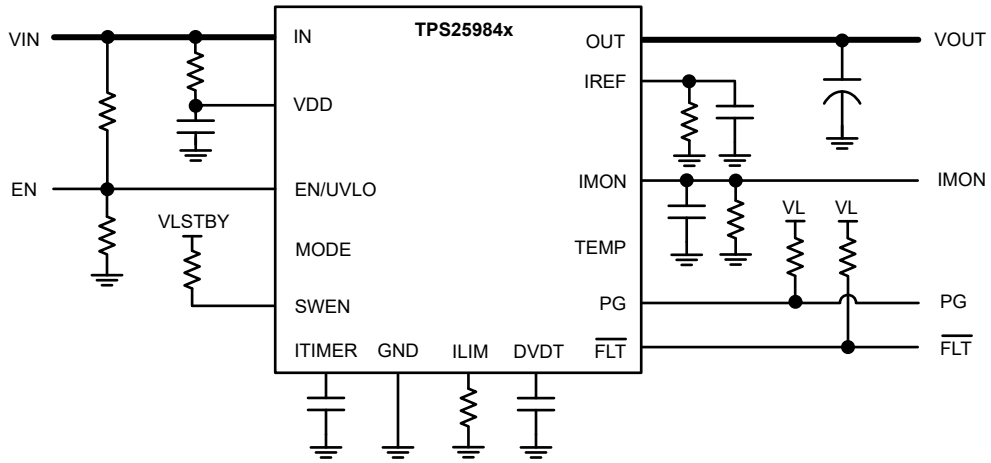

Figure 8-1. Single Device, Standalone Operation

Note

The MODE pin is left OPEN to configure for standalone operation.

Other variations:

1. The IREF pin can be driven from an external reference voltage source.
2. In a host MCU controlled system, EN/UVLO can be connected to a GPIO pin to control the device. IMON pin voltage can be monitored using an ADC. The host MCU can use a DAC to drive IREF to change the current limit threshold dynamically.
3. The device can be used as a simple high current load switch without adjustable overcurrent or fast-trip protection by tying the ILIM and IMON pins to GND and leaving the IREF pin open. The inrush current protection, fixed fast-trip and internal fixed overcurrent protection are still active in this condition.

Copyright © 2025 Texas Instruments Incorporated

8.1.2 Multiple Devices, Parallel Connection

Applications which need higher current capability can use two or more TPS25984x devices connected in parallel as shown in Figure 8-2.

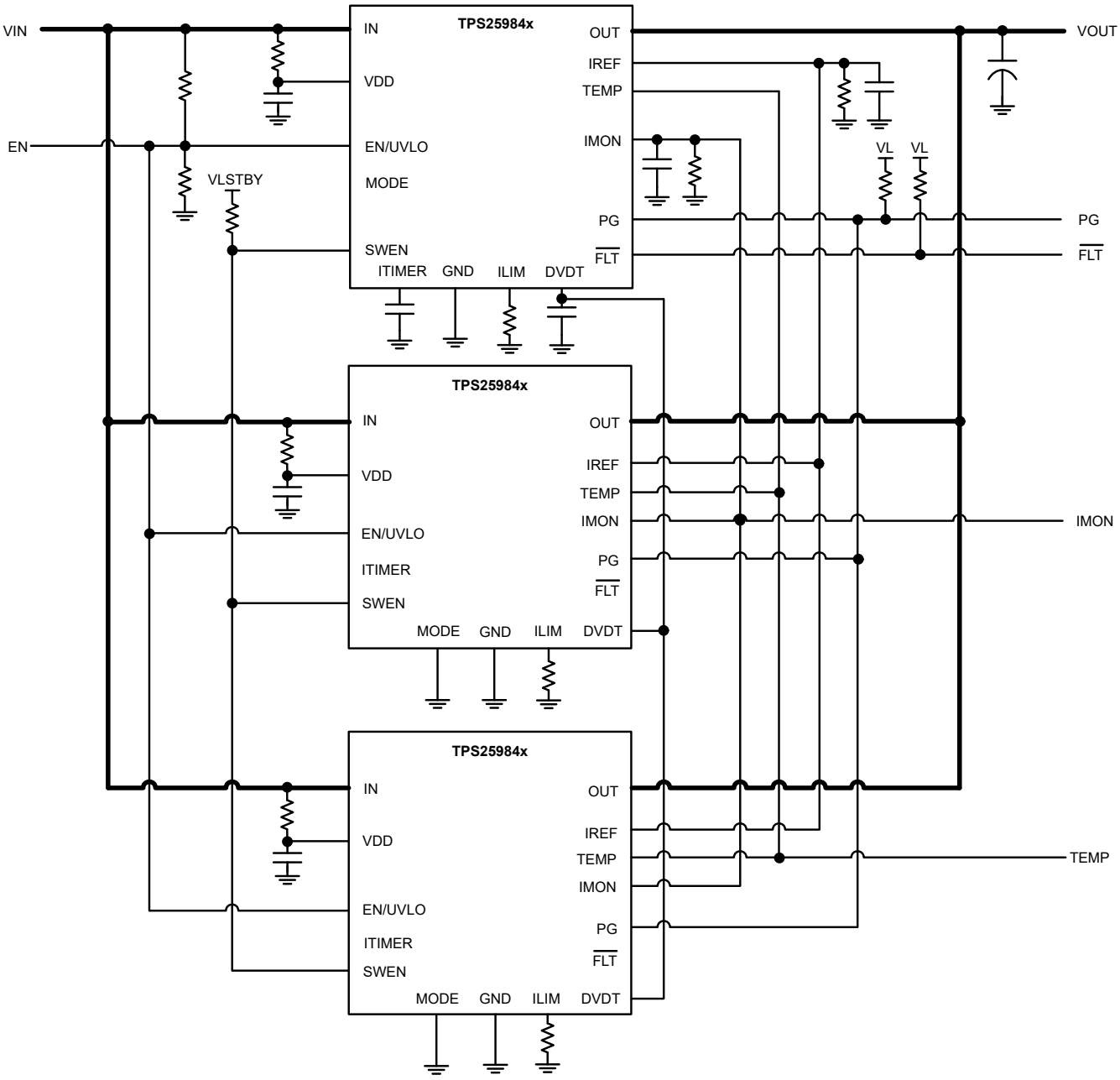

Figure 8-2. Devices Connected in Parallel for Higher Current Capability

In this configuration, one TPS25984x device is designated as the primary device and controls the other TPS25984x devices in the chain which are designated as secondary devices. This configuration is achieved by connecting the primary device as follows:

1. VDD is connected to IN through an R-C filter.
2. MODE pin is left OPEN.
3. ITIMER is connected through capacitor to GND.
4. DVDT is connected through capacitor to GND.

Copyright © 2025 Texas Instruments Incorporated

5. IREF is connected through resistor to GND.
6. IMON is connected through resistor to GND.
7. ILIM is connected through resistor to GND.
8. SWEN is pulled up to a 3.3-V to 5-V standby rail. This rail must be powered up independent of the eFuse.

The secondary devices must be connected in the following manner:

1. VDD is connected to IN through a R-C filter.
2. MODE pin is connected to GND.
3. ITIMER pin is left OPEN.
4. ILIM is connected through resistor to GND.

The following pins of all devices must be connected together:

1. IN
2. OUT
3. EN/UVLO
4. DVDT
5. SWEN
6. PG
7. IMON
8. IREF

Note

The PG pin must be pulled up to an appropriate supply voltage as per the *Recommended Operating Conditions* table.

In this configuration, all the devices are powered up and enabled simultaneously.

Power up: After power up or enable, all devices initially hold their SWEN low till the internal blocks are biased and initialized correctly. After that, each device releases its own SWEN. After all devices have released their SWEN, the combined SWEN goes high and the devices are ready to turn on their respective FETs at the same time.

Inrush: During inrush, because the DVDT pins are tied together to a single DVDT capacitor all the devices turn on the output with the same slew rate (SR). Choose the common DVDT capacitor (C_{DVDT}) as per the following Equation 17 and Equation 18.

$$SR(V/ms) = \frac{I_{INRUSH}(A)}{C_{LOAD}(mF)} \quad (17)$$

$$C_{DVDT}(pF) = \frac{42000}{SR(V/ms)} \quad (18)$$

In this condition, the internal balancing circuit ensures that the load current is shared among all devices during start-up. This action prevents a situation where some devices turn on faster than others and experience more thermal stress as compared to other devices. This can potentially result in premature or partial shutdown of the parallel chain, or even SOA damage to the devices. The current balancing scheme ensures the inrush capability of the chain scales according to the number of devices connected in parallel, thereby ensuring successful start-up with larger output capacitances or higher loading during start-up.

All devices hold their respective PG signals low during start-up. After the output ramps up fully and reaches steady-state, each device releases its own PG pulldown. Because the DVDT pins of all devices are tied together, the internal gate high detection of all devices is synchronized. There can be some threshold or timing mismatches between devices leading to PG assertion in a staggered manner. However, because the PG pins of all devices are tied together, the combined PG signal becomes high only after all devices have released their PG pulldown. This signals the downstream load that it is okay to draw power.

Copyright © 2025 Texas Instruments Incorporated

Steady-state: During steady-state, all devices share current equally using the active current sharing mechanism which actively regulates the respective device R_{DSON} to evenly distribute current across all the devices in the parallel chain.

Overcurrent during steady-state: The circuit-breaker threshold for the parallel chain is based on the total system current rather than the current flowing through individual devices. This is done by connecting the IMON pins of all the devices together. Similarly, the IREF pins of all devices are tied together and connected to a single R_{IREF} (or an external V_{IREF} source) to generate a common reference for the overcurrent protection block in all the devices. This action helps minimize the contribution of I_{IREF} variation and R_{IREF} tolerance to the overall mismatch in overcurrent threshold between devices. In this case, choose the combined R_{IMON} as per the following Equation 19:

$$R_{IMON} = \frac{I_{IREF} \times R_{IREF}}{G_{IMON} \times I_{OCP(TOTAL)}} \quad (19)$$

The R_{ILIM} value for each individual eFuse must be selected based on the following Equation 20.

$$R_{ILIM} = \frac{1.1 \times N \times R_{IMON}}{3} \quad (20)$$

Where N = number of devices in parallel chain.

Other variations:

The IREF pin can be driven from an external voltage reference (V_{IREF}).

$$R_{IMON} = \frac{V_{IREF}}{G_{IMON} \times I_{OCP(TOTAL)}} \quad (21)$$

During an overcurrent event, the overcurrent detection of all the devices is triggered simultaneously. This in turn triggers the overcurrent blanking timer (ITIMER) on each device. However, only the primary device uses the ITIMER expiry event as a trigger to pull the SWEN low for all the devices, thereby initiating the circuit-breaker action for the whole chain. This mechanism ensures that mismatches in the current distribution, overcurrent thresholds and ITIMER intervals among the devices do not degrade the accuracy of the circuit-breaker threshold of the complete parallel chain or the overcurrent blanking interval.

However, the secondary devices also start their backup overcurrent timer and can trigger the shutdown of the whole chain if the primary device fails to do so within a certain interval.

Severe overcurrent (short-circuit): If there is a severe fault at the output (for example, output shorted to ground with a low impedance path) during steady-state operation, the current builds up rapidly to a high value and triggers the fast-trip response in each device. The devices use two thresholds for fast-trip protection – a user-adjustable threshold (I_{SFT} = 2 × I_{OCP} in steady-state or I_{SFT} = 2 × I_{LIM} during inrush) as well as a fixed threshold (I_{FFT} only during steady-state). After the fast-trip, the devices enter into a latch-off fault condition till the device is power cycled or re-enabled or the auto-retry timer expires (only for auto-retry variants).

Copyright © 2025 Texas Instruments Incorporated

8.1.3 Multiple eFuses, Parallel Connection With PMBus®

Applications which need higher current input protection along with digital interface for telemetry, control, configurability can use one or more TPS25984x devices in parallel with TPS25990x as shown in Figure 8-3.

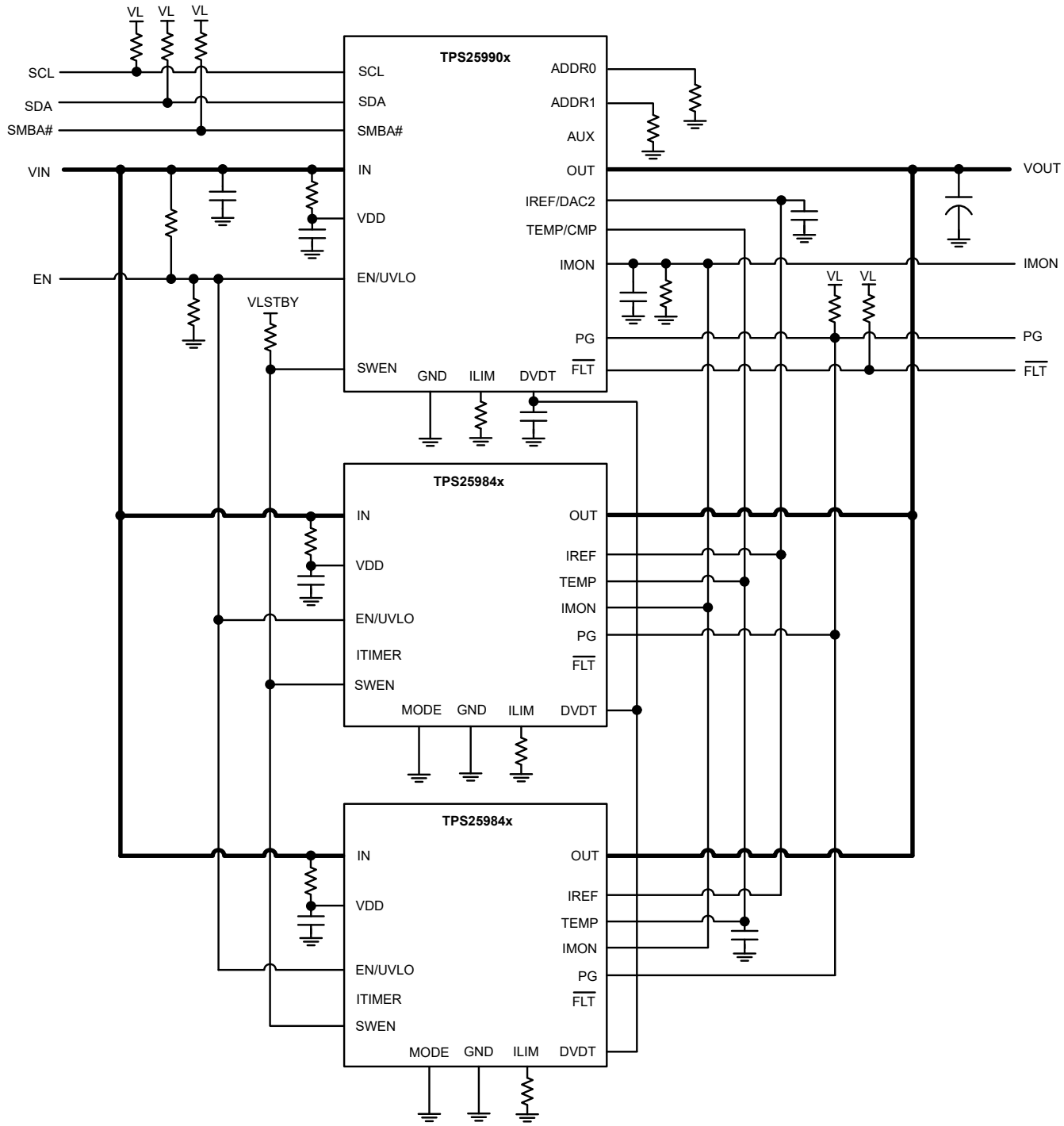

Figure 8-3. TPS25990x Connected in Parallel With TPS25984x For Higher Current Support With PMBus®

TPS25990x is a 60A integrated eFuse with PMBus® telemetry interface.

In this configuration, the TPS25990x acts as the primary device and controls the other TPS25984x devices in the chain which are designated as secondary devices. This configuration is achieved by connecting the primary device as follows:

1. VDD is connected to IN through an R-C filter.
2. DVDT is connected through capacitor to GND.
3. IREF is connected through capacitor to GND.
4. IMON is connected through resistor to GND.
5. ILIM is connected through resistor to GND.

SWEN is pulled up to a 3.3V to 5V standby rail. This rail must be powered up independent of the eFuse ON/OFF status.

The secondary devices must be connected in the following manner:

1. VDD is connected to IN through a R-C filter.
2. MODE pin is connected to GND.
3. ITIMER pin is left OPEN.
4. ILIM is connected through resistor to GND.

The following pins of all devices must be connected together:

1. IN
2. OUT
3. EN/UVLO
4. DVDT
5. SWEN
6. PG
7. IMON
8. IREF
9. TEMP

Note

The PG pin must be pulled up to an appropriate supply voltage as per the *Recommended Operating Conditions* table.

In this configuration, all the devices are powered up and enabled simultaneously.

- The TPS25990x monitors the combined VIN, VOUT, IMON, TEMP and reports over the PMBus® telemetry interface.
- THE OVLO threshold is set to max value in all devices by default. For TPS25984x devices, the OV threshold is fixed in hardware and cannot be changed. The TPS25990x OV threshold can be lowered through PMBus® writes to the VIN_OV_FAULT register. In this case, the TPS25990x uses the SWEN pin to turn off the TPS25984x devices during OV conditions.
- The UVLO threshold for all devices is set by the external resistor divider from IN to GND on the EN/UVLO pin. The TPS25990x UV threshold can be changed through PMBus® writes to the VIN_UV_FAULT register. In this case, the TPS25990x uses the SWEN pin to turn off the TPS25984x devices during UV conditions.
- During inrush, the output of all the devices are ramped together based on the DVDT cap. However, the TPS25990x DVDT sourcing current can be configured through the PMBus® to change the inrush behavior of the whole chain. The TPS25990x controls the DVDT ramp rate for the whole chain and secondary devices simply follow the ramp rate.
- The TPS25990x controls the overall overcurrent threshold of the parallel chain by setting the VIREF threshold voltage using internal DAC. The VIREF voltage can be programmed through PMBus® to change the overcurrent threshold.

Copyright © 2025 Texas Instruments Incorporated

- The TPS25990x controls the transient overcurrent blanking interval (t_{OC_TIMER}) for the whole system through PMBus® writes to the OC_TIMER register. After the digital timer expires, the TPS25990x pulls the SWEN pin low to signal all devices to break the circuit simultaneously.
- The system Power Good (PG) indication is a combination of all the individual device PG indications. All the devices hold respective PG pins low until the power FET is fully turned on. After all devices have reached steady-state, the respective PG pin pulldown is released and the PG signal for the whole chain is asserted high. The TPS25984x secondary devices have control over the system PG assertion only during startup. After in steady state, only the TPS25990x controls the de-assertion of the PG based on the VOUT_PGTH register setting.
- The fault indication ($\overline{FLT}$) for the whole system is provided by TPS25990x. However, each secondary device also asserts $\overline{FLT}$ independently.

Power up: After power up or enable, all the eFuse devices initially hold SWEN low until the internal blocks are biased and initialized correctly. After that, each device releases SWEN. After all devices have released SWEN, the combined SWEN goes high and the devices are ready to turn on respective FETs at the same time.

Inrush: During inrush, because the DVDT pins are tied together to a single DVDT capacitor all the devices turn on the output with the same slew rate (SR). Choose the common DVDT capacitor (C_{DVDT}) as per Equation 22 and Equation 23.

$$SR\left(\frac{V}{ms}\right) = \frac{I_{INRUSH}\,(mA)}{C_{OUT}\,(\mu F)} \tag{22}$$

$$C_{dVdt}\,(pF) = \frac{42000 \times k}{SR\left(\frac{V}{ms}\right)} \tag{23}$$

Refer to *TPS25990x* for more details.

The internal balancing circuits makes sure that the load current is shared among all devices during start-up. This action prevents a situation where some devices turn on faster than others and experience more thermal stress as compared to other devices. This can potentially result in premature or partial shutdown of the parallel chain, or even SOA damage to the devices. The current balancing scheme makes sure the inrush capability of the chain scales according to the number of devices connected in parallel, thereby providing successful start-up with larger output capacitances or higher loading during start-up. All devices hold respective PG signals low during start-up. After the output ramps up fully and reaches steady-state, each device releases PG pulldown. Because the DVDT pins of all devices are tied together, the internal gate high detection of all devices is synchronized. There can be some threshold or timing mismatches between devices leading to PG assertion in a staggered manner. However, because the PG pins of all devices are tied together, the combined PG signal becomes high only after all devices have released PG pulldown. This signals the downstream load that is okay to draw power.

Steady-state: During steady-state, all devices share current nearly equally using the active current sharing mechanism which actively regulates the respective device RDSON to evenly distribute current across all the devices in the parallel chain. After PG is asserted, de-assertion is controlled only by TPS25990x and based on VOUT_PGTH register setting.

Overcurrent during steady-state: The circuit-breaker threshold for the parallel chain is based on the total system current rather than the current flowing through individual devices. This is done by connecting the IMON pins of all the devices together to a single resistor (R_{IMON}) to GND. Similarly, the IREF pins of all devices are tied together and TPS25990x uses internal programmable DAC (VIREF) to generate a common reference for the overcurrent protection block in all the devices. This action helps minimize the contribution of V_{IREF} variation to the overall mismatch in overcurrent threshold between devices.

In this case, choose the R_{IMON} as per Equation 24:

$$R_{IMON} = \frac{V_{IREF}}{G_{IMON} \times I_{OCP(TOTAL)}} \tag{24}$$

Copyright © 2025 Texas Instruments Incorporated

The start-up current limit and active current sharing threshold for each device is set independently using the ILIM pin. The R_{ILIM} value for each individual eFuse must be selected based on Equation 25:

$$R_{ILIM} = \frac{1.1 \times N \times R_{IMON}}{3} \quad (25)$$

Where N = number of devices in parallel chain (1 × TPS25990x + (N - 1) × TPS25984x)

Other variations: The IREF pin can be driven from an external precision voltage reference.

During an overcurrent event, the overcurrent detection of all the devices is triggered simultaneously. This in turn triggers the overcurrent blanking timer (OC_TIMER) in TPS25990x. The TPS25990x uses the OC_TIMER expiry event as a trigger to pull the SWEN low for all the devices, thereby initiating the circuit-breaker action for the whole chain at the same time. This mechanism makes sure that mismatches in the current distribution, overcurrent thresholds, and OC_TIMER intervals among the devices do not degrade the accuracy of the circuit-breaker threshold of the complete parallel chain or the overcurrent blanking interval. However, the secondary devices also maintain a backup overcurrent timer and can trigger the shutdown of the whole chain if the primary device fails to do so within a certain interval.

Severe overcurrent (short-circuit): If there is a severe fault at the output (for example, output shorted to ground with a low impedance path), the current builds up rapidly to a high value and triggers the fast-trip response in each device. The devices use two thresholds for fast-trip protection; a user-adjustable threshold (I_{SFT} = 2 × I_{OCP} in steady-state or I_{SFT} = 1.5 × I_{LIM} during inrush) as well as a fixed threshold (I_{FFT} only during steady-state). After the fast-trip, the TPS25990x relies on the SC_RETRY configured bit in the DEVICE_CONFIG register to determine if the whole chain enters a latched fault or performs a fast recovery by restarting in current limit manner. If a latched fault is entered, the devices remain latched off until the device is power cycled or re-enabled, or auto-retry with a delay based on the RETRY_CONFIG register setting is triggered.

8.1.4 Digital Telemetry Using External Microcontroller

Systems which need digital telemetry, control, and configurability along with high current eFuse functionality can use TPS25984x devices in conjunction with a microcontroller as shown in Figure 8-4.

Copyright © 2025 Texas Instruments Incorporated

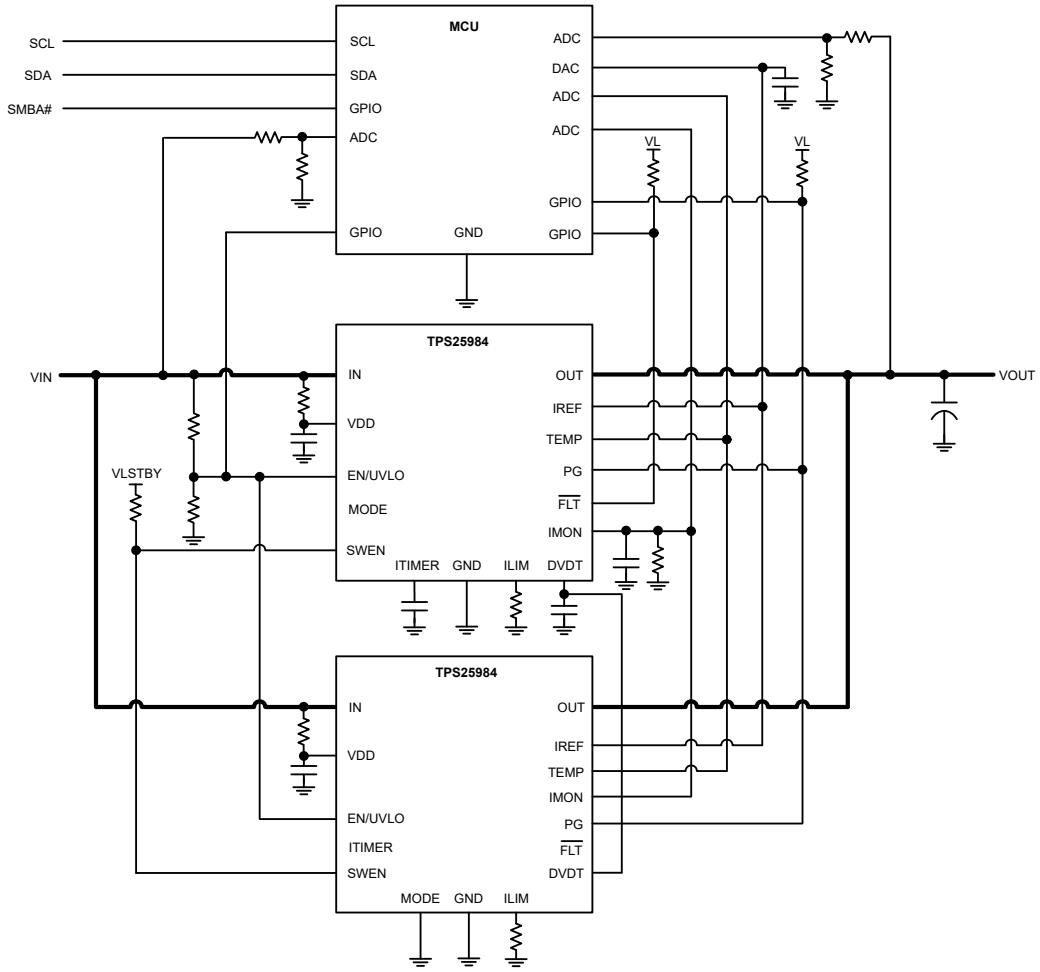

Figure 8-4. Digital Telemetry Using External Microcontroller

The basic circuit connections for the eFuses are the same for the single or multiple parallel device configuration. In addition, the following connections can be made to the microcontroller:

- IMON is connected to an ADC input of microcontroller for monitoring the load current.
- EN/UVLO is connected to GPIO of microcontroller to allow digital ON and OFF control of the eFuse.
- PG and $\overline{\text{FLT}}$ pins are connected to GPIO of microcontroller to allow digital monitoring of the eFuse status.
- VIN and VOUT rails are connected to the ADC inputs of microcontroller (through resistor ladder to appropriately step down the voltage) for monitoring the bus voltages.
- TEMP is connected to an ADC input of microcontroller for monitoring the eFuse die temperature.
- IREF can be optionally connected to a DAC output of the microcontroller to dynamically change the reference voltage for overcurrent and short-circuit current thresholds.

Note

1. The PG pin must be pulled up to an appropriate supply voltage as per the *Recommended Operating Conditions* table.

Copyright © 2025 Texas Instruments Incorporated

8.2 Typical Application: 12-V, 3.3-kW Power Path Protection in Data Center Servers

8.2.1 Application

This design example considers a 12-V system operating voltage with a tolerance of ±10%. The maximum steady-state load current is 275 A. If the load current exceeds 300 A, the eFuse circuit must allow transient overload currents up to a 16-ms interval. For persistent overloads lasting longer than that, the eFuse circuit must break the circuit and then latch-off. The eFuse circuit must charge a bulk capacitance of 50 mF and support approximately 10% of the steady-state load during start-up. Figure 8-5 shows the application schematic for this design example.

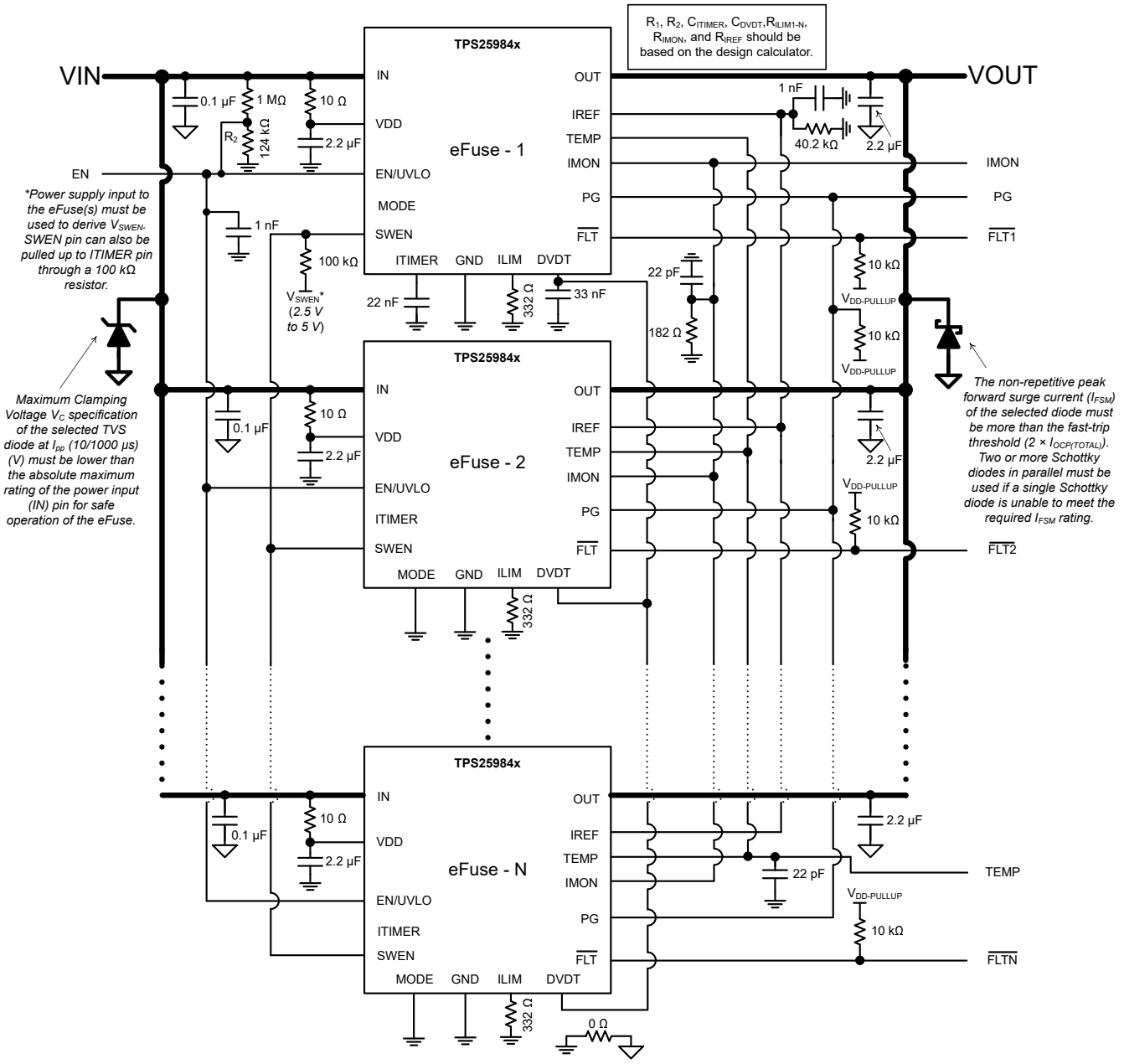

Figure 8-5. Application Schematic for a 12-V, 3.3-kW Power Path Protection Circuit

Copyright © 2025 Texas Instruments Incorporated

8.2.2 Design Requirements

Table 8-1 shows the design parameters for this application example.

Table 8-1. Design Parameters

PARAMETER	VALUE
Input voltage range (V_{IN})	10.8 V – 13.2 V
Maximum DC load current ($I_{OUT(max)}$)	275 A
Maximum output capacitance (C_{LOAD})	50 mF
Are all the loads off until the PG is asserted?	No
Load at start-up ($R_{LOAD(Startup)}$)	0.48 Ω (equivalent to approximately 10% of the maximum steady-state load)
Maximum ambient temperature	55°C
Transient overload blanking timer	16 ms
Output turn on (soft-start) time	10 ms
Output voltage slew rate	1.2 V/ms
Need to survive a “Hot-Short” on output condition ?	Yes
Need to survive a “power up into short” condition?	Yes
Can a board be hotplugged in or power cycled?	Yes
Load current monitoring needed?	Yes
Fault response	Latch-off

8.2.3 Detailed Design Procedure

- **Determining the number of eFuse devices to be used in parallel**

  By factoring in a small variation in the junction to ambient thermal resistance ($R_{\theta JA}$), a single TPS25984x eFuse is rated at a maximum steady state DC current of 55 A at an ambient temperature of 70°C. Therefore, Equation 26 can be used to calculate the number of devices (N) to be in parallel to support the maximum steady state DC load current ($I_{LOAD(max)}$), for which the solution must be designed.

$$N \geq \frac{I_{OUT(max)}\,(A)}{55\,A} \tag{26}$$

  According to Table 8-1, $I_{OUT(max)}$ is 275 A. Therefore, five (5) TPS25984 eFuses are connected in parallel.

- **Setting up the primary and secondary devices in a parallel configuration**

  The MODE pin is used to configure one TPS25984x eFuse as the primary device in a parallel chain along with the other TPS25984x eFuses as the secondary devices. As a result, some of the TPS25984 pin functionalities can be changed to facilitate primary and secondary configuration as described in *Multiple Devices, Parallel Connection*.

  Leaving the MODE pin open configures the corresponding device as the primary one. For the secondary devices, this pin must be connected to GND.

- **Selecting the C_{DVDT} capacitor to control the output slew rate and start-up time**

  For a robust design, the junction temperature of the device must be kept below the absolute maximum rating during both dynamic (start-up) and steady-state conditions. Typically, dynamic power stresses are orders of magnitude greater than static stresses, so it is crucial to establish the right start-up time and inrush current limit for the capacitance in the system and the associated loads to avoid thermal shutdown during start-up.

Copyright © 2025 Texas Instruments Incorporated

Table 8-2 summarizes the formulas for calculating the average inrush power loss on the eFuses in the presence of different loads during start-up if the power good (PG) signal is not used to turn on all the downstream loads.

Table 8-2. Calculation of Average Power Loss During Inrush

Type of Loads During Start-Up	Expressions to Calculate the Average Inrush Power Loss
Only output capacitor of C_{LOAD} (µF)	$\frac{V_{IN}^2 C_{LOAD}}{2T_{ss}}$ (27)
Output capacitor of C_{LOAD} (µF) and constant resistance of $R_{LOAD(Startup)}$ (Ω) with turn-ON threshold of V_{RTH} (V)	$\frac{V_{IN}^2 C_{LOAD}}{2T_{ss}} + \frac{V_{IN}^2}{R_{LOAD(Startup)}}\left[\frac{1}{6} - \left\{\frac{1}{2}\left(\frac{V_{RTH}}{V_{IN}}\right)^2\right\} + \left\{\frac{1}{3}\left(\frac{V_{RTH}}{V_{IN}}\right)^3\right\}\right]$ (28)
Output capacitor of C_{LOAD} (µF) and constant current of $I_{LOAD(Startup)}$ (A) with turn-ON threshold of V_{CTH} (V)	$\frac{V_{IN}^2 C_{LOAD}}{2T_{ss}} + V_{IN} I_{LOAD(Startup)}\left[\frac{1}{2} - \left(\frac{V_{CTH}}{V_{IN}}\right) + \left\{\frac{1}{2}\left(\frac{V_{CTH}}{V_{IN}}\right)^2\right\}\right]$ (29)
Output capacitor of C_{LOAD} (µF) and constant power of $P_{LOAD(Startup)}$ (W) with turn-ON threshold of V_{PTH} (V)	$\frac{V_{IN}^2 C_{LOAD}}{2T_{ss}} + P_{LOAD(Startup)}\left[\ln\left(\frac{V_{PTH}}{V_{IN}}\right) + \left(\frac{V_{PTH}}{V_{IN}}\right) - 1\right]$ (30)

Where V_{IN} is the input voltage and T_{ss} is the start-up time.

With the different combinations of loads during start-up, the total average inrush power loss (P_{INRUSH}) can be calculated using the formulas described in Table 8-2. For a successful start-up, the system must satisfy the condition stated in Equation 31.

$$P_{INRUSH}(W)\sqrt{T_{ss}(s)} < 10 \times N \quad (31)$$

Where N denotes the number of eFuses in parallel and 10 W√s is the SOA limit of a single TPS25984x eFuse. This equation can be used to obtain the maximum allowed T_{ss}.

Note

TI recommends to use a T_{ss} in the range of 5 ms to 120 ms to prevent start-up issues.

A capacitor (C_{DVDT}) must be added at the DVDT pin to GND to set the required value of T_{ss} as calculated above. Equation 32 is used to compute the value of C_{DVDT}. The DVDT pins of all the eFuses in a parallel chain must be connected together.

$$C_{DVDT}(pF) = \frac{42000}{V_{IN}(V)/T_{ss}(ms)} \quad (32)$$

In this design example, C_{LOAD} = 50 mF, $R_{LOAD(Startup)}$ = 0.48 Ω, V_{RTH} = 0 V, V_{IN} = 12 V, and T_{ss} = 10 ms. P_{INRUSH} is calculated to be 410 W using the equations provided in the Table 8-2. It can be verified that the system satisfies condition stated in Equation 31 and therefore capable of a successful start-up. If Equation 31 does not hold true, start-up loads or T_{ss} must be tuned to prevent chances of thermal shutdown during start-up. Using V_{IN} = 12 V, T_{ss} = 10 ms, and Equation 32, the required C_{DVDT} value can be calculated to be 35 nF. The closest standard value of C_{DVDT} is 33 nF with 10% tolerance and DC voltage rating of 25 V.

Copyright © 2025 Texas Instruments Incorporated

Note

In some systems, there can be active load circuits (for example, DC-DC converters) with low turn-on threshold voltages which can start drawing power before the eFuse has completed the inrush sequence. This action can cause additional power dissipation inside the eFuse during start-up and can lead to thermal shutdown. TI recommends using the Power Good (PG) pin of the eFuse to enable and disable the load circuit. This action ensures that the load is turned on only when the eFuse has completed its start-up and is ready to deliver full power without the risk of hitting thermal shutdown.

- **Selecting the R_{IREF} resistor to set the reference voltage for overcurrent protection and active current sharing**

  In this parallel configuration, the IREF internal current source (I_{IREF}) of the primary eFuse interacts with the external IREF pin resistor (R_{IREF}) to generate the reference voltage (V_{IREF}) for the overcurrent protection and active current sharing blocks. When the voltage at the IMON pin (V_{IMON}) is used as an input to an ADC to monitor the system current or to implement the Platform Power Control (Intel® PSYS) functionality inside the VR controller, V_{IREF} must be set to half of the maximum voltage range of the ISYS_IN input of the controller. This action provides the necessary headroom and dynamic range for the system to accurately monitor the load current up to the fast-trip threshold (2 × I_{OCP}). Equation 33 is used to calculate the value of R_{IREF}.

$$V_{IREF} = I_{IREF} \times R_{IREF} \tag{33}$$

  In this design example, V_{IREF} is set at 1 V. With I_{IREF} = 24.99 µA (typical), we can calculate the target R_{IREF} to be 40 kΩ. The closest standard value of R_{IREF} is 40.2 kΩ with 0.1% tolerance and power rating of 100 mW. For improved noise immunity, place a 1000-pF ceramic capacitor from the IREF pin to GND. The IREF pins of all the eFuses in a parallel chain must be connected together.

Note

Maintain V_{IREF} within the recommended voltage to ensure proper operation of overcurrent detection circuit.

- **Selecting the R_{IMON} resistor to set the overcurrent (circuit-breaker) and fast-trip thresholds during steady-state**

  TPS25984x eFuse responds to the output overcurrent conditions during steady-state by turning off the output after a user-adjustable transient fault blanking interval. This eFuse continuously senses the total system current (I_{OUT}) and produces a proportional analog current output (I_{IMON}) on the IMON pin. This generates a voltage (V_{IMON}) across the IMON pin resistor (R_{IMON}) in response to the load current, which is defined as Equation 34.

$$V_{IMON} = I_{OUT} \times G_{IMON} \times R_{IMON} \tag{34}$$

  G_{IMON} is the current monitor gain (I_{IMON} : I_{OUT}), whose typical value is 18.13 µA/A. The overcurrent condition is detected by comparing the V_{IMON} against the V_{IREF} as a threshold. The circuit-breaker threshold during steady-state (I_{OCP}) can be calculated using Equation 35.

$$I_{OCP} = \frac{V_{IREF}}{G_{IMON} \times R_{IMON}} \tag{35}$$

  In this design example, I_{OCP} is considered to be around 1.1 times $I_{OUT(max)}$. Hence, I_{OCP} is set at 300 A, and R_{IMON} can be calculated to be 183.8 Ω with G_{IMON} as 18.13 µA/A and V_{IREF} as 1 V. The nearest value of R_{IMON} is 182 Ω with 0.1% tolerance and power rating of 100 mW. For noise reduction, place a 22-pF ceramic capacitor across the IMON pin and GND. The IMON pins of all the eFuses in a parallel chain must be connected together.

Copyright © 2025 Texas Instruments Incorporated

Note

A system output current (I_{OUT}) must be considered when selecting R_{IMON}, not the current carried by each device.

- **Selecting the R_{ILIM} resistor to set the current limit and fast-trip thresholds during start-up and the active sharing threshold during steady-state**

  R_{ILIM} is used in setting up the active current sharing threshold during steady-state and the overcurrent limit during startup among the devices in a parallel chain. Each device continuously monitors the current flowing through it (I_{DEVICE}) and outputs a proportional analog output current on its own ILIM pin. This in turn produces a proportional voltage (V_{ILIM}) across the respective ILIM pin resistor (R_{ILIM}), which is expressed as Equation 36.

$$V_{ILIM} = I_{DEVICE} \times G_{ILIM} \times R_{ILIM} \quad (36)$$

  G_{ILIM} is the current monitor gain (I_{ILIM} : I_{DEVICE}), whose typical value is 18.13 µA/A.

  – ***Active current sharing during steady-state***: This mechanism operates only after the device reaches steady-state and acts independently by comparing its own load current information (V_{ILIM}) with the Active Current Sharing reference ($CLREF_{LIN}$) threshold, defined as Equation 37.

$$CLREF_{LIN} = \frac{1.1 \times V_{IREF}}{3} \quad (37)$$

  Therefore, R_{LIM} must be calculated using Equation 38 to define the active current sharing threshold as I_{OCP}/N, where N is the number of devices in parallel. Using N = 5, R_{IMON} = 182 Ω, and Equation 38, R_{ILIM} can be calculated to be 333.3 Ω. The closest standard value of 332 Ω with 0.1% tolerance and power rating of 100 mW resistances are selected as R_{ILIM} for each device.

$$R_{ILIM} = \frac{1.1 \times N \times R_{IMON}}{3} \quad (38)$$

Note

To determine the value of R_{ILIM}, Equation 39 must be used if a different threshold for active current sharing ($I_{LIM(ACS)}$) than I_{OCP}/N is desired.

$$R_{ILIM} = \frac{1.1 \times V_{IREF}}{3 \times G_{ILIM} \times I_{LIM(ACS)}} \quad (39)$$

When computing the current limit threshold during start-up in the next sub-section, ensure to use this R_{ILIM} value.

  – ***Overcurrent limit during start-up***: During inrush, the overcurrent condition for each device is detected by comparing its own load current information (V_{ILIM}) with a scaled reference voltage as depicted in Equation 40.

$$CLREF_{SAT} = \frac{0.7 \times V_{IREF}}{3} \quad (40)$$

  The current limit threshold during start-up can be calculated using Equation 41.

$$I_{ILIM(Startup)} = \frac{CLREF_{SAT}}{G_{ILIM} \times R_{ILIM}} \quad (41)$$

  By using a R_{ILIM} value of 332 Ω for each device, the start-up current is limited to around 38 A for each device.

Copyright © 2025 Texas Instruments Incorporated

Note

The active current limit block employs a foldback mechanism during start-up based on V_{OUT}. When V_{OUT} is below the foldback threshold (V_{FB}) of 2 V, the current limit threshold is further lowered.

- **Selecting the C_{ITIMER} capacitor to set the overcurrent blanking timer**

  An appropriate capacitor can be connected at the ITIMER pin to ground to adjust the duration for which the load transients above the circuit-breaker threshold are allowed. The transient overcurrent blanking interval can be calculated using Equation 42.

$$t_{ITIMER}(ms) = \frac{C_{ITIMER}(nF) \times \Delta V_{ITIMER}(V)}{I_{ITIMER}(\mu A)} \quad (42)$$

  Where t_{ITIMER} is the transient overcurrent blanking timer and C_{ITIMER} is the capacitor connected between ITIMER pin of the primary device and GND. I_{ITIMER} = 2.05 µA and ΔV_{ITIMER} = 1.5 V. A 22-nF capacitor with 10% tolerance and DC voltage rating of 25 V is used as the C_{ITIMER} for the primary device in this design, which results in 16.5 ms of t_{ITIMER}. The ITIMER pin for all the secondary devices is left open.

- **Selecting the resistors to set the undervoltage lockout threshold**

  The undervoltage lockout (UVLO) threshold is adjusted by employing the external voltage divider network of R_1 and R_2 connected between IN, EN/UVLO, and GND pins of the device as described in Undervoltage protection section. The resistor values required for setting up the UVLO threshold are calculated using Equation 43.

$$V_{IN(UV)} = V_{UVLO(R)} \frac{R_1 + R_2}{R_2} \quad (43)$$

  To minimize the input current drawn from the power supply, TI recommends using higher resistance values for R_1 and R_2. The current drawn by R_1 and R_2 from the power supply is $I_{R12} = V_{IN} / (R_1 + R_2)$. However, the leakage currents due to external active components connected to the resistor string can add errors to these calculations. So, the resistor string current, I_{R12} must be 20 times greater than the leakage current at the EN/UVLO pin (I_{ENLKG}). From the device electrical specifications, I_{ENLKG} is 0.1 µA (maximum) and UVLO rising threshold $V_{UVLO(R)}$ = 1.2 V. From the design requirements, V_{INUVLO} = 10.8 V. First choose the value of R_1 = 1 MΩ and use Equation 13 to calculate R_2 = 125 kΩ. Use the closest standard 1 % resistor values: R_1 = 1 MΩ and R_2 = 124 kΩ. For noise reduction, place a 1000-pF ceramic capacitor across the EN/UVLO pin and GND.

- **Selecting the R-C filter between VIN and VDD**

  VDD pin is intended to power the internal control circuitry of the eFuse with a filtered and stable supply, not affected by system transients. Therefore, use an R (10 Ω) – C (2.2 µF) filter from the input supply (IN pin) to the VDD pin. This helps to filter out the supply noises and to hold up the controller supply during severe faults such as short-circuit at the output. In a parallel chain, this R-C filter must be employed for each device.

- **Selecting the pullup resistors and power supplies for SWEN, PG, and $\overline{FLT}$ pins**

  $\overline{FLT}$ and PG are the open drain outputs. If these logic signals are used, the corresponding pins must be pulled up to the appropriate voltages (< 5 V) through 10-kΩ pullup resistances.

CAUTION

SWEN pin must be pulled up to a voltage in the range of 2.5 V to 5 V through a 100-kΩ resistance. This pullup power supply must be generated from the input to the eFuse and available before the eFuse is enabled, without which the eFuse does not start up.

PG pin must be pulled up to a voltage in the range of 2.5 V to 5 V through a 100-kΩ resistance.

- **Selection of TVS diode at input and Schottky diode at output**

Copyright © 2025 Texas Instruments Incorporated

In the case of a short circuit and overload current limit when the device interrupts a large amount of current instantaneously, the input inductance generates a positive voltage spike on the input, whereas the output inductance creates a negative voltage spike on the output. The peak amplitudes of these voltage spikes (transients) are dependent on the value of inductance in series with the input or output of the device. Such transients can exceed the absolute maximum ratings of the device and eventually lead to failures due to electrical overstress (EOS) if appropriate steps are not taken to address this issue. Typical methods for addressing this issue include:

1. Minimize lead length and inductance into and out of the device.
2. Use a large PCB GND plane.
3. Addition of the Transient Voltage Suppressor (TVS) diodes to clamp the positive transient spike at the input.
4. Using Schottky diodes across the output to absorb negative spikes.

Refer to *TVS Clamping in Hot-Swap Circuits* and *Selecting TVS Diodes in Hot-Swap and ORing Applications* for details on selecting an appropriate TVS diode and the number of TVS diodes to be in parallel to effectively clamp the positive transients at the input below the absolute maximum ratings of the IN pin (20 V). These TVS diodes also help to limit the transient voltage at the IN pin during the Hot Plug event. Four (4) SMDJ12A are used in parallel in this design example.

Note

Maximum Clamping Voltage V_C specification of the selected TVS diode at I_{pp} (10/1000 µs) (V) must be lower than the absolute maximum rating of the power input (IN) pin for safe operation of the eFuse.

Selection of the Schottky diodes must be based on the following criteria:

– The non-repetitive peak forward surge current (I_{FSM}) of the selected diode must be more than the fast-trip threshold (2 × $I_{OCP(TOTAL)}$). Two or more Schottky diodes in parallel must be used if a single Schottky diode is unable to meet the required I_{FSM} rating. Equation 44 calculates the number of Schottky diodes ($N_{Schottky}$) that must be in parallel.

$$N_{Schottky} > \frac{2 \times I_{OCP(TOTAL)}}{I_{FSM}} \quad (44)$$

– Forward Voltage Drop (V_F) at near to I_{FSM} must be as small as possible. Ideally, the negative transient voltage at the OUT pin must be clamped within the absolute maximum rating of the OUT pin (–1 V).
– DC Blocking Voltage (V_{RM}) must be more than the maximum input operating voltage.
– Leakage current (I_R) must be as small as possible.

Three (3) SBR10U45SP5 are used in parallel in this design example.

- **Selecting C_{IN} and C_{OUT}**

TI recommends to add ceramic bypass capacitors to help stabilize the voltages on the input and output. The value of C_{IN} must be kept small to minimize the current spike during hot-plug events. For each device, 0.1 µF of C_{IN} is a reasonable target. Because C_{OUT} does not get charged during hot-plug, a larger value such as 2.2 µF can be used at the OUT pin of each device.

Copyright © 2025 Texas Instruments Incorporated

8.2.4 Application Curves

All the waveforms below are captured on an evaluation setup with six (6) TPS25984 eFuses in parallel. All the pullup supplies are derived from a separate standby rail.

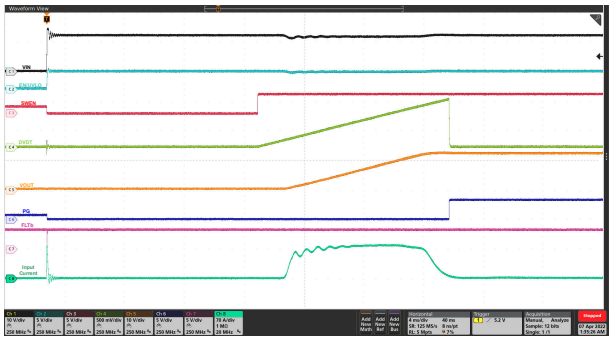

Figure 8-6. Input Hot Plug: V_{IN} Stepped Up from 0 V to 12 V, C_{LOAD} = 50 mF, C_{DVDT} = 33 nF, and R_{ILIM} on Each Device = 442 Ω

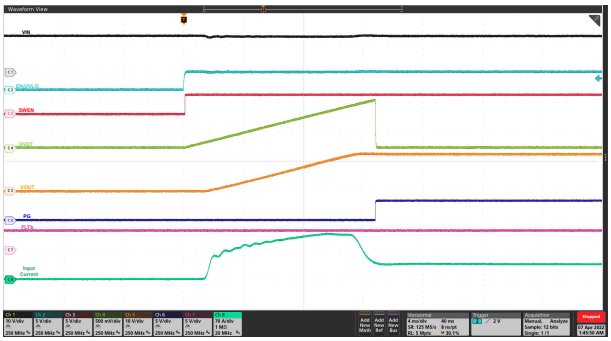

Figure 8-7. Start-up with EN/UVLO: V_{IN} = 12 V, EN/UVLO Stepped Up From 0 V to 3 V, C_{LOAD} = 50 mF, $R_{LOAD(Start-up)}$ = 0.48 Ω, C_{DVDT} = 33 nF, and R_{ILIM} on Each Device = 442 Ω



Figure 8-8. Power Up into Short: V_{IN} = 12 V, EN/UVLO Stepped Up From 0 V to 3 V, R_{IREF} = 40.2 kΩ, R_{ILIM} on Each Device = 442 Ω, and OUT Shorted to GND

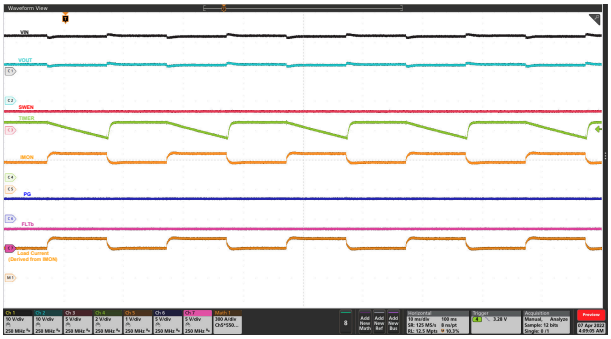

Figure 8-9. Transient Overload: V_{IN} = 12 V, C_{ITIMER} = 22 nF, C_{LOAD} = 50 mF, R_{IMON} = 200 Ω, R_{IREF} = 40.2 kΩ, and Load Current Stepped from 250 A to 300 A then 250 A within 10 ms



Figure 8-10. Circuit-Breaker Response: V_{IN} = 12 V, C_{ITIMER} = 22 nF, C_{LOAD} = 50 mF, R_{IMON} = 200 Ω, R_{IREF} = 40.2 kΩ, and Load Current Stepped up From 250 A to 400 A for > 20 ms

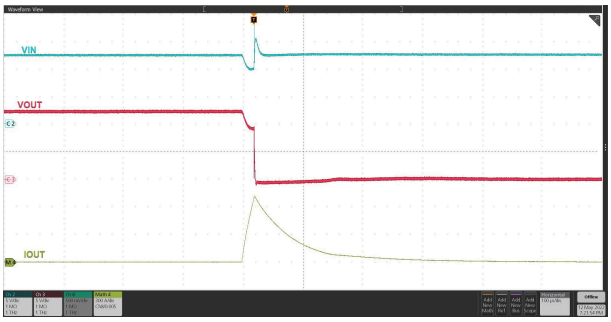

Figure 8-11. Output Hot-Short Response: V_{IN} = 12 V, R_{IMON} = 200 Ω, R_{IREF} = 40.2 kΩ, and OUT Shorted to GND

Copyright © 2025 Texas Instruments Incorporated



Figure 8-12. Two Devices in Parallel Temperature Rise with 110-A DC Current at Room Temperature (No Air-Flow)

8.3 Best Design Practices

TPS25984x needs the SWEN pin to be pulled up to a supply rail which is powered up before the device is enabled. Failing this, the device is not able to turn on the output. The SWEN pullup supply must not be derived from the output of the eFuse. Use one of the following options to derive the pullup supply rail for SWEN.

1. Use an existing standby rail in the system, which is derived from the main power input and comes up before the eFuse is turned on.
2. Use an LDO (3.3 V or 5 V) powered from the main power input.

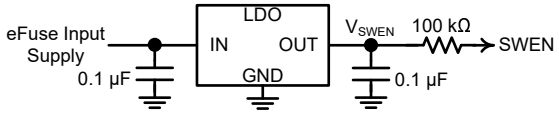

Figure 8-13. LDO Used as Pullup Supply for SWEN

3. Use a Zener regular powered from the main power input.

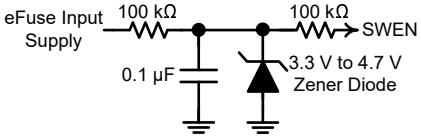

Figure 8-14. Zener Regulator Used as Pullup Supply for SWEN

4. Use the ITIMER pin of the primary eFuse. Ensure the ITIMER pin does not have excess loading which can interfere with the normal overcurrent blanking timer functionality.

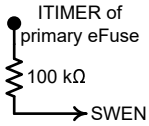

Figure 8-15. ITIMER Pin Used as Pullup Supply for SWEN

The PG is an open-drain pin and must be pulled up to an external supply. Do not leave the PG pin floating or force the pin low externally during steady-state as it can interfere with the device operation.

8.4 Power Supply Recommendations

The TPS25984x devices are designed for a supply voltage in the range of 4.5 V to 16 V on the IN and VDD pins. TI recommends using a minimum capacitance of 0.1 µF on the IN pin of each device in parallel chain to avoid coupling of high slew rates during hot plug events. TI also recommends using an R-C filter from the input supply to the VDD pin on each device in parallel chain to filter out supply noise and to hold up the controller supply during severe faults such as short-circuit.

Copyright © 2025 Texas Instruments Incorporated

8.4.1 Transient Protection

In the case of a short-circuit or circuit-breaker event when the device interrupts current flow, the input inductance generates a positive voltage spike on the input, and the output inductance generates a negative voltage spike on the output. The peak amplitude of voltage spikes (transients) is dependent on the value of inductance in series to the input or output of the device. Such transients can exceed the absolute maximum ratings of the device if steps are not taken to address the issue. Typical methods for addressing transients include:

- Minimize lead length and inductance into and out of the device.
- Use a large PCB GND plane.
- Connect a Schottky diode from the OUT pin ground to absorb negative spikes.
- Connect a low ESR capacitor of 2.2 µF or higher at the OUT pin very close to the device.
- Connect a ceramic capacitor C_{IN} = 0.1 µF or higher at the IN pin very close to the device to dampen the rise time of input transients. The capacitor voltage rating must be at least twice the input supply voltage to be able to withstand the positive voltage excursion during inductive ringing.

The approximate value of input capacitance can be estimated with Equation 45.

$$V_{SPIKE(Absolute)} = V_{IN} + I_{LOAD} \times \sqrt{\frac{L_{IN}}{C_{IN}}} \quad (45)$$

where

V_{IN} is the nominal supply voltage.

I_{LOAD} is the load current.

L_{IN} equals the effective inductance seen looking into the source.

C_{IN} is the capacitance present at the input.

- Some applications can require the addition of a Transient Voltage Suppressor (TVS) to prevent transients from exceeding the absolute maximum ratings of the device. In some cases, even if the maximum amplitude of the transients is below the absolute maximum rating of the device, a TVS can help to absorb the excessive energy dump and prevent it from creating very fast transient voltages on the input supply pin of the IC, which can couple to the internal control circuits and cause unexpected behavior.

The circuit implementation with optional protection components is shown in Figure 8-16.

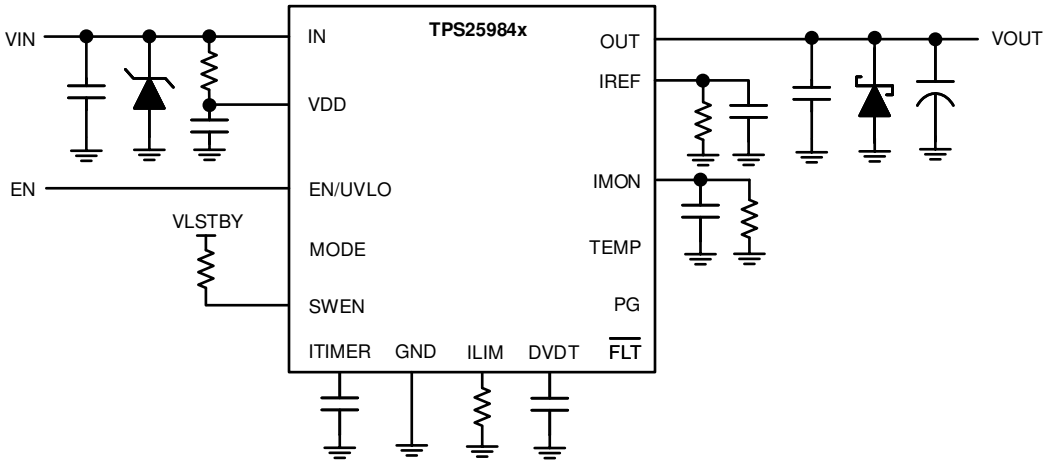

Figure 8-16. Circuit Implementation with Optional Protection Components

8.4.2 Output short-Circuit Measurements

It is difficult to obtain repeatable and similar short-circuit testing results. The following contribute to variation in results:

- Source bypassing
- Input leads
- Circuit layout
- Component selection
- Output shorting method
- Relative location of the short
- Instrumentation

The actual short exhibits a certain degree of randomness because it microscopically bounces and arcs. Ensure that configuration and methods are used to obtain realistic results. Do not expect to see waveforms exactly like those in this data sheet because every setup is different.

8.5 Layout

8.5.1 Layout Guidelines

- For all applications, TI recommends a ceramic decoupling capacitor of 0.1 µF or greater between the IN terminal and GND terminal.
- For all applications, TI recommends a ceramic decoupling capacitor of 2.2 µF or greater between the OUT terminal and GND terminal.
- The optimal placement of the decoupling capacitor is closest to the IN and GND terminals of the device. Care must be taken to minimize the loop area formed by the bypass-capacitor connection, the IN terminal, and the GND terminal of the IC. See Figure below for a PCB layout example.
- High current-carrying power-path connections must be as short as possible and must be sized to carry at least twice the full-load current.
- The GND terminal must be tied to the PCB ground plane at the terminal of the IC. The PCB ground must be a copper plane or island on the board.
- The IN and OUT pins are used for Heat Dissipation. Connect to as much copper area as possible with thermal vias.
- Locate the following support components close to their connection pins:
  - R_{ILIM}
  - R_{IMON}
  - R_{IREF}
  - C_{dVdT}
  - C_{ITIMER}
  - C_{IN}
  - C_{OUT}
  - C_{VDD}
  - Resistors for the EN/UVLO pin
- Connect the other end of the component to the GND pin of the device with shortest trace length. The trace routing for the C_{IN}, C_{OUT}, C_{VDD}, R_{IREF}, R_{ILIM}, R_{IMON}, C_{ITIMER} and C_{dVdt} components to the device must be as short as possible to reduce parasitic effects on the current limit, overcurrent blanking interval and soft-start timing. These traces must not have any coupling to switching signals on the board.
- Because the IMON, ILIM and IREF pins directly control the overcurrent protection behavior of the device, the PCB routing of these nodes must be kept away from any noisy (switching) signals.
- TI recommends to keep the parasitic loading on SWEN pin to a minimum to avoid synchronization issues.
- Protection devices such as TVS, snubbers, capacitors, or diodes must be placed physically close to the device they are intended to protect. These protection devices must be routed with short traces to reduce inductance. For example, TI recommends a protection Schottky diode to address negative transients due to switching of inductive loads, and it must be physically close to the OUT pins.

Copyright © 2025 Texas Instruments Incorporated

8.5.2 Layout Example

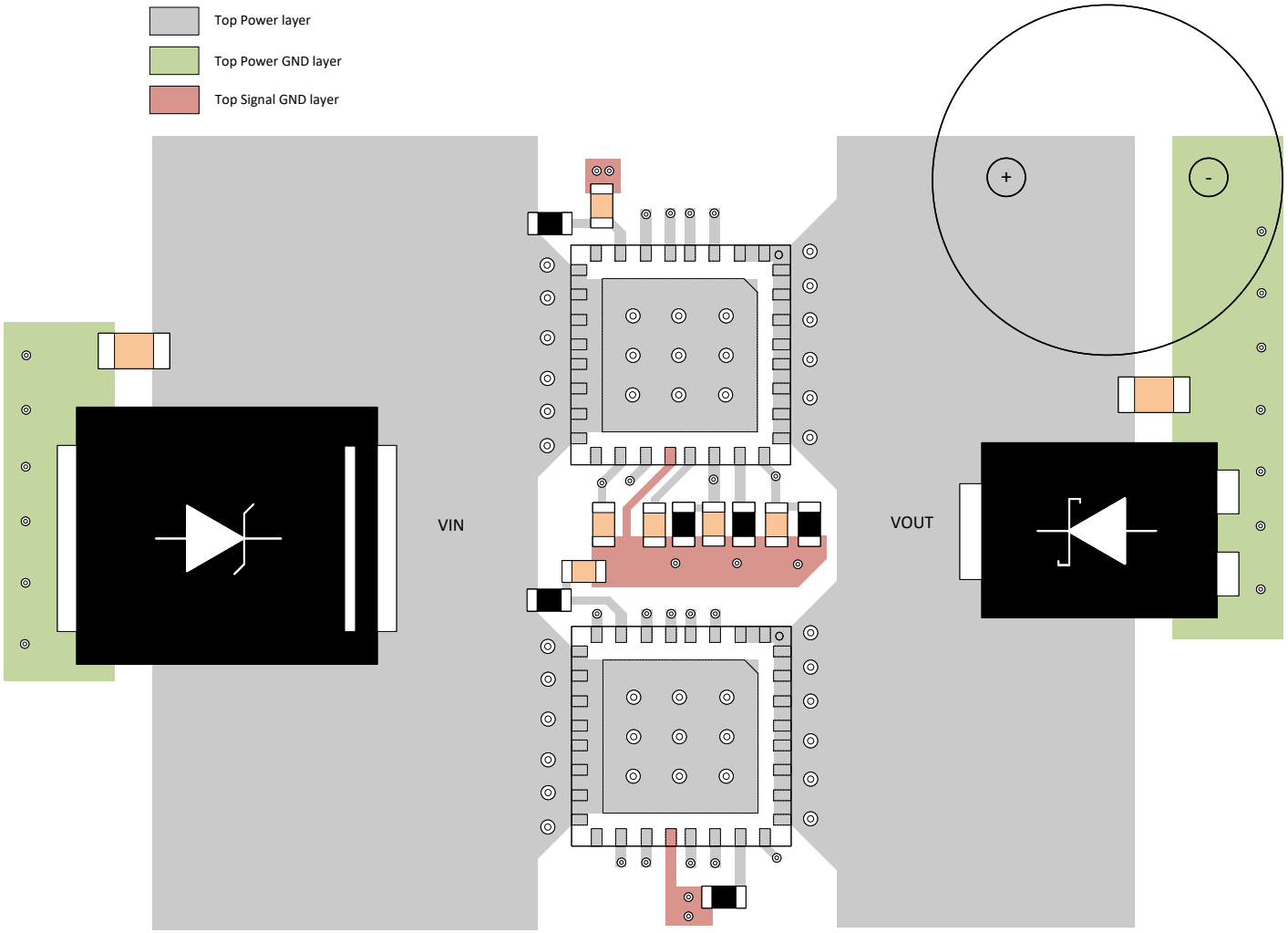

Figure 8-17. TPS25984x Two Parallel Devices Layout Example

9 Device and Documentation Support

TI offers an extensive line of development tools. Tools and software to evaluate the performance of the device, generate code, and develop solutions are listed below.

9.1 Documentation Support

9.1.1 Related Documentation

For related documentation see the following:

- Contact Texas Instruments, *TPS25984EVM eFuse Evaluation Board User Guide*
- Contact Texas Instruments, *TPS25984x Design Calculator*

9.2 Support Resources

TI E2E™ support forums are an engineer's go-to source for fast, verified answers and design help — straight from the experts. Search existing answers or ask your own question to get the quick design help you need.

Linked content is provided "AS IS" by the respective contributors. They do not constitute TI specifications and do not necessarily reflect TI's views; see TI's Terms of Use.

9.3 Trademarks

PROCHOT™ and Intel PSYS™ are trademarks of Intel.
TI E2E™ is a trademark of Texas Instruments.
Intel® is a registered trademark of Intel.
is a registered trademark of intel.
PMBus® is a registered trademark of SMIF.
All trademarks are the property of their respective owners.

9.4 Electrostatic Discharge Caution



This integrated circuit can be damaged by ESD. Texas Instruments recommends that all integrated circuits be handled with appropriate precautions. Failure to observe proper handling and installation procedures can cause damage.

ESD damage can range from subtle performance degradation to complete device failure. Precision integrated circuits may be more susceptible to damage because very small parametric changes could cause the device not to meet its published specifications.

9.5 Glossary

TI Glossary — This glossary lists and explains terms, acronyms, and definitions.

10 Revision History

NOTE: Page numbers for previous revisions may differ from page numbers in the current version.

Changes from Revision A (October 2023) to Revision B (April 2025)	Page
• R_{ON} (room temp) From: 0.87mΩ (MAX) To: 1.13mΩ (MAX) in the *Electrical Characteristics* table	6
• R_{ON} (across temp) From: 1.16mΩ (MAX) To: 1.5mΩ (MAX) in the *Electrical Characteristics* table	6
• $R_{ON(ACS)}$ From: 1.12mΩ (MAX) To: 1.8mΩ (MAX) in the *Electrical Characteristics* table	6
• $R_{ON(GHI)}$ From: 1.4mΩ (MAX) To: 1.8mΩ (MAX) in the *Electrical Characteristics* table	6

Changes from Revision * (July 2023) to Revision A (October 2023)	Page
• First public release of the data sheet	1

Copyright © 2025 Texas Instruments Incorporated

11 Mechanical, Packaging, and Orderable Information

The following pages include mechanical, packaging, and orderable information. This information is the most current data available for the designated devices. This data is subject to change without notice and revision of this document. For browser-based versions of this data sheet, refer to the left-hand navigation.

Copyright © 2025 Texas Instruments Incorporated

PACKAGING INFORMATION

Orderable part number	Status (1)	Material type (2)	Package | Pins	Package qty | Carrier	RoHS (3)	Lead finish/ Ball material (4)	MSL rating/ Peak reflow (5)	Op temp (°C)	Part marking (6)
TPS259840RZJR	Active	Production	WQFN-FCRLF (RZJ) | 32	3000 | LARGE T&R	Yes	NIPDAU	Level-2-260C-1 YEAR	-40 to 125	TPS 259840
TPS259840RZJR.A	Active	Production	WQFN-FCRLF (RZJ) | 32	3000 | LARGE T&R	Yes	NIPDAU	Level-2-260C-1 YEAR	-40 to 125	TPS 259840
TPS259841RZJR	Active	Production	WQFN-FCRLF (RZJ) | 32	3000 | LARGE T&R	Yes	NIPDAU	Level-2-260C-1 YEAR	-40 to 125	TPS 259841
TPS259841RZJR.A	Active	Production	WQFN-FCRLF (RZJ) | 32	3000 | LARGE T&R	Yes	NIPDAU	Level-2-260C-1 YEAR	-40 to 125	TPS 259841

(1) **Status:** For more details on status, see our product life cycle.

(2) **Material type:** When designated, preproduction parts are prototypes/experimental devices, and are not yet approved or released for full production. Testing and final process, including without limitation quality assurance, reliability performance testing, and/or process qualification, may not yet be complete, and this item is subject to further changes or possible discontinuation. If available for ordering, purchases will be subject to an additional waiver at checkout, and are intended for early internal evaluation purposes only. These items are sold without warranties of any kind.

(3) **RoHS values:** Yes, No, RoHS Exempt. See the TI RoHS Statement for additional information and value definition.

(4) **Lead finish/Ball material:** Parts may have multiple material finish options. Finish options are separated by a vertical ruled line. Lead finish/Ball material values may wrap to two lines if the finish value exceeds the maximum column width.

(5) **MSL rating/Peak reflow:** The moisture sensitivity level ratings and peak solder (reflow) temperatures. In the event that a part has multiple moisture sensitivity ratings, only the lowest level per JEDEC standards is shown. Refer to the shipping label for the actual reflow temperature that will be used to mount the part to the printed circuit board.

(6) **Part marking:** There may be an additional marking, which relates to the logo, the lot trace code information, or the environmental category of the part.

Multiple part markings will be inside parentheses. Only one part marking contained in parentheses and separated by a "~" will appear on a part. If a line is indented then it is a continuation of the previous line and the two combined represent the entire part marking for that device.

Important Information and Disclaimer: The information provided on this page represents TI's knowledge and belief as of the date that it is provided. TI bases its knowledge and belief on information provided by third parties, and makes no representation or warranty as to the accuracy of such information. Efforts are underway to better integrate information from third parties. TI has taken and continues to take reasonable steps to provide representative and accurate information but may not have conducted destructive testing or chemical analysis on incoming materials and chemicals. TI and TI suppliers consider certain information to be proprietary, and thus CAS numbers and other limited information may not be available for release.

In no event shall TI's liability arising out of such information exceed the total purchase price of the TI part(s) at issue in this document sold by TI to Customer on an annual basis.

TAPE AND REEL INFORMATION

REEL DIMENSIONS

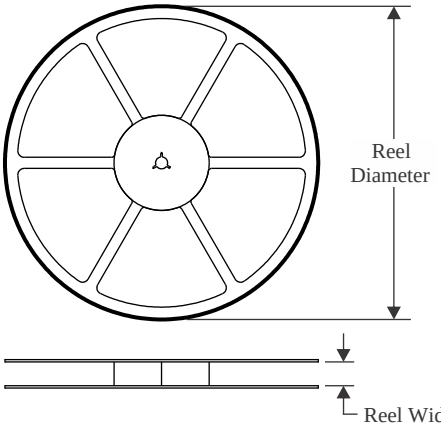

TAPE DIMENSIONS

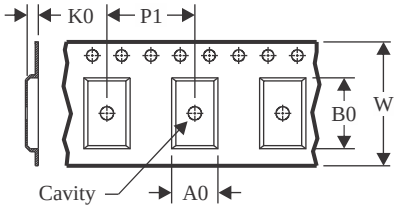

A0	Dimension designed to accommodate the component width
B0	Dimension designed to accommodate the component length
K0	Dimension designed to accommodate the component thickness
W	Overall width of the carrier tape
P1	Pitch between successive cavity centers

QUADRANT ASSIGNMENTS FOR PIN 1 ORIENTATION IN TAPE

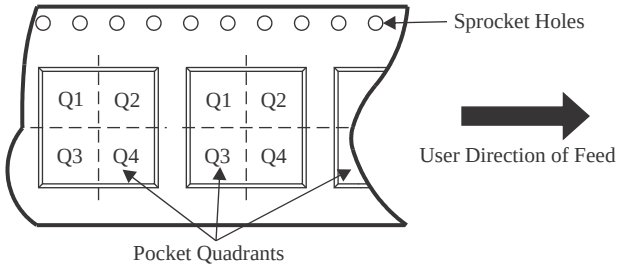

*All dimensions are nominal

Device	Package Type	Package Drawing	Pins	SPQ	Reel Diameter (mm)	Reel Width W1 (mm)	A0 (mm)	B0 (mm)	K0 (mm)	P1 (mm)	W (mm)	Pin1 Quadrant
TPS259840RZJR	WQFN-FCRLF	RZJ	32	3000	330.0	12.4	5.3	5.3	1.1	8.0	12.0	Q2
TPS259841RZJR	WQFN-FCRLF	RZJ	32	3000	330.0	12.4	5.3	5.3	1.1	8.0	12.0	Q2

TAPE AND REEL BOX DIMENSIONS

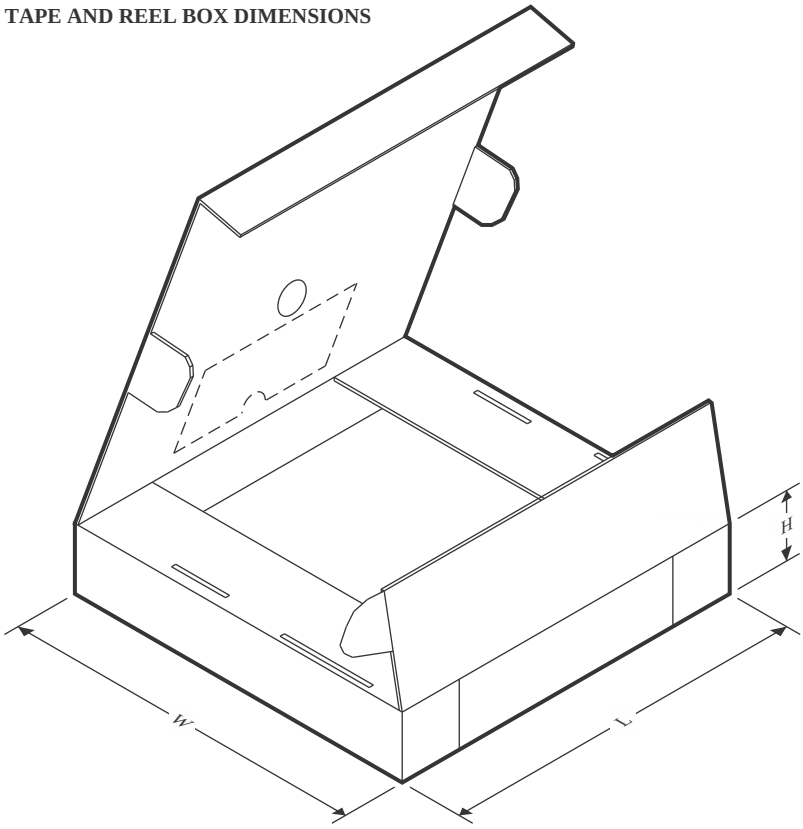

*All dimensions are nominal

Device	Package Type	Package Drawing	Pins	SPQ	Length (mm)	Width (mm)	Height (mm)
TPS259840RZJR	WQFN-FCRLF	RZJ	32	3000	346.0	346.0	33.0
TPS259841RZJR	WQFN-FCRLF	RZJ	32	3000	367.0	367.0	35.0

PACKAGE OUTLINE

RZJ0032A

WQFN-FCRLF - 0.7 mm max height

PLASTIC QUAD FLATPACK - NO LEAD

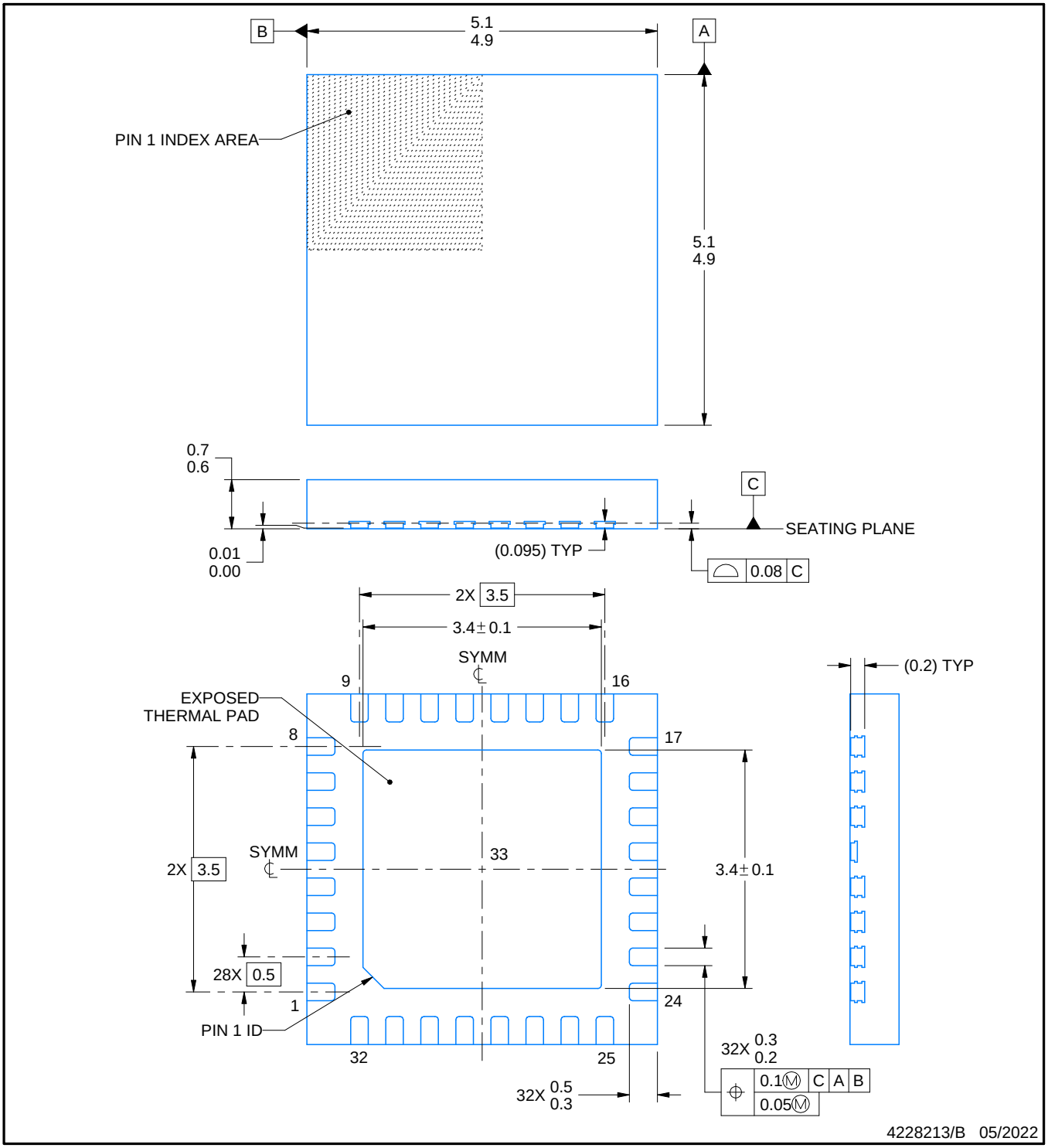

NOTES:

1. All linear dimensions are in millimeters. Any dimensions in parenthesis are for reference only. Dimensioning and tolerancing per ASME Y14.5M.
2. This drawing is subject to change without notice.
3. The package thermal pad must be soldered to the printed circuit board for thermal and mechanical performance.

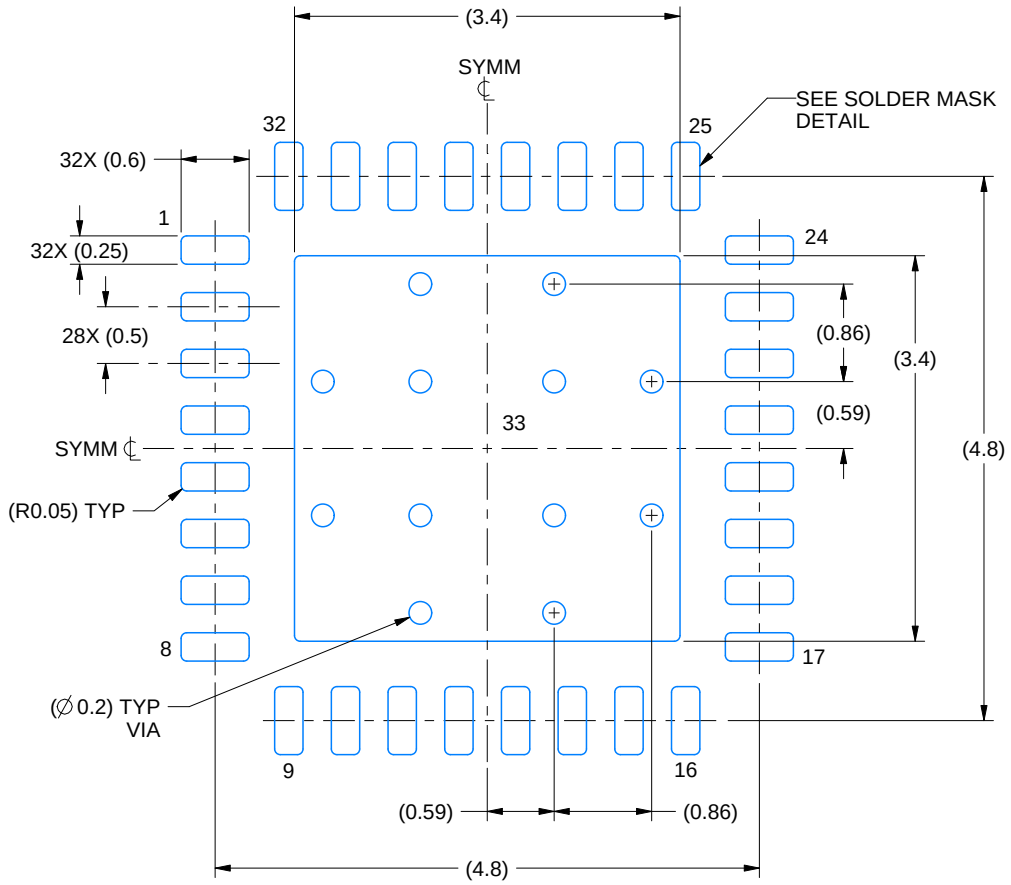

LAND PATTERN EXAMPLE
EXPOSED METAL SHOWN
SCALE: 15X

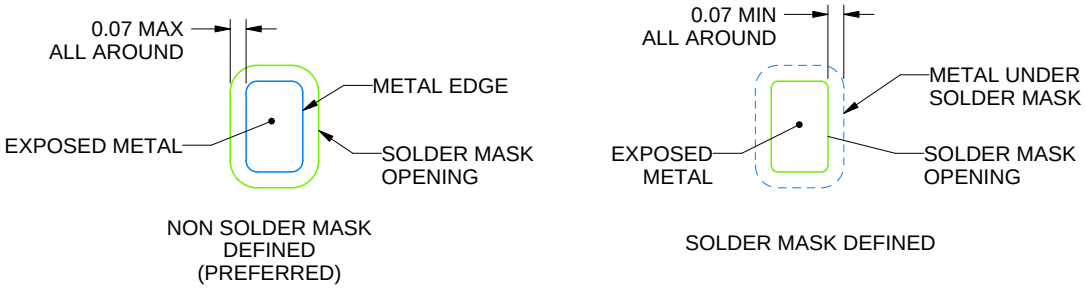

SOLDER MASK DETAILS

4228213/B 05/2022

NOTES: (continued)

4. This package is designed to be soldered to a thermal pad on the board. For more information, see Texas Instruments literature number SLUA271 (www.ti.com/lit/slua271).
5. Vias are optional depending on application, refer to device data sheet. If any vias are implemented, refer to their locations shown on this view. It is recommended that vias under paste be filled, plugged or tented.

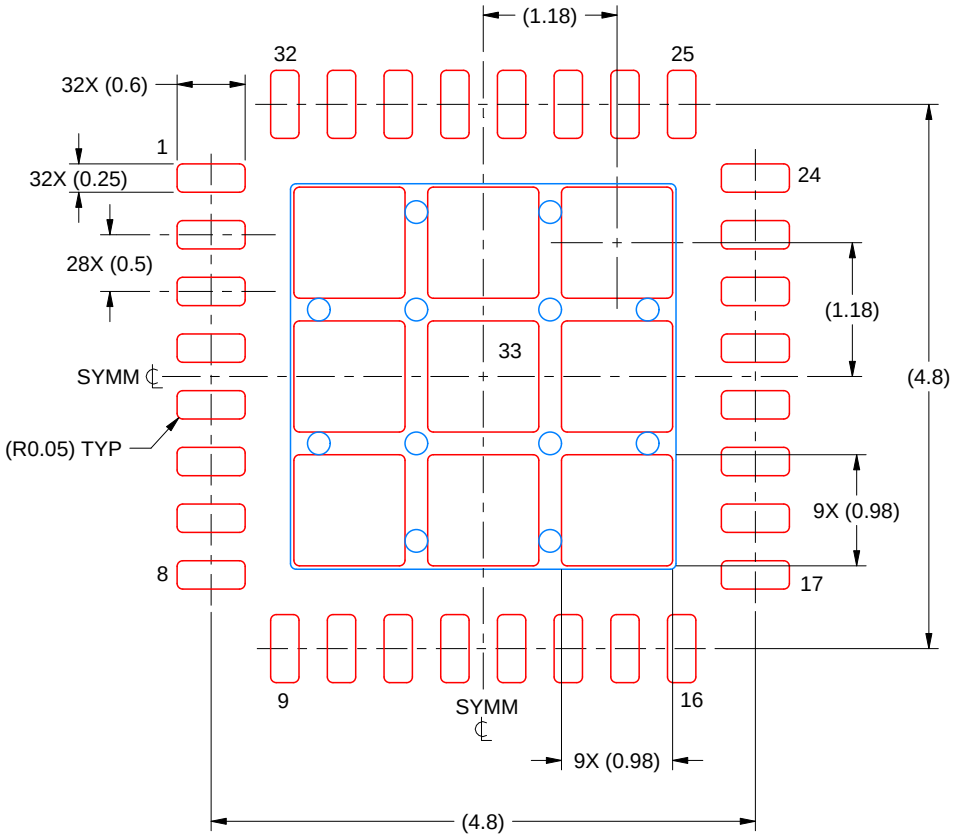

SOLDER PASTE EXAMPLE
BASED ON 0.125 MM THICK STENCIL
SCALE: 15X

EXPOSED PAD 33
75% PRINTED SOLDER COVERAGE BY AREA UNDER PACKAGE

4228213/B 05/2022

NOTES: (continued)

6. Laser cutting apertures with trapezoidal walls and rounded corners may offer better paste release. IPC-7525 may have alternate design recommendations.

PACKAGE OUTLINE

RZJ0032A

WQFN-FCRLF - 0.7 mm max height

PLASTIC QUAD FLATPACK - NO LEAD

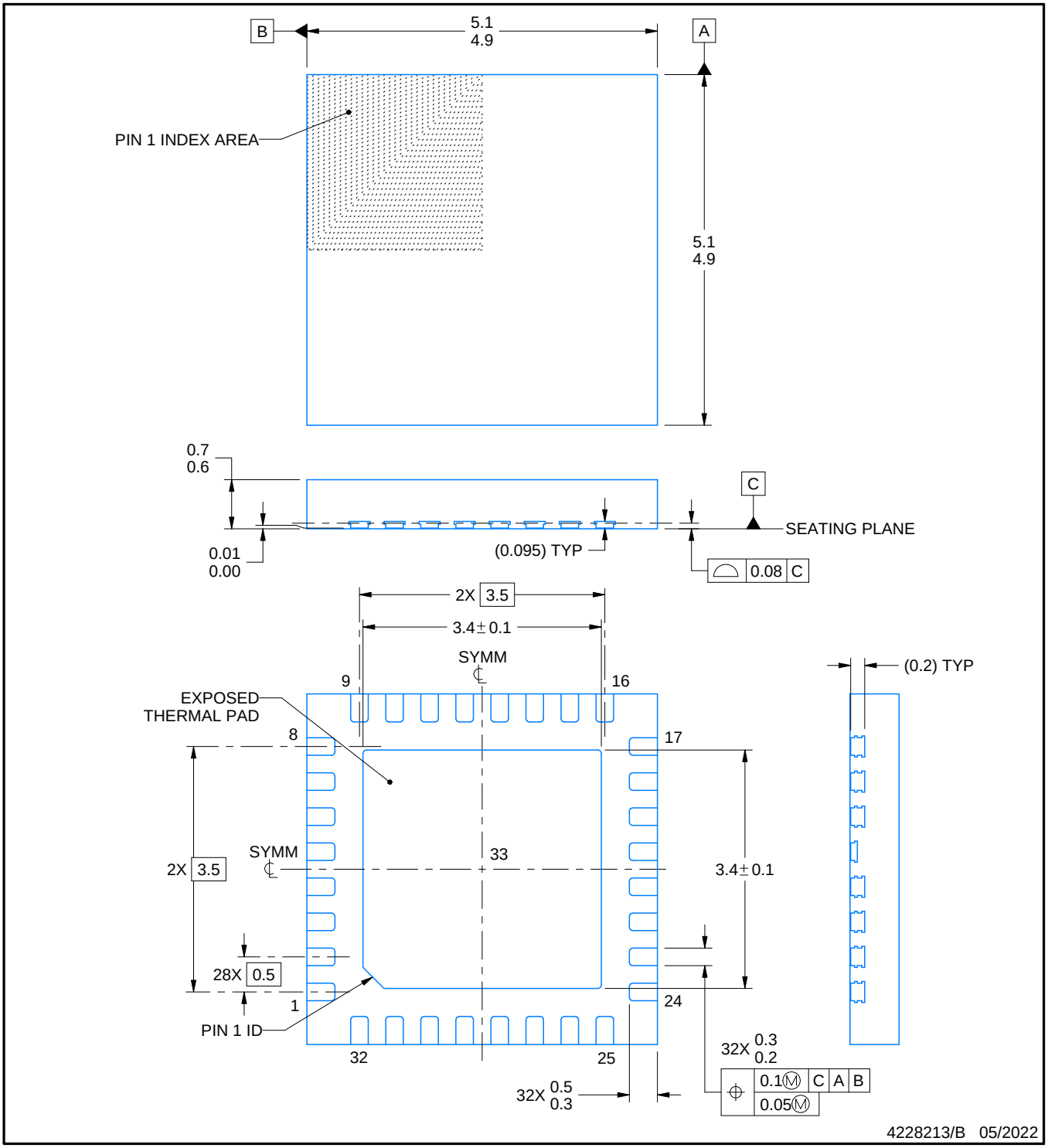

NOTES:

1. All linear dimensions are in millimeters. Any dimensions in parenthesis are for reference only. Dimensioning and tolerancing per ASME Y14.5M.
2. This drawing is subject to change without notice.
3. The package thermal pad must be soldered to the printed circuit board for thermal and mechanical performance.

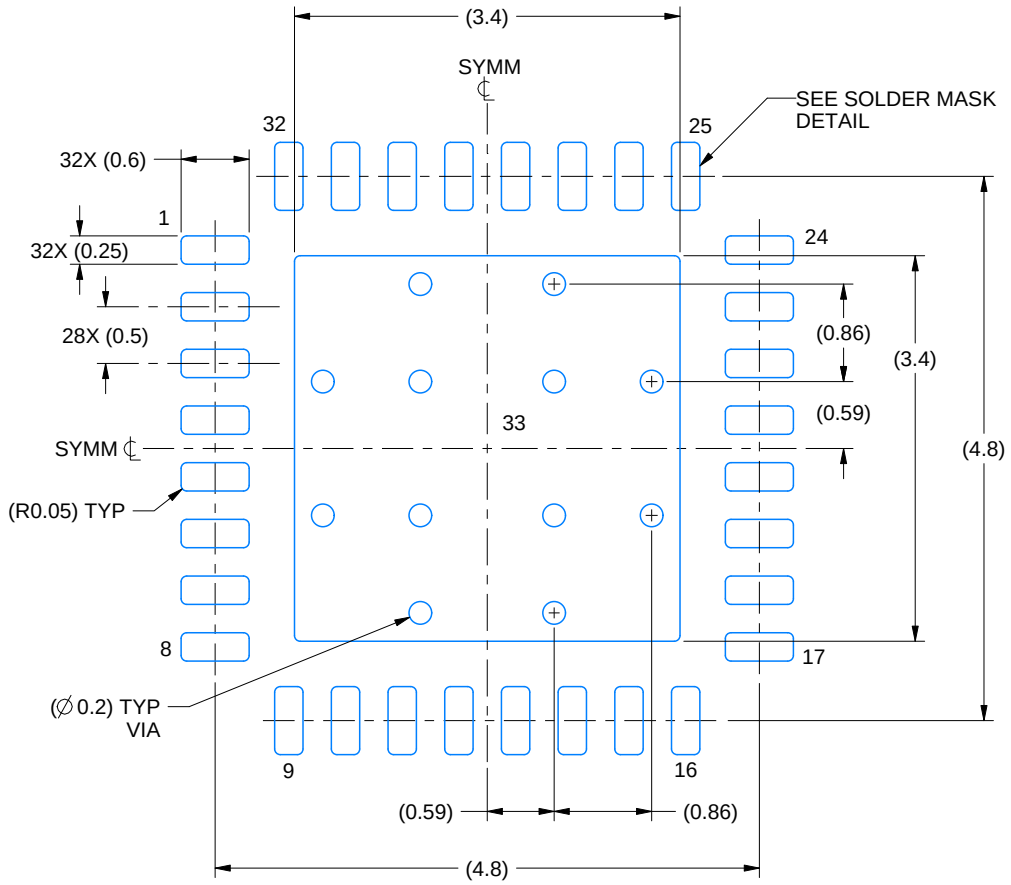

LAND PATTERN EXAMPLE
EXPOSED METAL SHOWN
SCALE: 15X

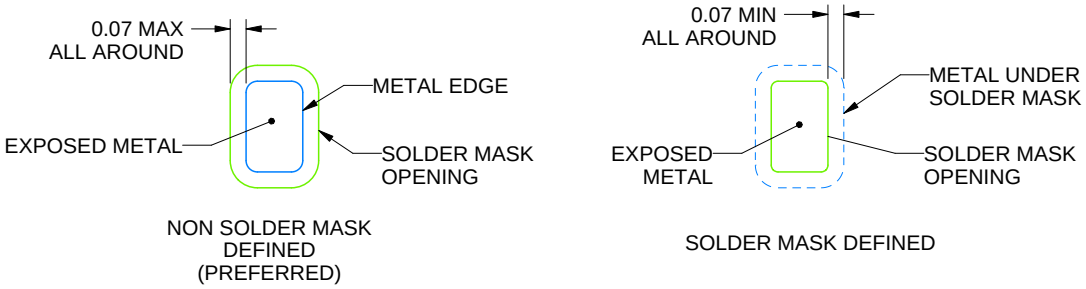

SOLDER MASK DETAILS

4228213/B 05/2022

NOTES: (continued)

4. This package is designed to be soldered to a thermal pad on the board. For more information, see Texas Instruments literature number SLUA271 (www.ti.com/lit/slua271).
5. Vias are optional depending on application, refer to device data sheet. If any vias are implemented, refer to their locations shown on this view. It is recommended that vias under paste be filled, plugged or tented.

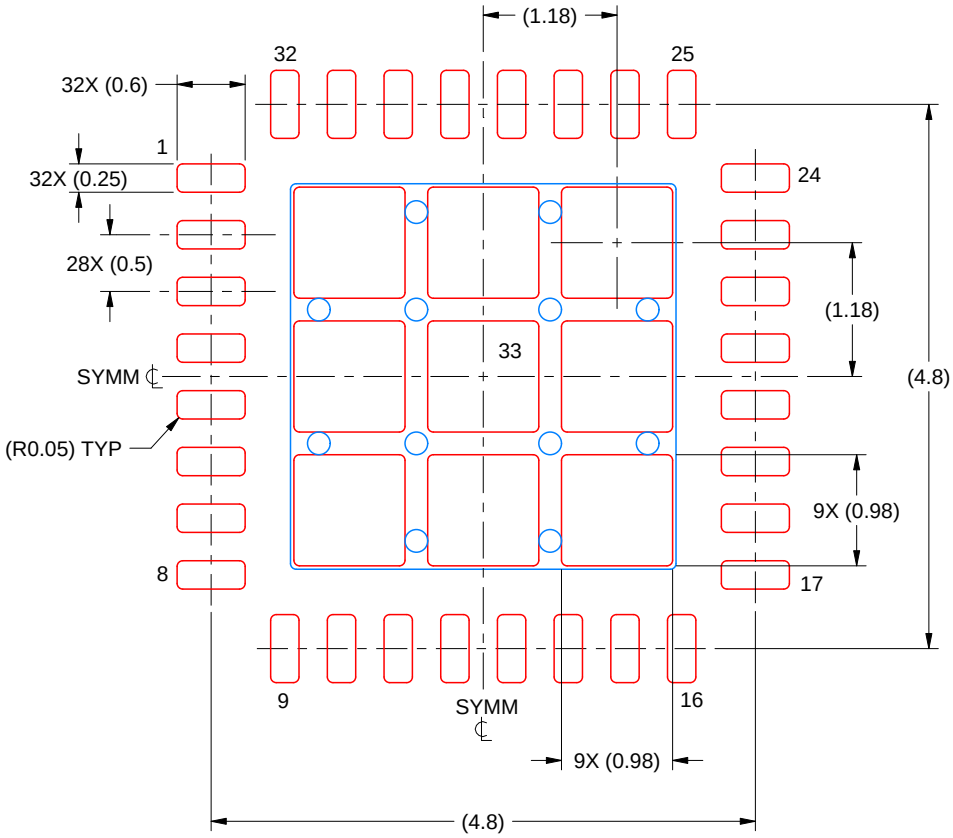

SOLDER PASTE EXAMPLE
BASED ON 0.125 MM THICK STENCIL
SCALE: 15X

EXPOSED PAD 33
75% PRINTED SOLDER COVERAGE BY AREA UNDER PACKAGE

4228213/B 05/2022

NOTES: (continued)

6. Laser cutting apertures with trapezoidal walls and rounded corners may offer better paste release. IPC-7525 may have alternate design recommendations.

IMPORTANT NOTICE AND DISCLAIMER

TI PROVIDES TECHNICAL AND RELIABILITY DATA (INCLUDING DATASHEETS), DESIGN RESOURCES (INCLUDING REFERENCE DESIGNS), APPLICATION OR OTHER DESIGN ADVICE, WEB TOOLS, SAFETY INFORMATION, AND OTHER RESOURCES “AS IS” AND WITH ALL FAULTS, AND DISCLAIMS ALL WARRANTIES, EXPRESS AND IMPLIED, INCLUDING WITHOUT LIMITATION ANY IMPLIED WARRANTIES OF MERCHANTABILITY, FITNESS FOR A PARTICULAR PURPOSE OR NON-INFRINGEMENT OF THIRD PARTY INTELLECTUAL PROPERTY RIGHTS.

These resources are intended for skilled developers designing with TI products. You are solely responsible for (1) selecting the appropriate TI products for your application, (2) designing, validating and testing your application, and (3) ensuring your application meets applicable standards, and any other safety, security, regulatory or other requirements.

These resources are subject to change without notice. TI grants you permission to use these resources only for development of an application that uses the TI products described in the resource. Other reproduction and display of these resources is prohibited. No license is granted to any other TI intellectual property right or to any third party intellectual property right. TI disclaims responsibility for, and you fully indemnify TI and its representatives against any claims, damages, costs, losses, and liabilities arising out of your use of these resources.

TI’s products are provided subject to TI’s Terms of Sale, TI’s General Quality Guidelines, or other applicable terms available either on ti.com or provided in conjunction with such TI products. TI’s provision of these resources does not expand or otherwise alter TI’s applicable warranties or warranty disclaimers for TI products. Unless TI explicitly designates a product as custom or customer-specified, TI products are standard, catalog, general purpose devices.

TI objects to and rejects any additional or different terms you may propose.

Copyright © 2025, Texas Instruments Incorporated

Last updated 10/2025

ENTEGRECİ

Bu belge www.entegreci.com üzerinden sunulmaktadır.

Elektronik komponent tedarikinde Entegreci

Entegreci, Eskişehir merkezli, Türkiye geneline satış yapan bir elektronik komponent mağazasıdır. Entegreler (IC), mikrodenetleyiciler, transistörler, diyotlar, pasif elemanlar, konnektörler, modüller ve geliştirme kartları tek adetten seri üretim adetlerine kadar satılır. Ürün sayfalarında güncel stok durumunu, fiyatı ve datasheet bağlantısını bulabilirsiniz.

Parça koduyla arama

Üretici parça numarasını yazın; stok ve fiyatı hemen görün.

www.entegreci.com

Ürün kategorileri

Entegreden kapasitöre tüm elektronik komponent kategorileri.

Kategorilere göz atın

Üreticiler

Aradığınız üreticinin ürünlerini tek sayfada inceleyin.

Üreticileri görün

Toplu alım ve teklif

Listede olmayan ya da yüksek adetli parçalar için teklif isteyin.

Teklif isteyin

www.entegreci.com | **destek@entegreci.com** | **0850 305 90 34**

Entegreci is an online electronic components store based in Türkiye. Search by manufacturer part number to see stock, prices and datasheets for integrated circuits, microcontrollers, transistors, passive components and connectors, or request a quote for parts that are not listed.

Bu sayfa Entegreci tarafından eklenmiştir. Belgenin önceki sayfaları asıl yayıncısına aittir ve içeriği değiştirilmemiştir; en güncel sürüm için belgenin yayıncısına başvurun.