- **Automatic Input Voltage Source Selection**
- **Glitch-Free Regulated Output**
- **5-V Input Voltage Source Detector With Hysteresis**
- **400-mA Load Current Capability With 5-V or 3.3-V Input Source**
- **Low $r_{DS(on)}$ Auxiliary Switch**
- **Thermally Enhanced Packaging Concept for Efficient Heat Management**

D PACKAGE
(TOP VIEW)

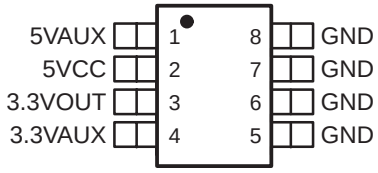

description

The TPPM0301 is a low-dropout regulator with auxiliary power management that provides a constant 3.3-V supply at the output capable of driving a 400-mA load.

The TPPM0301 provides a regulated power output for systems that have multiple input sources and require a constant voltage source with a low-dropout voltage. This is a single output, multiple input intelligent power source selection device with a low-dropout regulator for either 5VCC or 5VAUX inputs, and a low- resistance bypass switch for the 3.3VAUX input.

Transitions may occur from one input supply to another without generating a glitch, outside of the specification range, on the 3.3-V output. The device has an incorporated reverse blocking scheme to prevent excess leakage from the input terminals in the event that the output voltage is greater than the input voltage.

The input voltage is prioritized in the following order: 5VCC, 5VAUX, and 3.3VAUX.



Please be aware that an important notice concerning availability, standard warranty, and use in critical applications of Texas Instruments semiconductor products and disclaimers thereto appears at the end of this data sheet.

PRODUCTION DATA information is current as of publication date. Products conform to specifications per the terms of Texas Instruments standard warranty. Production processing does not necessarily include testing of all parameters.

Copyright © 2000, Texas Instruments Incorporated

functional block diagram

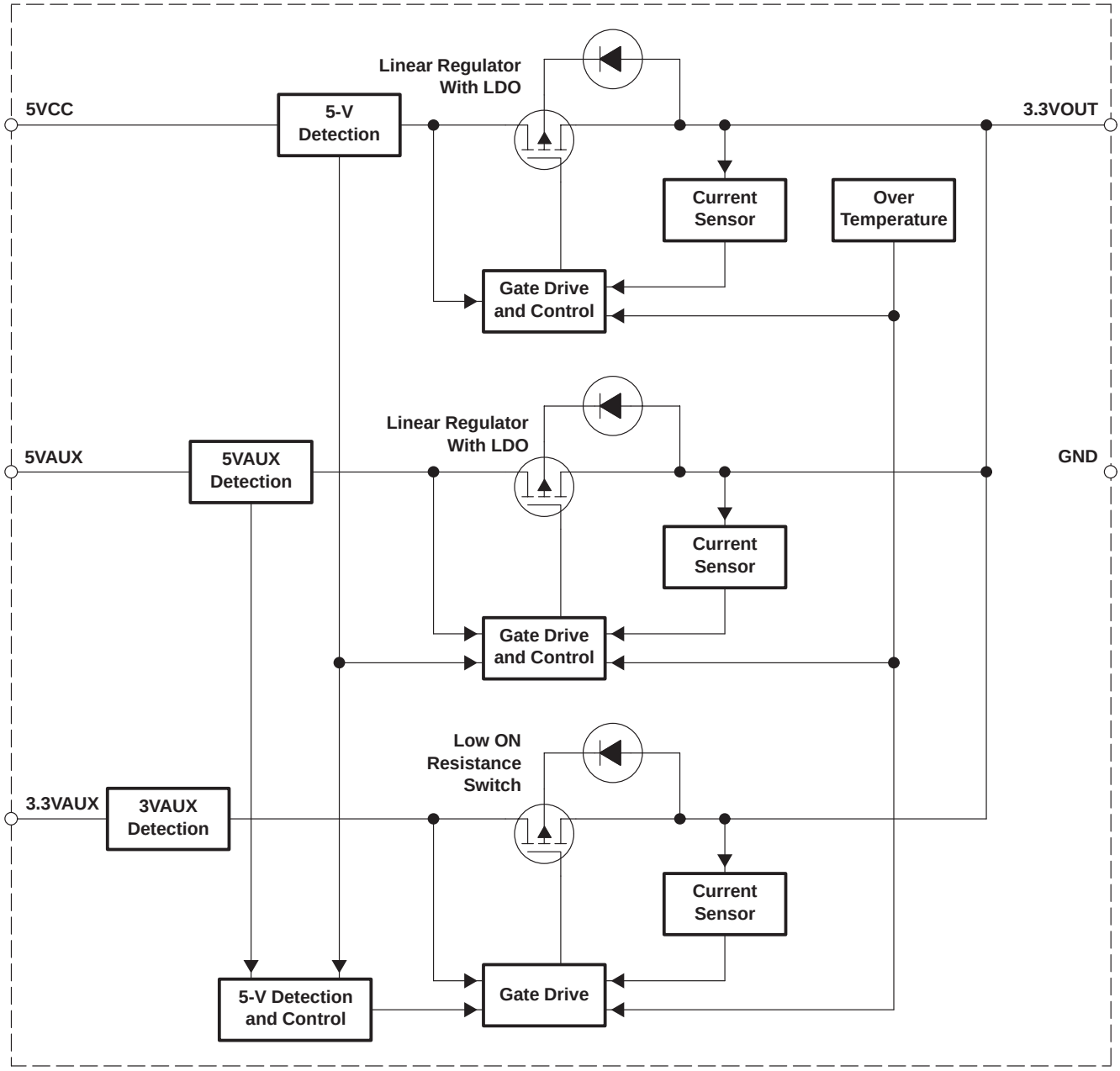

Terminal Functions

TERMINAL NAME	TERMINAL NO.	I/O	DESCRIPTION
3.3VAUX	4	I	3.3-V auxiliary input
3.3VOUT	3	O	3.3-V output with a typical capacitance load of 4.7 μF
5VAUX	1	I	5-V auxiliary input
5VCC	2	I	5-V main input
GND	5, 6, 7, 8	I	Ground

Table 1. Input Selection

INPUT VOLTAGE STATUS (V)			INPUT SELECTED	OUTPUT (V)	OUTPUT (I)
5VCC	5VAUX	3.3VAUX	5VCC/5VAUX/3.3VAUX	3.3VOUT	I_L (mA)
0	0	0	None	0	0
0	0	3.3	3.3VAUX	3.3	375
0	5	0	5VAUX	3.3	400
0	5	3.3	5VAUX	3.3	400
5	0	0	5VCC	3.3	400
5	0	3.3	5VCC	3.3	400
5	5	0	5VCC	3.3	400
5	5	3.3	5VCC	3.3	400

absolute maximum ratings over operating free-air temperature (unless otherwise noted)†

Supply voltage, 5-V main input, $V_{(5VCC)}$ (see Notes 1 and 2) . . . . . 7 V
Auxiliary voltage, 5-V input, $V_{(5VAUX)}$ (see Notes 1 and 2) . . . . . 7 V
Auxiliary voltage, 3.3-V input, $V_{(3.3VAUX)}$ (see Notes 1 and 2) . . . . . 5 V
3.3-V output current limit, $I_{(LIMIT)}$ . . . . . 1.5 A
Continuous power dissipation, P_D (see Note 3) . . . . . 1 W
Electrostatic discharge susceptibility, human body model, $V_{(HBMESD)}$ . . . . . 2 kV
Operating ambient temperature range, T_A . . . . . 0°C to 70°C
Storage temperature range, T_{stg} . . . . . –55°C to 150°C
Operating junction temperature range, T_J . . . . . –5°C to 120°C
Lead temperature (soldering, 10 second), $T_{(LEAD)}$ . . . . . 260°C

† Stresses beyond those listed under “absolute maximum ratings” may cause permanent damage to the device. These are stress ratings only, and functional operation of the device at these or any other conditions beyond those indicated under “recommended operating conditions” is not implied. Exposure to absolute-maximum-rated conditions for extended periods may affect device reliability.

NOTES: 1. All voltage values are with respect to GND.
2. Absolute negative voltage on these terminal should not be below –0.5 V.
3. $R_{\theta JA}$ must be less than 55°C/W, typically achieved with two square inches of copper printed circuit board area connected to the GND terminals for heat dissipation or equivalent.

recommended operating conditions

	MIN	TYP	MAX	UNIT
5-V main input, $V_{(5VCC)}$	4.5		5.5	V
5-V auxiliary input, $V_{(5VAUX)}$	4.5		5.5	V
3.3-V auxiliary input, $V_{(3.3VAUX)}$	3		3.6	V
Load capacitance, C_L	4.23	4.7	5.17	µF
Load current, I_L	0		400	mA
Ambient temperature, T_A	0		70	°C

electrical characteristics over recommended operating free-air temperature range, T_A = 0°C to 70°C, C_L = 4.7 μF (unless otherwise noted)

PARAMETER		TEST CONDITIONS	MIN	TYP	MAX	UNIT
$V_{(5VCC)}$/ $V_{(5VAUX)}$	5-V inputs		4.5	5	5.5	V
$I_{(Q)}$	Quiescent supply current	From 5VCC or 5VAUX terminals, I_L = 0 to 400 mA		2.5	5	mA
		From 3.3VAUX terminal, I_L = 0 A		250	500	μA
I_L	Output load current		0.4			A
$I_{(LIMIT)}$	Output current limit	3.3VOUT = 0 V		1	1.5	A
$T_{(TSD)}$†	Thermal shutdown	3.3VOUT output shorted to 0 V	150		180	°C
T_{hys}†	Thermal hysteresis	3.3VOUT output shorted to 0 V		15		°C
$V_{(3.3VOUT)}$	3.3-V output	I_L = 400 mA	3.135	3.3	3.465	V
C_L	Load capacitance	Minimal ESR to insure stability of regulated output		4.7		μF
$I_{lkg(REV)}$	Reverse leakage output current	Tested for input that is grounded. 3.3VAUX, 5VAUX or 5VCC = GND, 3.3VOUT = 3.3 V			50	μA

† Design targets only. Not tested in production.

5-V detect

PARAMETER		TEST CONDITIONS	MIN	TYP	MAX	UNIT
$V_{(TO_LO)}$	Threshold voltage, low	5VAUX or 5VCC ↓	3.85	4.05	4.25	V
$V_{(TO_HI)}$	Threshold voltage, high	5VAUX or 5VCC ↑	4.1	4.3	4.5	V

auxiliary switch

PARAMETER		TEST CONDITIONS	MIN	TYP	MAX	UNIT
$R_{(SWITCH)}$	Auxiliary switch resistance	5VAUX = 5VCC = 0 V, 3.3VAUX = 3.3 V, I_L = 150 mA			0.4	Ω
$\Delta V_{O(\Delta VI)}$	Line regulation voltage	5VAUX or 5VCC = 4.5 V to 5.5 V		2		mV
$\Delta V_{O(\Delta IO)}$	Load regulation voltage	20 mA < I_L < 400 mA		40		mV
$V_I - V_O$	Dropout voltage	I_L < 400 mA			1	V

thermal characteristics

PARAMETER		MIN	TYP	MAX	UNIT
$R_{\theta JC}$	Thermal impedance, junction-to-case			38	°C/W
$R_{\theta JA}$	Thermal impedance, junction-to-ambient			97	°C/W

THERMAL INFORMATION

To ensure reliable operation of the device, the junction temperature of the output device must be within the safe operating area (SOA). This is achieved by having a means to dissipate the heat generated from the junction of the output structure. There are two components that contribute to thermal resistance. They consist of two paths in series. The first is the junction to case thermal resistance, $R_{\theta JC}$; the second is the case to ambient thermal resistance, $R_{\theta CA}$. The overall junction to ambient thermal resistance, $R_{\theta JA}$, is determined by:

$$R_{\theta JA} = R_{\theta JC} + R_{\theta CA}$$

The ability to efficiently dissipate the heat from the junction is a function of the package style and board layout incorporated in the application. The operating junction temperature is determined by the operating ambient temperature, T_A, and the junction power dissipation, P_J.

The junction temperature, T_J, is equal to the following thermal equation:

$$T_J = T_A + P_J (R_{\theta JC}) + P_J (R_{\theta CA})$$

$$T_J = T_A + P_J (R_{\theta JA})$$

This particular application uses the enhanced 8-pin SO package with an integral fused lead frame (terminals 5 to 8). By incorporating a dedicated heat spreading copper plane of at least two square inches on a double-side printed-circuit board (PCB), a thermal resistance of junction to ambient, $R_{\theta JA}$, of 50°C/W can be obtained.

Alternatively, if no dedicated copper plane is incorporated for this device and the PCB has a multilayer construction, the ground terminals (5 to 8) could be electrically connected to the ground plane of the board. This will provide a means for heat spreading through the copper plane associated within the PCB (GND layer). This concept could provide a thermal resistance from junction to ambient, $R_{\theta JA}$, of 70°C/W if implemented correctly.

Hence, maximum power dissipation allowable for an operating ambient temperature of 70°C, and a maximum junction temperature of 150°C is determined as:

$$P_J = (T_J – T_A) / R_{\theta JA}$$

$$P_J = (150 – 70) / 50 = 1.6 \text{ W}$$

Using two square inches of dedicated copper plane on double-sided PCB,

$$P_J = (150 – 70) / 70 = 1.14 \text{ W}$$

Using a multilayer board and utilizing the ground plane for heat spreading, worst case maximum power dissipation is determined by:

$$P_D = (5.5 – 3) \times 0.4 = 1 \text{ W}$$

Normal operating maximum power dissipation is (see Figure 1):

$$P_D = (5 – 3.3) \times 0.4 = 0.68 \text{ W}$$

THERMAL INFORMATION

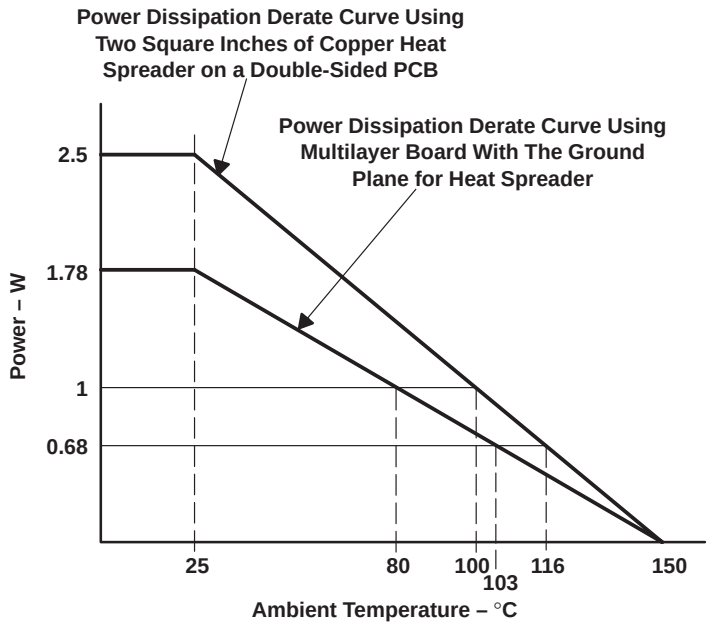

NOTE: These curves are to be used for guideline purposes only. For a particular application, a more specific thermal characterization is required.

Figure 1. Power Dissipation Derating Curves

APPLICATION INFORMATION

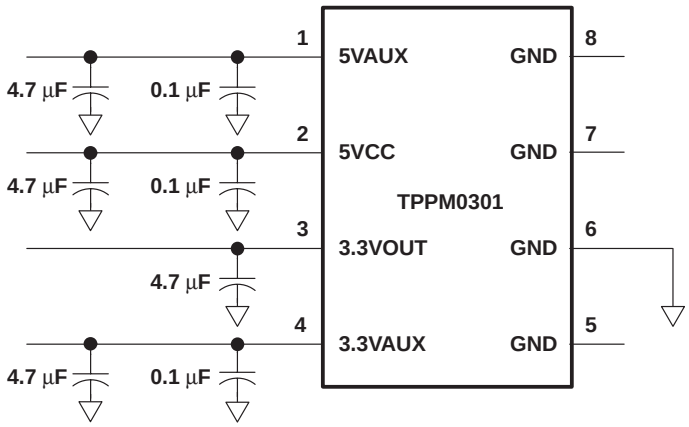

Figure 2. Typical Application Schematic

PACKAGING INFORMATION

Orderable part number	Status (1)	Material type (2)	Package | Pins	Package qty | Carrier	RoHS (3)	Lead finish/ Ball material (4)	MSL rating/ Peak reflow (5)	Op temp (°C)	Part marking (6)
TPPM0301DR	Active	Production	SOIC (D) | 8	2500 | LARGE T&R	Yes	NIPDAU	Level-1-260C-UNLIM	0 to 70	0301
TPPM0301DR.A	Active	Production	SOIC (D) | 8	2500 | LARGE T&R	Yes	NIPDAU	Level-1-260C-UNLIM	0 to 70	0301

(1) **Status:** For more details on status, see our product life cycle.

(2) **Material type:** When designated, preproduction parts are prototypes/experimental devices, and are not yet approved or released for full production. Testing and final process, including without limitation quality assurance, reliability performance testing, and/or process qualification, may not yet be complete, and this item is subject to further changes or possible discontinuation. If available for ordering, purchases will be subject to an additional waiver at checkout, and are intended for early internal evaluation purposes only. These items are sold without warranties of any kind.

(3) **RoHS values:** Yes, No, RoHS Exempt. See the TI RoHS Statement for additional information and value definition.

(4) **Lead finish/Ball material:** Parts may have multiple material finish options. Finish options are separated by a vertical ruled line. Lead finish/Ball material values may wrap to two lines if the finish value exceeds the maximum column width.

(5) **MSL rating/Peak reflow:** The moisture sensitivity level ratings and peak solder (reflow) temperatures. In the event that a part has multiple moisture sensitivity ratings, only the lowest level per JEDEC standards is shown. Refer to the shipping label for the actual reflow temperature that will be used to mount the part to the printed circuit board.

(6) **Part marking:** There may be an additional marking, which relates to the logo, the lot trace code information, or the environmental category of the part.

Multiple part markings will be inside parentheses. Only one part marking contained in parentheses and separated by a "~" will appear on a part. If a line is indented then it is a continuation of the previous line and the two combined represent the entire part marking for that device.

Important Information and Disclaimer: The information provided on this page represents TI's knowledge and belief as of the date that it is provided. TI bases its knowledge and belief on information provided by third parties, and makes no representation or warranty as to the accuracy of such information. Efforts are underway to better integrate information from third parties. TI has taken and continues to take reasonable steps to provide representative and accurate information but may not have conducted destructive testing or chemical analysis on incoming materials and chemicals. TI and TI suppliers consider certain information to be proprietary, and thus CAS numbers and other limited information may not be available for release.

In no event shall TI's liability arising out of such information exceed the total purchase price of the TI part(s) at issue in this document sold by TI to Customer on an annual basis.

TAPE AND REEL INFORMATION

REEL DIMENSIONS

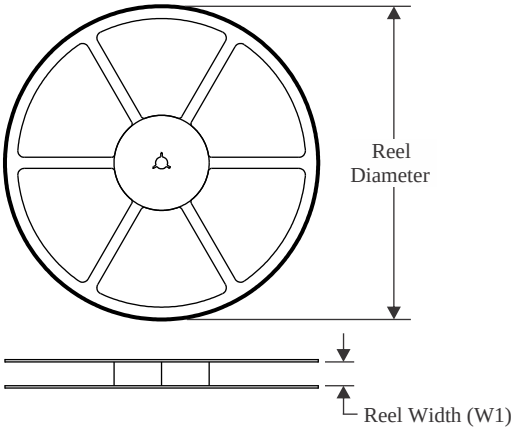

TAPE DIMENSIONS

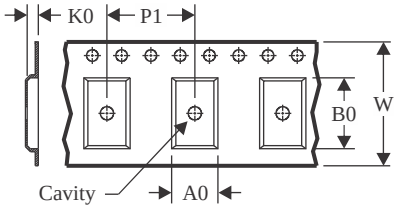

A0	Dimension designed to accommodate the component width
B0	Dimension designed to accommodate the component length
K0	Dimension designed to accommodate the component thickness
W	Overall width of the carrier tape
P1	Pitch between successive cavity centers

QUADRANT ASSIGNMENTS FOR PIN 1 ORIENTATION IN TAPE

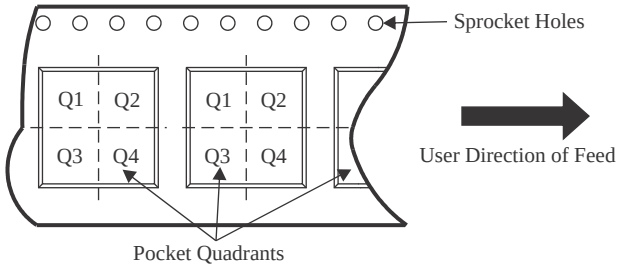

*All dimensions are nominal

Device	Package Type	Package Drawing	Pins	SPQ	Reel Diameter (mm)	Reel Width W1 (mm)	A0 (mm)	B0 (mm)	K0 (mm)	P1 (mm)	W (mm)	Pin1 Quadrant
TPPM0301DR	SOIC	D	8	2500	330.0	12.4	6.4	5.2	2.1	8.0	12.0	Q1

TAPE AND REEL BOX DIMENSIONS

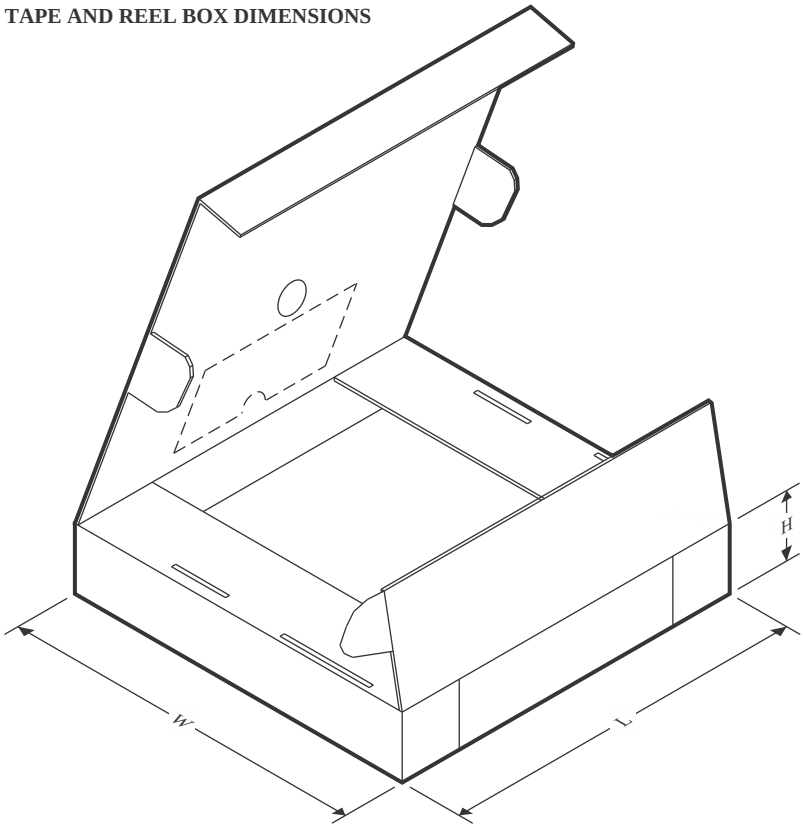

*All dimensions are nominal

Device	Package Type	Package Drawing	Pins	SPQ	Length (mm)	Width (mm)	Height (mm)
TPPM0301DR	SOIC	D	8	2500	340.5	338.1	20.6

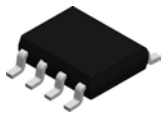

PACKAGE OUTLINE

D0008A

SOIC - 1.75 mm max height

SMALL OUTLINE INTEGRATED CIRCUIT

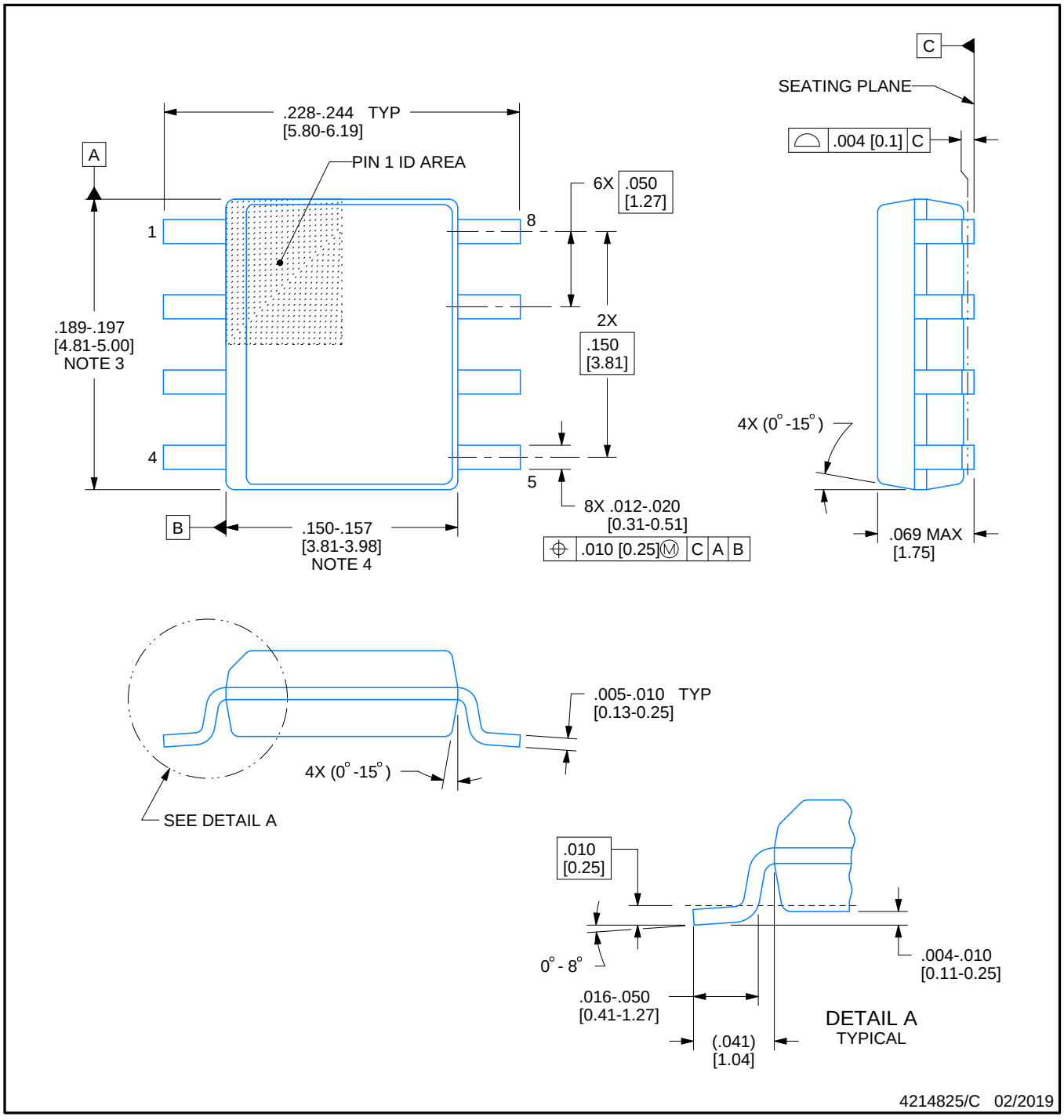

NOTES:

1. Linear dimensions are in inches [millimeters]. Dimensions in parenthesis are for reference only. Controlling dimensions are in inches. Dimensioning and tolerancing per ASME Y14.5M.
2. This drawing is subject to change without notice.
3. This dimension does not include mold flash, protrusions, or gate burrs. Mold flash, protrusions, or gate burrs shall not exceed .006 [0.15] per side.
4. This dimension does not include interlead flash.
5. Reference JEDEC registration MS-012, variation AA.

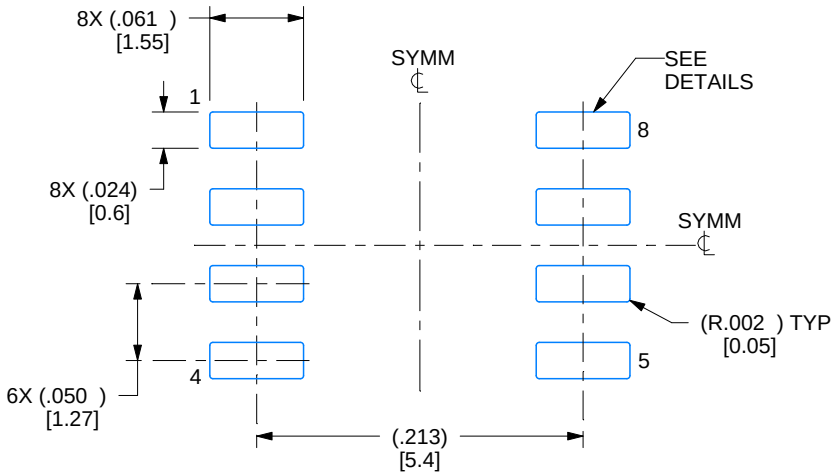

LAND PATTERN EXAMPLE
EXPOSED METAL SHOWN
SCALE:8X

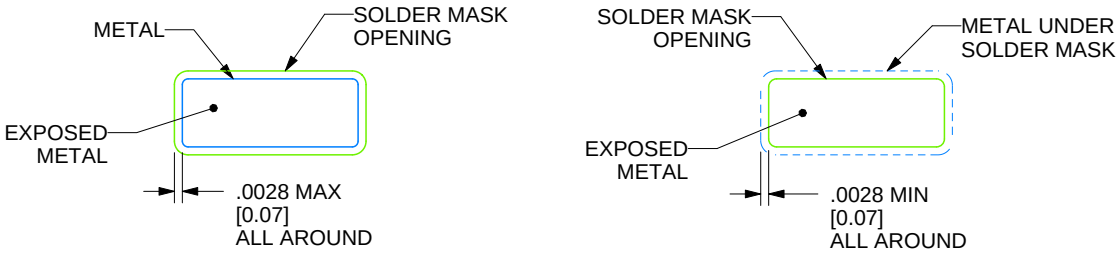

SOLDER MASK DETAILS

4214825/C 02/2019

NOTES: (continued)

6. Publication IPC-7351 may have alternate designs.
7. Solder mask tolerances between and around signal pads can vary based on board fabrication site.

EXAMPLE STENCIL DESIGN

D0008A

SOIC - 1.75 mm max height

SMALL OUTLINE INTEGRATED CIRCUIT

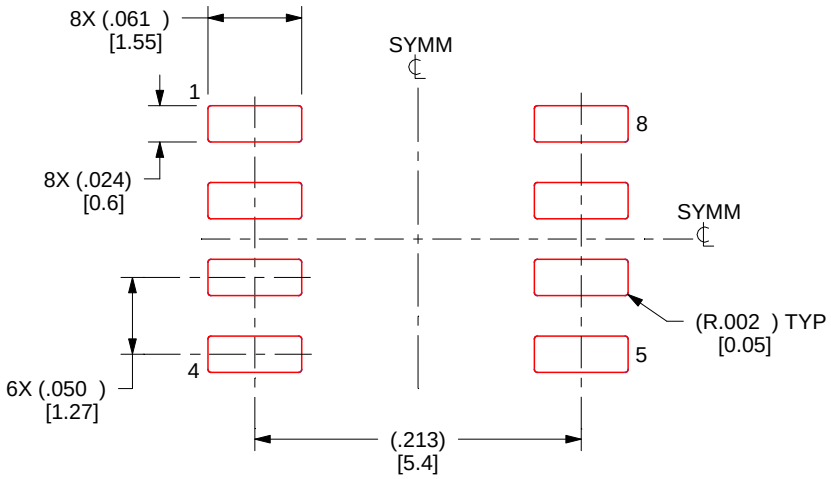

SOLDER PASTE EXAMPLE
BASED ON .005 INCH [0.125 MM] THICK STENCIL
SCALE:8X

4214825/C 02/2019

NOTES: (continued)

8. Laser cutting apertures with trapezoidal walls and rounded corners may offer better paste release. IPC-7525 may have alternate design recommendations.
9. Board assembly site may have different recommendations for stencil design.

IMPORTANT NOTICE AND DISCLAIMER

TI PROVIDES TECHNICAL AND RELIABILITY DATA (INCLUDING DATASHEETS), DESIGN RESOURCES (INCLUDING REFERENCE DESIGNS), APPLICATION OR OTHER DESIGN ADVICE, WEB TOOLS, SAFETY INFORMATION, AND OTHER RESOURCES “AS IS” AND WITH ALL FAULTS, AND DISCLAIMS ALL WARRANTIES, EXPRESS AND IMPLIED, INCLUDING WITHOUT LIMITATION ANY IMPLIED WARRANTIES OF MERCHANTABILITY, FITNESS FOR A PARTICULAR PURPOSE OR NON-INFRINGEMENT OF THIRD PARTY INTELLECTUAL PROPERTY RIGHTS.

These resources are intended for skilled developers designing with TI products. You are solely responsible for (1) selecting the appropriate TI products for your application, (2) designing, validating and testing your application, and (3) ensuring your application meets applicable standards, and any other safety, security, regulatory or other requirements.

These resources are subject to change without notice. TI grants you permission to use these resources only for development of an application that uses the TI products described in the resource. Other reproduction and display of these resources is prohibited. No license is granted to any other TI intellectual property right or to any third party intellectual property right. TI disclaims responsibility for, and you fully indemnify TI and its representatives against any claims, damages, costs, losses, and liabilities arising out of your use of these resources.

TI’s products are provided subject to TI’s Terms of Sale, TI’s General Quality Guidelines, or other applicable terms available either on ti.com or provided in conjunction with such TI products. TI’s provision of these resources does not expand or otherwise alter TI’s applicable warranties or warranty disclaimers for TI products. Unless TI explicitly designates a product as custom or customer-specified, TI products are standard, catalog, general purpose devices.

TI objects to and rejects any additional or different terms you may propose.

Copyright © 2025, Texas Instruments Incorporated

Last updated 10/2025

ENTEGRECİ

Bu belge www.entegreci.com üzerinden sunulmaktadır.

Elektronik komponent tedarikinde Entegreci

Entegreci, Eskişehir merkezli, Türkiye geneline satış yapan bir elektronik komponent mağazasıdır. Entegreler (IC), mikrodenetleyiciler, transistörler, diyotlar, pasif elemanlar, konnektörler, modüller ve geliştirme kartları tek adetten seri üretim adetlerine kadar satılır. Ürün sayfalarında güncel stok durumunu, fiyatı ve datasheet bağlantısını bulabilirsiniz.

Parça koduyla arama

Üretici parça numarasını yazın; stok ve fiyatı hemen görün.

www.entegreci.com

Ürün kategorileri

Entegreden kapasitöre tüm elektronik komponent kategorileri.

Kategorilere göz atın

Üreticiler

Aradığınız üreticinin ürünlerini tek sayfada inceleyin.

Üreticileri görün

Toplu alım ve teklif

Listede olmayan ya da yüksek adetli parçalar için teklif isteyin.

Teklif isteyin

www.entegreci.com | **destek@entegreci.com** | **0850 305 90 34**

Entegreci is an online electronic components store based in Türkiye. Search by manufacturer part number to see stock, prices and datasheets for integrated circuits, microcontrollers, transistors, passive components and connectors, or request a quote for parts that are not listed.

Bu sayfa Entegreci tarafından eklenmiştir. Belgenin önceki sayfaları asıl yayıncısına aittir ve içeriği değiştirilmemiştir; en güncel sürüm için belgenin yayıncısına başvurun.