TI Designs

EMC Compliant High Side Current Sensing with Overvoltage Protection

TI Designs

TI Designs provide the foundation that you need including methodology, testing and design files to quickly evaluate and customize and system. TI Designs help *you* accelerate your time to market.

Design Resources

TIDA-00126	Design Files
INA282	Product Folder

TI E2E™ Community

ASK Our Analog Experts
WebBench Calculator Tools

Design Features

- Wide common mode input range: –14 V to 80 V
- Overvoltage protection: 45 V
- EFT protection up to 1 kV as per IEC61000-4-4
- > 130 dB Common Mode Rejection Ratio (CMRR) for DC-10 Hz
- Overall accuracy better than 2%
- 70-µV offset and 1.4% gain error

Featured Applications

- Factory automation: PLC 24-V DC bus current monitoring
- 24-V system/board level current sensing
- Bi-directional motor control
- Smart battery packs and chargers
- Solar inverters
- 28-V auxiliary input current measurement for aerospace
- Electric hybrid vehicles

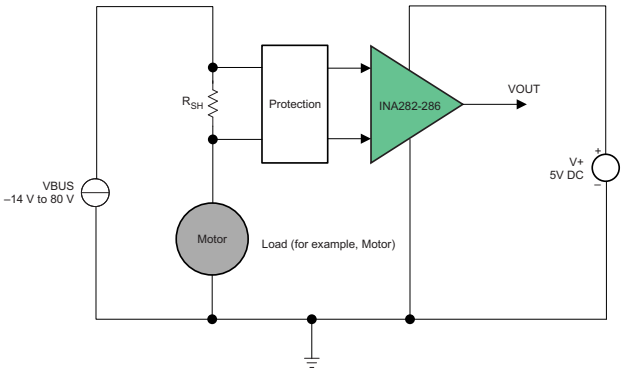

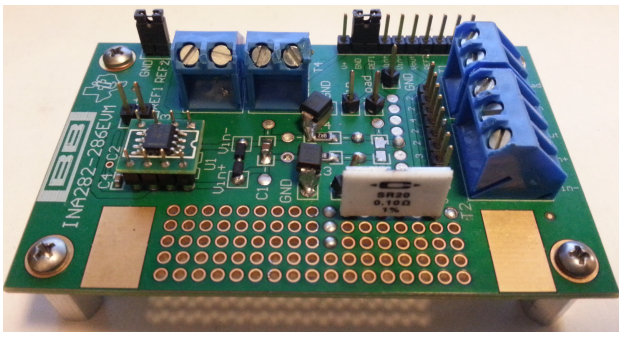

An IMPORTANT NOTICE at the end of this TI reference design addresses authorized use, intellectual property matters and other important disclaimers and information.

Copyright © 2014, Texas Instruments Incorporated

1 Overview

High-side precision current sensing is widespread - from industrial equipment like protection relays, solenoid or motor control, test equipment and solar inverters to consumer equipment like smart phones, tablets, servers and battery chargers. Engines can use the amount of current being delivered to a load to make safety-critical decisions and avoid failures due to overcurrent or short-circuit conditions by maintaining the load current within safe operating limits.

This reference design focuses on EMC-compliant high-side current sense solutions using the INA282, INA283, INA284, INA285, and INA286 family of voltage output current shunt monitor devices. These devices help designers achieve highly-accurate current-monitoring solutions in a wide range of common-mode voltages from –14V to +80V. This device family also supports bi-directional operation that may be required in battery operated equipment where charging and discharging currents need to be monitored. Clearly, these devices are likely to encounter very high and dynamic changes in common mode voltages when accessing their power supplies. This ability is useful in applications when current shunt monitor devices must interface with a low-voltage analog-to-digital converter (ADC). In such a scenario, both the current shunt monitor device and the ADC can be powered with the same supply voltage regardless of the system's common-mode voltage.

2 Design Specifications

The high-side current sense is designed to meet the following specifications:

- Load supply up to 24 V
- Overvoltage protection up to 45 V
- Device supply voltage of 5 VDC
- 1 kV electrical fast transient (EFT) withstanding capability
- Overall accuracy better than 2%

3 Circuit Diagram

A circuit diagram of high-side current sensing with improved transient immunity is shown in Figure 1.

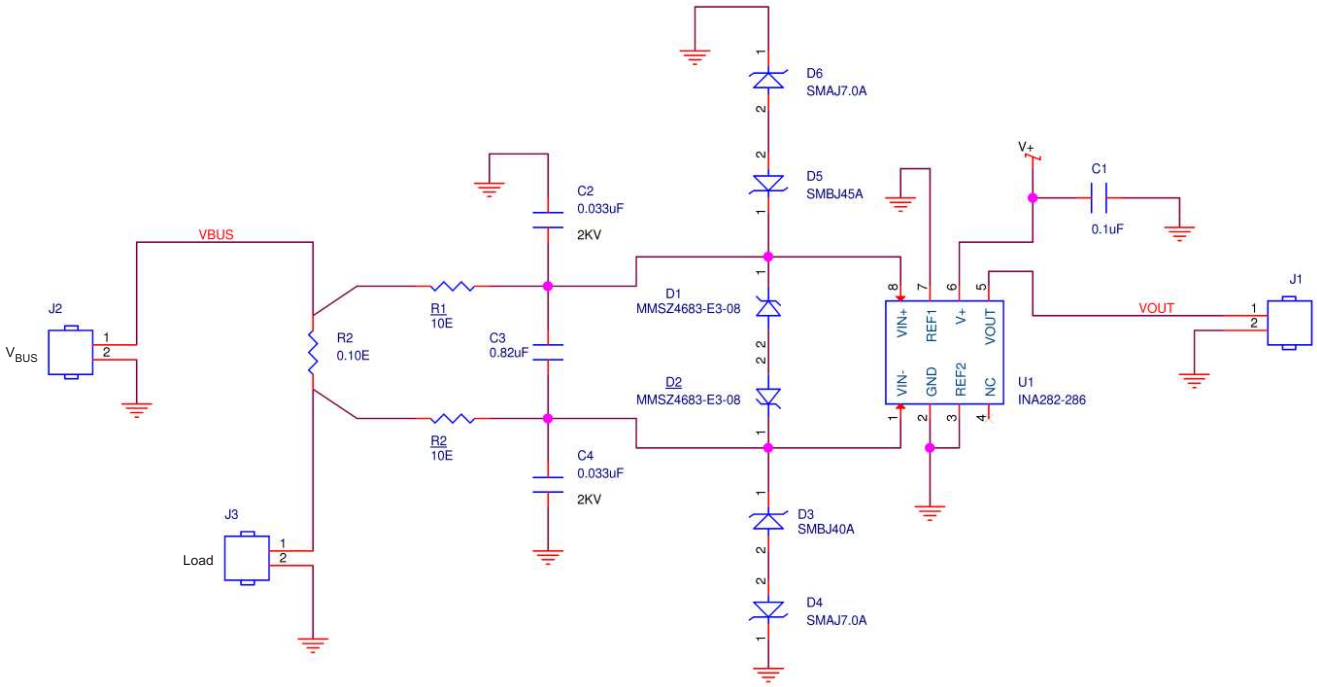

Figure 1. High-Side Current Sensing with Improved Transient Immunity

Copyright © 2014, Texas Instruments Incorporated

4 Theory of Operation

The system implementing high-side current sensing puts a shunt resistor between the supply voltage (V_{BUS}) and the load. High-side current sensing is desirable as any downstream failure can be detected and appropriate corrective action can be triggered. High-side current sensing can be seen as a small sense voltage riding on top of a high common mode voltage. That is why high-side current shunt monitors must have a common mode voltage range outside the load's supply voltage and a very high CMRR. Current sense monitors encounter high voltage transients and overvoltage events frequently in the fields. Transient voltage can cause severe damage and failure of the device. Overcoming unwanted damaging transient threats is one of the biggest challenges in the design. Therefore, adding robust EMC protection externally becomes a necessity. The EMC protection circuit should protect the device from the transient high voltages and maintain stable output to keep the circuit working even when transient conditions occur.

The INA282-286 devices are voltage output, high-side measurement, unidirectional and bi-directional, and zero-drift current shunt monitors. This family of devices has predetermined gains that range from 50 V/V to 1000 V/V. The corresponding gain of the specific device amplifies the voltage developed across the device inputs. The output pin presents the voltage. The INA282-286 devices can sense voltage drops across shunts at common-mode voltages between –14 V to 80 V, independent of supply voltages and 140 dB CMRR (Typical). These devices operate with supply voltages between 2.7 V and 18 V and draw a maximum of 900-µA supply current. The INA282-286 devices are used for accurate measurements well outside of their own power-supply voltages (V+). For example, the V+ power supply can be 5 V while the common-mode voltage may be as high as +80 V.

The output of the device is proportional to the current through the sense resistor:

$V_{OUT} = (GAIN \times R_{SH} \times I_{LOAD}) + V_{REF} = GAIN \times V_{SH} + V_{REF}$

Where, V_{REF} is the average of V_{REF1} and V_{REF2}.

Note: V_{REF1} and V_{REF2} control the V_{OUT} level for bi-directional operation. Make sure V_{REF} is sufficiently high such that output voltage does not exceed the allowed output swing of the device. The output voltage swings above V_{REF} for positive sense current direction and below V_{REF} for negative sense current direction. The output voltage stays at V_{REF} when V_{SH} is zero.

For unidirectional current sensing, REF1 and REF2 pins connect to the ground. Then, represent output voltage as:

$V_{OUT} = GAIN \times R_{SH} \times I_{LOAD} = GAIN \times V_{SH}$

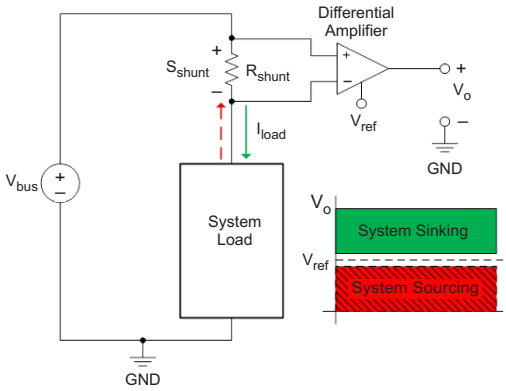

Device	Gain (V/V)
INA282	50
INA286	100
INA283	200
INA284	500
INA285	1000

Figure 2. Typical High Side Current Sensing

Copyright © 2014, Texas Instruments Incorporated

4.1 Sizing Shunt Resistor (R_{SH})

Selection of the correct sense resistor is vital for accurate current measurement in an application. To determine the size of the shunt resistors, the following parameters must be known:

- Full scale load current
- Available supply voltage for the device (V+ = 5 VDC)
- Minimum load voltage requirement (or maximum permissible voltage loss in the measurement line)
- Accuracy

Resolve trade-offs while selecting and calculating the optimum value of R_{SH}:

Increasing R_{SH} increases the V_{SH}, which provides better accuracy because voltage offset and input bias current errors become less significant.	**versus**	A large R_{SH} value increases the $I^2\times$ R losses which in-turn increases self-heating and changes the value of R_{SH} and also causes higher voltage loss that must meet the load's minimum voltage requirement.
Increasing R_{SH} increases the V_{SH} which must not exceed the input voltage swing specified by the device.	**versus**	The minimum value of R_{SH} is set by input dynamic range, input offset voltage, and resolution requirements.
Tighter tolerance, low TCR, low thermal EMF, 2-pin or 4-pin sense resistor, all need a very low inductance resistor if the current being sensed contains high-frequencies. (Wire-wound resistors have higher inductance compared to metal-film resistors.)	**versus**	Cost

Step 1: Output Voltage Swing

Find the output voltage swing from the device datasheet, which is:

(GND + 0.4 V) < V_{OUT} < (V+ – 0.4 V); where V+ is 5 VDC

0.4 V < V_{OUT} < 5 V – 0.4 V

Output voltage swing: 0.4 V < V_{OUT} < 4.6 V

Step 2: Input Sense Voltage Range

Refer the above relation to input by dividing it with device gain. For the INA282 device, the gain is 50 V/V.

Input sense voltage (V_{SH}) range: 800 µV < V_{SH} < 92 mV for the given power supply (V+) of 5 V

Step 3: Maximum Sense Resistor

If a peak load current of 0.8 A is expected in an application and the maximum input sense voltage $V_{SH\ (MAX)}$ must not exceed 92 mV, use this formula:

$$R_{SH\ (MAX)} = \frac{V_{SH\ (MAX)}}{I_{L\ (MAX)}} = \frac{92\ mV}{0.8\ A} = 115\ m\Omega \quad (1)$$

Choose a value for the reference design: **$R_{SH\ (MAX)}$ = 100 mΩ.**

Note: For most applications, the best performance is attained with an R_{SH} value that provides a full-scale sense voltage.

Step 4: Minimum Load Current

Find the minimum load current $I_{L\ (MIN)}$:

Either the total error budget of the device or the minimum input sense voltage $V_{SH\ (MIN)}$ = 800 µV (whichever is more) limits the minimum load current ($I_{L\ (MIN)}$) that can be accurately represented by the INA282.

$$I_{L\ (MIN)} = \frac{V_{SH\ (MIN)}}{R_{SH}} = \frac{800\ \mu V}{100\ m\Omega} \quad (2)$$

$I_{L\ (MIN)}$ = 8 mA

Copyright © 2014, Texas Instruments Incorporated

So, the minimum load current ($I_{L\ (MIN)}$) producing change in the output voltage is greater than or equal to 8 mA.

Step 5: Maximum Power Dissipation

Maximum Power Dissipation: $P_{SH\ (MAX)} = I_{L\ (MAX)}^2 \times R_{SH} = (0.8\ A \times 0.8\ A) \times 100\ m\Omega$

$P_{SH\ (MAX)}$ = 64 mW

Select a sense resistor having maximum power dissipation more than 64 mW.

Note: If the engineer allows the sense resistor to dissipate more power, the sense resistor heats up and its maximum power distribution value drifts.

Step 6: Voltage Loss

Find the maximum voltage loss caused by the sense resistor using(R_{SH}) using this formula:

Maximum voltage loss = $V_{SH\ (MAX)}$ = 80 mV

Example: If the V_{BUS} = 24 V, then the minimum voltage delivered to the load is:

$V_{L\ (MIN)} = V_{BUS} - V_{SH\ (MAX)} = 24\ V - 0.080\ V = 23.92\ V$

Make sure the minimum voltage delivered meets the minimum voltage requirement of the load.

4.2 Recommended PCB Layout for R_{SH}

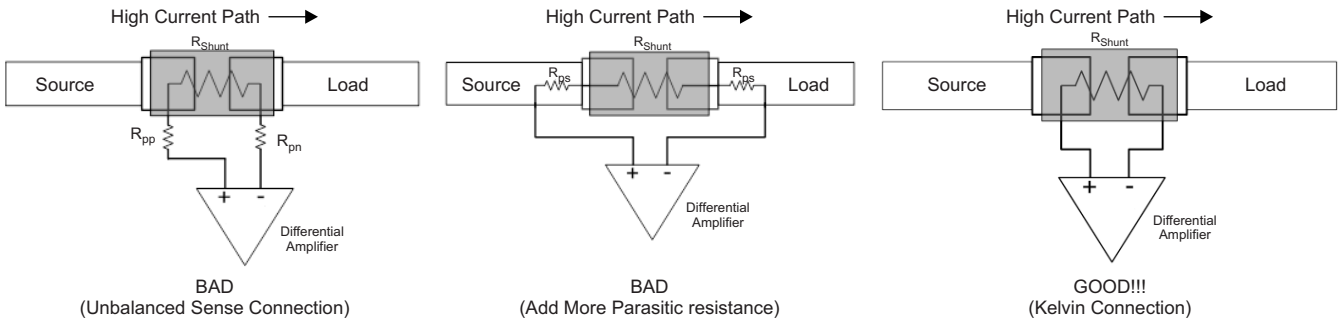

Be aware of PCB layout parasitic:

- Always ensure that the sense resistor is Kelvin-connected.
- Make the input traces as short as possible.
- Make the input traces as balanced as possible.
- Place the current sensing device and shunt on the same side of the PCB.
- To determine an error contributed by device, measure the voltage across device pins not across the sense resistor.

4.3 Transient Protection

In industrial and automotive environments, electronic devices can be subjected to wide input voltage variations resulting from operating relays, solenoid switching, inductive load kick-back, load dump pulses, and reverse polarity. A load dump condition occurs when the load from the generator delivering current is abruptly disconnected. A load dump condition can be up to +80 V. Battery polarity reversal causes a negative input of common mode voltage up to –12 V. In the event the device is exposed to transients on input in excess of its ratings, then external transient absorbers (zener or TVS diodes) are required. The TVS safeguards sensitive devices and common circuitry by clamping the voltage level and diverting transient currents when a trigger voltage is reached. This design uses two unidirectional transient voltage suppressors in series with opposite polarities on VIN+ and VIN– pins to take care of the asymmetrical common mode voltage rating of the device. The two series opposite zener diode D1 and D2 placed between the differential inputs of INA282 make sure the differential input voltage never exceeds its absolute maximum rating of ±5 V.

$$\text{Pulse Current} = I_P = \frac{(1000\ V - V_C)}{Z_S + R_S} \quad (3)$$

When V_C is the clamping voltage of TVS at I_P:

Copyright © 2014, Texas Instruments Incorporated

Z_S is the source impedance of the EFT pulse generator and R_S is the external series filter resistance.

Z_S = 50 Ω and R_S = 10 Ω.

$$\text{Clamping Voltage} = V_C = \frac{I_P}{I_{PP(MAX)}}\left[V_{C(MAX)} - V_{BR(MAX)}\right] + V_{BR(MAX)} \quad (4)$$

$$\text{Pulse Power Dissipation} = P_P = V_C \times I_P \quad (5)$$

D3 and D5 TVS Selection:

Usually select a TVS diode having a stand-off voltage or working voltage greater than the maximum expected V_{BUS} so that the TVS does operate or interfere during the normal operation. For PLC applications, the 24-V supply may go up to 20% higher than 24-V nominal supply voltage. Any positive transient voltages are quickly clamped below 80 V.

This is why 28.8 V < V_R and $V_{C\ (MAX)}$ < 80 V (Maximum common mode voltage rating of the device).

D4 and D6 TVS Selection:

For any negative transient voltages, select a TVS diode that clamps before reaching 14 V.

Once the primary selection is done, solve equations 1, 2, and 3 to find-out the following parameters which are important for TVS selection:

- Pulse current (I_P) flowing through the TVS
- Clamping voltage (V_C) across the TVS at I_P
- Pulse power (P_{PP}) in the TVS at V_C and I_P

Make sure clamping voltage across D3 and D5 does not exceed 80 V (in fact, the clamping voltage should be well within 80 V) during a 1-kV positive fast transient event. Likewise, make sure clamping the voltage across D4 and D6 does not exceed 14 V (in fact, should be well within 14 V) during 1-kV negative fast transient event.

Make sure the pulse power dissipation in any of the TVSs exceed their maximum allowed peak pulse power dissipation ratings.

To perform the transient protection job, the following TVS diodes have been selected:

D3 and D5:

SMBJ40A (Rating: V_R = 40 V, $V_{C\ (MAX)}$ = 64.5 V at $I_{PP\ (MAX)}$ = 9.3 V and $P_{PP\ (MAX)}$ = 600 W at 10/1000 µs or greater than 10 kW at 5/50 ns).

Use the TVS ratings; solve for equations 1, 2, and 3 for I_P, V_C and P_P:

I_P = 15.42 A

V_C = 74.7 V, which is less than 80 V common mode voltage rating of INA282.

$P_P = V_C$ X I_P = 1152 W

D4 and D6: SMAJ7.0A (Rating: V_R = 7 V, $V_{C\ (MAX)}$ = 12 V at $I_{PP\ (MAX)}$ = 33.3 V and $P_{PP\ (MAX)}$ = 400 W at 10/1000 µs or greater than 10 kW at 5/50 ns)

Use the TVS ratings; solve for equations 1, 2, and 3 for I_P, V_C and P_P:

I_P = 16.5 A

V_C = 10.3 V, which is less than 14-V common mode voltage rating of INA282.

$P_P = V_C \times I_P$ = 170 W

The rise and fall time for an EFT pulse are 5 ns and 50 ns, respectively, as illustrated in Figure 3. The pulse width is 55 ns (less than 0.1 µs).

Copyright © 2014, Texas Instruments Incorporated

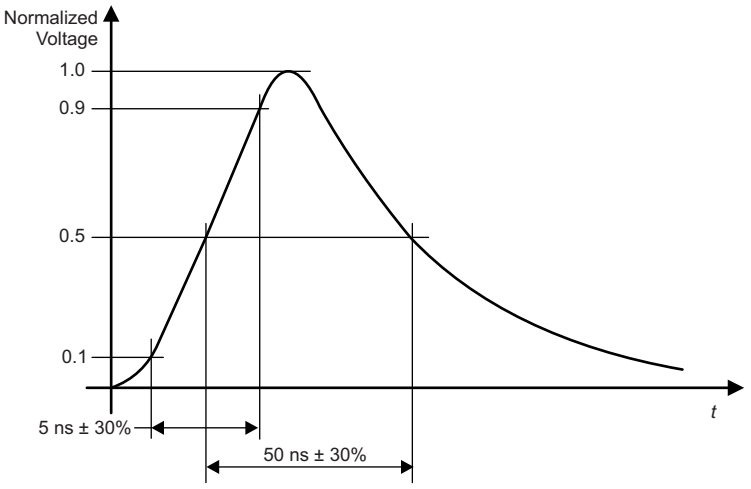

Figure 3. EFT Pulse

The SMBJ40A and SMAJ7.0A transient voltage suppressors in the design have peak pulse power ratings of 600 W and 500 W, respectively, when tested with a convention of 10/1000 µs double exponential waveform. The TVS manufacturer provides a peak pulse power versus pulse time graph, which shows how a shorter or longer duration affects the peak pulse power of a TVS. For shorter pulse widths, TVS can withstand higher peak pulse power. Therefore, for 5/50 ns EFT pulses, SMBJ40A and SMAJ7.0A transient voltage suppressors can sustain more than 10 kW peak pulse power.

4.4 Input Filter

TI placed an EMI/RFI filter network between the sense resistor and the INA282 device input pins to reject any ac noise, fast transients and current spikes. EFT bursts is a wideband phenomenon with spectral components up to hundreds of MHz. EFT bursts appear as common mode pulses to the high side current shunt monitor devices. The input filter uses RC components to provide both common-mode and differential filtering. The common mode filter uses 0.033 µF/2 kV Y-Cap to take care of high voltage high frequency common mode transients (EFT bursts).

The differential filter cut-off frequency is calculated as:

$$F_{DMC} = \frac{1}{2\pi \times \left[R1 + R2\right] \times \left[\left(\frac{C2 \times C4}{C2 + C4}\right) + C3\right]} = \frac{1}{2\pi \times 2 \times 10\ \Omega \times 0.8365\ \mu F} \quad (6)$$

F_{DMC} = 9.6 kHz (approximately)

Adding any external filter resistor in series with the current shunt monitor's input will cause additional gain error and degrade CMR due to resistance value mismatch.

$$\%\ \text{Gain Error} = 100 - 100 \times \frac{R_{IN}}{R_{IN} + R_{FILTER}} = 100 - 100 \times \frac{6K}{6K + R_{FILTER}} \quad (7)$$

R_{IN} is the internal input impedance of the INA282 current shunt monitor.

If the inputs use a pair of 10-Ω, 1% resistors, additional gain error will be 0.1664%. To ensure better accuracy, the filter resistor should be less than or equal to 10 Ω. The engineer can also determine the worst-case gain error by inserting extreme tolerances of R_{FILTER} and R_{IN} in the above equation. Therefore, the filter resistor must have 1% tolerance or better.

Copyright © 2014, Texas Instruments Incorporated

4.5 Source of Errors

The following list includes all the possible error sources:

- Input offset voltage
- Input offset voltage drift with temperature
- Input offset voltage drift with time
- Input offset current
- Gain error
- Linearity error
- Common mode rejection
- Power supply rejection
- Sense resistor tolerance
- Reference common mode rejection
- Addition gain error due to external filter resistance mismatch

Refer to the **CALCULATING TOTAL ERROR** section of the INA282 datasheet (SBOS485) for information about how these errors affect the overall accuracy.

For small differential signals at the input, the error is dominated by the amplifier's offset voltage. Low input offset is critical to achieving accurate measurements at the low end of the dynamic range.
For large differential signals at the input, the error is dominated by the amplifier's gain error.

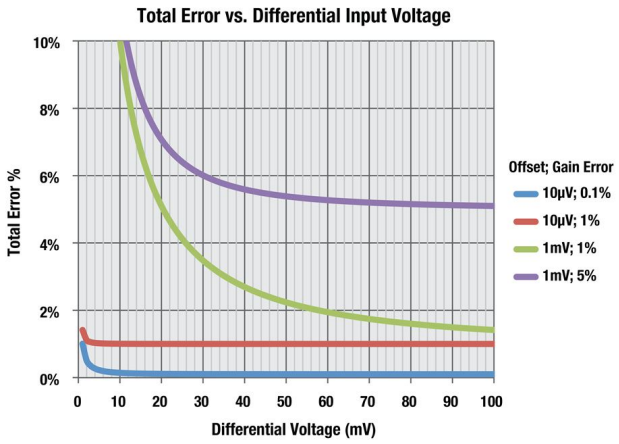

Copyright © 2014, Texas Instruments Incorporated

5 EFT Test Setup

Example EFT test setups are illustrated in Figure 4 and Figure 5.

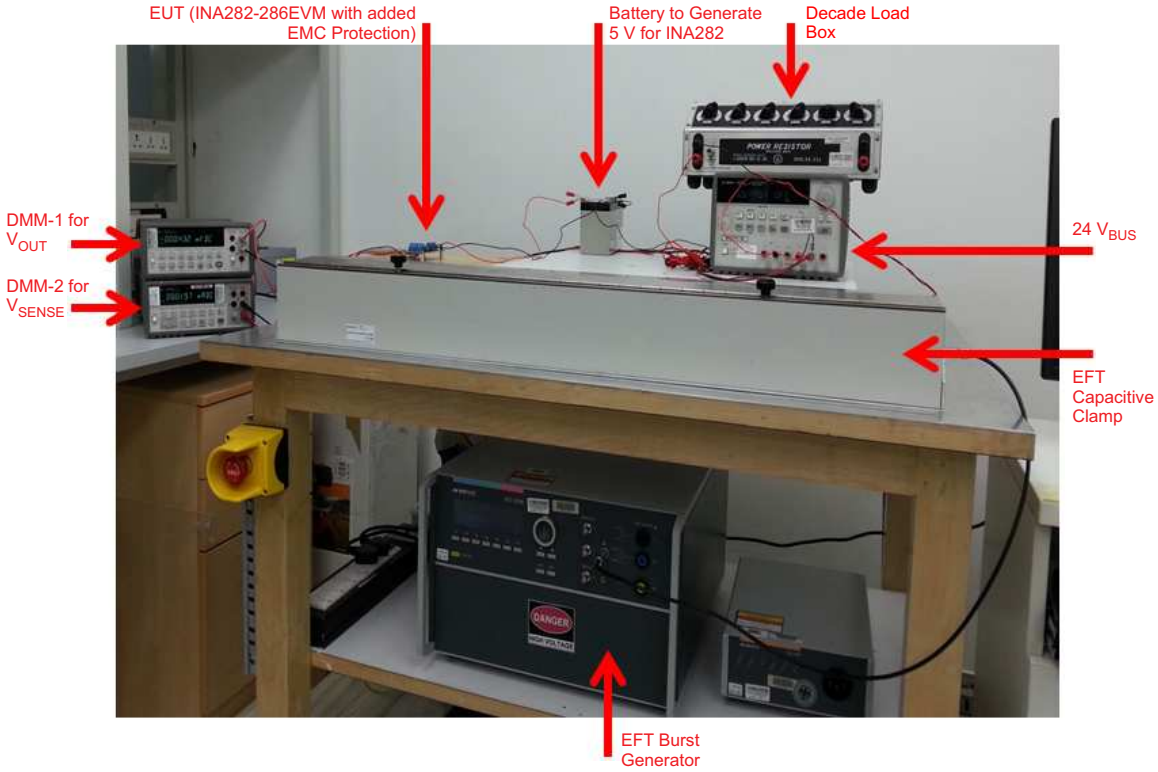

Figure 4. EFT Test Setup View 1

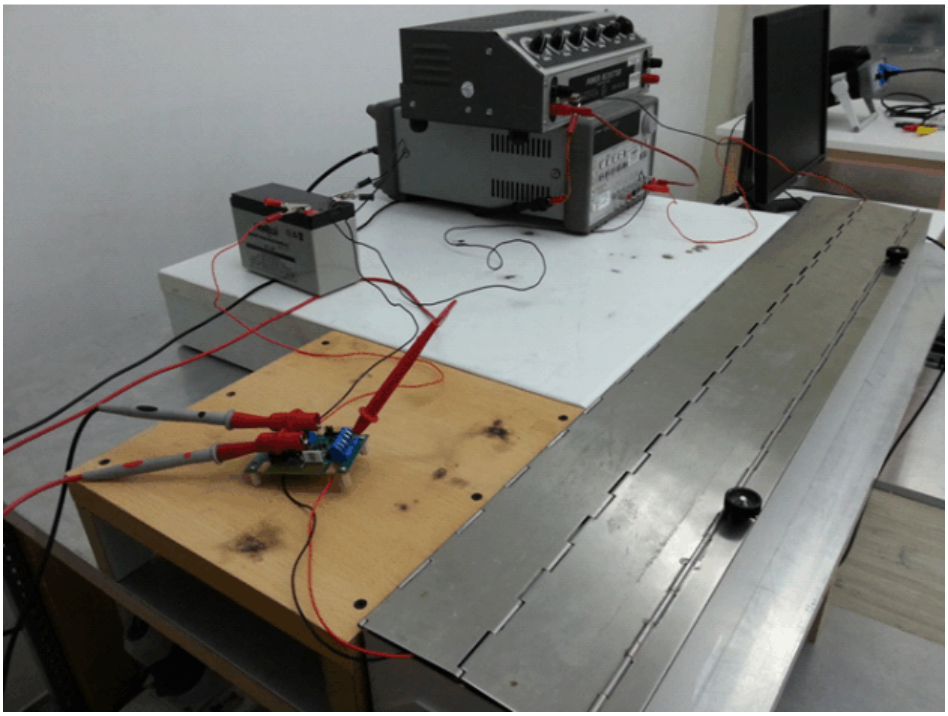

Figure 5. EFT Test Setup View 2

Copyright © 2014, Texas Instruments Incorporated

The EFT test setup consists of:

- Two 6½ digital multi-meters (DMMs) → One DMM measures V_{SH} and other measures V_{OUT}
- EUT → Modified INA282-286EVM
- Battery → Provides 5 VDC supply to INA282 device
- 24-V regulated power supply → Used as 24-V load supply
- EFT burst generator → Generates the 1 kV, 5 kHz and 100 kHz EFT burst pulses for 1 minute duration
- Capacitive clamp → To couple EFT pulses to the EUT as a common mode input voltage
- Decade box load → Used to set the desired load value

The two DMMs are put in MIN-MAX mode to capture and log the minimum and maximum excursions on V_{SH} and V_{OUT} during the application of EFT pluses. After the test is complete, minimum and maximum values of V_{SH} and V_{OUT} are retrieved from the DMMs. Later these values are used to calculate the accuracy.

6 Pre-Compliance EFT Test Results

The design has been implemented utilizing an existing high-side current monitor evaluation module (INA282-286EVM) and the module was modified to add the low pass filter, zener diodes and TVS to meet the EFT bursts test as per IEC61000-4-4. The output voltage accuracy can be calculated as:

$$\%\ \Delta V_{OUT} = \frac{\text{Measured Output Voltage} - \text{Theoretical Output Voltage}}{\text{Theoretical Output Voltage}} = \frac{\left|V_{OUT} - \left(\text{GAIN} \times V_{SH}\right)\right|}{\text{GAIN} \times V_{SH}} \times 100 \quad (8)$$

Test Conditions: the following conditions apply to the results shown in Table 1 and Table 2: V_{BUS} = 24 VDC, V+ = 5 VDC, Device used is INA282, $GAIN_{INA282}$ = 50 V/V, Load resistance = 30.0 Ω and R_{SH} = 0.1 Ω at 25°C.

Table 1. Test 1

Test Name/Condition	Shunt Voltage (V_{SH})	Output Voltage (V_{OUT})	% Error
Functional	80.870 mV	4.0390 V	0.1113%

Table 2. Test 2 EFT Burst

Test Name/Condition	Shunt Voltage (V_{SH})	Output Voltage (V_{OUT})	% Error
1000 V, 100 kHz, negative pulses	80.471441 mV	4.069547 V	1.143%
1000 V, 100 kHz, positive pulses	81.10343 mV	4.017819 V	0.9211%
1000 V, 5 kHz, negative pulses	80.93304 mV	4.036456 V	0.252%
1000 V, 5 kHz, positive pulses	80.99869 mV	4.036590 V	0.33%

7 Conclusion

The reference design presents the details for designing high-side current shunt monitors with EMC protection that meets an overall accuracy of 2%. Adding an external filter to the current shunt monitor might degrade the performance unless designed with appropriate considerations. TI offers INA282 voltage-output with high-side current sense monitors. These monitors solve the common and often challenging problem of measuring high-side current, especially when common-mode dynamics go negative below ground. The common-mode voltage range for the INA282 is independent of the supply voltage. The zero-drift architecture, unique input stage topology, and the precisely trimmed internal resistor of the INA282 experiences very low offset voltage and offset drift over temperature and time that is crucial to maintain accuracy in high voltage applications with a high degree of dynamic changes in common-mode voltage.

Copyright © 2014, Texas Instruments Incorporated

IMPORTANT NOTICE FOR TI REFERENCE DESIGNS

Texas Instruments Incorporated ("TI") reference designs are solely intended to assist designers (“Buyers”) who are developing systems that incorporate TI semiconductor products (also referred to herein as “components”). Buyer understands and agrees that Buyer remains responsible for using its independent analysis, evaluation and judgment in designing Buyer’s systems and products.

TI reference designs have been created using standard laboratory conditions and engineering practices. **TI has not conducted any testing other than that specifically described in the published documentation for a particular reference design.** TI may make corrections, enhancements, improvements and other changes to its reference designs.

Buyers are authorized to use TI reference designs with the TI component(s) identified in each particular reference design and to modify the reference design in the development of their end products. HOWEVER, NO OTHER LICENSE, EXPRESS OR IMPLIED, BY ESTOPPEL OR OTHERWISE TO ANY OTHER TI INTELLECTUAL PROPERTY RIGHT, AND NO LICENSE TO ANY THIRD PARTY TECHNOLOGY OR INTELLECTUAL PROPERTY RIGHT, IS GRANTED HEREIN, including but not limited to any patent right, copyright, mask work right, or other intellectual property right relating to any combination, machine, or process in which TI components or services are used. Information published by TI regarding third-party products or services does not constitute a license to use such products or services, or a warranty or endorsement thereof. Use of such information may require a license from a third party under the patents or other intellectual property of the third party, or a license from TI under the patents or other intellectual property of TI.

TI REFERENCE DESIGNS ARE PROVIDED "AS IS". TI MAKES NO WARRANTIES OR REPRESENTATIONS WITH REGARD TO THE REFERENCE DESIGNS OR USE OF THE REFERENCE DESIGNS, EXPRESS, IMPLIED OR STATUTORY, INCLUDING ACCURACY OR COMPLETENESS. TI DISCLAIMS ANY WARRANTY OF TITLE AND ANY IMPLIED WARRANTIES OF MERCHANTABILITY, FITNESS FOR A PARTICULAR PURPOSE, QUIET ENJOYMENT, QUIET POSSESSION, AND NON-INFRINGEMENT OF ANY THIRD PARTY INTELLECTUAL PROPERTY RIGHTS WITH REGARD TO TI REFERENCE DESIGNS OR USE THEREOF. TI SHALL NOT BE LIABLE FOR AND SHALL NOT DEFEND OR INDEMNIFY BUYERS AGAINST ANY THIRD PARTY INFRINGEMENT CLAIM THAT RELATES TO OR IS BASED ON A COMBINATION OF COMPONENTS PROVIDED IN A TI REFERENCE DESIGN. IN NO EVENT SHALL TI BE LIABLE FOR ANY ACTUAL, SPECIAL, INCIDENTAL, CONSEQUENTIAL OR INDIRECT DAMAGES, HOWEVER CAUSED, ON ANY THEORY OF LIABILITY AND WHETHER OR NOT TI HAS BEEN ADVISED OF THE POSSIBILITY OF SUCH DAMAGES, ARISING IN ANY WAY OUT OF TI REFERENCE DESIGNS OR BUYER’S USE OF TI REFERENCE DESIGNS.

TI reserves the right to make corrections, enhancements, improvements and other changes to its semiconductor products and services per JESD46, latest issue, and to discontinue any product or service per JESD48, latest issue. Buyers should obtain the latest relevant information before placing orders and should verify that such information is current and complete. All semiconductor products are sold subject to TI’s terms and conditions of sale supplied at the time of order acknowledgment.

TI warrants performance of its components to the specifications applicable at the time of sale, in accordance with the warranty in TI’s terms and conditions of sale of semiconductor products. Testing and other quality control techniques for TI components are used to the extent TI deems necessary to support this warranty. Except where mandated by applicable law, testing of all parameters of each component is not necessarily performed.

TI assumes no liability for applications assistance or the design of Buyers’ products. Buyers are responsible for their products and applications using TI components. To minimize the risks associated with Buyers’ products and applications, Buyers should provide adequate design and operating safeguards.

Reproduction of significant portions of TI information in TI data books, data sheets or reference designs is permissible only if reproduction is without alteration and is accompanied by all associated warranties, conditions, limitations, and notices. TI is not responsible or liable for such altered documentation. Information of third parties may be subject to additional restrictions.

Buyer acknowledges and agrees that it is solely responsible for compliance with all legal, regulatory and safety-related requirements concerning its products, and any use of TI components in its applications, notwithstanding any applications-related information or support that may be provided by TI. Buyer represents and agrees that it has all the necessary expertise to create and implement safeguards that anticipate dangerous failures, monitor failures and their consequences, lessen the likelihood of dangerous failures and take appropriate remedial actions. Buyer will fully indemnify TI and its representatives against any damages arising out of the use of any TI components in Buyer’s safety-critical applications.

In some cases, TI components may be promoted specifically to facilitate safety-related applications. With such components, TI’s goal is to help enable customers to design and create their own end-product solutions that meet applicable functional safety standards and requirements. Nonetheless, such components are subject to these terms.

No TI components are authorized for use in FDA Class III (or similar life-critical medical equipment) unless authorized officers of the parties have executed an agreement specifically governing such use.

Only those TI components that TI has specifically designated as military grade or “enhanced plastic” are designed and intended for use in military/aerospace applications or environments. Buyer acknowledges and agrees that any military or aerospace use of TI components that have ***not*** been so designated is solely at Buyer's risk, and Buyer is solely responsible for compliance with all legal and regulatory requirements in connection with such use.

TI has specifically designated certain components as meeting ISO/TS16949 requirements, mainly for automotive use. In any case of use of non-designated products, TI will not be responsible for any failure to meet ISO/TS16949.

Mailing Address: Texas Instruments, Post Office Box 655303, Dallas, Texas 75265
Copyright © 2014, Texas Instruments Incorporated

ENTEGRECİ

Bu belge www.entegreci.com üzerinden sunulmaktadır.

Elektronik komponent tedarikinde Entegreci

Entegreci, Eskişehir merkezli, Türkiye geneline satış yapan bir elektronik komponent mağazasıdır. Entegreler (IC), mikrodenetleyiciler, transistörler, diyotlar, pasif elemanlar, konnektörler, modüller ve geliştirme kartları tek adetten seri üretim adetlerine kadar satılır. Ürün sayfalarında güncel stok durumunu, fiyatı ve datasheet bağlantısını bulabilirsiniz.

Parça koduyla arama

Üretici parça numarasını yazın; stok ve fiyatı hemen görün.

www.entegreci.com

Ürün kategorileri

Entegreden kapasitöre tüm elektronik komponent kategorileri.

Kategorilere göz atın

Üreticiler

Aradığınız üreticinin ürünlerini tek sayfada inceleyin.

Üreticileri görün

Toplu alım ve teklif

Listede olmayan ya da yüksek adetli parçalar için teklif isteyin.

Teklif isteyin

www.entegreci.com | **destek@entegreci.com** | **0850 305 90 34**

Entegreci is an online electronic components store based in Türkiye. Search by manufacturer part number to see stock, prices and datasheets for integrated circuits, microcontrollers, transistors, passive components and connectors, or request a quote for parts that are not listed.

Bu sayfa Entegreci tarafından eklenmiştir. Belgenin önceki sayfaları asıl yayıncısına aittir ve içeriği değiştirilmemiştir; en güncel sürüm için belgenin yayıncısına başvurun.