EF Series Power MOSFET With Fast Body Diode

Thin-Lead TO-220 FULLPAK



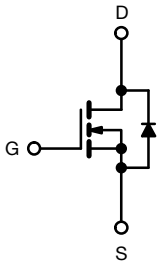

N-Channel MOSFET

FEATURES

- Low figure-of-merit (FOM) R_{on} x Q_g
- Low input capacitance (C_{iss})
- Reduced switching and conduction losses
- Ultra low gate charge (Q_g)
- Avalanche energy rated (UIS)
- Material categorization: for definitions of compliance please see www.vishay.com/doc?99912

RoHS COMPLIANT
HALOGEN FREE

APPLICATIONS

- Server and telecom power supplies
- Switch mode power supplies (SMPS)
- Power factor correction power supplies (PFC)
- Lighting
  - High-intensity discharge (HID)
  - Fluorescent ballast lighting
- Industrial
  - Welding
  - Induction heating
  - Motor drives
  - Battery chargers
  - Renewable energy
  - Solar (PV inverters)

PRODUCT SUMMARY		
V_{DS} (V) at T_J max.	650	
$R_{DS(on)}$ typ. (Ω) at 25 °C	V_{GS} = 10 V	0.158
Q_g max. (nC)	96	
Q_{gs} (nC)	9	
Q_{gd} (nC)	21	
Configuration	Single	

ORDERING INFORMATION	
Package	Thin-Lead TO-220 FULLPAK
Lead (Pb)-free and halogen-free	SiHA22N60EF-GE3

ABSOLUTE MAXIMUM RATINGS (T_C = 25 °C, unless otherwise noted)

PARAMETER			SYMBOL	LIMIT	UNIT
Drain-source voltage			V_{DS}	600	V
Gate-source voltage			V_{GS}	± 30	
Continuous drain current (T_J = 150 °C) [e]	V_{GS} at 10 V	T_C = 25 °C	I_D	19	A
		T_C = 100 °C		12	
Pulsed drain current [a]			I_{DM}	46	
Linear derating factor				0.26	W/°C
Single pulse avalanche energy [b]			E_{AS}	144	mJ
Maximum power dissipation			P_D	33	W
Operating junction and storage temperature range			T_J, T_{stg}	-55 to +150	°C
Drain-source voltage slope	T_J = 125 °C		dv/dt	70	V/ns
Reverse diode dv/dt [d]				50	
Soldering recommendations (peak temperature) [c]	For 10 s			260	°C
Mounting torque, M3 screw				0.6	Nm

Notes

a. Repetitive rating; pulse width limited by maximum junction temperature
b. V_{DD} = 140 V, starting T_J = 25 °C, L = 28.2 mH, R_g = 25 Ω, I_{AS} = 3.2 A
c. 1.6 mm from case
d. $I_{SD} \leq I_D$, di/dt = 400 A/µs, starting T_J = 25 °C
e. Limited by maximum junction temperature

For technical questions, contact: hvm@vishay.com

THIS DOCUMENT IS SUBJECT TO CHANGE WITHOUT NOTICE. THE PRODUCTS DESCRIBED HEREIN AND THIS DOCUMENT ARE SUBJECT TO SPECIFIC DISCLAIMERS, SET FORTH AT www.vishay.com/doc?91000

THERMAL RESISTANCE RATINGS				
PARAMETER	**SYMBOL**	**TYP.**	**MAX.**	**UNIT**
Maximum junction-to-ambient	R_{thJA}	-	65	°C/W
Maximum junction-to-case (drain)	R_{thJC}	-	3.8	

SPECIFICATIONS (T_J = 25 °C, unless otherwise noted)						
PARAMETER	**SYMBOL**	**TEST CONDITIONS**	**MIN.**	**TYP.**	**MAX.**	**UNIT**
Static						
Drain-source breakdown voltage	V_{DS}	V_{GS} = 0 V, I_D = 250 µA	600	-	-	V
V_{DS} temperature coefficient	$\Delta V_{DS}/T_J$	Reference to 25 °C, I_D = 1 mA	-	0.68	-	V/°C
Gate-source threshold voltage (N)	$V_{GS(th)}$	V_{DS} = V_{GS}, I_D = 250 µA	2.0	-	4.0	V
Gate-source leakage	I_{GSS}	V_{GS} = ± 20 V	-	-	± 100	nA
		V_{GS} = ± 30 V	-	-	± 1	µA
Zero gate voltage drain current	I_{DSS}	V_{DS} = 480 V, V_{GS} = 0 V	-	-	1	µA
		V_{DS} = 480 V, V_{GS} = 0 V, T_J = 125 °C	-	-	500	
Drain-source on-state resistance	$R_{DS(on)}$	V_{GS} = 10 V; I_D = 11 A	-	0.158	0.182	Ω
Forward transconductance [a]	g_{fs}	V_{DS} = 30 V, I_D = 11 A	-	5.8	-	S
Dynamic						
Input capacitance	C_{iss}	V_{GS} = 0 V, V_{DS} = 100 V, f = 1 MHz	-	1423	-	pF
Output capacitance	C_{oss}		-	73	-	
Reverse transfer capacitance	C_{rss}		-	5	-	
Effective output capacitance, energy related [a]	$C_{o(er)}$	V_{DS} = 0 V to 480 V, V_{GS} = 0 V	-	48	-	
Effective output capacitance, time related [b]	$C_{o(tr)}$		-	240	-	
Total gate charge	Q_g	V_{GS} = 10 V; I_D = 11 A, V_{DS} = 480 V	-	48	96	nC
Gate-source charge	Q_{gs}		-	9	-	
Gate-drain charge	Q_{gd}		-	21	-	
Turn-on delay time	$t_{d(on)}$	V_{DD} = 480 V, I_D = 11 A, V_{GS} = 10 V, R_g = 9.1 Ω	-	15	30	ns
Rise time	t_r		-	21	42	
Turn-off delay time	$t_{d(off)}$		-	58	87	
Fall time	t_f		-	25	50	
Gate input resistance	R_g	f = 1 MHz, open drain	0.3	0.6	1.2	Ω
Drain-Source Body Diode Characteristics						
Continuous source-drain diode current	I_S	MOSFET symbol showing the integral reverse p - n junction diode 	-	-	19	A
Pulsed diode forward current	I_{SM}		-	-	46	
Diode forward voltage	V_{SD}	T_J = 25 °C, I_S = 11 A, V_{GS} = 0 V	-	-	1.2	V
Reverse recovery time	t_{rr}	T_J = 25 °C, I_F = I_S = 11 A, di/dt = 100 A/µs, V_R = 400 V	-	113	226	ns
Reverse recovery charge	Q_{rr}		-	0.7	1.4	µC
Reverse recovery current	I_{RRM}		-	11	-	A

Notes

a. $C_{oss(er)}$ is a fixed capacitance that gives the same energy as C_{oss} while V_{DS} is rising from 0 % to 80 % V_{DSS}

b. $C_{oss(tr)}$ is a fixed capacitance that gives the same charging time as C_{oss} while V_{DS} is rising from 0 % to 80 % V_{DSS}

For technical questions, contact: hvm@vishay.com
THIS DOCUMENT IS SUBJECT TO CHANGE WITHOUT NOTICE. THE PRODUCTS DESCRIBED HEREIN AND THIS DOCUMENT ARE SUBJECT TO SPECIFIC DISCLAIMERS, SET FORTH AT www.vishay.com/doc?91000

TYPICAL CHARACTERISTICS (25 °C, unless otherwise noted)

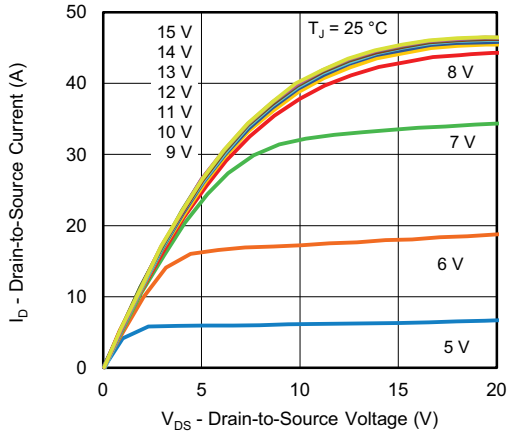

Fig. 1 - Typical Output Characteristics

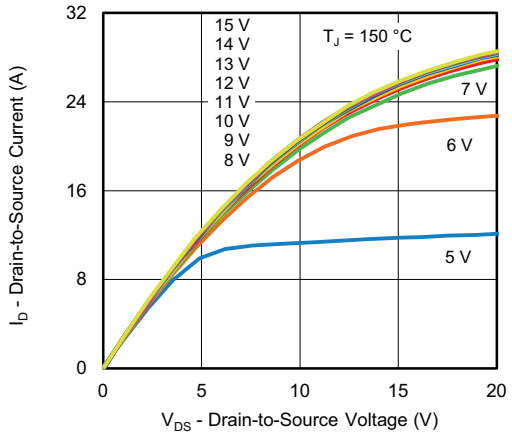

Fig. 2 - Typical Output Characteristics

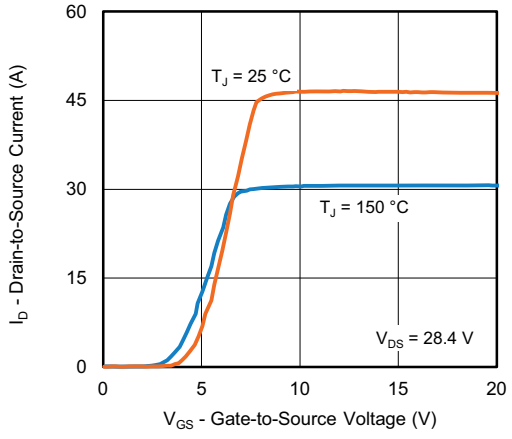

Fig. 3 - Typical Transfer Characteristics

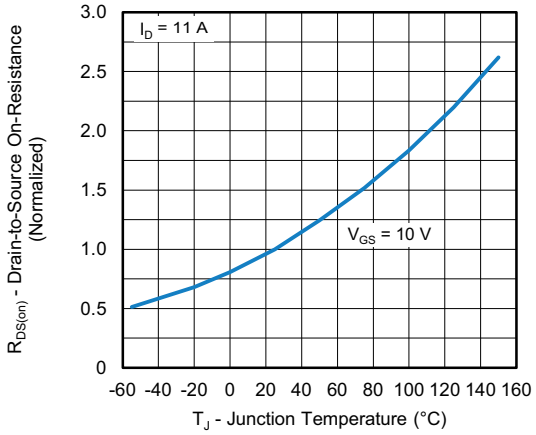

Fig. 4 - Normalized On-Resistance vs. Temperature

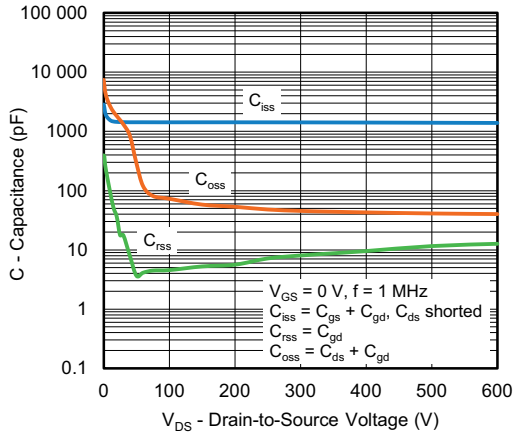

Fig. 5 - Typical Capacitance vs. Drain-to-Source Voltage

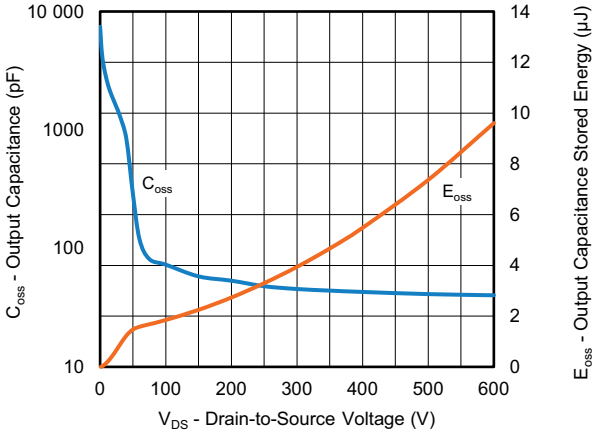

Fig. 6 - C_{oss} and E_{oss} vs. V_{DS}

For technical questions, contact: hvm@vishay.com
THIS DOCUMENT IS SUBJECT TO CHANGE WITHOUT NOTICE. THE PRODUCTS DESCRIBED HEREIN AND THIS DOCUMENT ARE SUBJECT TO SPECIFIC DISCLAIMERS, SET FORTH AT www.vishay.com/doc?91000

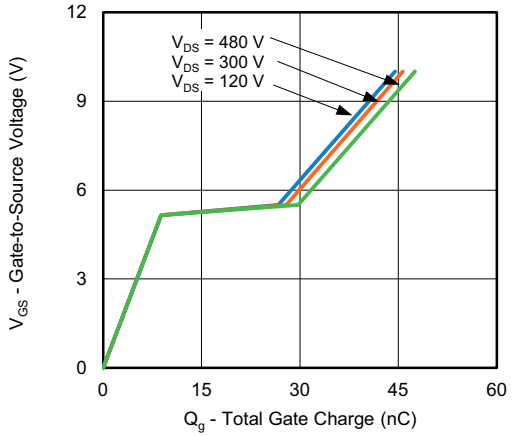

Fig. 7 - Typical Gate Charge vs. Gate-to-Source Voltage

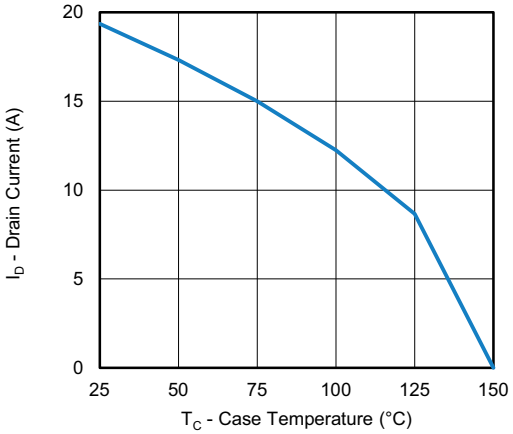

Fig. 10 - Maximum Drain Current vs. Case Temperature

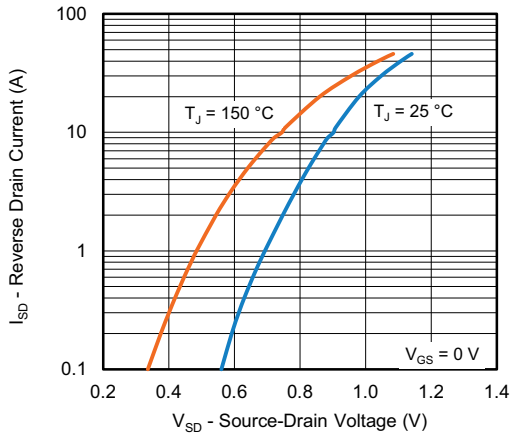

Fig. 8 - Typical Source-Drain Diode Forward Voltage

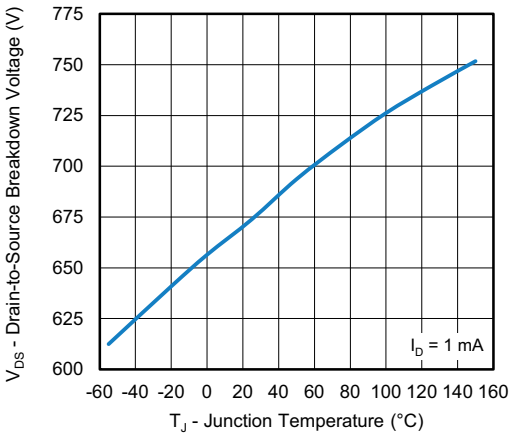

Fig. 11 - Temperature vs. Drain-to-Source Voltage

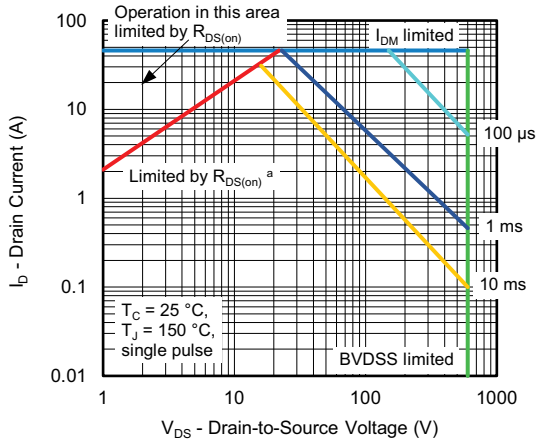

Fig. 9 - Maximum Safe Operating Area

Note

a. V_{GS} > minimum V_{GS} at which $R_{DS(on)}$ is specified

For technical questions, contact: hvm@vishay.com
THIS DOCUMENT IS SUBJECT TO CHANGE WITHOUT NOTICE. THE PRODUCTS DESCRIBED HEREIN AND THIS DOCUMENT ARE SUBJECT TO SPECIFIC DISCLAIMERS, SET FORTH AT www.vishay.com/doc?91000

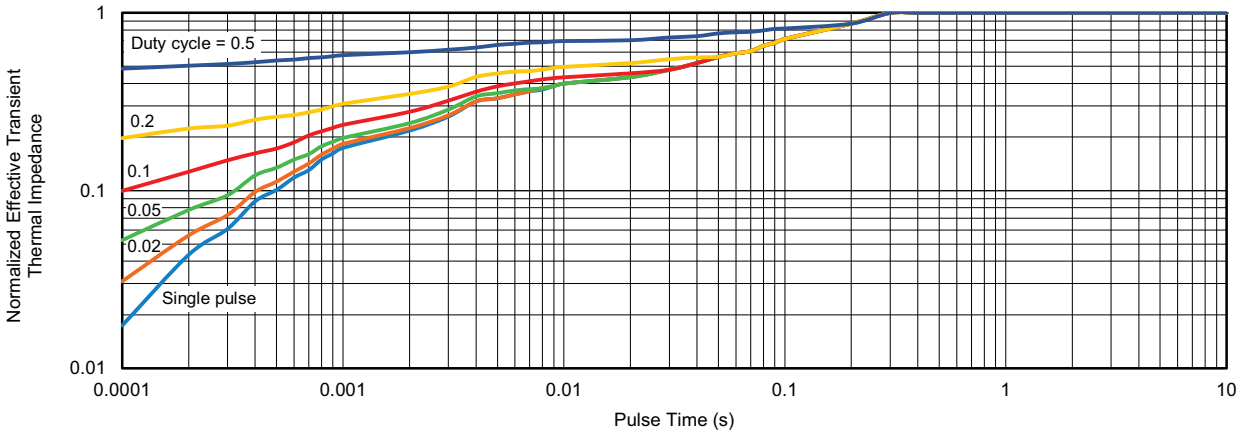

Fig. 12 - Normalized Transient Thermal Impedance, Junction-to-Case

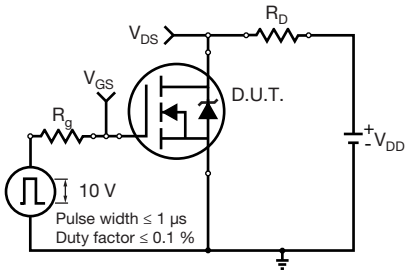

Fig. 13 - Switching Time Test Circuit

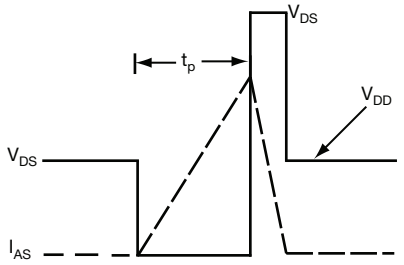

Fig. 16 - Unclamped Inductive Waveforms

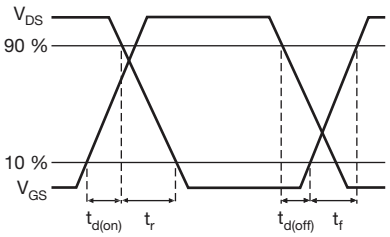

Fig. 14 - Switching Time Waveforms

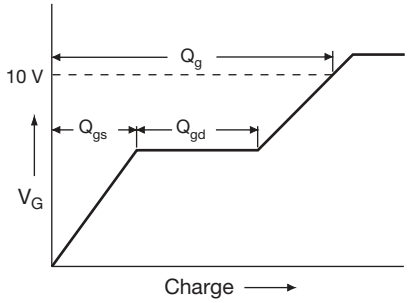

Fig. 17 - Basic Gate Charge Waveform

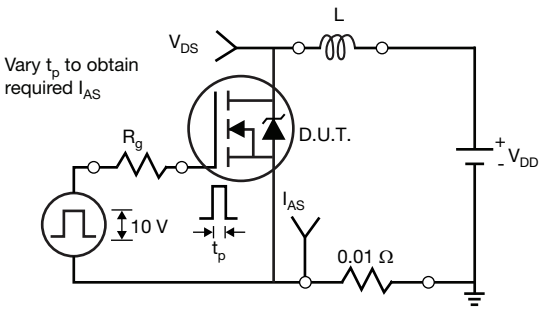

Fig. 15 - Unclamped Inductive Test Circuit

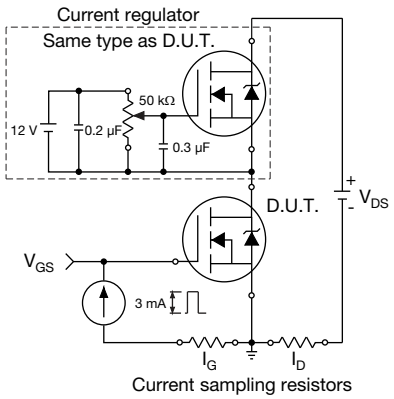

Fig. 18 - Gate Charge Test Circuit

For technical questions, contact: hvm@vishay.com
THIS DOCUMENT IS SUBJECT TO CHANGE WITHOUT NOTICE. THE PRODUCTS DESCRIBED HEREIN AND THIS DOCUMENT ARE SUBJECT TO SPECIFIC DISCLAIMERS, SET FORTH AT www.vishay.com/doc?91000

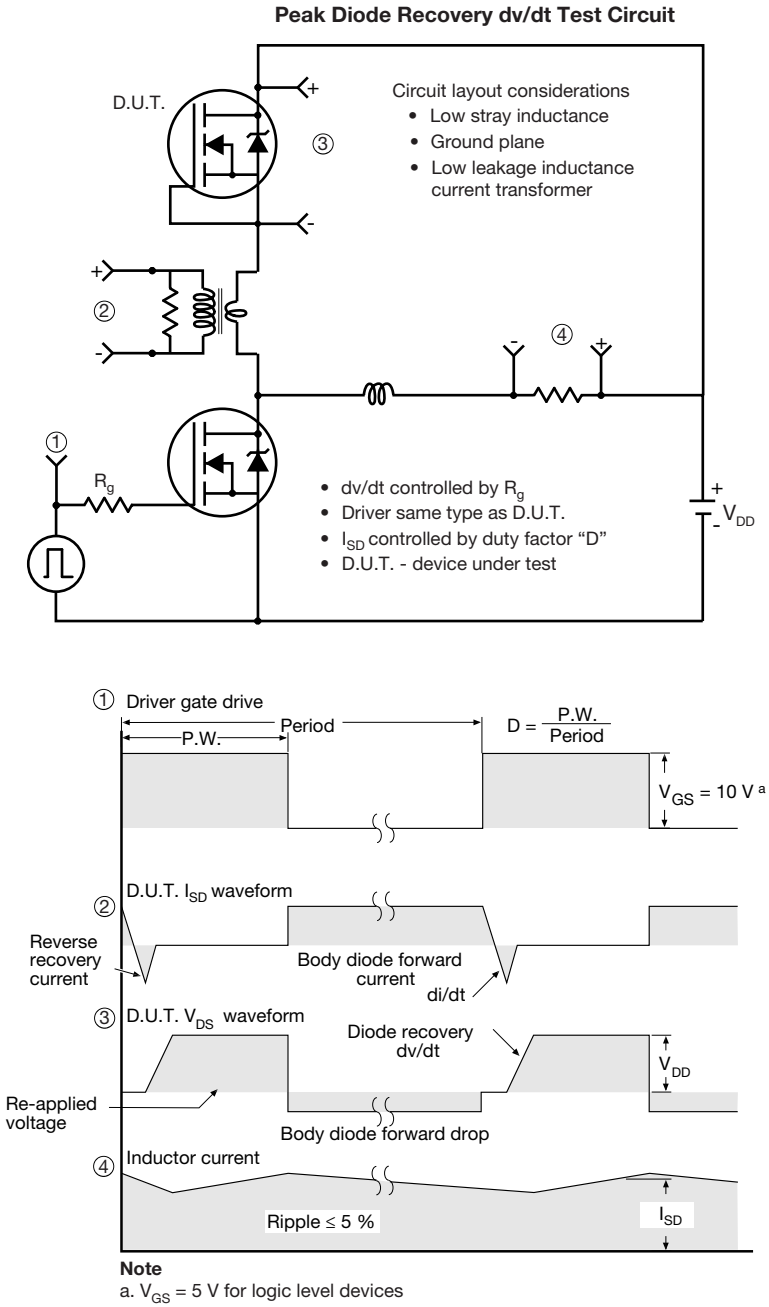

Note

a. V_{GS} = 5 V for logic level devices

Fig. 19 - For N-Channel

THIS DOCUMENT IS SUBJECT TO CHANGE WITHOUT NOTICE. THE PRODUCTS DESCRIBED HEREIN AND THIS DOCUMENT ARE SUBJECT TO SPECIFIC DISCLAIMERS, SET FORTH AT www.vishay.com/doc?91000

TO-220 FULLPAK Thin Lead

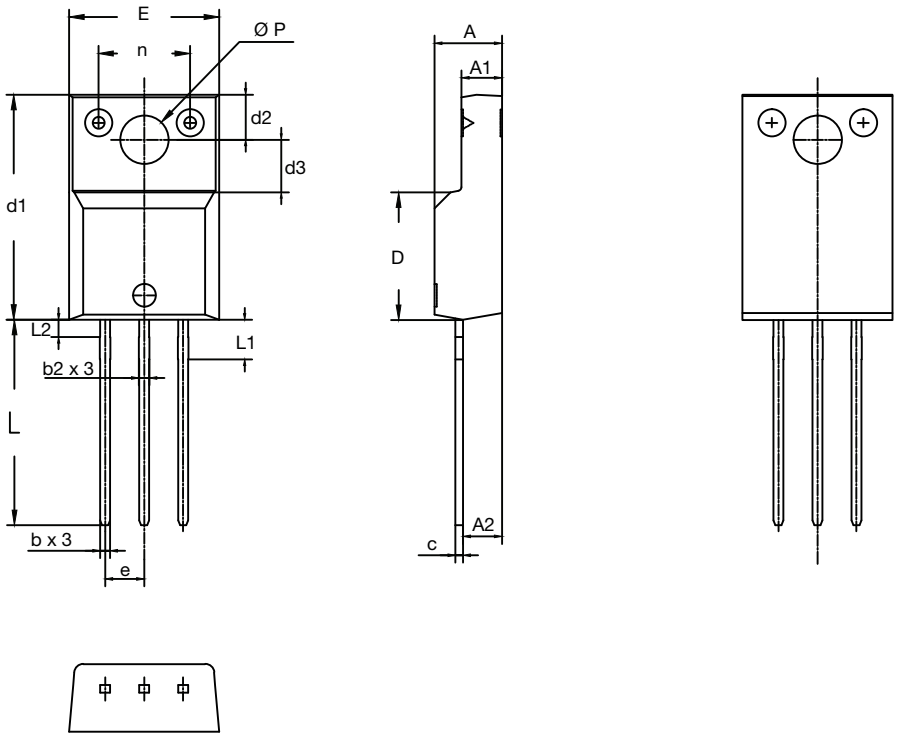

SYMBOL	DIMENSIONS			
	MILLIMETERS		INCHES	
	MIN.	MAX.	MIN.	MAX.
A	4.30	4.70	0.169	0.185
A1	2.50	2.90	0.098	0.114
A2	2.50	2.70	0.098	0.106
b	0.60	0.80	0.024	0.031
b2	0.60	0.90	0.024	0.035
c	-	0.60	-	0.024
D	8.30	8.70	0.327	0.342
d1	14.70	15.30	0.579	0.602
d2	2.90	3.10	0.114	0.122
d3	3.40	3.60	0.134	0.142
E	9.70	10.30	0.382	0.406
e	2.50	2.70	0.098	0.106
L	13.40	13.80	0.528	0.543
L1	2.50	2.80	0.098	0.110
L2	-	1.20	-	0.047
n	6.05	6.15	0.238	0.242
Ø P	3.00	3.40	0.118	0.134
ECN: T16-0549-Rev. C, 12-Sep-16 DWG: 6021				

THIS DOCUMENT IS SUBJECT TO CHANGE WITHOUT NOTICE. THE PRODUCTS DESCRIBED HEREIN AND THIS DOCUMENT ARE SUBJECT TO SPECIFIC DISCLAIMERS, SET FORTH AT www.vishay.com/doc?91000

Disclaimer

ALL PRODUCT, PRODUCT SPECIFICATIONS AND DATA ARE SUBJECT TO CHANGE WITHOUT NOTICE TO IMPROVE RELIABILITY, FUNCTION OR DESIGN OR OTHERWISE.

Vishay Intertechnology, Inc., its affiliates, agents, and employees, and all persons acting on its or their behalf (collectively, “Vishay”), disclaim any and all liability for any errors, inaccuracies or incompleteness contained in any datasheet or in any other disclosure relating to any product.

Vishay makes no warranty, representation or guarantee regarding the suitability of the products for any particular purpose or the continuing production of any product. To the maximum extent permitted by applicable law, Vishay disclaims (i) any and all liability arising out of the application or use of any product, (ii) any and all liability, including without limitation special, consequential or incidental damages, and (iii) any and all implied warranties, including warranties of fitness for particular purpose, non-infringement and merchantability.

Statements regarding the suitability of products for certain types of applications are based on Vishay’s knowledge of typical requirements that are often placed on Vishay products in generic applications. Such statements are not binding statements about the suitability of products for a particular application. It is the customer’s responsibility to validate that a particular product with the properties described in the product specification is suitable for use in a particular application. Parameters provided in datasheets and / or specifications may vary in different applications and performance may vary over time. All operating parameters, including typical parameters, must be validated for each customer application by the customer’s technical experts. Product specifications do not expand or otherwise modify Vishay’s terms and conditions of purchase, including but not limited to the warranty expressed therein.

Except as expressly indicated in writing, Vishay products are not designed for use in medical, life-saving, or life-sustaining applications or for any other application in which the failure of the Vishay product could result in personal injury or death. Customers using or selling Vishay products not expressly indicated for use in such applications do so at their own risk. Please contact authorized Vishay personnel to obtain written terms and conditions regarding products designed for such applications.

No license, express or implied, by estoppel or otherwise, to any intellectual property rights is granted by this document or by any conduct of Vishay. Product names and markings noted herein may be trademarks of their respective owners.

© 2019 VISHAY INTERTECHNOLOGY, INC. ALL RIGHTS RESERVED

ENTEGRECİ

Bu belge www.entegreci.com üzerinden sunulmaktadır.

Elektronik komponent tedarikinde Entegreci

Entegreci, Eskişehir merkezli, Türkiye geneline satış yapan bir elektronik komponent mağazasıdır. Entegreler (IC), mikrodenetleyiciler, transistörler, diyotlar, pasif elemanlar, konnektörler, modüller ve geliştirme kartları tek adetten seri üretim adetlerine kadar satılır. Ürün sayfalarında güncel stok durumunu, fiyatı ve datasheet bağlantısını bulabilirsiniz.

Parça koduyla arama

Üretici parça numarasını yazın; stok ve fiyatı hemen görün.

www.entegreci.com

Ürün kategorileri

Entegreden kapasitöre tüm elektronik komponent kategorileri.

Kategorilere göz atın

Üreticiler

Aradığınız üreticinin ürünlerini tek sayfada inceleyin.

Üreticileri görün

Toplu alım ve teklif

Listede olmayan ya da yüksek adetli parçalar için teklif isteyin.

Teklif isteyin

www.entegreci.com | **destek@entegreci.com** | **0850 305 90 34**

Entegreci is an online electronic components store based in Türkiye. Search by manufacturer part number to see stock, prices and datasheets for integrated circuits, microcontrollers, transistors, passive components and connectors, or request a quote for parts that are not listed.

Bu sayfa Entegreci tarafından eklenmiştir. Belgenin önceki sayfaları asıl yayıncısına aittir ve içeriği değiştirilmemiştir; en güncel sürüm için belgenin yayıncısına başvurun.