Off-Line PWM Controllers with Integrated Power MOSFET

STR6A100HZ Series

Data Sheet

Description

The STR6A100HZ series are power ICs for switching power supplies, incorporating a MOSFET and a current mode PWM controller IC.

To enhance efficiency in all load ranges, the IC automatically shifts its operation to the green mode or burst oscillation mode, depending on the load.

The product achieves high cost-performance power supply systems with few external components.

Features

- Improving circuit efficiency (Since the step drive control can keep V_{RM} of secondary rectification diodes low, the circuit efficiency can be improved by low V_F)
- Current Mode Type PWM Control
- Brown-in and Brown-out Function
- No Load Power Consumption, P_{IN} < 25mW
- Automatically changed operation mode in response to load conditions
  - Fixed switching frequency mode, 100 kHz (typ.) in normal operation.
  - Green mode, 25 kHz (typ.) to 100 kHz (typ.) in middle to light load.
  - Burst oscillation mode in light load.
- Random Switching Function
- Slope Compensation Function
- Leading Edge Blanking Function
- Bias Assist Function
- Protections
  - Two Types of Overcurrent Protection (OCP): Pulse-by-Pulse, built-in compensation circuit to minimize OCP point variation on AC input voltage
  - Overload Protection with timer (OLP): Ato restart
  - Overvoltage Protection (OVP): Latch shutdown
  - Thermal Shutdown (TSD): Latch shutdown

Typical Application

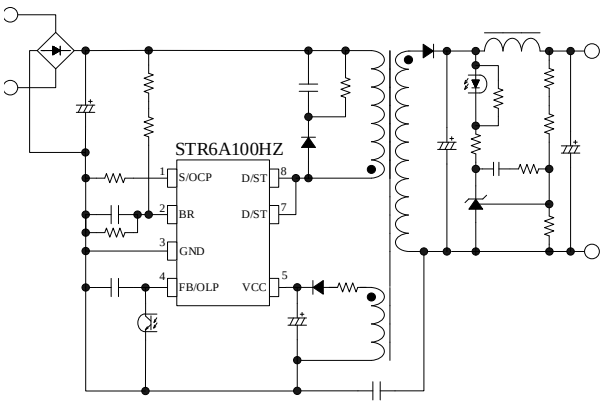

Package

DIP8



Not to Scale.

Selection Guide

- Electrical Characteristics
  $f_{OSC(AVG)}$ = 100 kHz

Products	MOSFET	
	V_{DSS}(min.)	$R_{DS(ON)}$(max.)
STR6A169HZ	700 V	6.0 Ω
STR6A161HZ		3.95 Ω
STR6A163HZ		2.3 Ω

- Output Power, P_{OUT}*

Products	Adapter		Open frame	
	AC230V	AC85 ~265V	AC230V	AC85 ~265V
STR6A169HZ	17 W	11 W	30 W	19.5 W
STR6A161HZ	20.5 W	15 W	35 W	23.5 W
STR6A163HZ	25 W	20 W	40 W	28 W

* The output power is actual continues power that is measured at 50 °C ambient. The peak output power can be 120 to 140 % of the value stated here. Core size, ON Duty, and thermal design affect the output power. It may be less than the value stated here.

Application

- Large Home Appliance
- Office Automation Equipment
- Audiovisual Equipment
- Industrial Equipment
- Other SMPSs (Switching Mode Power Supplies)

© SANKEN ELECTRIC CO., LTD. 2014

CONTENTS

Description ---- 1

1. Absolute Maximum Ratings ---- 3

2. Electrical Characteristics ---- 4

3. Performance Curves ---- 6
   3.1. Derating Curves ---- 6
   3.2. MOSFET Safe Operating Area Curves ---- 7
   3.3. Ambient Temperature versus Power Dissipation Curve ---- 7
   3.4. Transient Thermal Resistance Curves ---- 8

4. Block Diagram ---- 9

5. Pin Configuration Definitions ---- 9

6. Typical Application ---- 10

7. External Dimensions ---- 11

8. Marking Diagram ---- 11

9. Operational Description ---- 12
   9.1. Startup Operation ---- 12
      9.1.1. Without Brown-In / Brown-Out Function ---- 12
      9.1.2. With Brown-In / Brown-Out Function ---- 12
   9.2. Undervoltage Lockout (UVLO) ---- 13
   9.3. Bias Assist Function ---- 13
   9.4. Soft Start Function ---- 13
   9.5. Constant Output Voltage Control ---- 14
   9.6. Leading Edge Blanking Function ---- 15
   9.7. Random Switching Function ---- 15
   9.8. Step Drive Control ---- 15
   9.9. Operation Mode ---- 15
   9.10. Brown-In and Brown-Out Function ---- 16
      9.10.1. DC Line Detection ---- 16
      9.10.2. AC Line Detection ---- 17
   9.11. Overcurrent Protection (OCP) ---- 17
      9.11.1. Overcurrent Protection Operation ---- 17
      9.11.2. Input Compensation Function ---- 18
   9.12. Overload Protection (OLP) ---- 18
   9.13. Overvoltage Protection (OVP) ---- 19
   9.14. Thermal Shutdown (TSD) ---- 19

10. Design Notes ---- 19
   10.1. External Components ---- 19
      10.1.1. Input and Output Electrolytic Capacitor ---- 20
      10.1.2. S/OCP Pin Peripheral Circuit ---- 20
      10.1.3. BR Pin peripheral circuit ---- 20
      10.1.4. FB/OLP Pin Peripheral Circuit ---- 20
      10.1.5. VCC Pin Peripheral Circuit ---- 20
      10.1.6. Snubber Circuit ---- 20
      10.1.7. Phase Compensation ---- 20
      10.1.8. Transformer ---- 21
   10.2. PCB Trace Layout and Component Placement ---- 21

11. Pattern Layout Example ---- 23

12. Reference Design of Power Supply ---- 24

IMPORTANT NOTES ---- 26

© SANKEN ELECTRIC CO., LTD. 2014

1. Absolute Maximum Ratings

- Current polarities are defined as follows: current going into the IC (sinking) is positive current (+); current coming out of the IC (sourcing) is negative current (−).
- Unless specifically noted, T_A = 25°C, 7 pin and 8 pin are shorted.

Parameter	Symbol	Conditions	Pins	Rating	Units	Remarks
Drain Peak Current (1)	I_{DPEAK}	Single pulse	8 − 1	1.8	A	STR6A169HZ
				2.5		STR6A161HZ
				4.0		STR6A163HZ
Maximum Switching Current (2)	I_{DMAX}	T_A = − 40 ~ 125 °C	8 − 1	1.8	A	STR6A169HZ
				2.5		STR6A161HZ
				4.0		STR6A163HZ
Avalanche Energy (3)(4)	E_{AS}	I_{LPEAK}=1.8A	8 − 1	24	mJ	STR6A169HZ
		I_{LPEAK}=1.78A		36		STR6A161HZ
		I_{LPEAK}=2.15A		53		STR6A163HZ
S/OCP Pin Voltage	$V_{S/OCP}$		1 − 3	− 2 to 6	V	
BR Pin Voltage	V_{BR}		2 − 3	− 0.3 to 7.5	V	
BR Pin Sink Current	I_{BR}		2 − 3	1.0	mA	
FB/OLP Pin Voltage	V_{FB}	$I_{FB} \leq$ 1mA	4 − 3	− 0.3 to 14	V	
FB/OLP Pin Sink Current	I_{FB}		4 − 3	1.0	mA	
VCC Pin Voltage	V_{CC}		5 − 3	−0.3 to 32	V	
D/ST Pin Voltage	$V_{D/ST}$		8 − 3	− 1 to V_{DSS}	V	
MOSFET Power Dissipation(5)	P_{D1}	(6)	8 − 1	1.35	W	
Control Part Power Dissipation	P_{D2}		5 − 3	1.2	W	
Operating Ambient Temperature	T_{OP}		−	− 40 to 125	°C	
Storage Temperature	T_{STG}		−	− 40 to 125	°C	
Junction Temperature	T_J		−	150	°C	

(1) See Section 3.2.
(2) The Maximum Switching Current is the drain current determined by the drive voltage of the IC and threshold voltage of the MOSFET, $V_{GS(TH)}$.
(3) See Figure 3-2.
(4) Single pulse, V_{DD} = 99 V, L = 20 mH.
(5) See 3.3, Ambient Temperature versus Power Dissipation Curve.
(6) When embedding this hybrid IC onto the printed circuit board (copper area in a 15 mm × 15 mm).

© SANKEN ELECTRIC CO., LTD. 2014

2. Electrical Characteristics

- Current polarities are defined as follows: a current flow going into the IC (sinking) is positive current (+); and a current flow coming out of the IC (sourcing) is negative current (−).
- Unless specifically noted, T_A = 25°C, 7 pin and 8 pin are shorted.

Parameter	Symbol	Conditions	Pins	Min.	Typ.	Max.	Units	Remarks
Power Supply Startup Operation								
Operation Start Voltage	$V_{CC(ON)}$		5 − 3	13.8	15.0	16.2	V	
Operation Stop Voltage(*)	$V_{CC(OFF)}$		5 − 3	7.6	8.5	9.2	V	
Circuit Current in Operation	$I_{CC(ON)}$	V_{CC} = 12 V	5 − 3	−	1.5	3.0	mA	
Startup Circuit Operation Voltage	$V_{ST(ON)}$		8 – 3	40	47	55	V	
Startup Current	$I_{CC(ST)}$	V_{CC} = 13.5 V $V_{D/ST}$ = 100 V	5 − 3	−4.05	−2.50	−1.08	mA	
Startup Current Biasing Threshold Voltage	$V_{CC(BIAS)}$	I_{CC} = −500 µA	5 − 3	8.0	9.6	10.5	V	
Normal Operation								
Average Switching Frequency	$f_{OSC(AVG)}$		8 – 3	90	100	110	kHz	
Switching Frequency Modulation Deviation	Δf		8 − 3	−	8.4	−	kHz	
Maximum Feedback Current	$I_{FB(MAX)}$	V_{CC} = 12 V	4 − 3	−170	−130	−85	µA	
Minimum Feedback Current	$I_{FB(MIN)}$		4 − 3	−21	−13	−5	µA	
Light Load Operation								
FB/OLP Pin Starting Voltage of Frequency Decreasing	$V_{FB(FDS)}$	$f_{OSC(AVG)}$× 0.9	1 − 8	2.88	3.60	4.32	V	
FB/OLP Pin Ending Voltage of Frequency Decreasing	$V_{FB(FDE)}$	$f_{OSC(MIN)}$× 1.1	1 − 8	2.48	3.10	3.72	V	
Minimum Switching Frequency	$f_{OSC(MIN)}$		5 − 8	18	25	32	kHz	
Standby Operation								
FB/OLP Pin Oscillation Stop Threshold Voltage	$V_{FB(OFF)}$		4 − 3	1.61	1.77	1.92	V	
Brown-In / Brown-Out Function								
Brown-In Threshold Voltage	$V_{BR(IN)}$		2 – 3	5.43	5.60	5.77	V	
Brown-Out Threshold Voltage	$V_{BR(OUT)}$		2 − 3	4.65	4.80	4.95	V	
BR Pin Clamp Voltage	$V_{BR(CLAMP)}$	I_{BR} = 100 µA	2 − 3	6.5	6.9	7.3	V	
BR Function Disabling Threshold Voltage	$V_{BR(DIS)}$		2 − 3	0.4	0.6	0.8	V	
Protection								
Maximum ON Duty	D_{MAX}		8 − 3	70	75	80	%	
Leading Edge Blanking Time	t_{BW}		−	−	330	−	ns	
OCP Compensation Coefficient	DPC		−	−	25.8	−	mV/µs	
OCP Compensation ON Duty	D_{DPC}		−	−	36	−	%	

(*) $V_{CC(BIAS)} > V_{CC(OFF)}$ always.

© SANKEN ELECTRIC CO., LTD. 2014

Parameter	Symbol	Conditions	Pins	Min.	Typ.	Max.	Units	Remarks
OCP Threshold Voltage at Zero ON Duty	$V_{OCP(L)}$		1 − 3	0.735	0.795	0.855	V	
OCP Threshold Voltage at 36% ON Duty	$V_{OCP(H)}$		1 − 3	0.843	0.888	0.933	V	
OCP Threshold Voltage in Leading Edge Blanking Time	$V_{OCP(LEB)}$		1 − 3	−	1.69	−	V	
OLP Threshold Voltage	$V_{FB(OLP)}$		4 − 3	6.8	7.3	7.8	V	
OLP Delay Time	t_{OLP}		4 − 3	55	75	90	ms	
OLP Operation Current	$I_{CC(OLP)}$		5 − 3	−	260	−	µA	
FB/OLP Pin Clamp Voltage	$V_{FB(CLAMP)}$		4 − 3	10.5	11.8	13.5	V	
OVP Threshold Voltage	$V_{CC(OVP)}$		5 − 3	27.0	29.1	31.2	V	
Thermal Shutdown Operating Temperature	$T_{J(TSD)}$		−	125	145	−	°C	
MOSFET								
Drain-to-Source Breakdown Voltage	V_{DSS}	I_{DS} = 300 µA	8 − 1	700	−	−	V	
Drain Leakage Current	I_{DSS}	V_{DS} = 700 V	8 − 1	−	−	300	µA	
On-Resistance	$R_{DS(ON)}$	I_{DS} = 0.4 A	8 − 1	−	−	6.0	Ω	STR6A169HZ
				−	−	3.95	Ω	STR6A161HZ
				−	−	2.3	Ω	STR6A163HZ
Switching Time	t_f		8 − 1	−	−	250	ns	
Thermal Resistance								
Channel to Case	θ_{ch-C}		−	−	−	22	°C/W	

© SANKEN ELECTRIC CO., LTD. 2014

3. Performance Curves

3.1. Derating Curves

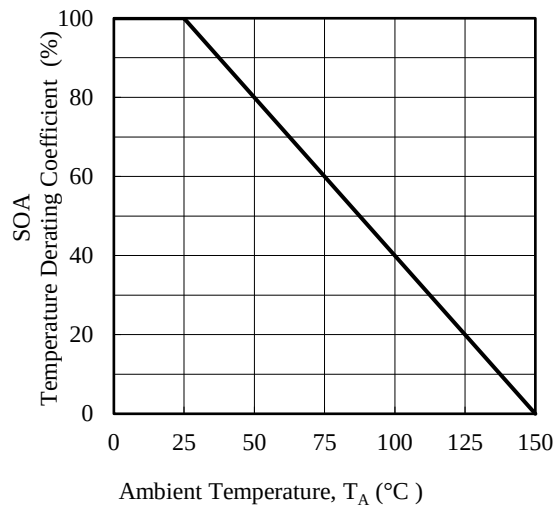

Figure 3-1 SOA Temperature Derating Coefficient Curve

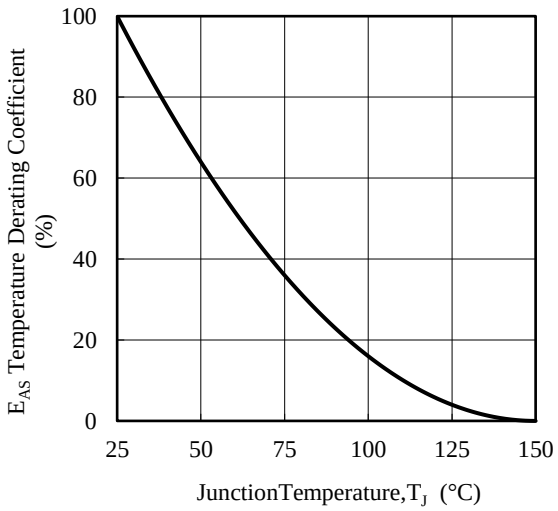

Figure 3-2 Avalanche Energy Derating Coefficient Curve

© SANKEN ELECTRIC CO., LTD. 2014

3.2. MOSFET Safe Operating Area Curves

- When the IC is used, the safe operating area curve should be multiplied by the temperature derating coefficient derived from Figure 3-1.
- The broken line in the safe operating area curve is the drain current curve limited by on-resistance.
- Unless otherwise specified, T_A = 25 °C, Single pulse.

● STR6A161HZ

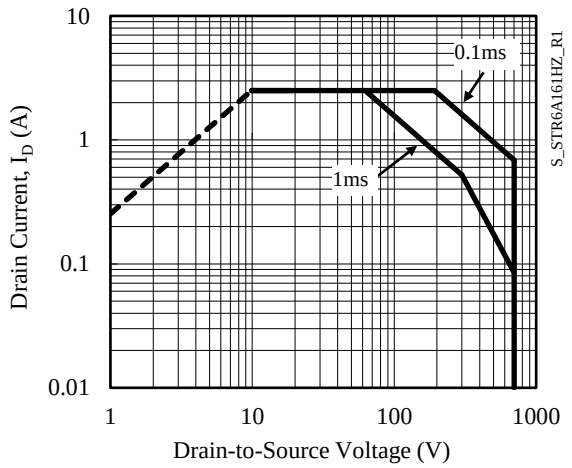

● STR6A163HZ

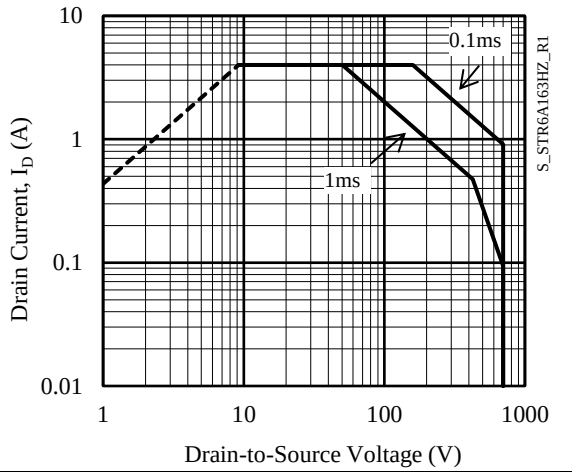

● STR6A169HZ

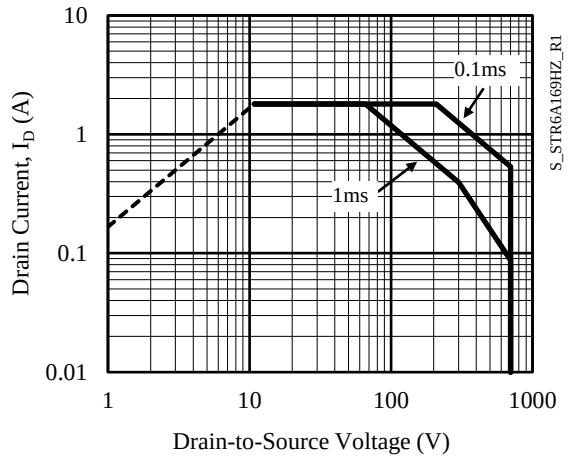

3.3. Ambient Temperature versus Power Dissipation Curve

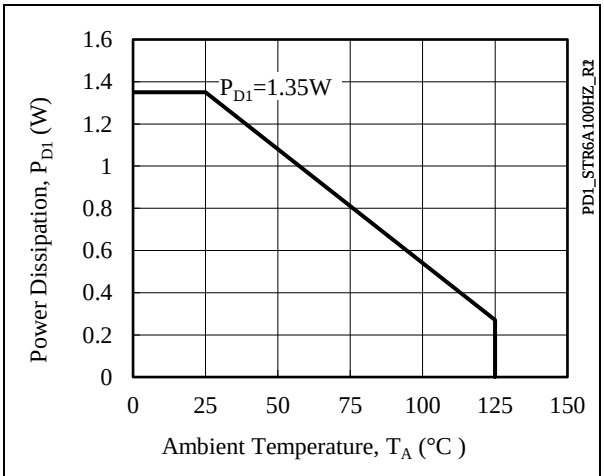

© SANKEN ELECTRIC CO., LTD. 2014

3.4. Transient Thermal Resistance Curves

● STR6A161HZ

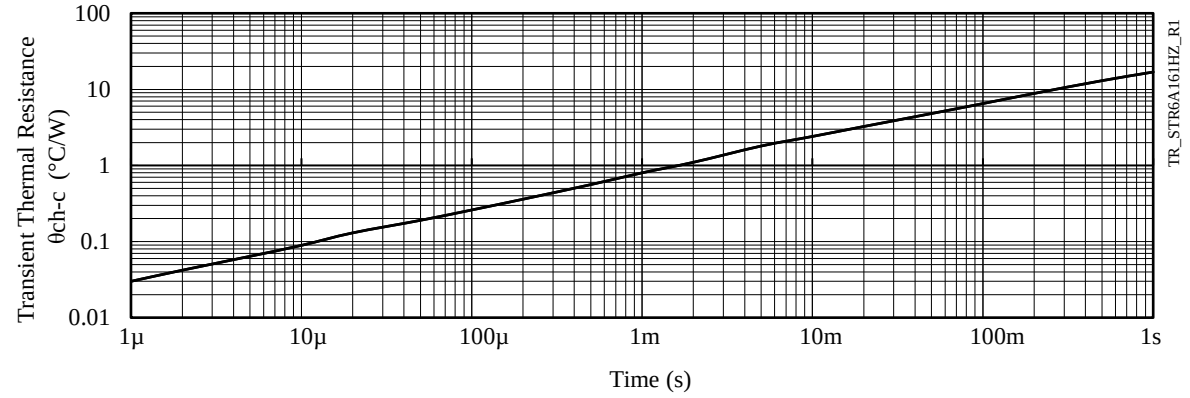

● STR6A163HZ

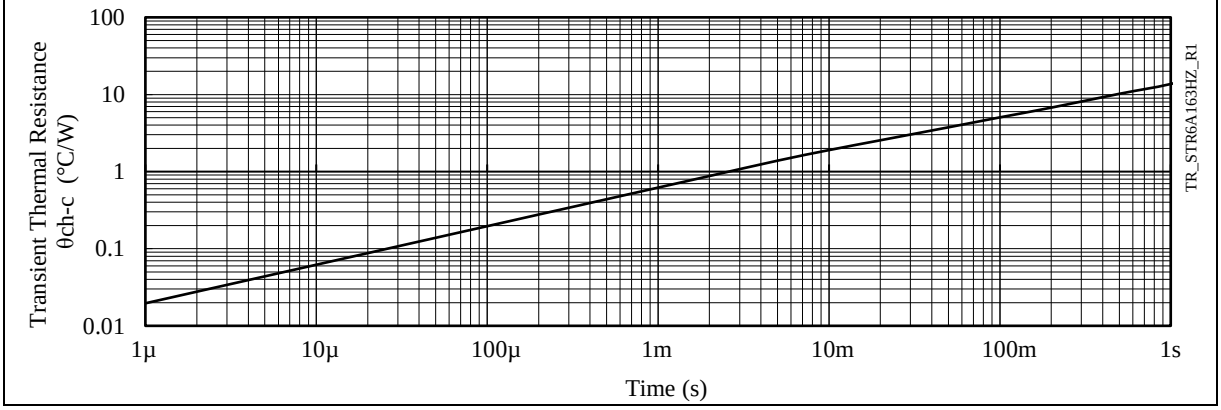

● STR6A169HZ

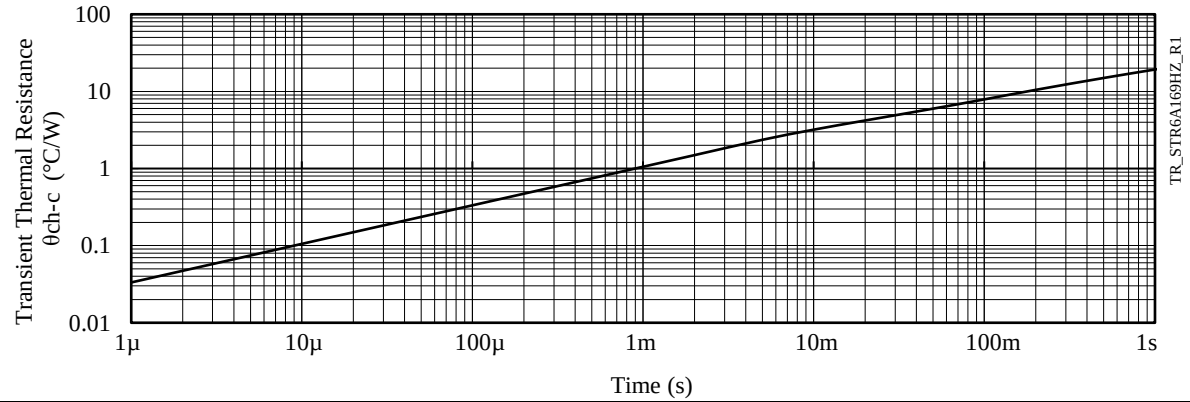

© SANKEN ELECTRIC CO., LTD. 2014

4. Block Diagram

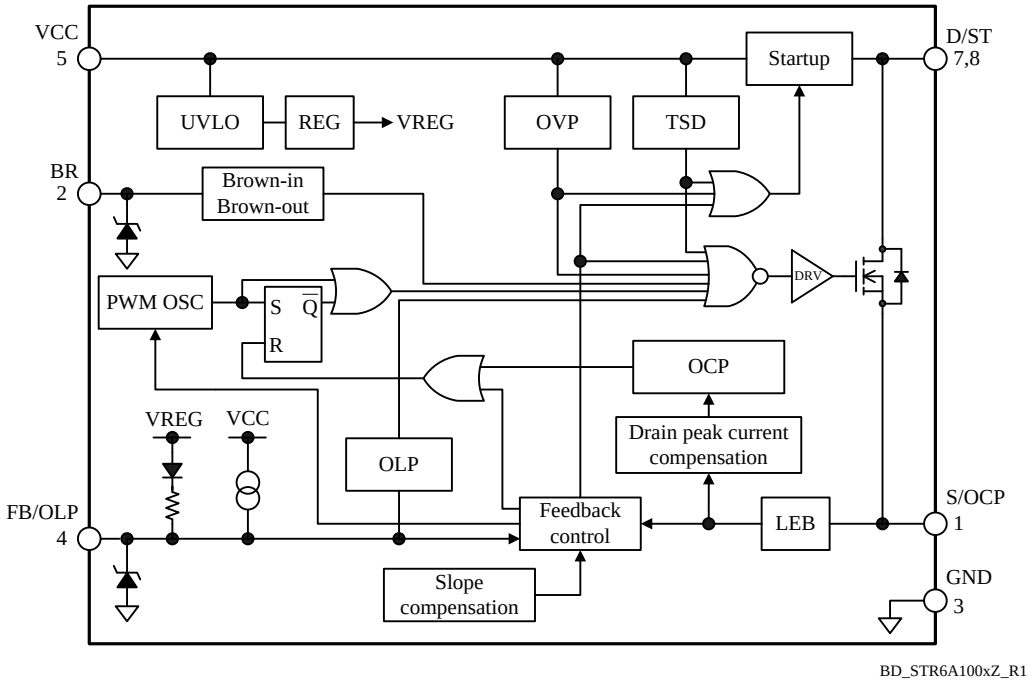

5. Pin Configuration Definitions

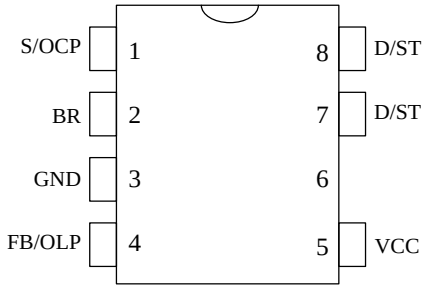

Pin Number	Pin Name	Descriptions
1	S/OCP	MOSFET source; OCP signal input
2	BR	Brown-in and brown-out detection voltage input
3	GND	Ground
4	FB/OLP	Constant voltage control signal input; OLP signal input
5	VCC	Logic power supply voltage input; OVP signal input
6	–	(Pin removed)
7	D/ST	MOSFET drain; startup current input
8		

© SANKEN ELECTRIC CO., LTD. 2014

6. Typical Application

- The following drawings show circuits enabled and disabled the Brown-In/Brown-Out Function.
- The PCB traces of the D/ST pins should be as wide as possible, in order to enhance thermal dissipation.
- In applications having a power supply specified such that the D/ST pins have large transient surge voltages, a clamp snubber circuit of a capacitor-resistor-diode (CRD) combination should be added on the primary winding P, or a damper snubber circuit of a capacitor (C) or a resistor-capacitor (RC) combination should be added between the D/ST pin and the S/OCP pin.

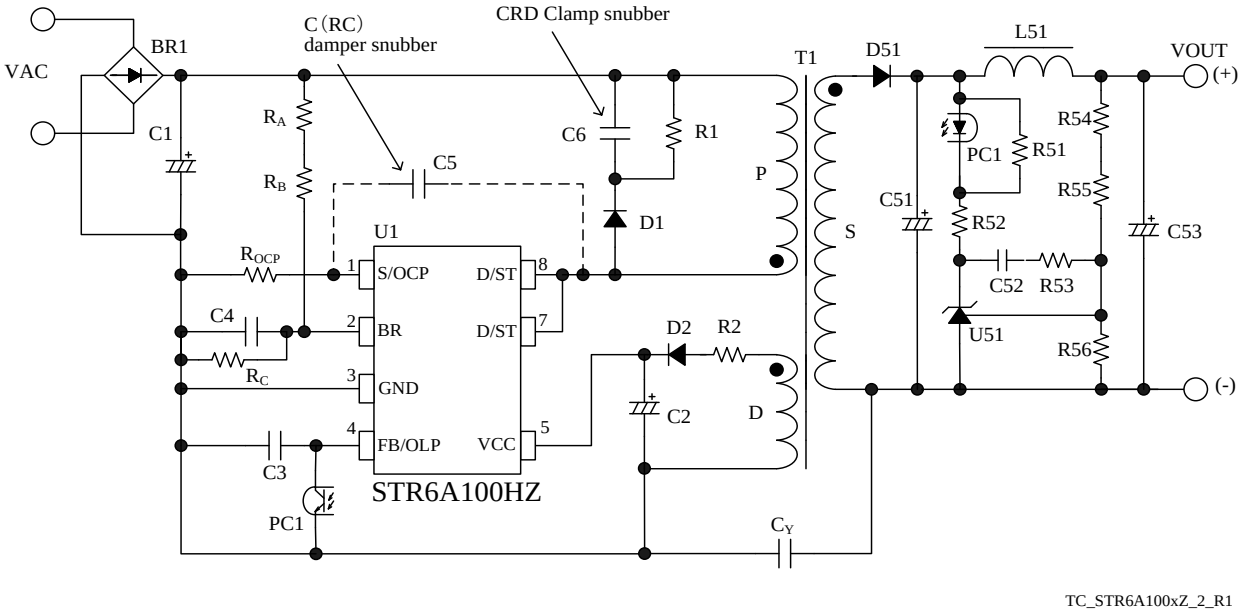

Figure6-1 Typical Application (Enabled Brown-in/Brown-out Function, DC Line Detection)

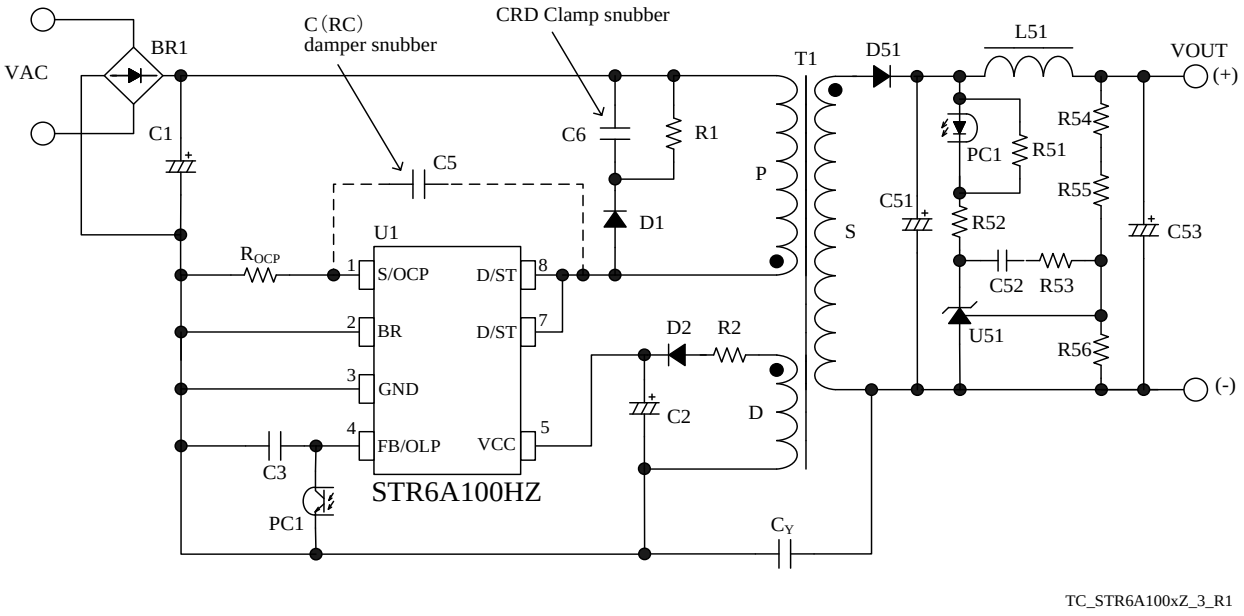

Figure6-2 Typical Application (Disabled Brown-in/Brown-out Function)

© SANKEN ELECTRIC CO., LTD. 2014

7. External Dimensions

● DIP8

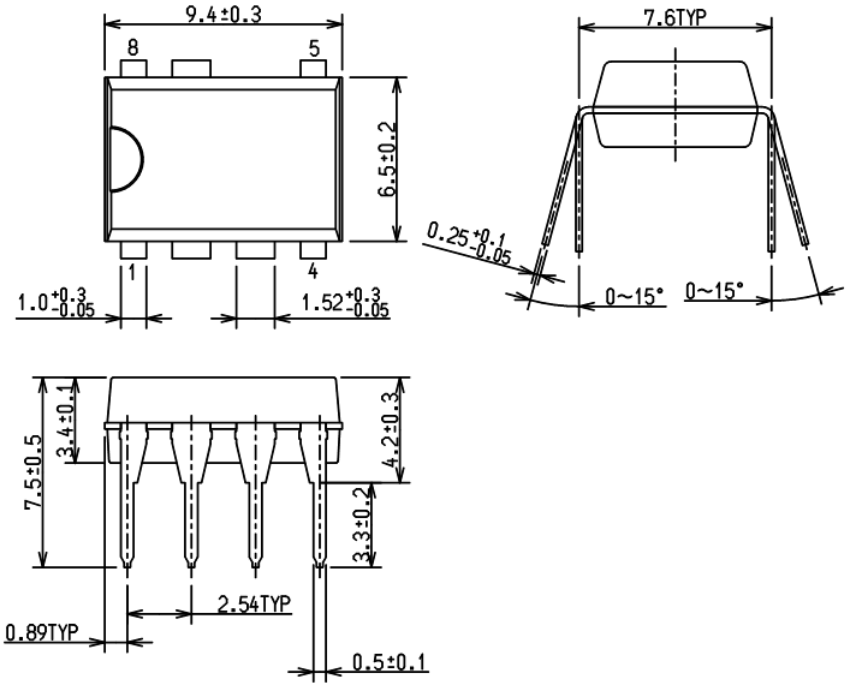

NOTES:
1) Dimension is in millimeters
2) Pb-free. Device composition compliant with the RoHS directive

8. Marking Diagram

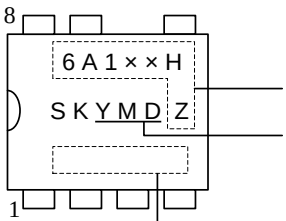

Part Number

Lot Number

Y is the last digit of the year of manufacture (0 to 9)

M is the month of the year (1 to 9, O, N or D)

D is a period of days,

1 : 1st to 10th

2 : 11th to 20th

3 : 21st to 31st

Control Number

© SANKEN ELECTRIC CO., LTD. 2014

9. Operational Description

All the characteristic values given in this section are typical values, unless they are specified as minimum or maximum.

Current polarities are defined as follows: a current flow going into the IC (sinking) is positive current (+); and a current flow coming out of the IC (sourcing) is negative current (−).

9.1. Startup Operation

Figure 9-1 shows the circuit around IC.

The IC incorporates the startup circuit. The circuit is connected to D/ST pin. When D/ST pin voltage reaches to Startup Circuit Operation Voltage $V_{ST(ON)}$ = 47 V, the startup circuit starts operation.

During the startup process, the constant current, $I_{CC(ST)}$ = −2.50 mA, charges C2 at VCC pin. When VCC pin voltage increases to $V_{CC(ON)}$ = 15.0 V, the control circuit starts operation. During the IC operation, the voltage rectified the auxiliary winding voltage, V_D, of Figure 9-1 becomes a power source to the VCC pin. After switching operation begins, the startup circuit turns off automatically so that its current consumption becomes zero.

The approximate value of auxiliary winding voltage is about 15 V to 20 V, taking account of the winding turns of D winding so that VCC pin voltage becomes Equation (1) within the specification of input and output voltage variation of power supply.

$$V_{CC(BIAS)}(\text{max.}) < V_{CC} < V_{CC(OVP)}(\text{min.})$$

$$\Rightarrow 10.5\ (\text{V}) < V_{CC} < 27.0\ (\text{V}) \quad (1)$$

The oscillation start timing of IC depends on Brown-In / Brown-Out Function (See Section 9.10).

9.1.1. Without Brown-In / Brown-Out Function (BR pin voltage is $V_{BR(DIS)}$ = 0.6 V or less)

When VCC pin voltage increases to $V_{CC(ON)}$, the IC starts switching operation, As shown in Figure 9-2.

The startup time of IC is determined by C2 capacitor value. The approximate startup time t_{START} (shown in Figure 9-2) is calculated as follows:

$$t_{START} = C2 \sim \frac{V_{CC(ON)} - V_{CC(INT)}}{|I_{CC(ST)}|} \quad (2)$$

where,

t_{START} : Startup time of IC (s)

$V_{CC(INT)}$: Initial voltage on VCC pin (V)

9.1.2. With Brown-In / Brown-Out Function

When BR pin voltage is more than $V_{BR(DIS)}$ = 0.6 V and less than $V_{BR(IN)}$ = 5.60 V, the Bias Assist Function (see Section 9.3) is disabled. Thus, VCC pin voltage repeats increasing to $V_{CC(ON)}$ and decreasing to $V_{CC(OFF)}$ (shown in Figure 9-3). When BR pin voltage becomes $V_{BR(IN)}$ or more, the IC starts switching operation.

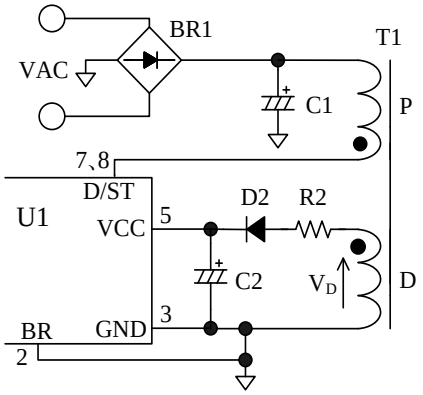

Figure 9-1 VCC Pin and Its Peripheral Circuit (Without Brown-in /Brown-out)

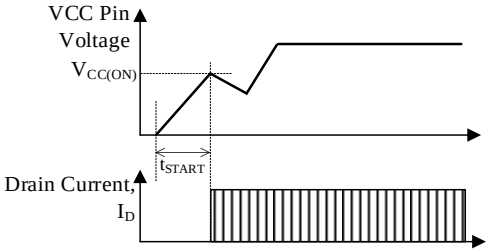

Figure 9-2 Operational Waveforms at Startup Operation (Without Brown-in /Brown-out)

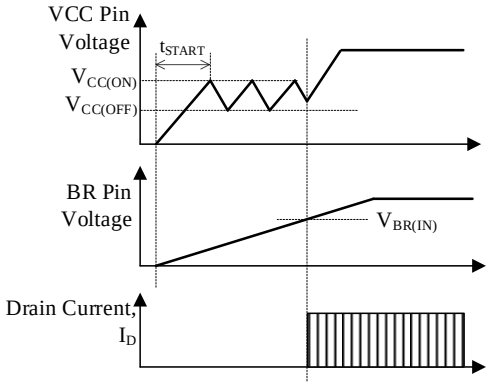

Figure 9-3 Operational Waveforms at Startup Operation (With Brown-in / Brown-out)

© SANKEN ELECTRIC CO., LTD. 2014

9.2. Undervoltage Lockout (UVLO)

Figure 9-4 shows the relationship of VCC pin voltage and circuit current I_{CC}. When VCC pin voltage decreases to $V_{CC(OFF)}$ = 8.5 V, the control circuit stops operation by Undervoltage Lockout (UVLO) circuit, and reverts to the state before startup.

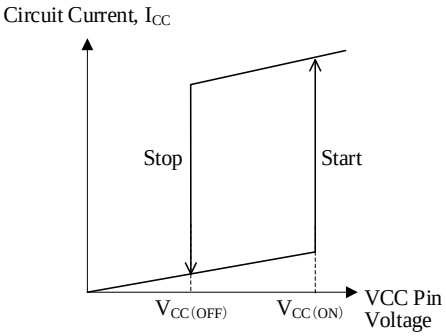

Figure 9-4 Relationship between VCC Pin Voltage and I_{CC}

9.3. Bias Assist Function

By the Bias Assist Function, the startup failure is prevented. The Bias Assist Function is activated, in both of following condition:

the FB pin voltage is FB/OLP Pin Oscillation Stop Threshold Voltage, $V_{FB(OFF)}$= 1.77 V or less

and the VCC voltage decreases to the Startup Current Biasing Threshold Voltage, $V_{CC(BIAS)}$ = 9.6 V.

When the Bias Assist Function is activated, the VCC pin voltage is kept almost constant voltage, $V_{CC(BIAS)}$ by providing the startup current, $I_{CC(ST)}$, from the startup circuit. Thus, the VCC pin voltage is kept more than $V_{CC(OFF)}$.

Since the startup failure is prevented by the Bias Assist Function, the value of C2 connected to VCC pin can be small. Thus, the startup time and the response time of the OVP become shorter.

The operation of the Bias Assist Function in startup is as follows. It is necessary to check and adjust the startup process based on actual operation in the application, so that poor starting conditions may be avoided.

Figure 9-5 shows VCC pin voltage behavior during the startup period.

After VCC pin voltage increases to $V_{CC(ON)}$ = 15.0 V at startup, the IC starts the operation. Then circuit current increases and VCC pin voltage decreases. At the same time, the auxiliary winding voltage V_D increases in proportion to output voltage. These are all balanced to produce VCC pin voltage.

When VCC pin voltage is decrease to $V_{CC(OFF)}$ = 8.5 V in startup operation, the IC stops switching operation and a startup failure occurs.

When the output load is light at startup, the output voltage may become more than the target voltage due to the delay of feedback circuit. In this case, the FB pin voltage is decreased by the feedback control. When the FB pin voltage decreases to $V_{FB(OFF)}$ or less, the IC stops switching operation and VCC pin voltage decreases. When VCC pin voltage decreases to $V_{CC(BIAS)}$, the Bias Assist Function is activated and the startup failure is prevented.

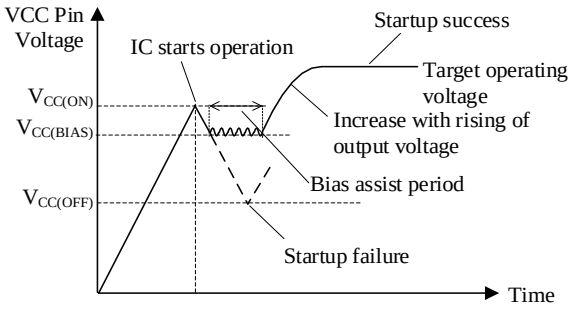

Figure 9-5 VCC Pin Voltage during Startup Period

9.4. Soft Start Function

Figure 9-6 shows the behavior of VCC pin voltage and drain current during the startup period.

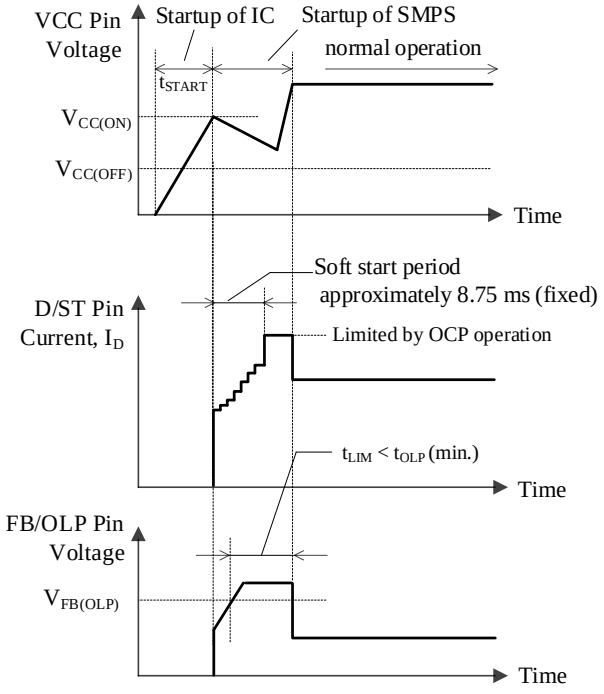

Figure 9-6 V_{CC} and I_D Waveforms during Startup

The IC activates the soft start circuitry during the startup period. Soft start time is fixed to around 8.75 ms. during the soft start period, over current threshold is increased step-wisely (7 steps). This function reduces

© SANKEN ELECTRIC CO., LTD. 2014

the voltage and the current stress of MOSFET and secondary side rectifier diode.

Since the Leading Edge Blanking Function (see Section 9.6) is deactivated during the soft start period, there is the case that ON time is less than the leading edge blanking time, t_{BW} = 330 ns.

After the soft start period, D/ST pin current, I_D, is limited by the Overcurrent Protection (OCP), until the output voltage increases to the target operating voltage. This period is given as t_{LIM}.

When t_{LIM} is longer than the OLP Delay Time, t_{OLP}, the output power is limited by the Overload Protection (OLP).

Thus, it is necessary to adjust the value of output capacitor and the turn ratio of auxiliary winding D so that the t_{LIM} is less than t_{OLP} = 55 ms (min.).

9.5. Constant Output Voltage Control

The IC achieves the constant voltage control of the power supply output by using the current-mode control method, which enhances the response speed and provides the stable operation.

The FB/OLP pin voltage is internally added the slope compensation at the feedback control (see Section 4.Functionnal Block Diagram), and the target voltage, V_{SC}, is generated. The IC compares the voltage, V_{ROCP}, of a current detection resistor with the target voltage, V_{SC}, by the internal FB comparator, and controls the peak value of V_{ROCP} so that it gets close to V_{SC}, as shown in Figure 9-7 and Figure 9-8.

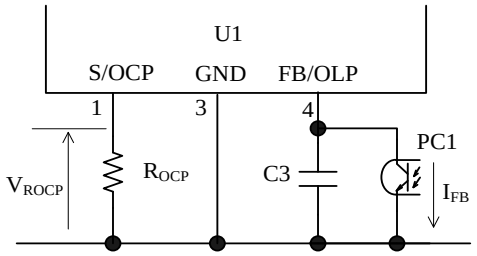

Figure 9-7 FB/OLP Pin Peripheral Circuit

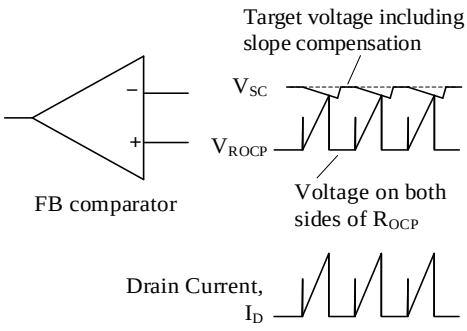

Figure 9-8 Drain Current, I_D, and FB Comparator Operation in Steady Operation

- Light load conditions
  When load conditions become lighter, the output voltage, V_{OUT}, increases. Thus, the feedback current from the error amplifier on the secondary-side also increases. The feedback current is sunk at the FB/OLP pin, transferred through a photo-coupler, PC1, and the FB/OLP pin voltage decreases. Thus, V_{SC} decreases, and the peak value of V_{ROCP} is controlled to be low, and the peak drain current of I_D decreases.
  This control prevents the output voltage from increasing.

- Heavy load conditions
  When load conditions become greater, the IC performs the inverse operation to that described above. Thus, V_{SC} increases and the peak drain current of I_D increases.
  This control prevents the output voltage from decreasing.

In the current mode control method, when the drain current waveform becomes trapezoidal in continuous operating mode, even if the peak current level set by the target voltage is constant, the on-time fluctuates based on the initial value of the drain current.

This results in the on-time fluctuating in multiples of the fundamental operating frequency as shown in Figure 9-9. This is called the subharmonics phenomenon.

In order to avoid this, the IC incorporates the Slope Compensation Function. Because the target voltage is added a down-slope compensation signal, which reduces the peak drain current as the on-duty gets wider relative to the FB/OLP pin signal to compensate V_{SC}, the subharmonics phenomenon is suppressed.

Even if subharmonic oscillations occur when the IC has some excess supply being out of feedback control, such as during startup and load shorted, this does not affect performance of normal operation.

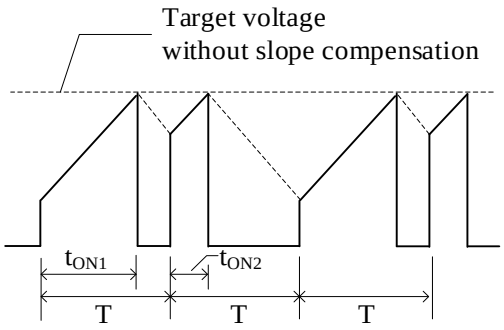

Figure 9-9 Drain Current, I_D, Waveform in Subharmonic Oscillation

© SANKEN ELECTRIC CO., LTD. 2014

9.6. Leading Edge Blanking Function

The constant voltage control of output of the IC uses the peak-current-mode control method.

In peak-current-mode control method, there is a case that the power MOSFET turns off due to unexpected response of FB comparator or Overcurrent Protection circuit (OCP) to the steep surge current in turning on a power MOSFET.

In order to prevent this response to the surge voltage in turning-on the power MOSFET, the Leading Edge Blanking, t_{BW} = 330 ns is built-in. During t_{BW}, the OCP threshold voltage becomes $V_{OCP(LEB)}$ = 1.69 V which is higher than the normal OCP threshold voltage (see Section 9.11).

9.7. Random Switching Function

The IC modulates its switching frequency randomly by superposing the modulating frequency on $f_{OSC(AVG)}$ in normal operation. This function reduces the conduction noise compared to others without this function, and simplifies noise filtering of the input lines of power supply.

9.8. Step Drive Control

Figure 9-10 shows a flyback control circuit. The both end of secondary rectification diode (D51) is generated surge voltage when a power MOSFET turns on. Thus, V_{RM} of D51 should be set in consideration of the surge.

The IC optimally controls the gate drive of the internal power MOSFET (Step drive control) depending on the load condition. The step drive control reduces the surge voltage of D51 when the power MOSFET turns on (See Figure 9-11). Since V_{RM} of D51 can be set to lower value than usual, the price reduction and the increasing circuit efficiency are achieved by using a diode of low V_F.

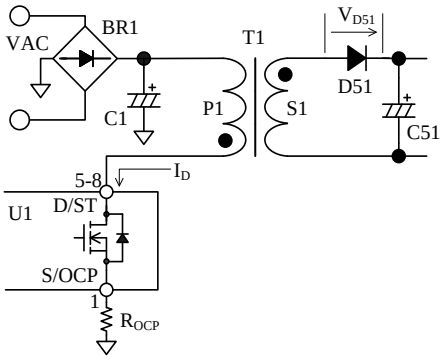

Figure 9-10 Flyback Control Circuit

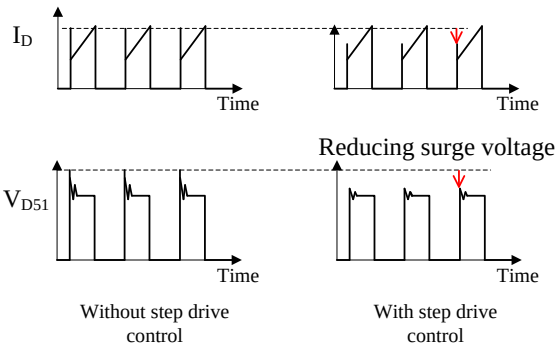

Figure 9-11 I_D and V_{D51} Waveforms

9.9. Operation Mode

As shown in Figure 9-12, when the output power is decreasing, together with the decrease of the drain current I_D of the internal power MOSFET, the operation mode is automatically changed to the fixed switching frequency mode (100 kHz), to the Green mode controlled the switching frequency (25 kHz to 100 kHz), and to the burst oscillation mode controlled by an internal oscillator. In the Green mode, the number of switching is reduced. In the burst oscillation mode, the switching operation is stopped during a constant period. Thus, the switching loss is reduced, and the power efficiency is improved.

When the output load becomes lower, FB/OLP pin voltage decreases. When FB/OLP pin voltage decreases to $V_{FB(FDS)}$ = 3.60 V or less, the green mode is activated and the oscillation frequency starts decreasing. When FB/OLP pin voltage becomes $V_{FB(FDE)}$ = 3.10 V, the oscillation frequency stops decreasing. At this point, the oscillation frequency becomes $f_{OSC(MIN)}$ = 25 kHz.

When FB/OLP pin voltage further decreases and becomes the standby operation point, the burst oscillation mode is activated. As shown in Figure 9-13, the burst oscillation mode consists of switching period and non-switching period. The oscillation frequency during switching period is the Minimum Frequency, $f_{OSC(MIN)}$ = 25 kHz.

Generally, to improve efficiency under light load conditions, the frequency of the burst mode becomes just a few kilohertz. Because the IC suppresses the peak drain current well during burst mode, audible noises can be reduced.

The OCP detection usually has some detection delay time. The higher the AC input voltage is, the steeper the slope of I_D is. Thus, the peak drain current at the burst oscillation mode becomes high at a high AC input voltage.

It is necessary to consider that the burst frequency becomes low at a high AC input.

If the VCC pin voltage decreases to $V_{CC(BIAS)}$ = 9.6 V during the transition to the burst mode, the Bias Assist function is activated and stabilizes the standby mode,

© SANKEN ELECTRIC CO., LTD. 2014

because the Startup Current, $I_{CC(ST)}$, is provided to the VCC pin so that the VCC pin voltage does not decrease to $V_{CC(OFF)}$. However, if the Bias Assist function is always activated during steady-state operation including standby mode, the power loss increases. Therefore, the VCC pin voltage should be more than $V_{CC(BIAS)}$, for example, by adjusting the turns ratio of the auxiliary winding and secondary-side winding and/or reducing the value of R2 (see Section 10.1).

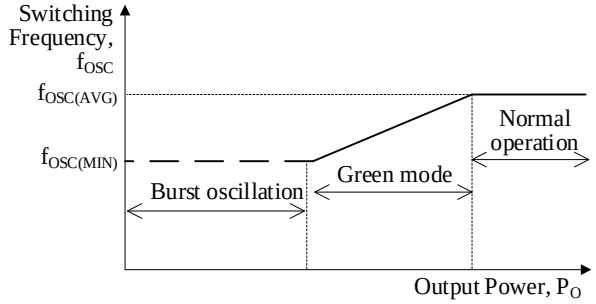

Figure 9-12 Relationship between P_O and f_{OSC}

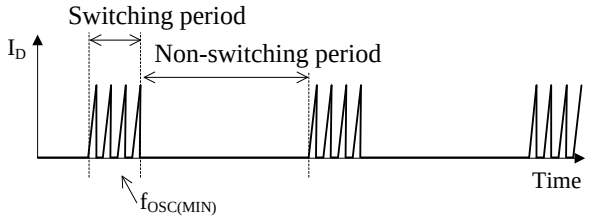

Figure 9-13 Switching Waveform at Burst Oscillation

9.10. Brown-In and Brown-Out Function

This function stops switching operation when it detects low input line voltage, and thus prevents excessive input current and overheating.

This function turns on and off switching operation according to the BR pin voltage detecting the AC input voltage. When BR pin voltage becomes more than $V_{BR(DIS)}$ = 0.6 V, this function is activated.

Figure 9-14 shows waveforms of the BR pin voltage and the drain currnet.

Even if the IC is in the operating state that the VCC pin voltage is $V_{CC(OFF)}$ or more, when the AC input voltage decreases from steady-state and the BR pin voltage falls to $V_{BR(OUT)}$ = 4.80 V or less for the OLP Delay Time, t_{OLP} = 75 ms, the IC stops switching operation.

When the AC input voltage increases and the BR pin voltage reaches $V_{BR(IN)}$ = 5.60 V or more in the operating state that the VCC pin voltage is $V_{CC(OFF)}$ or more, the IC starts switching operation.

When the Brown-In and Brown-Out Function is unnecessary, connect the BR pin trace to the GND pin trace so that the BR pin voltage is $V_{BR(DIS)}$ or less.

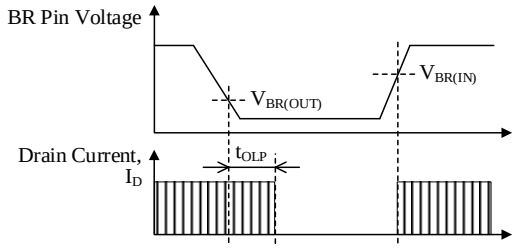

Figure 9-14 BR Pin Voltage and Drain Current Waveforms

There are two types of detection method as follows:

9.10.1. DC Line Detection

Figure 9-15 shows BR pin peripheral circuit of DC line detection. There is a ripple voltage on C1 occurring at a half period of AC cycle. In order to detect each peak of the ripple voltage, the time constant of R_C and C4 should be shorter than a half period of AC cycle.

Since the cycle of the ripple voltage is shorter than t_{OLP}, the switching operation does not stop when only the bottom part of the ripple voltage becomes lower than $V_{BR(OUT)}$.

Thus it minimizes the influence of load conditions on the voltage detection.

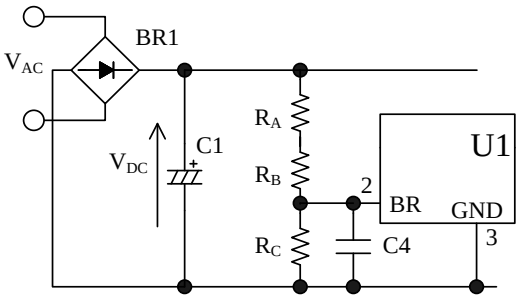

Figure 9-15 DC Line Detection

<< The components around BR pin >>

- RA and RB are a few megohms. Because of high voltage applied and high resistance, it is recommended to select a resistor designed against electromigration or use a combination of resistors in series for that to reduce each applied voltage, according to the requirement of the application.
- RC is a few hundred kilohms
- C4 is 470 pF to 2200 pF for high frequency noise reduction

© SANKEN ELECTRIC CO., LTD. 2014

Neglecting the effect of both input resistance and forward voltage of rectifier diode, the reference value of C1 voltage when Brown-In and Brown-Out Function is activated is calculated as follows:

$$V_{DC(OP)} = V_{BR(TH)} \times \left(1 + \frac{R_A + R_B}{R_C}\right) \quad (3)$$

where,

$V_{DC(OP)}$: C1 voltage when Brown-In and Brown-Out Function is activated

$V_{BR(TH)}$: Any one of threshold voltage of BR pin (see Table 9-1)

Table 9-1 BR Pin Threshold Voltage

Parameter	Symbol	Value (Typ.)
Brown-in Threshold Voltage	$V_{BR(IN)}$	5.60 V
Brown-out Threshold Voltage	$V_{BR(OUT)}$	4.80 V

$V_{DC(OP)}$ can be expressed as the effective value of AC input voltage using Equation (4).

$$V_{AC(OP)RMS} = \frac{1}{\sqrt{2}} \times V_{DC(OP)} \quad (4)$$

R_A, R_B, R_C and C4 should be selected based on actual operation in the application.

9.10.2. AC Line Detection

Figure 9-16 shows BR pin peripheral circuit of AC line detection. In order to detect the AC input voltage (after half-wave rectification), the time constant of R_C and C4 should be longer than the period of AC cycle. Thus the response of BR pin detection becomes slow compared with the DC line detection. This method detects the AC input voltage, and thus it minimizes the influence from load conditions. Also, this method is free of influence from C1 charging and discharging time.

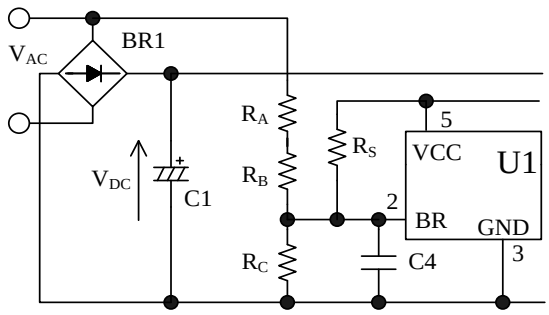

Figure 9-16 AC Line Detection (after Half-wave Rectification)

<< The components around BR pin >>

- RA and RB are a few megohms. Because of high voltage applied and high resistance, it is recommended to select a resistor designed against electromigration or use a combination of resistors in series for that to reduce each applied voltage, according to the requirement of the application.
- RC is a few hundred kilohms
- RS must be adjusted so that the BR pin voltage is more than VBR(DIS) = 0.6 V when the VCC pin voltage is VCC(OFF) = 8.5 V
- C4 is 0.22 µF to 1 µF for averaging AC input voltage and high frequency noise reduction

Neglecting the effect of input resistance is zero, the reference effective value of AC input voltage when Brown-In and Brown-Out Function is activated is calculated as follows:

$$V_{AC(OP)RMS} = \frac{\pi}{\sqrt{2}} \times V_{BR(TH)} \times \left(1 + \frac{R_A + R_B}{R_C}\right) \quad (5)$$

where,

$V_{AC(OP)RMS}$: The effective value of AC input voltage when Brown-In and Brown-Out Function is activated

$V_{BR(TH)}$: Any one of threshold voltage of BR pin (see Table 9-1)

R_A, R_B, R_C and C4 should be selected based on actual operation in the application.

9.11. Overcurrent Protection (OCP)

9.11.1. Overcurrent Protection Operation

Overcurrent Protection (OCP) detects each drain peak current level of a power MOSFET on pulse-by-pulse basis, and limits the output power when the current level reaches to OCP threshold voltage.

During Leading Edge Blanking Time, the OCP threshold voltage becomes $V_{OCP(LEB)}$ = 1.69 V which is higher than the normal OCP threshold voltage as shown in Figure 9-17. Changing to this threshold voltage prevents the IC from responding to the surge voltage in turning-on the power MOSFET. This function operates as protection at the condition such as output windings shorted or unusual withstand voltage of secondary-side rectifier diodes.

When power MOSFET turns on, the surge voltage width of S/OCP pin should be less than t_{BW}, as shown in Figure 9-17. In order to prevent surge voltage, pay extra attention to R_{OCP} trace layout (see Section 10.2).

In addition, if a C (RC) damper snubber of Figure 9-18 is used, reduce the capacitor value of damper snubber.

© SANKEN ELECTRIC CO., LTD. 2014

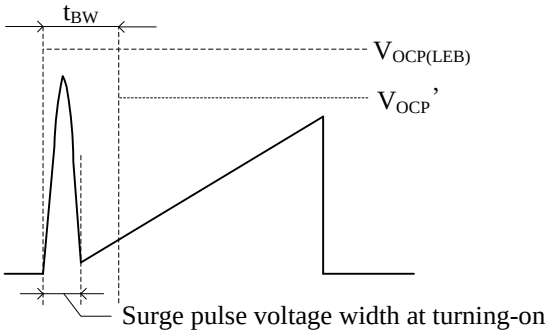

Figure 9-17 S/OCP Pin Voltage

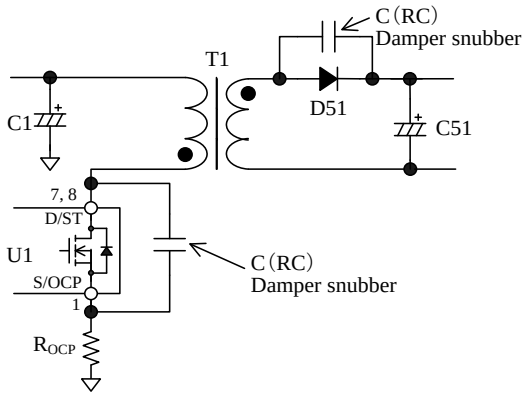

Figure 9-18 Damper Snubber

9.11.2. Input Compensation Function

ICs with PWM control usually have some propagation delay time. The steeper the slope of the actual drain current at a high AC input voltage is, the larger the detection voltage of actual drain peak current is, compared to V_{OCP}. Thus, the peak current has some variation depending on the AC input voltage in OCP state.

In order to reduce the variation of peak current in OCP state, the IC incorporates a built-in Input Compensation Function.

The Input Compensation Function is the function of correction of OCP threshold voltage depending with AC input voltage, as shown in Figure 9-19.

When AC input voltage is low (ON Duty is broad), the OCP threshold voltage is controlled to become high. The difference of peak drain current become small compared with the case where the AC input voltage is high (ON Duty is narrow).

The compensation signal depends on ON Duty. The relation between the ON Duty and the OCP threshold voltage after compensation V_{OCP}' is expressed as Equation (6). When ON Duty is broader than 36 %, the V_{OCP}' becomes a constant value $V_{OCP(H)}$ = 0.888 V

$$V_{OCP}' = V_{OCP(L)} + DPC \times ONTime$$

$$= V_{OCP(L)} + DPC \times \frac{ONDuty}{f_{OSC(AVG)}} \quad (6)$$

where,
$V_{OCP(L)}$:OCP Threshold Voltage at Zero ON Duty
DPC :OCP Compensation Coefficient
ONTime :On-time of power MOSFET
ONDuty :On duty of power MOSFET
$f_{OSC(AVG)}$:Average PWM Switching Frequency

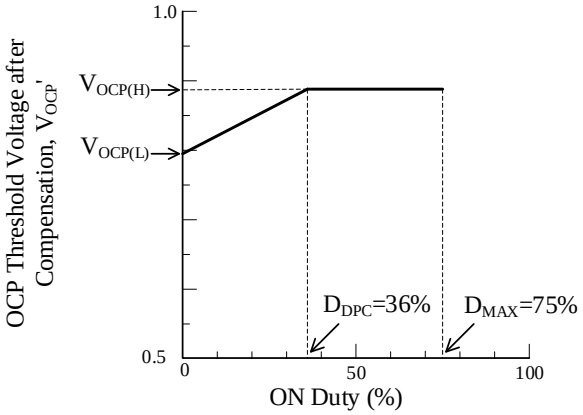

Figure 9-19 Relationship between ON Duty and Drain Current Limit after Compensation

9.12. Overload Protection (OLP)

Figure 9-20 shows the FB/OLP pin peripheral circuit, and Figure 9-21 shows each waveform for OLP operation.

When the peak drain current of I_D is limited by OCP operation, the output voltage, V_{OUT}, decreases and the feedback current from the secondary photo-coupler becomes zero. Thus, the feedback current, I_{FB}, charges C3 connected to the FB/OLP pin and the FB/OLP pin voltage increases. When the FB/OLP pin voltage increases to $V_{FB(OLP)}$ = 7.3 V or more for the OLP delay time, t_{OLP} = 75 ms or more, the OLP function is activated, the IC stops switching operation.

During OLP operation, the intermittent operation by VCC pin voltage repeats and reduces the stress of parts such as the power MOSFET and secondary side rectifier diode.

When the OLP function is activated, the IC stops switching operation, and the VCC pin voltage decreases.

During OLP operation, the Bias Assist Function is disabled. When the VCC pin voltage decreases to $V_{CC(OFF)SKP}$ (about 9 V), the startup current flows, and the VCC pin voltage increases. When the VCC pin voltage increases to $V_{CC(ON)}$, the IC starts operation, and the circuit current increases. After that, the VCC pin voltage decreases. When the VCC pin voltage decreases

© SANKEN ELECTRIC CO., LTD. 2014

to $V_{CC(OFF)}$ = 8.5 V, the control circuit stops operation.

Skipping the UVLO operation of $V_{CC(OFF)}$ (see Section 9.2), the intermittent operation makes the non-switching interval longer and restricts the temperature rise of the power MOSFET.

When the abnormal condition is removed, the IC returns to normal operation automatically.

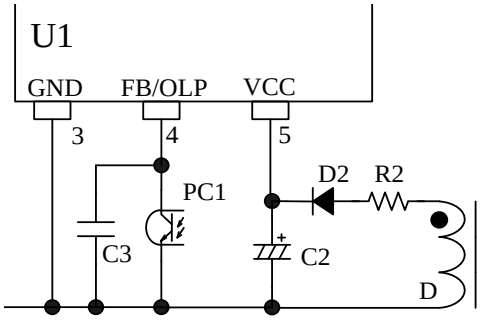

Figure 9-20 FB/OLP Pin Peripheral Circuit

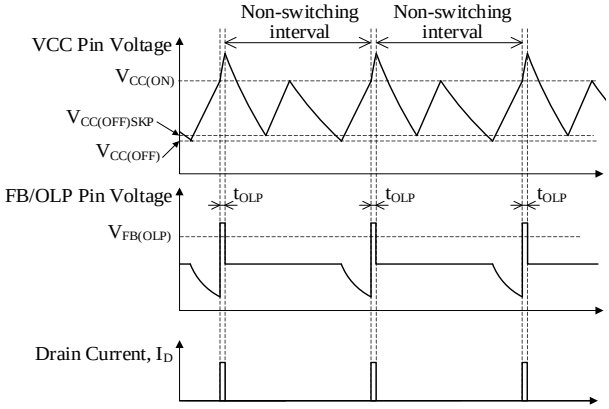

Figure 9-21 OLP Operational Waveforms

9.13. Overvoltage Protection (OVP)

When a voltage between VCC pin and GND terminal increases to $V_{CC(OVP)}$ = 29.1 V or more, Overvoltage Protection (OVP) is activated and the IC stops switching operation at the latched state. In order to keep the latched state, when VCC pin voltage decreases to $V_{CC(BIAS)}$, the bias assist function is activated and VCC pin voltage is kept to over the $V_{CC(OFF)}$.

Releasing the latched state is done by turning off the input voltage and by dropping the VCC pin voltage below $V_{CC(OFF)}$.

When the VCC pin voltage is provided by using auxiliary winding of transformer, the overvoltage conditions such as output voltage detection circuit open can be detected because the VCC pin voltage is proportional to output voltage. The approximate value of output voltage $V_{OUT(OVP)}$ in OVP condition is calculated by using Equation (7).

$$V_{OUT(OVP)} = \frac{V_{OUT(NORMAL)}}{V_{CC(NORMAL)}} \times 29.1 \text{ (V)} \quad (7)$$

where,

$V_{OUT(NORMAL)}$: Output voltage in normal operation

$V_{CC(NORMAL)}$: VCC pin voltage in normal operation

9.14. Thermal Shutdown (TSD)

When the temperature of control circuit increases to $T_{J(TSD)}$ = 145 °C or more, Thermal Shutdown (TSD) is activated, and the IC stops switching operation at the latched state. In order to keep the latched state, when VCC pin voltage decreases to $V_{CC(BIAS)}$, the bias assist function is activated and VCC pin voltage is kept to over the $V_{CC(OFF)}$.

Releasing the latched state is done by turning off the input voltage and by dropping the VCC pin voltage below $V_{CC(OFF)}$.

10. Design Notes

10.1. External Components

Take care to use properly rated, including derating as necessary and proper type of components.

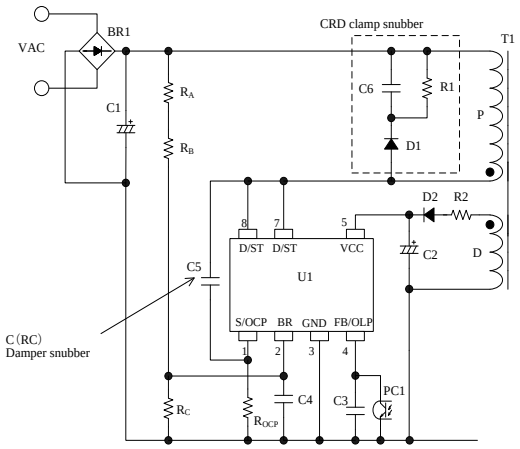

Figure 10-1 IC Peripheral Circuit

© SANKEN ELECTRIC CO., LTD. 2014

10.1.1. Input and Output Electrolytic Capacitor

Apply proper derating to ripple current, voltage, and temperature rise. Use of high ripple current and low impedance types, designed for switch mode power supplies, is recommended.

10.1.2. S/OCP Pin Peripheral Circuit

In Figure 10-1, R_{OCP} is the resistor for the current detection. A high frequency switching current flows to R_{OCP}, and may cause poor operation if a high inductance resistor is used. Choose a low inductance and high surge-tolerant type.

10.1.3. BR Pin peripheral circuit

Because R_A and R_B (see Figure 10-1) are applied high voltage and are high resistance, the following should be considered according to the requirement of the application:

- Select a resistor designed against electromigration, or
- Use a combination of resistors in series for that to reduce each applied voltage

See the section 9.10 about the AC input voltage detection function and the components around BR pin.

10.1.4. FB/OLP Pin Peripheral Circuit

C3 is for high frequency noise reduction and phase compensation, and should be connected close to these pins. The value of C3 is recommended to be about 2200 pF to 0.01 µF, and should be selected based on actual operation in the application.

10.1.5. VCC Pin Peripheral Circuit

The value of C2 is generally recommended to be 10 µF to 47 µF (see Section 9.1 Startup Operation, because the startup time is determined by the value of C2).

In actual power supply circuits, there are cases in which the VCC pin voltage fluctuates in proportion to the output current, IOUT (see Figure 10-2), and the Overvoltage Protection (OVP) on the VCC pin may be activated. This happens because C2 is charged to a peak voltage on the auxiliary winding D, which is caused by the transient surge voltage coupled from the primary winding when the power MOSFET turns off.

For alleviating C2 peak charging, it is effective to add some value R2, of several tenths of ohms to several ohms, in series with D2 (see Figure 10-1). The optimal value of R2 should be determined using a transformer matching what will be used in the actual application, because the variation of the auxiliary winding voltage is affected by the transformer structural design。

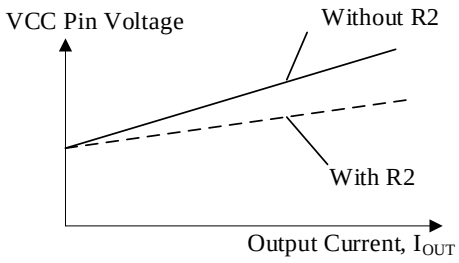

Figure 10-2 Variation of VCC Pin Voltage and Output Current

10.1.6. Snubber Circuit

If the surge voltage of V_{DS} is large, the circuit should be added as follows (see Figure 10-1);

- A clamp snubber circuit of a capacitor-resistor- diode (CRD) combination should be added on the primary winding P.
- A damper snubber circuit of a capacitor (C) or a resistor-capacitor (RC) combination should be added between the D/ST pin and the S/GND pin. When the damper snubber circuit is added, this components should be connected near D/ST pin and S/OCP pin.

10.1.7. Phase Compensation

A typical phase compensation circuit with a secondary shunt regulator (U51) is shown in Figure 10-3.

C52 and R53 are for phase compensation. The value of C52 and R53 are recommended to be around 0.047µF to 0.47µF and 4.7 kΩ to 470 kΩ, respectively. They should be selected based on actual operation in the application.

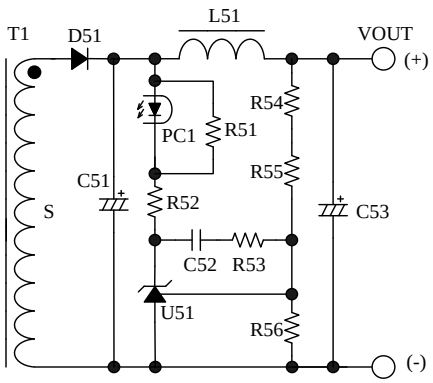

Figure 10-3 Peripheral Circuit of Secondary-side Shunt Regulator (U51)

© SANKEN ELECTRIC CO., LTD. 2014

10.1.8. Transformer

Apply proper design margin to core temperature rise by core loss and copper loss.

Because the switching currents contain high frequency currents, the skin effect may become a consideration.

Choose a suitable wire gauge in consideration of the RMS current and a current density of 4 to 6 A/mm^2.
If measures to further reduce temperature are still necessary, the following should be considered to increase the total surface area of the wiring:

- Increase the number of wires in parallel.
- Use litz wires.
- Thicken the wire gauge.

In the following cases, the surge of VCC pin voltage becomes high.

- The surge voltage of primary main winding, P, is high (low output voltage and high output current power supply designs)
- The winding structure of auxiliary winding, D, is susceptible to the noise of winding P.

When the surge voltage of winding D is high, the VCC pin voltage increases and the Overvoltage Protection (OVP) may be activated. In transformer design, the following should be considered;

- The coupling of the winding P and the secondary output winding S should be maximized to reduce the leakage inductance.
- The coupling of the winding D and the winding S should be maximized.
- The coupling of the winding D and the winding P should be minimized.

In the case of multi-output power supply, the coupling of the secondary-side stabilized output winding, S1, and the others (S2, S3⋯) should be maximized to improve the line-regulation of those outputs.

Figure 10-4 shows the winding structural examples of two outputs.

- Winding structural example (a):
  S1 is sandwiched between P1 and P2 to maximize the coupling of them for surge reduction of P1 and P2.
  D is placed far from P1 and P2 to minimize the coupling to the primary for the surge reduction of D.

- Winding structural example (b)
  P1 and P2 are placed close to S1 to maximize the coupling of S1 for surge reduction of P1 and P2.
  D and S2 are sandwiched by S1 to maximize the coupling of D and S1, and that of S1 and S2. This structure reduces the surge of D, and improves the line-regulation of outputs.

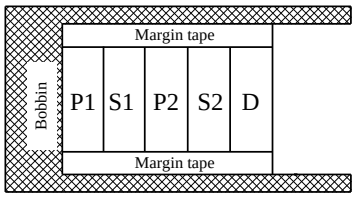

Winding structural example (a)

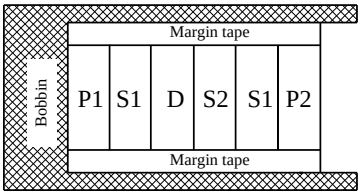

Winding structural example (b)

Figure 10-4 Winding Structural Examples

10.2. PCB Trace Layout and Component Placement

Since the PCB circuit trace design and the component layout significantly affects operation, EMI noise, and power dissipation, the high frequency PCB trace should be low impedance with small loop and wide trace.

In addition, the ground traces affect radiated EMI noise, and wide, short traces should be taken into account.

Figure 10-5 shows the circuit design example.

(1) Main Circuit Trace Layout
This is the main trace containing switching currents, and thus it should be as wide trace and small loop as possible.
If C1 and the IC are distant from each other, placing a capacitor such as film capacitor (about 0.1 μF and with proper voltage rating) close to the transformer or the IC is recommended to reduce impedance of the high frequency current loop.

(2) Control Ground Trace Layout
Since the operation of IC may be affected from the large current of the main trace that flows in control ground trace, the control ground trace should be separated from main trace and connected at a single point grounding of point A in Figure 10-5 as close to the R_{OCP} pin as possible.

(3) VCC Trace Layout
This is the trace for supplying power to the IC, and thus it should be as small loop as possible. If C2 and the IC are distant from each other, placing a capacitor such as film capacitor C_f (about 0.1 μF to 1.0 μF) close to the VCC pin and the GND pin is recommended.

© SANKEN ELECTRIC CO., LTD. 2014

(4) R_{OCP} Trace Layout

R_{OCP} should be placed as close as possible to the S/OCP pin. The connection between the power ground of the main trace and the IC ground should be at a single point ground (point A in Figure 10-5) which is close to the base of R_{OCP}.

(5) Peripheral components of the IC

The components for control connected to the IC should be placed as close as possible to the IC, and should be connected as short as possible to the each pin.

(6) Secondary Rectifier Smoothing Circuit Trace Layout

This is the trace of the rectifier smoothing loop, carrying the switching current, and thus it should be as wide trace and small loop as possible. If this trace is thin and long, inductance resulting from the loop may increase surge voltage at turning off the power MOSFET. Proper rectifier smoothing trace layout helps to increase margin against the power MOSFET breakdown voltage, and reduces stress on the clamp snubber circuit and losses in it.

(7) Thermal Considerations

Because the power MOSFET has a positive thermal coefficient of $R_{DS(ON)}$, consider it in thermal design. Since the copper area under the IC and the D/ST pin trace act as a heatsink, its traces should be as wide as possible.

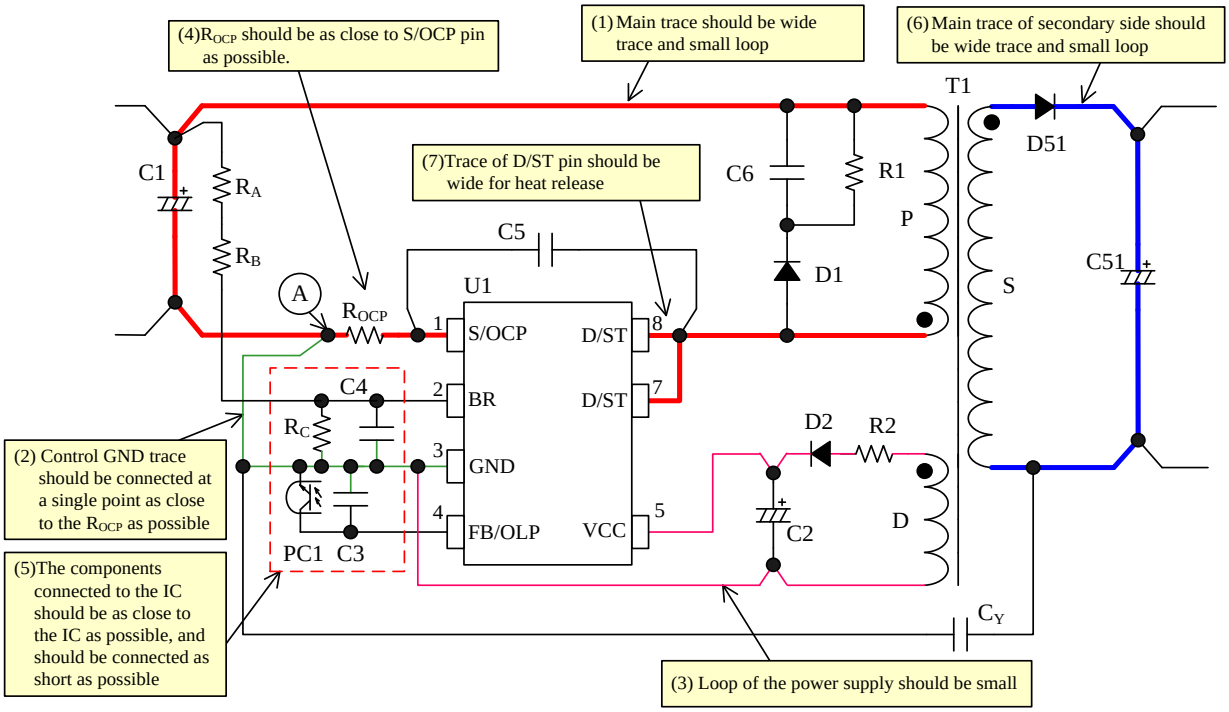

Figure 10-5 Peripheral Circuit Example Around IC

© SANKEN ELECTRIC CO., LTD. 2014

11. Pattern Layout Example

The following show the PCB pattern layout example and the schematic of circuit using STR6A100HZ series.

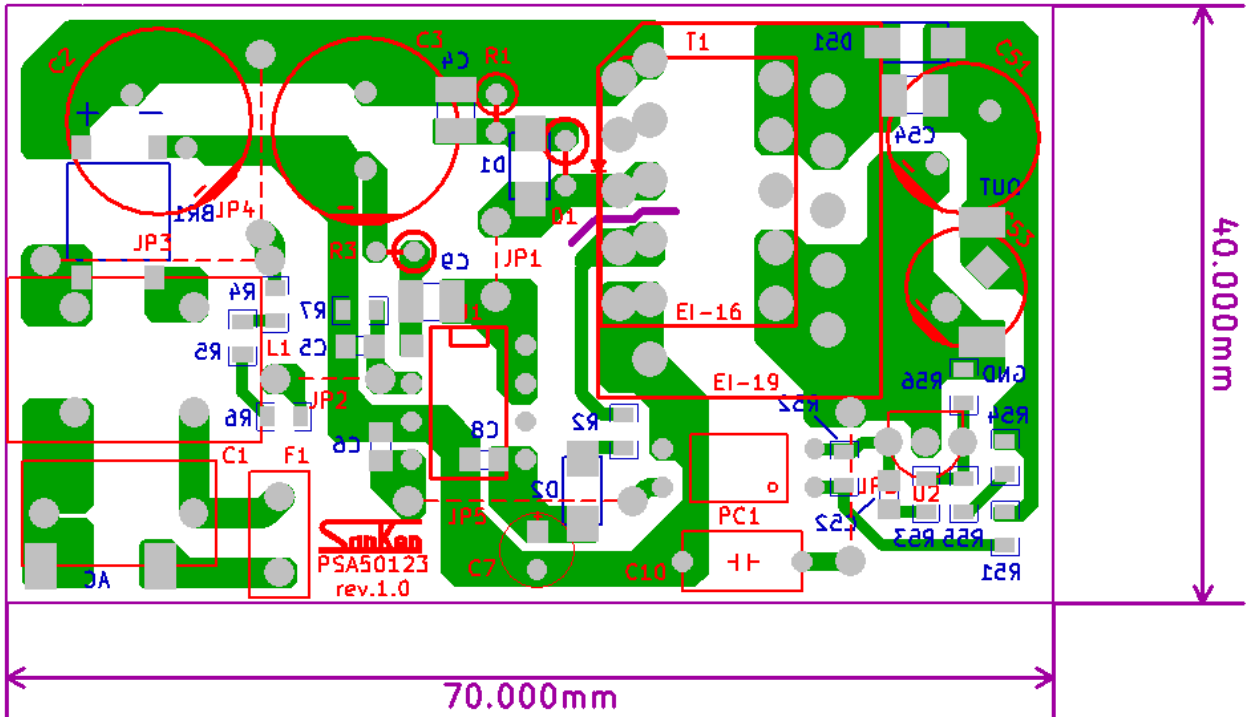

Figure 11-1 PCB Circuit Layout Example

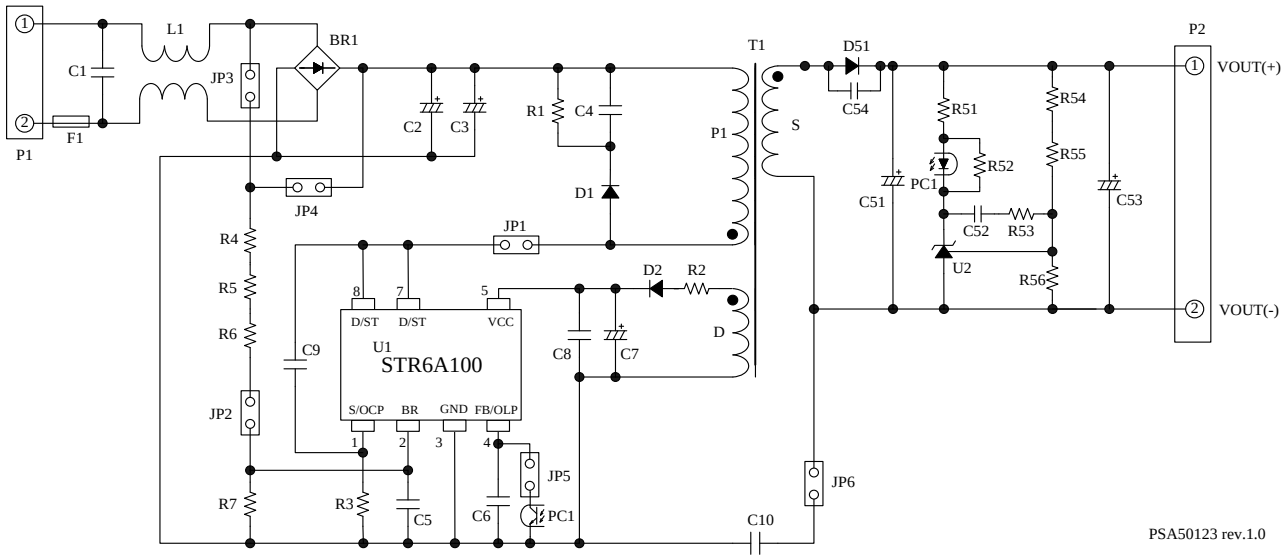

Figure 11-2 Circuit Schematic for PCB Circuit Layout

© SANKEN ELECTRIC CO., LTD. 2014

12. Reference Design of Power Supply

As an example, the following show the power supply specification, the circuit schematic, the bill of materials, and the transformer specification.

- Circuit schematic

IC	STR6A163HZ
Input voltage	85VAC to 265VAC
Maximum output power	21 W
Output voltage	14 V
Output Current	1.5 A (max.)

- Circuit schematic
  See Figure 11-2.

- Transformer specification
  - Primary inductance, L_P : 700 µH
  - Core size : EI-22
  - Al-value : 231 nH/N^2 (Center gap of about 0.23 mm)
  - Winding specification

Winding	Symbol	Number of turns (T)	Wire diameter(mm)	Construction
Primary winding 1	P1	30	2UEW-φ0.23	Single-layer, solenoid winding
Primary winding 2	P2	25	2UEW-φ0.23	Single-layer, solenoid winding
Auxiliary winding	D	10	2UEW-φ0.23	Space winding
Output winding 1	S1	9	TEX-φ0.0.26 × 2	Single-layer, solenoid winding
Output winding 2	S2	9	TEX-φ0.0.26 × 2	Single-layer, solenoid winding

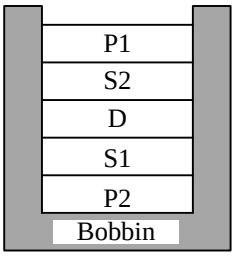

Cross-section view

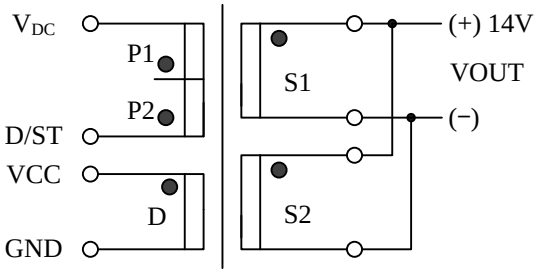

● Start at this pin

© SANKEN ELECTRIC CO., LTD. 2014

● Bill of materials

Symbol	Part type	Ratings[1]	Recommended Sanken Parts	Symbol	Part type	Ratings[1]	Recommended Sanken Parts
BR1	Diode bridge	600 V, 1 A		L1 [2]	CM inductor	10 mH	
C1 [2]	Film, X2	0.1 μF, 275 V		PC1	Photo-coupler	PC123 相当	
C2	Electrolytic	82 μF, 400 V		R1 [3]	Metal oxide	470 kΩ, 1 W	
C3	Electrolytic	Open		R2	General	4.7 Ω	
C4	Ceramic	1000 pF, 630 V		R3	General	1 Ω, 1 W	
C5	Ceramic	1000 pF		R4 [3]	General	2.2 MΩ	
C6 [2]	Ceramic	0.01 μF		R5 [3]	General	2.2 MΩ	
C7	Electrolytic	22 μF, 50 V		R6 [3]	General	Short	
C8 [2]	Ceramic	Open		R7 [3]	General	330 kΩ	
C9 [2]	Ceramic	Open		R51	General	2.2 kΩ	
C10	Ceramic, Y1	2200 pF, 250 VAC		R52	General	1.5 kΩ	
C51	Electrolytic	1000 μF, 25V		R53 [2]	General	10 kΩ	
C52	Ceramic	0.22 μF, 50V		R54	General, 1%	6.8 kΩ	
C53	Electrolytic	Open		R55	General, 1%	39 kΩ	
C54	Ceramic	Open		R56	General, 1%	10 kΩ	
D1	Fast recovery	1000V, 0.5A	EG01C	T1	Transformer	See the specification	
D2	Fast recovery	200 V, 1 A	AL01Z	U1	IC	－	STR6A163HZ
D51	Schottky	100 V, 10 A	FMEN-210A	U2	Shunt regulator	V_{REF}=2.5V TL431or equiv	
F1	Fuse	AC250V, 2 A					

[1] Unless otherwise specified, the voltage rating of capacitor is 50 V or less and the power rating of resistor is 1/8 W or less.
[2] It is necessary to be adjusted based on actual operation in the application.
[3] Resistors applied high DC voltage and of high resistance are recommended to select resistors designed against electromigration or use combinations of resistors in series for that to reduce each applied voltage, according to the requirement of the application.

© SANKEN ELECTRIC CO., LTD. 2014

Important Notes

- All data, illustrations, graphs, tables and any other information included in this document (the "Information") as to Sanken's products listed herein (the "Sanken Products") are current as of the date this document is issued. The Information is subject to any change without notice due to improvement of the Sanken Products, etc. Please make sure to confirm with a Sanken sales representative that the contents set forth in this document reflect the latest revisions before use.
- The Sanken Products are intended for use as components of general purpose electronic equipment or apparatus (such as home appliances, office equipment, telecommunication equipment, measuring equipment, etc.). Prior to use of the Sanken Products, please put your signature, or affix your name and seal, on the specification documents of the Sanken Products and return them to Sanken. When considering use of the Sanken Products for any applications that require higher reliability (such as transportation equipment and its control systems, traffic signal control systems or equipment, disaster/crime alarm systems, various safety devices, etc.), you must contact a Sanken sales representative to discuss the suitability of such use and put your signature, or affix your name and seal, on the specification documents of the Sanken Products and return them to Sanken, prior to the use of the Sanken Products. The Sanken Products are not intended for use in any applications that require extremely high reliability such as: aerospace equipment; nuclear power control systems; and medical equipment or systems, whose failure or malfunction may result in death or serious injury to people, i.e., medical devices in Class III or a higher class as defined by relevant laws of Japan (collectively, the "Specific Applications"). Sanken assumes no liability or responsibility whatsoever for any and all damages and losses that may be suffered by you, users or any third party, resulting from the use of the Sanken Products in the Specific Applications or in manner not in compliance with the instructions set forth herein.
- In the event of using the Sanken Products by either (i) combining other products or materials or both therewith or (ii) physically, chemically or otherwise processing or treating or both the same, you must duly consider all possible risks that may result from all such uses in advance and proceed therewith at your own responsibility.
- Although Sanken is making efforts to enhance the quality and reliability of its products, it is impossible to completely avoid the occurrence of any failure or defect or both in semiconductor products at a certain rate. You must take, at your own responsibility, preventative measures including using a sufficient safety design and confirming safety of any equipment or systems in/for which the Sanken Products are used, upon due consideration of a failure occurrence rate and derating, etc., in order not to cause any human injury or death, fire accident or social harm which may result from any failure or malfunction of the Sanken Products. Please refer to the relevant specification documents and Sanken's official website in relation to derating.
- No anti-radioactive ray design has been adopted for the Sanken Products.
- The circuit constant, operation examples, circuit examples, pattern layout examples, design examples, recommended examples, all information and evaluation results based thereon, etc., described in this document are presented for the sole purpose of reference of use of the Sanken Products.
- Sanken assumes no responsibility whatsoever for any and all damages and losses that may be suffered by you, users or any third party, or any possible infringement of any and all property rights including intellectual property rights and any other rights of you, users or any third party, resulting from the Information.
- No information in this document can be transcribed or copied or both without Sanken's prior written consent.
- Regarding the Information, no license, express, implied or otherwise, is granted hereby under any intellectual property rights and any other rights of Sanken.
- Unless otherwise agreed in writing between Sanken and you, Sanken makes no warranty of any kind, whether express or implied, including, without limitation, any warranty (i) as to the quality or performance of the Sanken Products (such as implied warranty of merchantability, and implied warranty of fitness for a particular purpose or special environment), (ii) that any Sanken Product is delivered free of claims of third parties by way of infringement or the like, (iii) that may arise from course of performance, course of dealing or usage of trade, and (iv) as to the Information (including its accuracy, usefulness, and reliability).
- In the event of using the Sanken Products, you must use the same after carefully examining all applicable environmental laws and regulations that regulate the inclusion or use or both of any particular controlled substances, including, but not limited to, the EU RoHS Directive, so as to be in strict compliance with such applicable laws and regulations.
- You must not use the Sanken Products or the Information for the purpose of any military applications or use, including but not limited to the development of weapons of mass destruction. In the event of exporting the Sanken Products or the Information, or providing them for non-residents, you must comply with all applicable export control laws and regulations in each country including the U.S. Export Administration Regulations (EAR) and the Foreign Exchange and Foreign Trade Act of Japan, and follow the procedures required by such applicable laws and regulations.
- Sanken assumes no responsibility for any troubles, which may occur during the transportation of the Sanken Products including the falling thereof, out of Sanken's distribution network.
- Although Sanken has prepared this document with its due care to pursue the accuracy thereof, Sanken does not warrant that it is error free and Sanken assumes no liability whatsoever for any and all damages and losses which may be suffered by you resulting from any possible errors or omissions in connection with the Information.
- Please refer to our official website in relation to general instructions and directions for using the Sanken Products, and refer to the relevant specification documents in relation to particular precautions when using the Sanken Products.
- All rights and title in and to any specific trademark or tradename belong to Sanken and such original right holder(s).

DSGN-CEZ-16003

© SANKEN ELECTRIC CO., LTD. 2014

ENTEGRECİ

Bu belge www.entegreci.com üzerinden sunulmaktadır.

Elektronik komponent tedarikinde Entegreci

Entegreci, Eskişehir merkezli, Türkiye geneline satış yapan bir elektronik komponent mağazasıdır. Entegreler (IC), mikrodenetleyiciler, transistörler, diyotlar, pasif elemanlar, konnektörler, modüller ve geliştirme kartları tek adetten seri üretim adetlerine kadar satılır. Ürün sayfalarında güncel stok durumunu, fiyatı ve datasheet bağlantısını bulabilirsiniz.

Parça koduyla arama

Üretici parça numarasını yazın; stok ve fiyatı hemen görün.

www.entegreci.com

Ürün kategorileri

Entegreden kapasitöre tüm elektronik komponent kategorileri.

Kategorilere göz atın

Üreticiler

Aradığınız üreticinin ürünlerini tek sayfada inceleyin.

Üreticileri görün

Toplu alım ve teklif

Listede olmayan ya da yüksek adetli parçalar için teklif isteyin.

Teklif isteyin

www.entegreci.com | **destek@entegreci.com** | **0850 305 90 34**

Entegreci is an online electronic components store based in Türkiye. Search by manufacturer part number to see stock, prices and datasheets for integrated circuits, microcontrollers, transistors, passive components and connectors, or request a quote for parts that are not listed.

Bu sayfa Entegreci tarafından eklenmiştir. Belgenin önceki sayfaları asıl yayıncısına aittir ve içeriği değiştirilmemiştir; en güncel sürüm için belgenin yayıncısına başvurun.