Off-Line PWM Controllers with Integrated Power MOSFET

STR3A46xHL/HDL Series

Data Sheet

Description

The STR3A46xHL/HDL series are power ICs for switching power supplies, incorporating a power MOSFET and a current mode PWM controller IC.

To enhance efficiency in all load ranges, the IC automatically shifts its operation to the green mode or burst oscillation mode, depending on the load. The product achieves high cost-performance power supply systems with few external components.

Features

- Bare Lead Frame: Pb-free (RoHS compliant)
- Low Thermal Resistance Package
- Improving circuit efficiency (Since the step drive control can keep V_{RM} of secondary rectification diodes low, the circuit efficiency can be improved by low V_F)
- Noise Reduction
- Current Mode Type PWM Control
- Soft Start Function
- Automatic Standby Function
  No Load Power Consumption < 15mW
- Operation Mode
  Normal Operation ----------PWM Mode
  Light Load Operation ---------- Green-Mode
  Standby ---------- Burst Oscillation Mode
- Random Switching Function
- Slope Compensation Function
- Leading Edge Blanking Function
- Bias Assist Function
- Protections
  Two Types of Overcurrent Protection (OCP): Pulse-by-Pulse, built-in compensation circuit to minimize OCP point variation on AC input voltage
  Overload Protection (OLP): Auto-restart
  Overvoltage Protection (OVP): Auto-restart / Latched shutdowon
  Thermal Shutdown (TSD): Auto-restart / Latched shutdowon

Typical Application

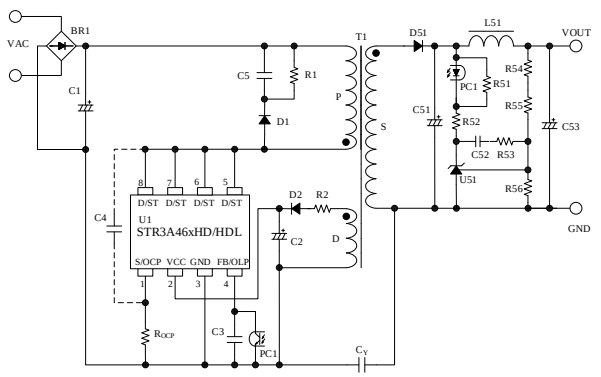

Package

DIP8



Not to Scale

Selection Guide

- Electrical Characteristics
  $f_{OSC(AVG)}$ = 100 kHz (typ.)

Part Number	V_{DSS} (min.)	$R_{DS(ON)}$ (max.)	OVP, TSD Operation
STR3A461HDL(1)	700 V	4.2 Ω	Auto-restart
STR3A461HL		4.2 Ω	Latched shutdown
STR3A462HDL		3.2 Ω	Auto-restart
STR3A463HDL(1)		2.2 Ω	Auto-restart

- Output Power, P_{OUT}(2)

Part Number	P_{OUT} (Adapter)		P_{OUT} (Open frame)	
	AC230V	AC85 ~265V	AC230V	AC85 ~265V
STR3A461HDL(1)	28 W	21 W	38 W	26 W
STR3A461HL				
STR3A462HDL	31 W	24 W	42 W	30 W
STR3A463HDL(1)	34 W	26 W	48 W	34 W

(1) Under development

(2) The output power is actual continues power that is measured at 50 °C ambient. The peak output power can be 120 to 140 % of the value stated here. Core size, duty cycle, and thermal design affect the output power. It may be less than the value stated here.

Applications

- AC/DC adapter
- White goods
- Other SMPS

© SANKEN ELECTRIC CO., LTD. 2016

Contents

Description ---- 1

Contents ---- 2

1. Absolute Maximum Ratings ---- 3

2. Electrical Characteristics ---- 4

3. Mechanical Characteristics ---- 5

4. Performance Curves ---- 5
   - 4.1 Derating Curves ---- 5
   - 4.2 Power MOSFET Safe Operating Area Curves ---- 6
   - 4.3 Ambient Temperature versus Power Dissipation Curves ---- 7
   - 4.4 Transient Thermal Resistance Curves ---- 8

5. Block Diagram ---- 9

6. Pin Configuration Definitions ---- 9

7. Typical Application ---- 10

8. Physical Dimensions ---- 11

9. Marking Diagram ---- 12

10. Operational Description ---- 13
    - 10.1 Startup Operation ---- 13
    - 10.2 Undervoltage Lockout (UVLO) ---- 13
    - 10.3 Bias Assist Function ---- 13
    - 10.4 Soft Start Function ---- 14
    - 10.5 Constant Output Voltage Control ---- 14
    - 10.6 Leading Edge Blanking Function ---- 15
    - 10.7 Random Switching Function ---- 15
    - 10.8 Automatic Standby Function ---- 15
    - 10.9 Step Drive Control ---- 16
    - 10.10 Overcurrent Protection (OCP) ---- 16
      - 10.10.1 OCP Operation ---- 16
      - 10.10.2 OCP Input Compensation Function ---- 17
      - 10.10.3 Overload Protection (OLP) ---- 17
      - 10.10.4 Overvoltage Protection (OVP) ---- 18
      - 10.10.5 Thermal Shutdown (TSD) ---- 18

11. Design Notes ---- 19
    - 11.1 External Components ---- 19
      - 11.1.1 Input and Output Electrolytic Capacitor ---- 19
      - 11.1.2 S/OCP Pin Peripheral Circuit ---- 19
      - 11.1.3 VCC Pin Peripheral Circuit ---- 19
      - 11.1.4 FB/OLP Pin Peripheral Circuit ---- 20
      - 11.1.5 Snubber Circuit ---- 20
      - 11.1.6 Peripheral Circuit of Secondary-side Shunt Regulator ---- 20
      - 11.1.7 Transformer ---- 20
    - 11.2 PCB Trace Layout and Component Placement ---- 21

12. Pattern Layout Example ---- 23

13. Reference Design of Power Supply ---- 24

Important Notes ---- 27

© SANKEN ELECTRIC CO., LTD. 2016

1. Absolute Maximum Ratings

Current polarities are defined as follows: current going into the IC (sinking) is positive current (+); current coming out of the IC (sourcing) is negative current (−).

Unless otherwise specified T_A = 25 °C, 5 pin = 6 pin = 7 pin = 8 pin.

Parameter	Symbol	Conditions	Pins	Rating	Units	Notes
Drain Peak Current(1)	I_{DPEAK}	Single pulse	8 – 1	3.6	A	STR3A461HDL STR3A461HL
				4.0		STR3A462HDL
				4.8		STR3A463HDL
Avalanche Energy(2)(3)	E_{AS}	I_{LPEAK} = 1.43 A	8 – 1	23.8	mJ	STR3A461HDL STR3A461HL
		I_{LPEAK} = 1.58 A		29		STR3A462HDL
		I_{LPEAK} = 1.88 A		41		STR3A463HDL
S/OCP Pin Voltage	$V_{S/OCP}$		1 – 3	−2 to 6	V	
VCC Pin Voltage	V_{CC}		2 – 3	32	V	
FB/OLP Pin Voltage	V_{FB}		4 – 3	−0.3 to 14	V	
FB/OLP Pin Sink Current	I_{FB}		4 – 3	1.0	mA	
D/ST Pin Voltage	$V_{D/ST}$		8 – 3	−1 to V_{DSS}	V	
Power MOSFET Power Dissipation(4)	P_{D1}	(5)	8 – 1	1.68	W	STR3A461HDL STR3A461HL STR3A462HDL
				1.76		STR3A463HDL
Control Part Power Dissipation	P_{D2}		2 – 3	1.3	W	$V_{CC} \times I_{CC}$
Operating Ambient Temperature	T_{OP}		–	−40 to 125	°C	
Storage Temperature	T_{STG}		–	−40 to 125	°C	
Junction Temperature	T_J		–	150	°C	

(1) See Section 4.2.
(2) See Figure 4-2.
(3) Single pulse, V_{DD} = 99 V, L = 20 mH
(4) See Section 4.4.
(5) When embedding this hybrid IC onto the printed circuit board (cupper area in a 15 mm × 15 mm).

© SANKEN ELECTRIC CO., LTD. 2016

2. Electrical Characteristics

Current polarities are defined as follows: current going into the IC (sinking) is positive current (+); current coming out of the IC (sourcing) is negative current (−).

Unless otherwise specified T_A = 25 °C, V_{CC} = 18 V, 5 pin = 6 pin = 7 pin = 8 pin.

Parameter	Symbol	Conditions	Pins	Min.	Typ.	Max.	Units	Notes
Power Supply Startup Operation								
Operation Start Voltage	$V_{CC(ON)}$		2 − 3	13.8	15.0	16.2	V	
Operation Stop Voltage[1]	$V_{CC(OFF)}$		2 − 3	7.6	8.5	9.2	V	
Circuit Current in Operation	$I_{CC(ON)}$	V_{CC} = 12 V	2 − 3	—	1.7	3.0	mA	
Startup Circuit Operation Voltage	$V_{ST(ON)}$		8 − 3	40	47	55	V	
Startup Current	$I_{CC(ST)}$	V_{CC} = 13.5 V	2 − 3	−4.5	− 2.5	−1.2	mA	
Startup Current Biasing Threshold Voltage	$V_{CC(BIAS)}$	I_{CC}=−500μA	2 − 3	8.0	9.6	10.5	V	
Normal Operation								
Average Switching Frequency	$f_{OSC(AVG)}$		8 − 3	90	100	110	kHz	
Switching Frequency Modulation Deviation	Δf		8 − 3	—	8.4	—	kHz	
Maximum Feedback Current	$I_{FB(MAX)}$	V_{CC} = 12 V	4 − 3	−110	−72	−40	μA	
Minimum Feedback Current	$I_{FB(MIN)}$		4 − 3	−21	−13	−5	μA	
Light Load Operation								
FB/OLP Pin Starting Voltage of Frequency Decreasing	$V_{FB(FDS)}$		4 − 3	2.88	3.60	4.32	V	
FB/OLP Pin Ending Voltage of Frequency Decreasing	$V_{FB(FDE)}$		4 − 3	2.48	3.10	3.72	V	
Minimum Switching Frequency	$f_{OSC(MIN)}$		8 − 3	22	30	38	kHz	
Standby Operation								
Oscillation Stop FB Voltage	$V_{FB(OFF)}$		4 − 3	1.62	1.77	1.92	V	
Protection								
Maximum Duty Cycle	D_{MAX}		8 − 3	70	75	80	%	
Leading Edge Blanking Time	t_{BW}		—	—	330	—	ns	
OCP Compensation Coefficient	DPC		—	—	25.8	—	mV/μs	
OCP Compensation Duty Cycle	D_{DPC}		—	—	36	—	%	
OCP Threshold Voltage at Zero Duty Cycle	$V_{OCP(L)}$		1 − 3	0.735	0.795	0.855	V	
OCP Threshold Voltage at 36% Duty Cycle	$V_{OCP(H)}$		1 − 3	0.843	0.888	0.933	V	
OCP Threshold Voltage During LEB (t_{BW})	$V_{OCP(LEB)}$		1 − 3	—	1.69	—	V	
OLP Threshold Voltage	$V_{FB(OLP)}$		4 − 3	6.8	7.3	7.8	V	
OLP Operation Current	$I_{CC(OLP)}$	V_{CC} = 12 V	2 − 3	—	260	—	μA	
OLP Delay Time	t_{OLP}		—	55	75	90	ms	
FB/OLP Pin Clamp Voltage	$V_{FB(CLAMP)}$		4 − 3	10.5	11.8	13.5	V	

[1] $V_{CC(BIAS)} > V_{CC(OFF)}$ always.

© SANKEN ELECTRIC CO., LTD. 2016

Parameter	Symbol	Conditions	Pins	Min.	Typ.	Max.	Units	Notes
OVP Threshold Voltage	$V_{CC(OVP)}$		2 – 3	27.0	29.1	31.2	V	
Thermal Shutdown Operating Temperature	$T_{J(TSD)}$		—	127	145	—	°C	
Thermal Shutdown Hysteresis Temperature	$T_{J(TSD)HYS}$		—	—	80	—	°C	STR3A46xHDL
Power MOSFET								
Drain-to-Source Breakdown Voltage	V_{DSS}	I_{DS} = 300 µA	8 – 1	700	—	—	V	
Drain Leakage Current	I_{DSS}	V_{DS} = V_{DSS}	8 – 1	—	—	300	µA	
On Resistance	$R_{DS(ON)}$	I_{DS} = 0.4 A	8 – 1	—	—	4.2	Ω	STR3A461HDL STR3A461HL
				—	—	3.2		STR3A462HDL
				—	—	2.2		STR3A463HDL
Switching Time	t_f		8 – 1	—	—	250	ns	
Thermal Resistance								
Junction to Case Thermal Resistance[(2)]	θ_{J-C}		—	—	—	18	°C/W	

(2) θ_{J-C} is thermal resistance between junction and case. Case temperature (T_C) is measured at the center of the case top surface.

3. Mechanical Characteristics

Parameter	Conditions	Min.	Typ.	Max.	Unit
Package Weight		—	0.51	—	g

4. Performance Curves

4.1 Derating Curves

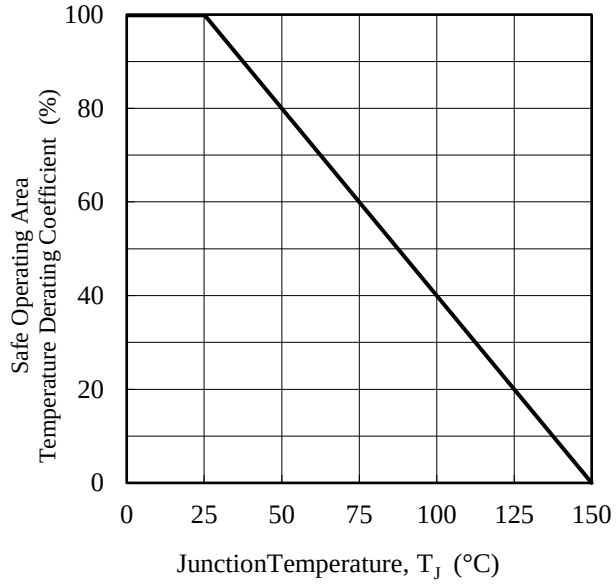

Figure 4-1 SOA Temperature Derating Coefficient Curve

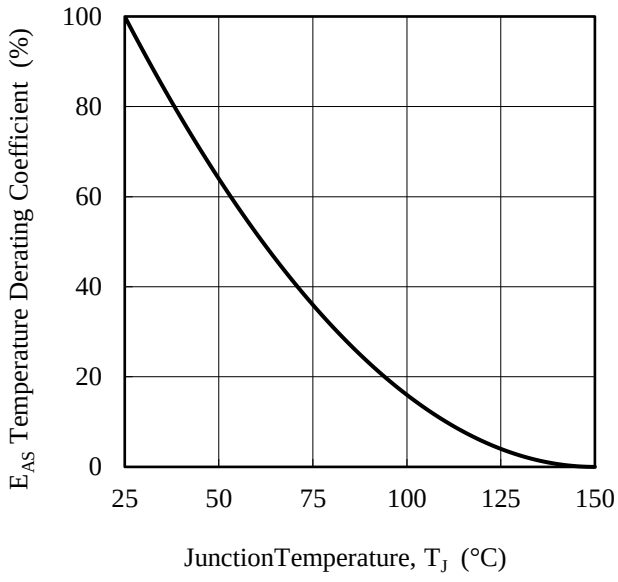

Figure 4-2 Avalanche Energy Derating Coefficient Curve

© SANKEN ELECTRIC CO., LTD. 2016

4.2 Power MOSFET Safe Operating Area Curves

When the IC is used, the safe operating area curve should be multiplied by the temperature derating coefficient derived from Figure 4-1. The broken line in the safe operating area curve is the drain current curve limited by on-resistance.

Unless otherwise specified, T_A = 25 °C, Single pulse.

● STR3A461HDL, STR3A461HL

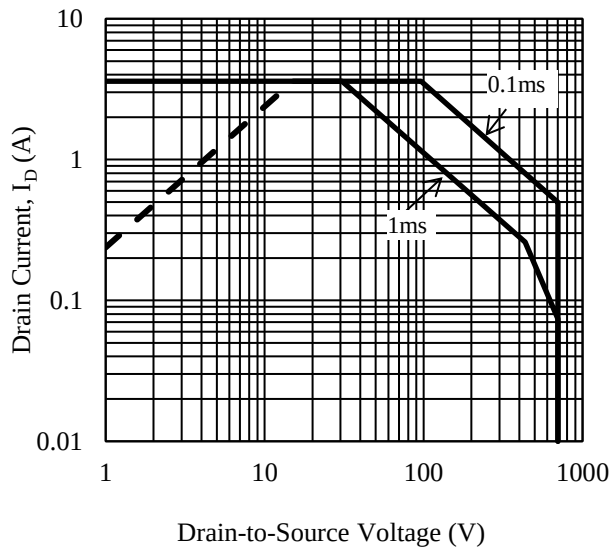

● STR3A462HDL

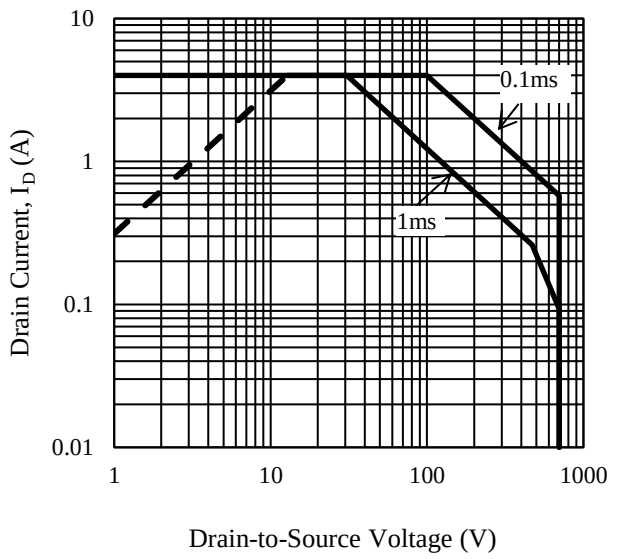

● STR3A463HDL

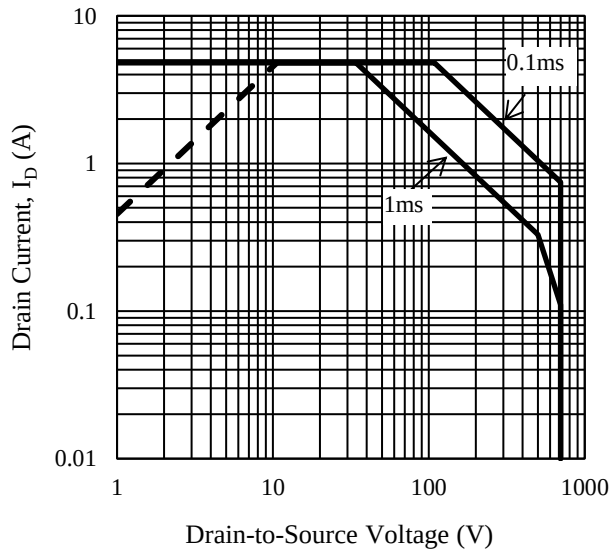

© SANKEN ELECTRIC CO., LTD. 2016

4.3 Ambient Temperature versus Power Dissipation Curves

● STR3A461HDL, STR3A461HL, STR3A462HDL

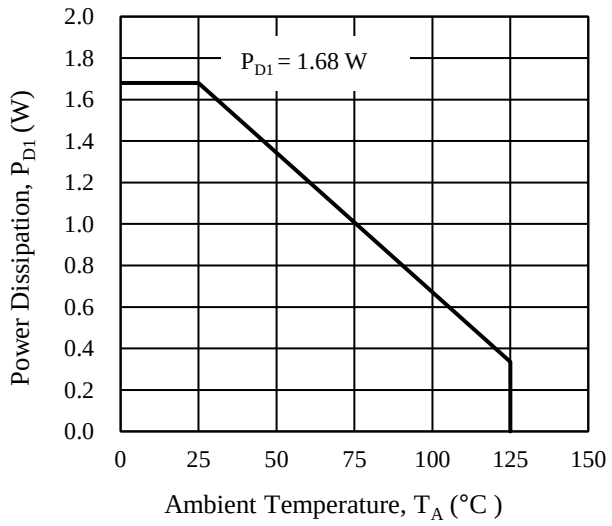

● STR3A463HDL

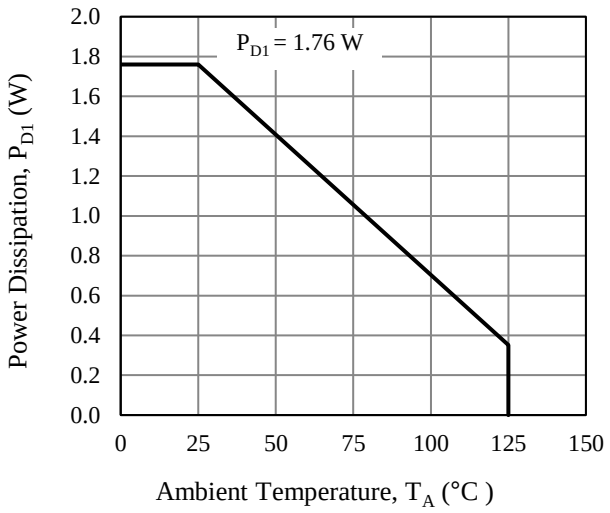

© SANKEN ELECTRIC CO., LTD. 2016

4.4 Transient Thermal Resistance Curves

● STR3A461HDL, STR3A461HL

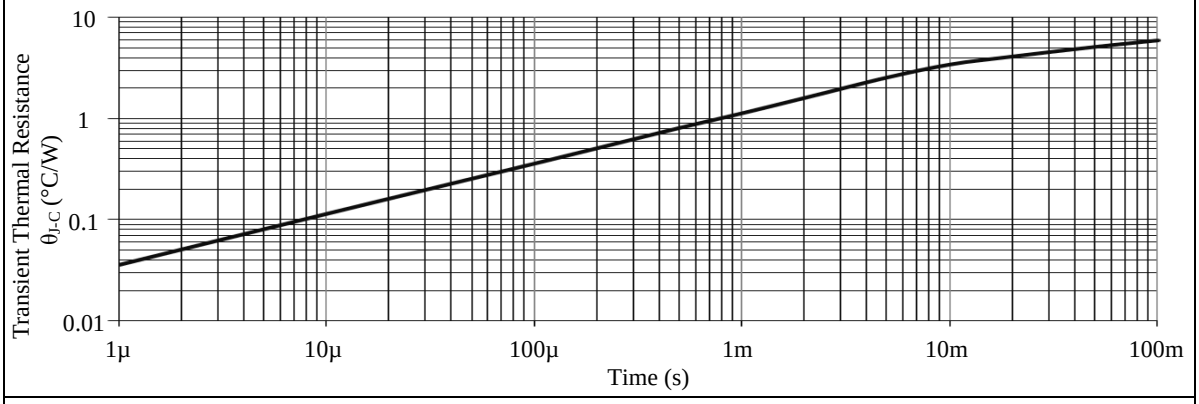

● STR3A462HDL

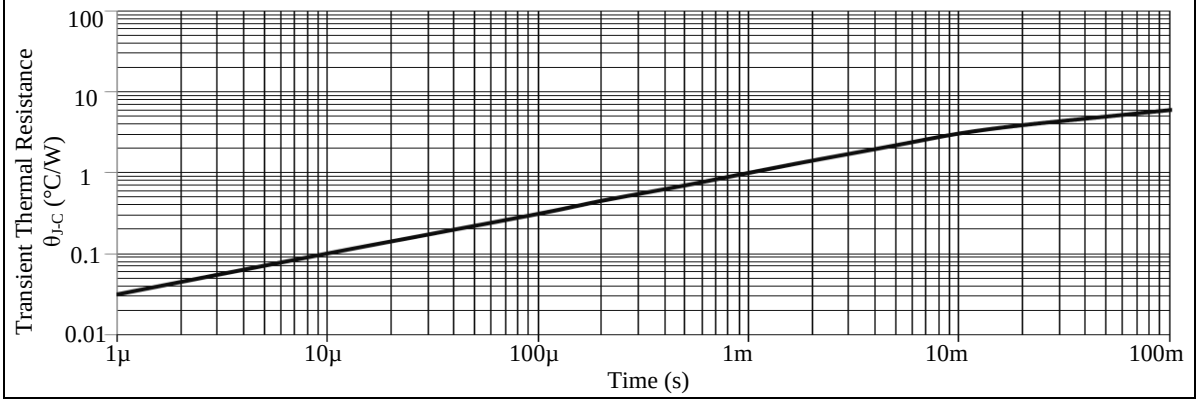

● STR3A463HDL

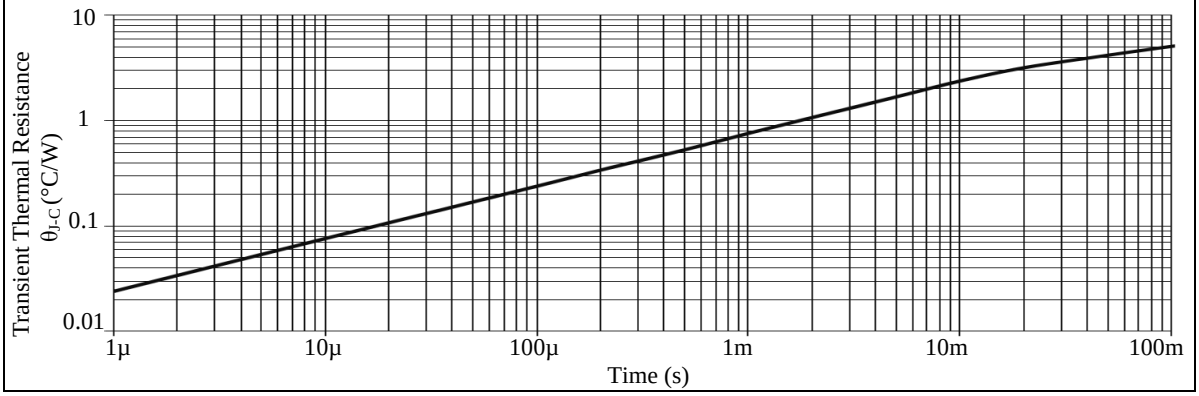

© SANKEN ELECTRIC CO., LTD. 2016

5. Block Diagram

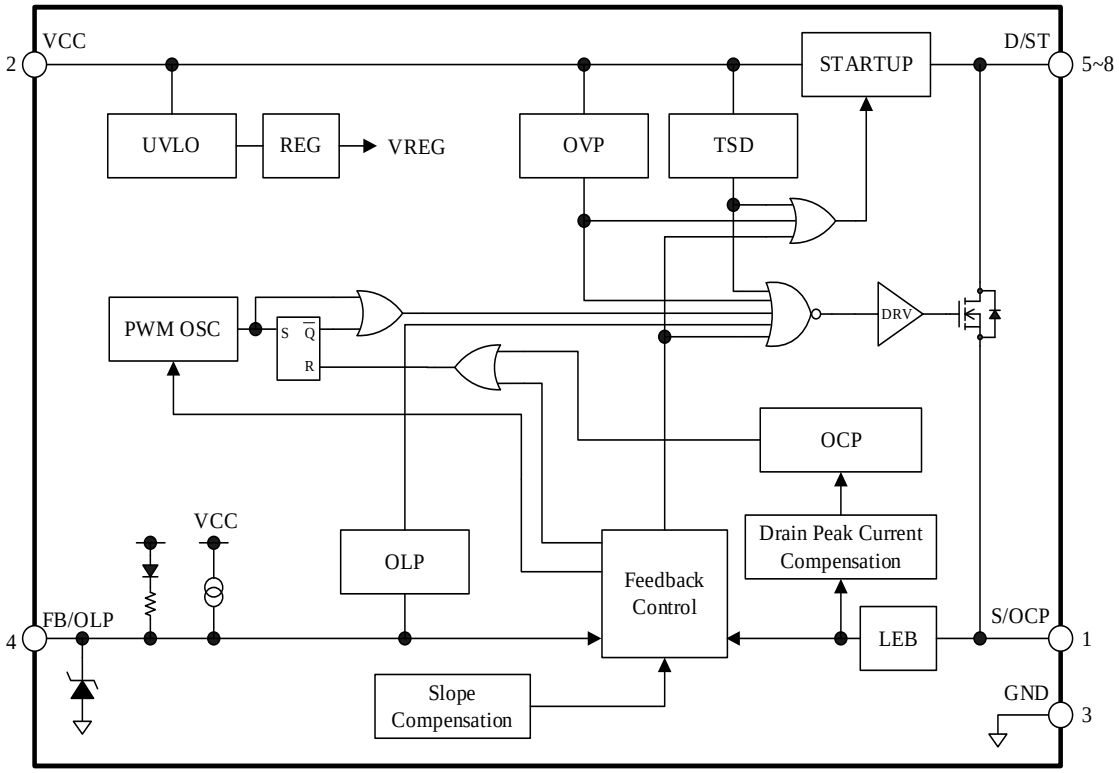

6. Pin Configuration Definitions

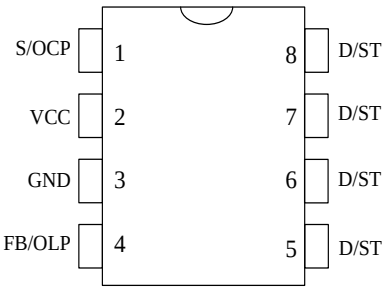

Pin	Name	Descriptions
1	S/OCP	Power MOSFET source and input of overcurrent protection (OCP) signal
2	VCC	Power supply voltage input for control part and input of overvoltage protection (OVP) signal
3	GND	Ground
4	FB/OLP	Input of constant voltage control signal and input of overload protection (OLP) signal
5	D/ST	Power MOSFET drain and input of startup current
6		
7		
8		

© SANKEN ELECTRIC CO., LTD. 2016

7. Typical Application

The PCB traces D/ST pins should be as wide as possible, in order to enhance thermal dissipation.

In applications having a power supply specified such that V_{DS} has large transient surge voltages, a clamp snubber circuit of a capacitor-resistor-diode (CRD) combination should be added on the primary winding P, or a damper snubber circuit of a capacitor (C) or a resistor-capacitor (RC) combination should be added between the D/ST pin and the S/OCP pin.

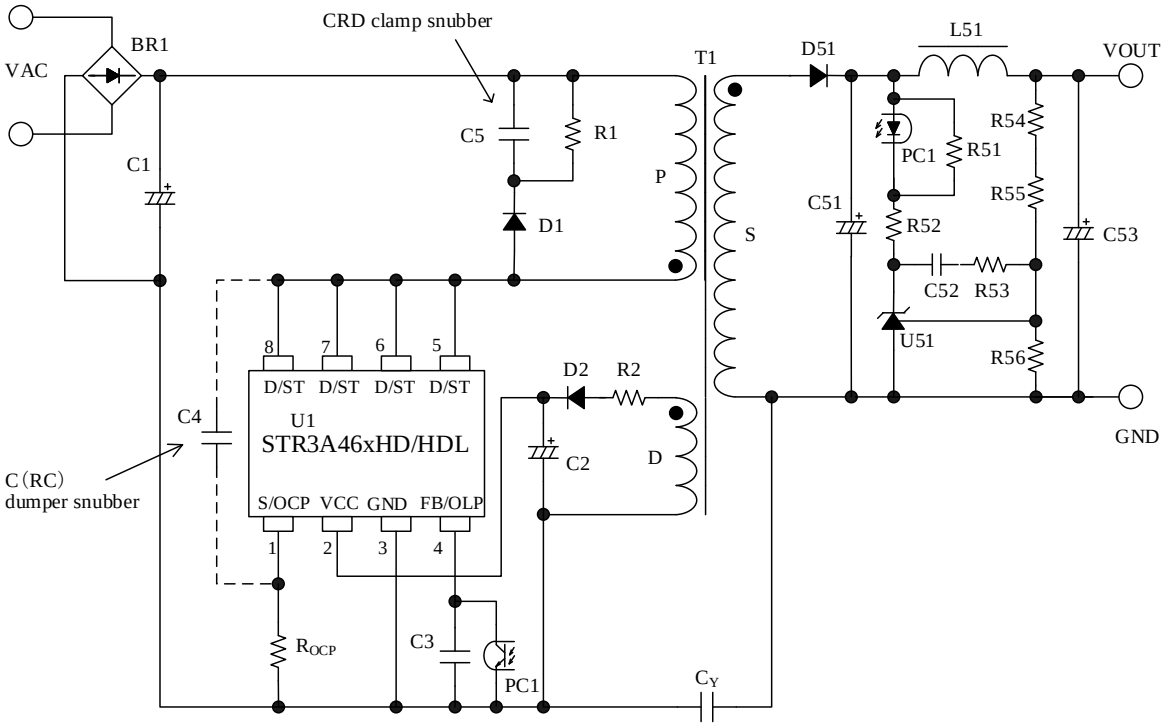

Figure 7-1. Typical Application

© SANKEN ELECTRIC CO., LTD. 2016

8. Physical Dimensions

● DIP8

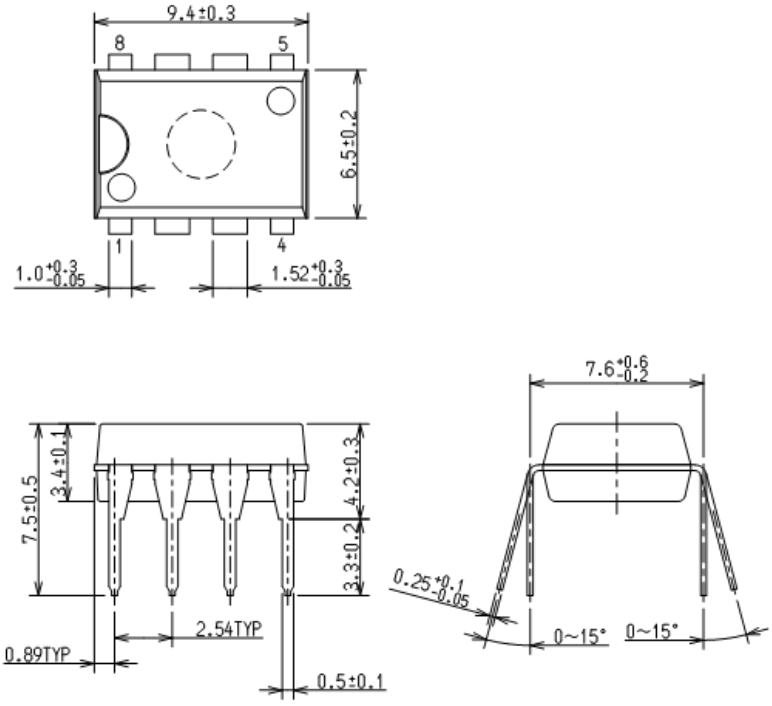

NOTES:

- Dimensions in millimeters
- Bare lead frame: Pb-free (RoHS compliant)
- When soldering the products, it is required to minimize the working time within the following limits:
  Flow: 260 °C / 10 s, 1 time
  Soldering Iron: 350 °C / 3.5 s, 1 time
  Soldering should be at a distance of at least 1.5 mm from the body of the product.

© SANKEN ELECTRIC CO., LTD. 2016

9. Marking Diagram

STR3A46xHL

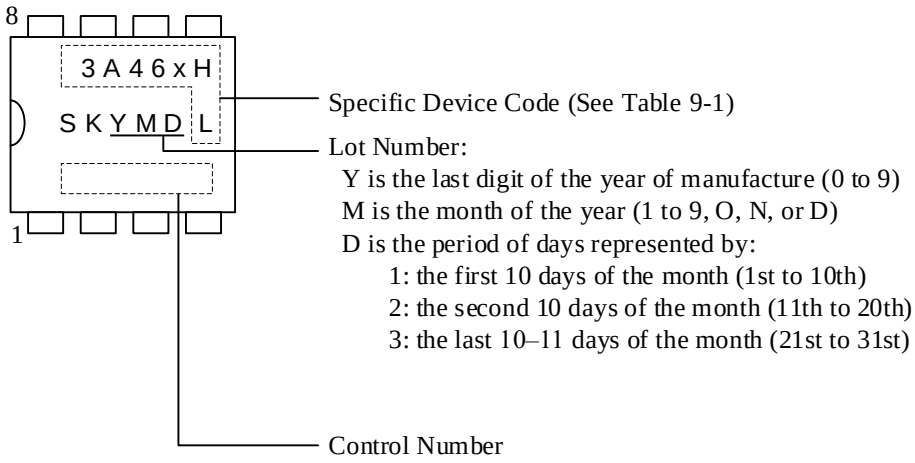

STR3A46xHDL

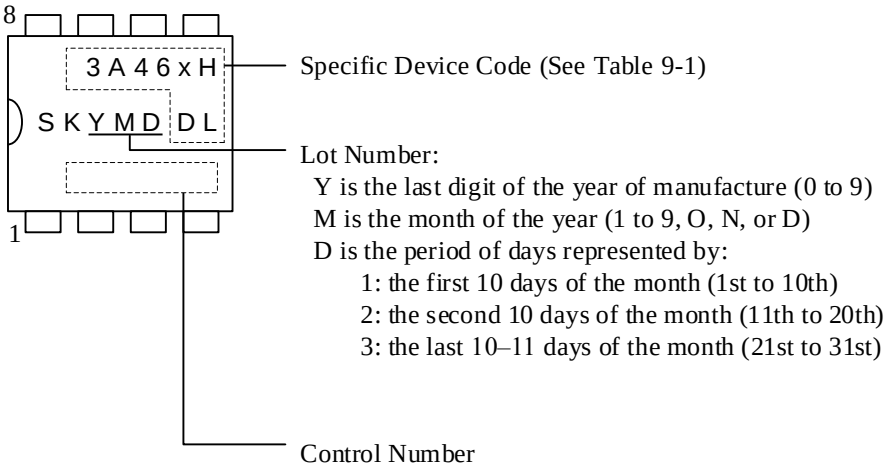

Table 9-1. Specific Device Code

Specific Device Code	Part Number
3A461HDL	STR3A461HDL
3A461HL	STR3A461HL
3A462HDL	STR3A462HDL
3A463HDL	STR3A463HDL

© SANKEN ELECTRIC CO., LTD. 2016

10. Operational Description

All the characteristic values given in this section are typical values, unless they are specified as minimum or maximum. Current polarities are defined as follows: current going into the IC (sinking) is positive current (+); current coming out of the IC (sourcing) is negative current (−).

10.1 Startup Operation

Figure 10-1 shows the circuit around the VCC pin.

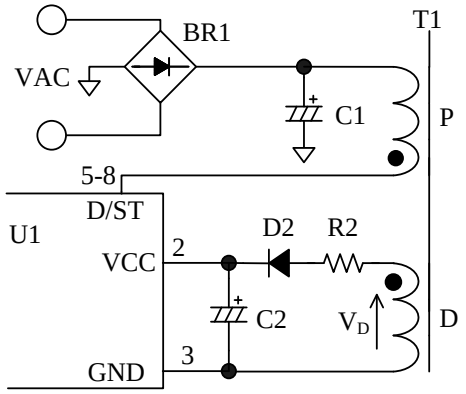

Figure 10-1. VCC Pin Peripheral Circuit

The IC incorporates the startup circuit. The circuit is connected to the D/ST pin. When D/ST pin voltage reaches to Startup Circuit Operation Voltage $V_{ST(ON)}$ = 47 V, the startup circuit starts operation. During the startup process, the constant current, $I_{CC(ST)}$ = − 2.5 mA, charges C2 at the VCC pin. When VCC pin voltage increases to $V_{CC(ON)}$ = 15.0 V, the control circuit starts switching operation. During the IC operation, the voltage rectified the auxiliary winding voltage, V_D, of Figure 10-1 becomes a power source to the VCC pin.

After switching operation begins, the startup circuit turns off automatically so that its current consumption becomes zero. The approximate value of auxiliary winding voltage is about 18V, taking account of the winding turns of D winding so that the VCC pin voltage becomes Equation (1) within the specification of input and output voltage variation of power supply.

$$V_{CC(BIAS)}(\text{max.}) < V_{CC} < V_{CC(OVP)}(\text{min.})$$

$$\Rightarrow 10.5\ (\text{V}) < V_{CC} < 27.0\ (\text{V}) \quad (1)$$

The startup time of the IC is determined by C2 capacitor value. The approximate startup time t_{START} is calculated as follows:

$$t_{START} = C2 \times \frac{V_{CC(ON)} - V_{CC(INT)}}{|I_{CC(ST)}|} \quad (2)$$

where,
t_{START}: Startup time of the IC (s)
$V_{CC(INT)}$: Initial voltage on the VCC pin (V)

10.2 Undervoltage Lockout (UVLO)

Figure 10-2 shows the relationship of VCC pin voltage and circuit current I_{CC}. When the VCC pin voltage decreases to $V_{CC(OFF)}$ = 8.5 V, the control circuit stops operation by UVLO (Undervoltage Lockout) circuit, and reverts to the state before startup.

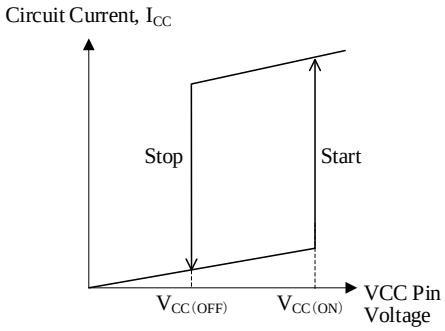

Figure 10-2. Relationship between VCC Pin Voltage and I_{CC}

10.3 Bias Assist Function

By the bias assist function, the startup failure is prevented. When FB pin voltage decreases to $V_{FB(OFF)}$= 1.77 V or less and VCC pin voltage decreases to the Startup Current Biasing Threshold Voltage, $V_{CC(BIAS)}$ = 9.6 V, the bias assist function is activated.

When the bias assist function is activated, the VCC pin voltage is kept almost constant voltage, $V_{CC(BIAS)}$ by providing the startup current, $I_{CC(ST)}$, from the startup circuit. Thus, the VCC pin voltage is kept more than $V_{CC(OFF)}$.

Since the startup failure is prevented by the bias assist function, the value of C2 connected to the VCC pin can be small. Thus, the startup time and the response time of the overvoltage protection (OVP) become shorter.

The operation of the bias assist function in startup is as follows. It is necessary to check and adjust the startup process based on actual operation in the application, so that poor starting conditions may be avoided.

Figure 10-3 shows the VCC pin voltage behavior

© SANKEN ELECTRIC CO., LTD. 2016

during the startup period. After the VCC pin voltage increases to $V_{CC(ON)}$ = 15.0 V at startup, the IC starts the operation. Then circuit current increases and the VCC pin voltage decreases. At the same time, the auxiliary winding voltage, V_D, increases in proportion to output voltage. These are all balanced to produce the VCC pin voltage.

When the VCC pin voltage is decrease to $V_{CC(OFF)}$ = 8.5 V in startup operation, the IC stops switching operation and a startup failure occurs. When the output load is light at startup, the output voltage may become more than the target voltage due to the delay of feedback circuit. In this case, the FB pin voltage is decreased by the feedback control. When the FB pin voltage decreases to $V_{FB(OFF)}$ or less, the IC stops switching operation and the VCC pin voltage decreases. When the VCC pin voltage decreases to $V_{CC(BIAS)}$, the bias assist function is activated and the startup failure is prevented.

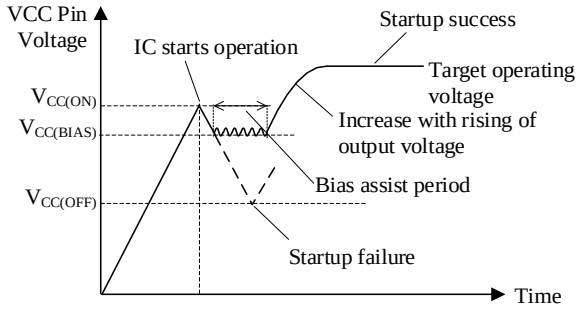

Figure 10-3. VCC Pin Voltage during Startup Period

10.4 Soft Start Function

Figure 10-4 shows the behavior of VCC pin voltage and drain current during the startup period.

The IC activates the soft start circuitry during the startup period. Soft start time is fixed to around 8.75 ms. during the soft start period, overcurrent threshold is increased step-wisely (7 steps). This function reduces the voltage and the current stress of a power MOSFET and the secondary side rectifier diode.

Since the Leading Edge Blanking Function (see Section 10.6) is deactivated during the soft start period, there is the case that on time is less than the leading edge blanking time, t_{BW} = 330 ns.

After the soft start period, D/ST pin current, I_D, is limited by the overcurrent protection (OCP), until the output voltage increases to the target operating voltage. This period is given as t_{LIM}.

In case t_{LIM} is longer than the OLP Delay Time, t_{OLP}, the output power is limited by the overload protection (OLP) operation.

Thus, it is necessary to adjust the value of output capacitor and the turn ratio of auxiliary winding D so that the t_{LIM} is less than t_{OLP} = 55 ms (min.).

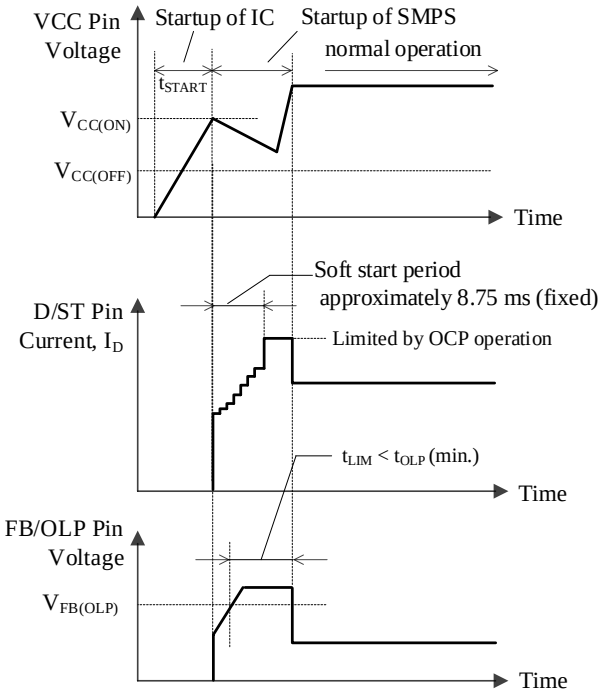

Figure 10-4. V_{CC} and I_D Waveforms during Startup

10.5 Constant Output Voltage Control

The IC achieves the constant voltage control of the power supply output by using the current-mode control method, which enhances the response speed and provides the stable operation. The FB/OLP pin voltage is internally added the slope compensation at the feedback control (see Section 5), and the target voltage, V_{SC}, is generated. The IC compares the voltage, V_{ROCP}, of a current detection resistor with the target voltage, V_{SC}, by the internal FB comparator, and controls the peak value of V_{ROCP} so that it gets close to V_{SC}, as shown in Figure 10-5 and Figure 10-6.

- Light Load Conditions
  When load conditions become lighter, the output voltage, V_{OUT}, increases. Thus, the feedback current from the error amplifier on the secondary-side also increases. The feedback current is sunk at the FB/OLP pin, transferred through a photo-coupler, PC1, and the FB/OLP pin voltage decreases. Thus, V_{SC} decreases, and the peak value of V_{ROCP} is controlled to be low, and the peak drain current of I_D decreases.
  This control prevents the output voltage from increasing.

- Heavy Load Conditions
  When load conditions become greater, the IC performs the inverse operation to that described above. Thus, V_{SC} increases and the peak drain current of I_D increases.

© SANKEN ELECTRIC CO., LTD. 2016

This control prevents the output voltage from decreasing.

In the current mode control method, when the drain current waveform becomes trapezoidal in continuous operating mode, even if the peak current level set by the target voltage is constant, the on-time fluctuates based on the initial value of the drain current.

This results in the on-time fluctuating in multiples of the fundamental operating frequency as shown in Figure 10-7. This is called the subharmonics phenomenon.

In order to avoid this, the IC incorporates the Slope Compensation Function. Because the target voltage is added a down-slope compensation signal, which reduces the peak drain current as the duty cycle gets wider relative to the FB/OLP pin signal to compensate V_{SC}, the subharmonics phenomenon is suppressed.

Even if subharmonic oscillations occur when the IC has some excess supply being out of feedback control, such as during startup and load shorted, this does not affect performance of normal operation.

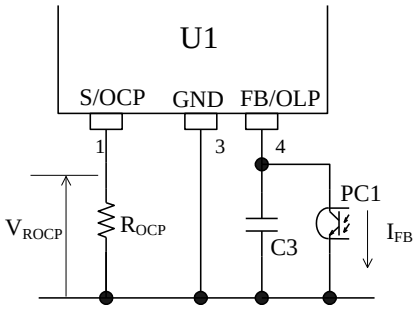

Figure 10-5. FB/OLP Pin Peripheral Circuit

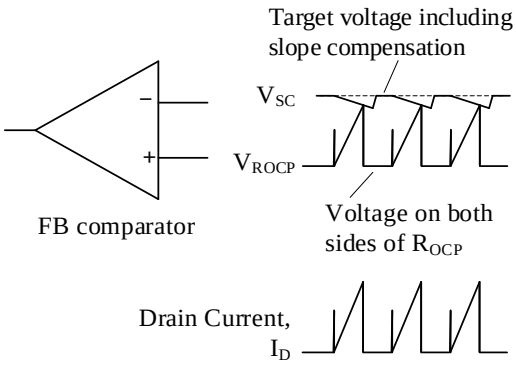

Figure 10-6. Drain Current, I_D, and FB Comparator Operation in Steady Operation

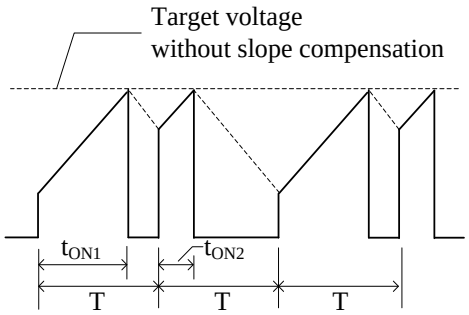

Figure 10-7. Drain Current, I_D, Waveform in Subharmonic Oscillation

10.6 Leading Edge Blanking Function

The constant voltage control of output of the IC uses the peak-current-mode control method.

In peak-current-mode control method, there is a case that the power MOSFET turns off due to unexpected response of a FB comparator or an overcurrent protection (OCP) circuit to the steep surge current in turning on a power MOSFET. In order to prevent this response to the surge voltage in turning-on the power MOSFET, the Leading Edge Blanking, t_{BW} = 330 ns is built-in. During t_{BW}, the OCP threshold voltage becomes $V_{OCP(LEB)}$ = 1.69 V in order not to respond to the turn-on drain current surge (see Section 10.10).

10.7 Random Switching Function

The IC modulates its switching frequency randomly by superposing the modulating frequency on $f_{OSC(AVG)}$ in normal operation. This function reduces the conduction noise compared to others without this function, and simplifies noise filtering of the input lines of power supply.

10.8 Automatic Standby Function

The IC has Automatic Standby Function to achieve higher efficiency at light load. In order to reduce the switching loss, the Automatic Standby Function automatically changes the oscillation mode to green mode or burst oscillation mode (see Figure 10-8).

When the output load becomes lower, FB/OLP pin voltage decreases. When the FB/OLP pin voltage decreases to $V_{FB(FDS)}$ = 3.60 V or less, the green mode is activated and the oscillation frequency starts decreasing. When the FB/OLP pin voltage becomes $V_{FB(FDE)}$ = 3.10 V, the oscillation frequency stops decreasing. At this point, the oscillation frequency becomes $f_{OSC(MIN)}$ = 30 kHz. When the FB/OLP pin voltage further decreases and becomes the standby operation point, the burst oscillation

© SANKEN ELECTRIC CO., LTD. 2016

mode is activated. As shown in Figure 10-9, the burst oscillation mode consists of the switching period and the non-switching period. The oscillation frequency during the switching period is the Minimum Frequency, $f_{OSC(MIN)}$ = 30 kHz.

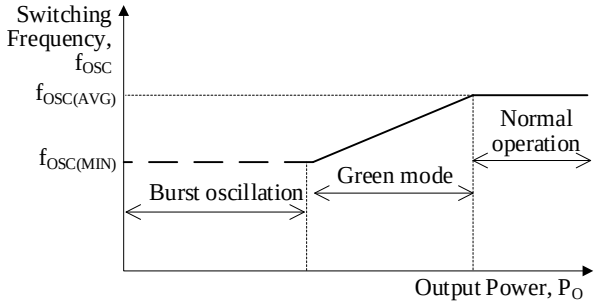

Figure 10-8. Relationship between P_O and f_{OSC}

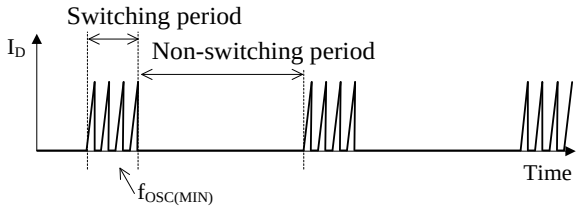

Figure 10-9. Switching Waveform at Burst Oscillation

Generally, in order to improve efficiency under light load conditions, the frequency of the burst mode becomes just a few kilohertz. Because the IC suppresses the peak drain current well during burst mode, audible noises can be reduced.

The IC has some detection delay time. The higher the AC input voltage is, the steeper the slope of the drain current, I_D is. Thus, the peak of I_D at automatic standby mode becomes high at a high AC input voltage.

It is necessary to consider that the burst frequency becomes low at a high AC input.

If VCC pin voltage decreases to $V_{CC(BIAS)}$ = 9.6 V during the transition to the burst mode, The bias assist function is activated and stabilizes the standby mode, because the Startup Current, $I_{CC(ST)}$, is provided to the VCC pin so that the VCC pin voltage does not decrease to $V_{CC(OFF)}$. However, if the bias assist function is always activated during steady-state operation including standby mode, the power loss increases. Therefore, the VCC pin voltage should be more than $V_{CC(BIAS)}$, for example, by adjusting the turns ratio of the auxiliary winding and the secondary-side winding and/or reducing the value of R2 in Figure 11-2 (see Section 11.1).

10.9 Step Drive Control

Figure 10-10 shows a flyback control circuit. The both end of secondary rectification diode (D51) is generated surge voltage when a power MOSFET turns on. Thus, V_{RM} of D51 should be set in consideration of the surge.

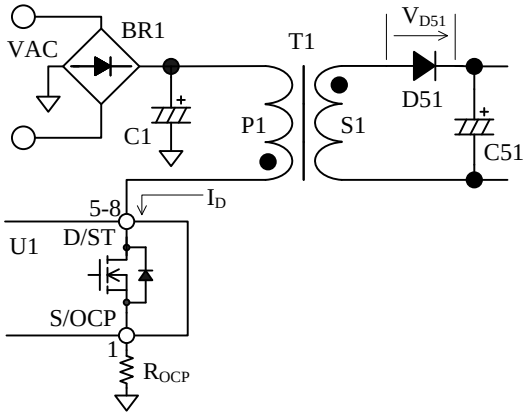

Figure 10-10. Flyback Control Circuit

The IC optimally controls the gate drive of the internal power MOSFET (Step drive control) depending on the load condition. The step drive control reduces the surge voltage of D51 when the power MOSFET turns on (See Figure 10-11). Since V_{RM} of D51 can be set to lower value than usual, the price reduction and the increasing circuit efficiency are achieved by using a diode of low V_F.

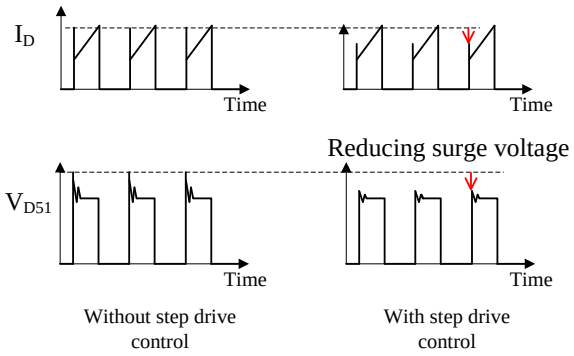

Figure 10-11. I_D and V_{D51} Waveforms

10.10 Overcurrent Protection (OCP)

10.10.1OCP Operation

The overcurrent protection (OCP) detects each drain peak current level of a power MOSFET on pulse-by-pulse basis, and limits the output power when the current level reaches to OCP threshold voltage.

During the leading edge blanking time, the OCP threshold voltage becomes $V_{OCP(LEB)}$ = 1.69 V which is higher than the normal OCP threshold voltage as shown in Figure 10-12. Changing to this threshold voltage prevents the IC from responding to the surge voltage in

© SANKEN ELECTRIC CO., LTD. 2016

turning-on the power MOSFET. This function operates as protection at the condition such as output windings shorted or unusual withstand voltage of secondary-side rectifier diodes.

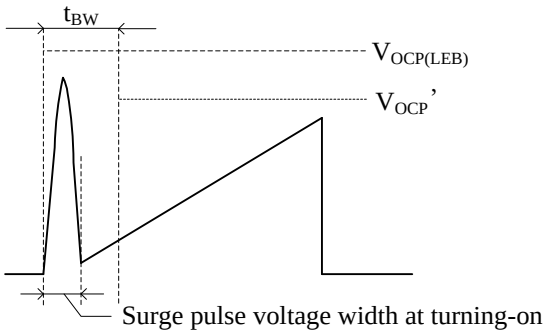

Figure 10-12. S/OCP Pin Voltage

When the power MOSFET turns on, the surge voltage width of the S/OCP pin should be less than t_{BW}, as shown in Figure 10-12. In order to prevent surge voltage, pay extra attention to R_{OCP} trace layout (see Section 11.2). In addition, if a C (RC) damper snubber of Figure 10-13 is used, reduce the capacitor value of damper snubber.

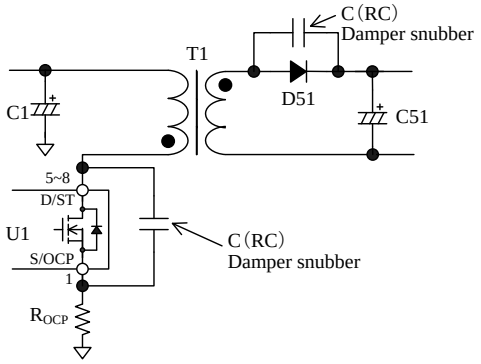

Figure 10-13. Damper Snubber

10.10.2OCP Input Compensation Function

ICs with PWM control usually have some propagation delay time. The steeper the slope of the actual drain current at a high AC input voltage is, the larger the detection voltage of actual drain peak current is, compared to V_{OCP}. Thus, the peak current has some variation depending on AC input voltage in OCP state. In order to reduce the variation of peak current in OCP state, the IC has Input Compensation Function.

This function corrects OCP threshold voltage depending on the AC input voltage, as shown in Figure 10-14.

When the AC input voltage is low (Duty cycle is broad), the OCP threshold voltage is controlled to become high. The difference of peak drain current become small compared with the case where the AC input voltage is high (Duty cycle is narrow).

The compensation signal depends on the duty cycle. The relation between the duty cycle and the OCP threshold voltage after compensation V_{OCP}' is expressed as Equation (3). When duty cycle is broader than 36 %, the V_{OCP}' becomes a constant value $V_{OCP(H)}$ = 0.888 V

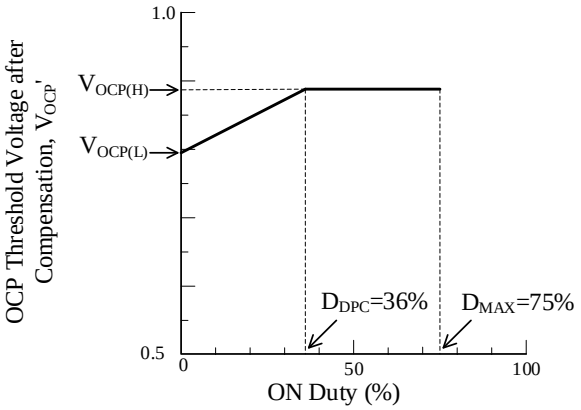

Figure 10-14. Relationship between Duty Cycle and Drain Current Limit after Compensation

$$V_{OCP}' = V_{OCP(L)} + DPC \times ONTime$$

$$= V_{OCP(L)} + DPC \times \frac{Duty}{f_{OSC(AVG)}} \quad (3)$$

where,
$V_{OCP(L)}$: OCP Threshold Voltage at Zero Duty Cycle (V)
DPC: OCP Compensation Coefficient (mV/μs)
ONTime: On-time of power MOSFET (μs)
Duty: Duty cycle of power MOSFET (%)
$f_{OSC(AVG)}$: Average PWM Switching Frequency (kHz)

10.10.3Overload Protection (OLP)

Figure 10-15 shows the FB/OLP pin peripheral circuit, and Figure 10-16 shows each waveform for the overload protection (OLP) operation.

When the peak drain current of I_D is limited by the overload protection, the output voltage, V_{OUT}, decreases and the feedback current from the secondary photo-coupler becomes zero. Thus, the feedback current, I_{FB}, charges C3 connected to the FB/OLP pin and FB/OLP pin voltage increases. When the FB/OLP pin voltage increases to $V_{FB(OLP)}$ = 7.3 V or more for the OLP delay time, t_{OLP} = 75 ms or more, the OLP is activated, the IC stops switching operation.

During OLP operation, the intermittent operation by VCC pin voltage repeats and reduces the stress of parts such as a power MOSFET and secondary side rectifier

© SANKEN ELECTRIC CO., LTD. 2016

diodes.

When the OLP is activated, the IC stops switching operation, and the VCC pin voltage decreases.

During OLP operation, the bias assist function is disabled. When the VCC pin voltage decreases to $V_{CC(OFF)SKP}$ (about 9 V), the startup current flows, and the VCC pin voltage increases. When the VCC pin voltage increases to $V_{CC(ON)}$, the IC starts operation, and the circuit current increases. After that, the VCC pin voltage decreases. When the VCC pin voltage decreases to $V_{CC(OFF)}$ = 8.5 V, the control circuit stops operation.

Skipping the UVLO operation of $V_{CC(OFF)}$ (see Section 10.2), the intermittent operation makes the non-switching interval longer and restricts the temperature rise of the power MOSFET.

When the abnormal condition is removed, the IC returns to normal operation automatically.

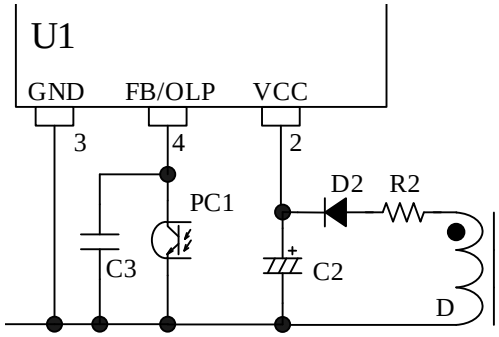

Figure 10-15. FB/OLP Pin Peripheral Circuit

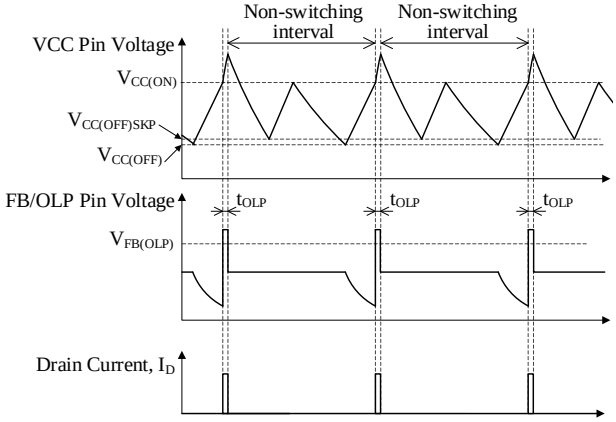

Figure 10-16. OLP Operational Waveforms

10.10.4Overvoltage Protection (OVP)

When a voltage between the VCC pin and the GND pin increases to $V_{CC(OVP)}$ = 29.1 V or more, the overvoltage protection (OVP) is activated. The IC has two operation types of OVP. One is latched shutdown. The other is auto-restart.

When VCC pin voltage is provided by using auxiliary winding of transformer, the VCC pin voltage is proportional to output voltage. Thus, the VCC pin can detect the overvoltage conditions such as output voltage detection circuit open. The approximate value of output voltage $V_{OUT(OVP)}$ in OVP condition is calculated by using Equation (4).

$$V_{OUT(OVP)} = \frac{V_{OUT(NORMAL)}}{V_{CC(NORMAL)}} \times 29.1 \text{ (V)} \quad (4)$$

where,

$V_{OUT(NORMAL)}$: Output voltage in normal operation

$V_{CC(NORMAL)}$: VCC pin voltage in normal operation

- **Latched Shutdown type: STR3A461HL**

When the OVP is activated, the IC stops switching operation at the latched state. In order to keep the latched state, when VCC pin voltage decreases to $V_{CC(BIAS)}$, the bias assist function is activated, and the VCC pin voltage is kept to over the $V_{CC(OFF)}$.

Releasing the latched state is done by turning off the input voltage and by dropping the VCC pin voltage below $V_{CC(OFF)}$.

- **Auto-Restart Type: STR3A46×HDL**

When the OVP is activated, the IC stops switching operation. During OVP operation, the bias assist function is disabled, the intermittent operation by the UVLO is repeated (refer to Section 10.10.3). When the fault condition is removed, the IC returns to normal operation automatically (refer to Figure 10-17).

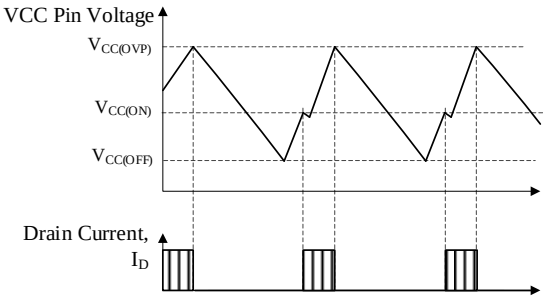

Figure 10-17. OVP Operational Waveforms

10.10.5Thermal Shutdown (TSD)

When the temperature of control circuit increases to $T_{J(TSD)}$ = 145 °C or more, the thermal shutdown (TSD) is activated. The IC has two operation types of TSD. One is latched shutdown, the other is auto-restart.

- **Latched Shutdown type: STR3A461HL**

When TSD is activated, the IC stops switching operation at the latched state. In order to keep the latched state, when VCC pin voltage decreases to $V_{CC(BIAS)}$, the

© SANKEN ELECTRIC CO., LTD. 2016

bias assist function is activated, and the VCC pin voltage is kept to over $V_{CC(OFF)}$.
Releasing the latched state is done by turning off the input voltage and by dropping the VCC pin voltage below $V_{CC(OFF)}$.

- **Auto-Restart Type: STR3A46×HDL**

Figure 10-18 shows the TSD operational waveforms. TSD has the thermal hysteresis.

When TSD is activated, and the IC stops switching operation. After that, VCC pin voltage decreases. When the VCC pin voltage decreases to $V_{CC(BIAS)}$, the bias assist function is activated and the VCC pin voltage is kept to over the $V_{CC(OFF)}$.

When T_J decreases to less than $T_{J(TSD)}-T_{J(TSD)HYS}$, the bias assist function is disabled and the VCC pin voltage decreases to $V_{CC(OFF)}$. At that time, the IC stops operation and reverts to the state before startup. After that, the startup circuit is activated, the VCC pin voltage increases to $V_{CC(ON)}$, and the IC starts switching operation again.

In this way, the intermittent operation by the TSD and the UVLO is repeated while there is an excess thermal condition.

When the fault condition is removed and T_J decreases to less than $T_{J(TSD)}-T_{J(TSD)HYS}$, the IC returns to normal operation automatically.

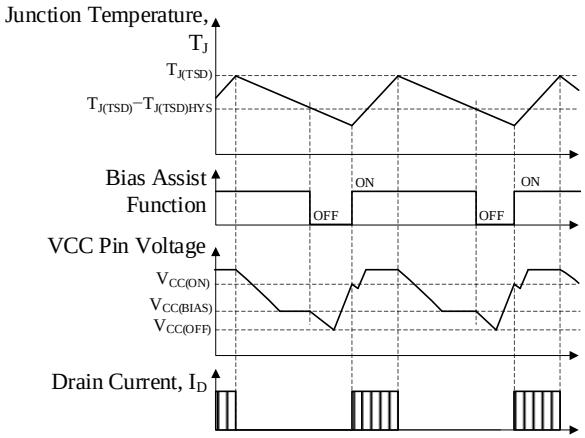

Figure 10-18. TSD Operational Waveforms

11. Design Notes

11.1 External Components

Take care to use properly rated, including derating as necessary and proper type of components.

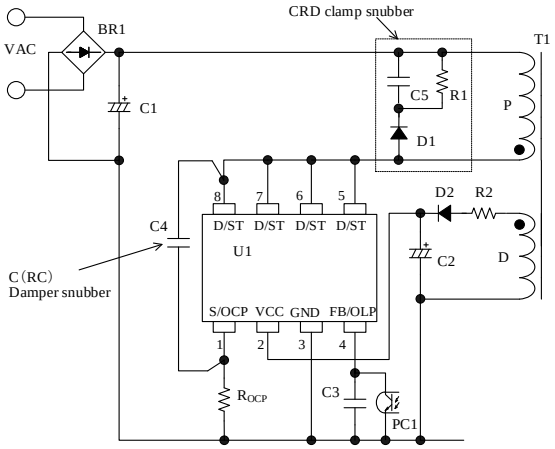

Figure 11-1. IC Peripheral Circuit

11.1.1 Input and Output Electrolytic Capacitor

Apply proper derating to ripple current, voltage, and temperature rise. Use of high ripple current and low impedance types, designed for switch mode power supplies, is recommended.

11.1.2 S/OCP Pin Peripheral Circuit

In Figure 11-1, R_{OCP} is the resistor for the current detection. Since high frequency switching current flows to R_{OCP}, choose the resistor of low inductance and high power dissipation capability.

11.1.3 VCC Pin Peripheral Circuit

The value of C2 in Figure 11-1 is generally recommended to be 10 µF to 47 µF (see Section 10.1, because the startup time is determined by the value of C2)

In actual power supply circuits, there are cases in which the VCC pin voltage fluctuates in proportion to the output current, I_{OUT} (see Figure 11-2), and the overvoltage protection (OVP) on the VCC pin may be activated. This happens because C2 is charged to a peak voltage on the auxiliary winding D, which is caused by the transient surge voltage coupled from the primary winding when the power MOSFET turns off. For alleviating C2 peak charging, it is effective to add some value R2, of several tenths of ohms to several ohms, in series with D2 (see Figure 11-1). The optimal value of R2 should be determined using a transformer matching what will be used in the actual application, because the variation of the auxiliary winding voltage is affected by the transformer structural design.

© SANKEN ELECTRIC CO., LTD. 2016

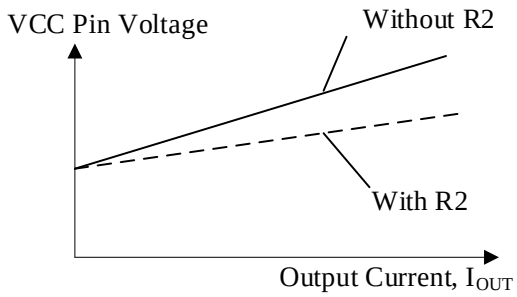

Figure 11-2. Variation of VCC Pin Voltage and Power

11.1.4 FB/OLP Pin Peripheral Circuit

C3 (see Figure 11-1) is for high frequency noise rejection and phase compensation, and should be connected close to the FB/OLP pin and the GND pin. The value of C3 is recommended to be about 2200 pF to 0.01 µF, and should be selected based on actual operation in the application.

11.1.5 Snubber Circuit

In case the serge voltage of V_{DS} is large, the circuit should be added as follows (see Figure 11-1);

- A clamp snubber circuit of a capacitor-resistor- diode (CRD) combination should be added on the primary winding P.
- A damper snubber circuit of a capacitor (C) or a resistor-capacitor (RC) combination should be added between the D/ST pin and the S/OCP pin.
  In case the damper snubber circuit is added, this components should be connected near D/ST pin and S/OCP pin.

11.1.6 Peripheral Circuit of Secondary-side Shunt Regulator

Figure 11-3 shows the secondary-side detection circuit with the standard shunt regulator IC (U51).

C52 and R53 are for phase compensation. The value of C52 and R53 are recommended to be around 0.047 µF to 0.47 µF and 4.7 kΩ to 470 kΩ, respectively. They should be selected based on actual operation in the application.

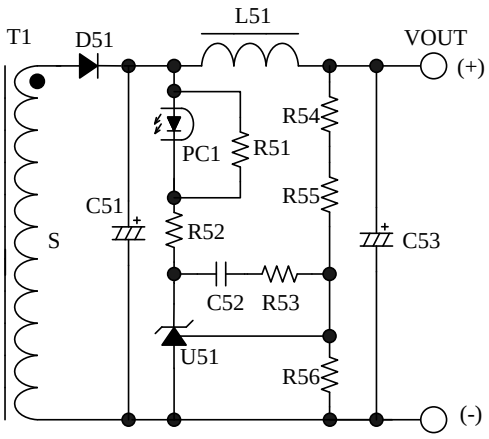

Figure 11-3. Peripheral Circuit of Secondary-side Shunt Regulator (U51)

11.1.7 Transformer

Apply proper design margin to core temperature rise by core loss and copper loss.
Because the switching currents contain high frequency currents, the skin effect may become a consideration.
Choose a suitable wire gauge in consideration of the RMS current and a current density of 4 to 6 A/mm^2.
If measures to further reduce temperature are still necessary, the following should be considered to increase the total surface area of the wiring:

- Increase the number of wires in parallel.
- Use litz wires.
- Thicken the wire gauge.

In the following cases, the surge of VCC pin voltage becomes high.

- The surge voltage of primary main winding, P, is high (low output voltage and high output current power supply designs)
- The winding structure of auxiliary winding, D, is susceptible to the noise of winding P.

When the surge voltage of winding D is high, the VCC pin voltage increases and the overvoltage protection (OVP) may be activated. In transformer design, the following should be considered;

- The coupling of the winding P and the secondary output winding S should be maximized to reduce the leakage inductance.
- The coupling of the winding D and the winding S should be maximized.
- The coupling of the winding D and the winding P should be minimized.

In the case of multi-output power supply, the coupling of the secondary-side stabilized output winding, S1, and the others (S2, S3···) should be maximized to improve the

© SANKEN ELECTRIC CO., LTD. 2016

line-regulation of those outputs

Figure 11-4 shows the winding structural examples of two outputs.

- Winding structural example (a):
  S1 is sandwiched between P1 and P2 to maximize the coupling of them for surge reduction of P1 and P2. D is placed far from P1 and P2 to minimize the coupling to the primary for the surge reduction of D.

- Winding structural example (b)
  P1 and P2 are placed close to S1 to maximize the coupling of S1 for surge reduction of P1 and P2.。
  D and S2 are sandwiched by S1 to maximize the coupling of D and S1, and that of S1 and S2. This structure reduces the surge of D, and improves the line-regulation of outputs.

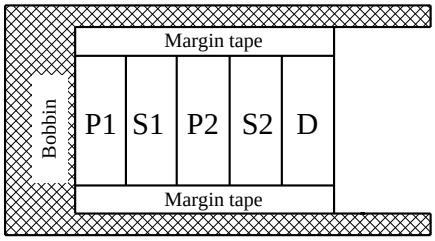

Winding structural example (a)

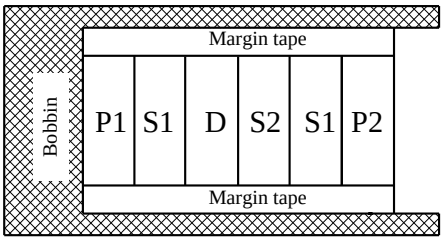

Winding structural example (b)

Figure 11-4. Winding Structural Examples

11.2 PCB Trace Layout and Component Placement

Since the PCB circuit trace design and the component layout significantly affects operation, EMI noise, and power dissipation, the high frequency PCB trace should be low impedance with small loop and wide trace. In addition, the ground traces affect radiated EMI noise, and wide, short traces should be taken into account.

Figure 11-5 shows the circuit design example.

(1) Main Circuit Trace Layout
This is the main trace containing switching currents, and thus it should be as wide trace and small loop as possible.
If C1 and the IC are distant from each other, placing a capacitor such as film capacitor (about 0.1 μF and with proper voltage rating) close to the transformer or the IC is recommended to reduce impedance of the high frequency current loop.

(2) Control Ground Trace Layout
Since the operation of the IC may be affected from the large current of the main trace that flows in control ground trace, the control ground trace should be separated from main trace and connected at a single point grounding of point A in Figure 11-5 as close to the R_{OCP} pin as possible.

(3) VCC Trace Layout:
This is the trace for supplying power to the IC, and thus it should be as small loop as possible. If C2 and the IC are distant from each other, placing a capacitor such as film capacitor C_f (about 0.1 μF to 1.0 μF) close to the VCC pin and the GND pin is recommended.

(4) R_{OCP} Trace Layout
R_{OCP} should be placed as close as possible to the S/OCP pin. The connection between the power ground of the main trace and the IC ground should be at a single point ground (point A in Figure 11-5) which is close to the base of R_{OCP}.

(5) FB/OLP Trace Layout
The components connected to FB/OLP pin should be as close to FB/OLP pin as possible. The trace between the components and FB/OLP pin should be as short as possible.

(6) Secondary Rectifier Smoothing Circuit Trace Layout:
This is the trace of the rectifier smoothing loop, carrying the switching current, and thus it should be as wide trace and small loop as possible. If this trace is thin and long, inductance resulting from the loop may increase surge voltage at turning off the power MOSFET. Proper rectifier smoothing trace layout helps to increase margin against the power MOSFET breakdown voltage, and reduces stress on the clamp snubber circuit and losses in it.

(7) Thermal Considerations
Because the power MOSFET has a positive thermal coefficient of $R_{DS(ON)}$, consider it in thermal design.
Since the copper area under the IC and the D/ST pin trace act as a heatsink, its traces should be as wide as possible.

© SANKEN ELECTRIC CO., LTD. 2016

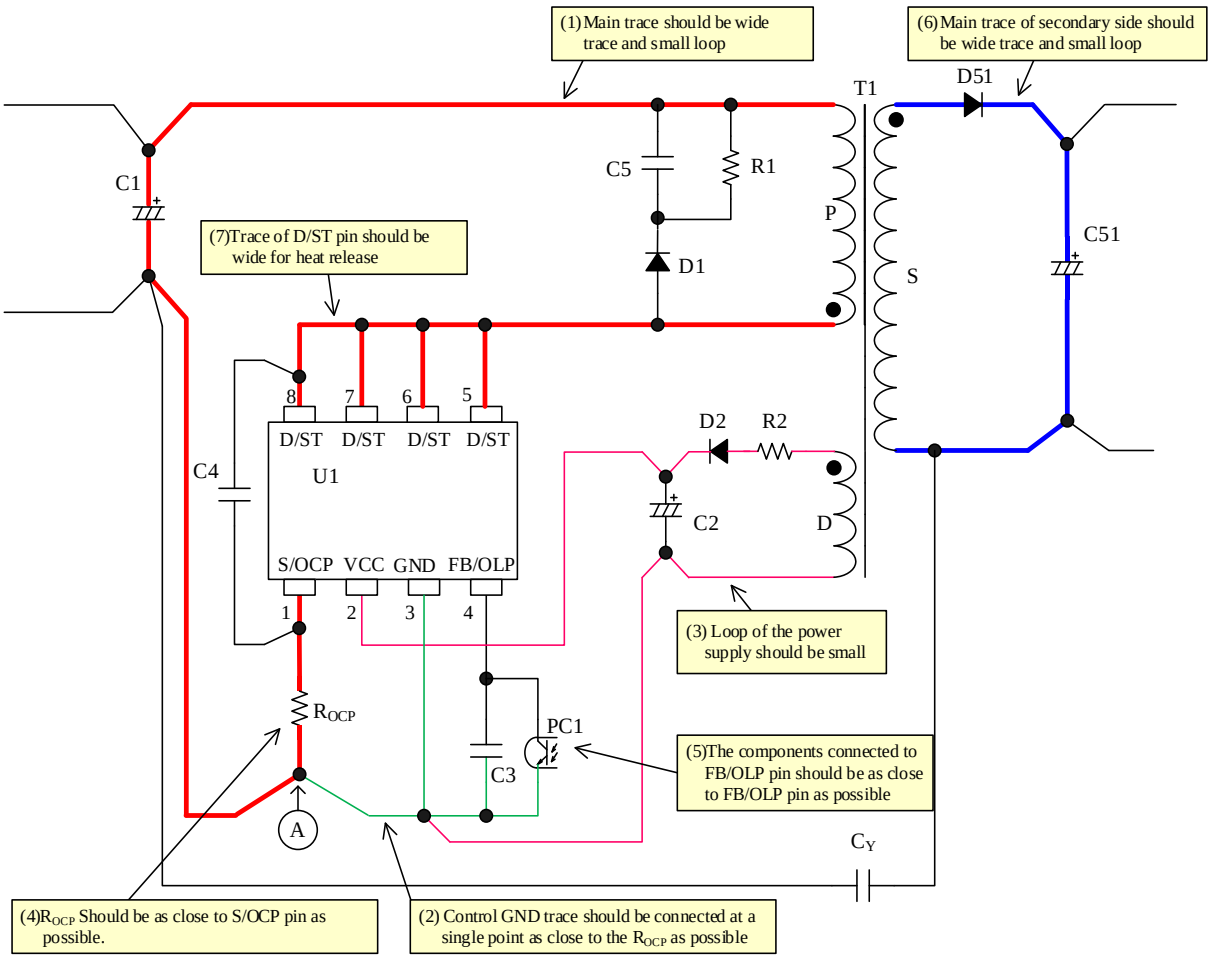

Figure 11-5. Peripheral Circuit Example Around IC

© SANKEN ELECTRIC CO., LTD. 2016

12. Pattern Layout Example

The following show the two outputs PCB pattern layout example and the schematic of circuit using STR3A46xHL/HDL series. The PCB pattern layout example is made usable to other ICs in common. The parts in Figure 12-2 are only used.

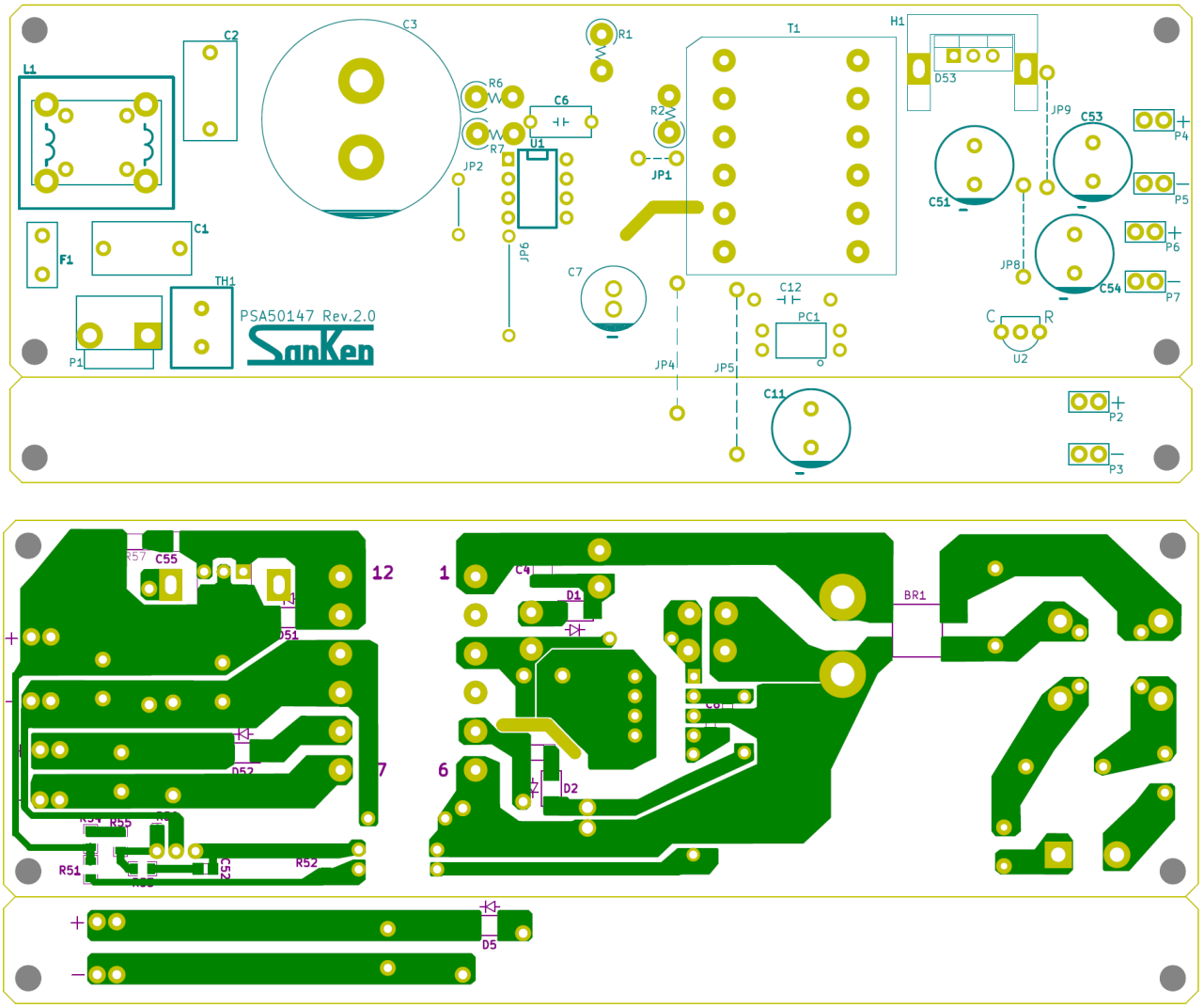

Figure 12-1. PCB Circuit Layout Example

© SANKEN ELECTRIC CO., LTD. 2016

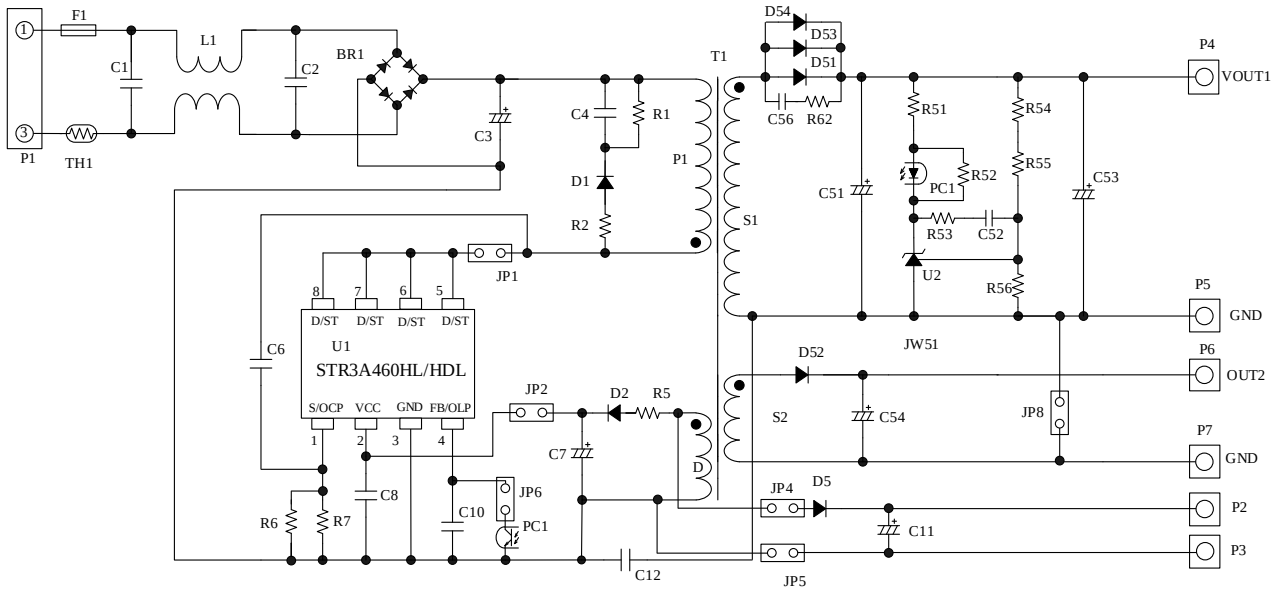

Figure 12-2. Circuit Schematic for PCB Circuit Layout

13. Reference Design of Power Supply

As an example, the following show the power supply specification, the circuit schematic, the bill of materials, and the transformer specification.

- Power Supply Specification

IC	STR3A463HDL
Input voltage	85VAC to 265VAC
Maximum output power	34.8 W (40.4 W peak)
Output 1	14 V / 2.2 A (2.6 A peak)
Output 2	8 V / 0.5 A

- Circuit Schematic
  See Figure 12-2

© SANKEN ELECTRIC CO., LTD. 2016

● Bill of Materials

Symbol	Part type	Ratings[1]	Recommended Sanken Parts	Symbol	Part type	Ratings[1]	Recommended Sanken Parts
F1	Fuse	AC 250 V, 3 A		BR1	General	1000 V, 1.5 A	
L1[2]	CM inductor	10 mH		L51	Inductor	Short	
TH1[2]	NTC thermistor	Short		D51		Open	
D1	General	800 V, 1.2 A	SARS01	D52	Schottky	60 V, 1.5 A	SJPB-H6
D2	Fast recovery	200 V, 1 A	SJPL-D2	D53	Schottky	100V, 10A	FMEN-210A
D5	Fast recovery	Open		D54		Open	
C1[2]	Film, X2	0.1 µF, 275 V		C51[2]	Electrolytic	680 µF, 25 V	
C2[2]	Electrolytic	Open		C52[2]	Ceramic	0.1 µF, 50 V	
C3	Electrolytic	100 µF, 450 V		C53[2]	Electrolytic	680 µF, 25 V	
C4	Ceramic	1000 pF, 2 kV		C54	Electrolytic	470 µF, 16 V	
C6[2]	Ceramic	15 pF, 2 kV		C56[2]	Ceramic	Open	
C7	Electrolytic	22 µF, 50 V		R51	General	1.8 kΩ	
C8[2]	Ceramic	Open		R52	General	1.5 kΩ	
C10[2]	Ceramic	2200 pF		R53[2]	General	10 kΩ	
C11	Electrolytic	Open		R54[2]	General	6.8 kΩ	
C12	Ceramic, Y1	2200 pF, 250 V		R55	General, 1%	39 kΩ	
R1[3]	Metal oxide	330 kΩ, 1 W		R56	General, 1%	10 kΩ	
R2[2]	General	47 Ω, 1 W		JP1		Short	
R5[2]	General	10 Ω		JP2		Short	
R6[2]	General	0.56Ω, 1 W		JP4		Open	
R7[2]	General	Open		JP5		Open	
PC1	Photo-coupler	PC123 or equiv		JP6		Short	
U1	IC	—		JP8		Short	
T1	Transformer	See the specification		U2	Shunt regulator	V_{REF} = 2.5 V TL431or equiv	

[1] Unless otherwise specified, the voltage rating of capacitor is 50 V or less and the power rating of resistor is 1/8 W or less.
[2] It is necessary to be adjusted based on actual operation in the application.
[3] Resistors applied high DC voltage and of high resistance are recommended to select resistors designed against electromigration or use combinations of resistors in series to reduce applied voltage to each of them, according to the requirement of the application.

© SANKEN ELECTRIC CO., LTD. 2016

● Transformer Specification
Primary inductance, L_P: 460 µH
Core size: EER-28S
Al-value: 373 nH/N^2 (Center gap of about 0.25 mm)
Winding specification

Winding	Symbol	Number of turns (T)	Wire diameter (mm)	Construction
Primary winding	P1	18	φ 0.30	Single-layer, solenoid winding
Primary winding	P2	18	φ 0.30	Single-layer, solenoid winding
Auxiliary winding	D	6	φ 0.20	Space winding
Output 1 winding	S1-1	2	φ 0.4 × 2	Solenoid winding
Output 1 winding	S1-2	2	φ 0.4 × 2	Solenoid winding
Output 2 winding	S2-1	3	φ 0.4 × 2	Solenoid winding
Output 2 winding	S2-2	3	φ 0.4 × 2	Solenoid winding

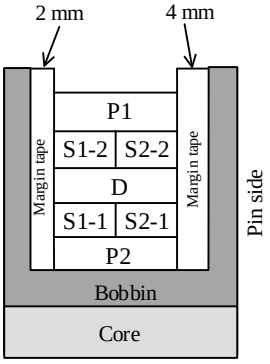

Cross-section view

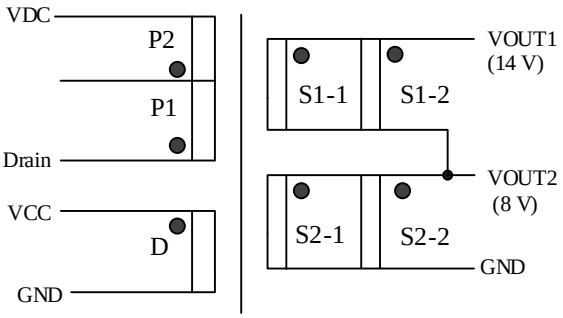

●: Start at this pin

© SANKEN ELECTRIC CO., LTD. 2016

Important Notes

- All data, illustrations, graphs, tables and any other information included in this document (the "Information") as to Sanken's products listed herein (the "Sanken Products") are current as of the date this document is issued. The Information is subject to any change without notice due to improvement of the Sanken Products, etc. Please make sure to confirm with a Sanken sales representative that the contents set forth in this document reflect the latest revisions before use.
- The Sanken Products are intended for use as components of general purpose electronic equipment or apparatus (such as home appliances, office equipment, telecommunication equipment, measuring equipment, etc.). Prior to use of the Sanken Products, please put your signature, or affix your name and seal, on the specification documents of the Sanken Products and return them to Sanken. When considering use of the Sanken Products for any applications that require higher reliability (such as transportation equipment and its control systems, traffic signal control systems or equipment, disaster/crime alarm systems, various safety devices, etc.), you must contact a Sanken sales representative to discuss the suitability of such use and put your signature, or affix your name and seal, on the specification documents of the Sanken Products and return them to Sanken, prior to the use of the Sanken Products. The Sanken Products are not intended for use in any applications that require extremely high reliability such as: aerospace equipment; nuclear power control systems; and medical equipment or systems, whose failure or malfunction may result in death or serious injury to people, i.e., medical devices in Class III or a higher class as defined by relevant laws of Japan (collectively, the "Specific Applications"). Sanken assumes no liability or responsibility whatsoever for any and all damages and losses that may be suffered by you, users or any third party, resulting from the use of the Sanken Products in the Specific Applications or in manner not in compliance with the instructions set forth herein.
- In the event of using the Sanken Products by either (i) combining other products or materials or both therewith or (ii) physically, chemically or otherwise processing or treating or both the same, you must duly consider all possible risks that may result from all such uses in advance and proceed therewith at your own responsibility.
- Although Sanken is making efforts to enhance the quality and reliability of its products, it is impossible to completely avoid the occurrence of any failure or defect or both in semiconductor products at a certain rate. You must take, at your own responsibility, preventative measures including using a sufficient safety design and confirming safety of any equipment or systems in/for which the Sanken Products are used, upon due consideration of a failure occurrence rate and derating, etc., in order not to cause any human injury or death, fire accident or social harm which may result from any failure or malfunction of the Sanken Products. Please refer to the relevant specification documents and Sanken's official website in relation to derating.
- No anti-radioactive ray design has been adopted for the Sanken Products.
- The circuit constant, operation examples, circuit examples, pattern layout examples, design examples, recommended examples, all information and evaluation results based thereon, etc., described in this document are presented for the sole purpose of reference of use of the Sanken Products.
- Sanken assumes no responsibility whatsoever for any and all damages and losses that may be suffered by you, users or any third party, or any possible infringement of any and all property rights including intellectual property rights and any other rights of you, users or any third party, resulting from the Information.
- No information in this document can be transcribed or copied or both without Sanken's prior written consent.
- Regarding the Information, no license, express, implied or otherwise, is granted hereby under any intellectual property rights and any other rights of Sanken.
- Unless otherwise agreed in writing between Sanken and you, Sanken makes no warranty of any kind, whether express or implied, including, without limitation, any warranty (i) as to the quality or performance of the Sanken Products (such as implied warranty of merchantability, or implied warranty of fitness for a particular purpose or special environment), (ii) that any Sanken Product is delivered free of claims of third parties by way of infringement or the like, (iii) that may arise from course of performance, course of dealing or usage of trade, and (iv) as to the Information (including its accuracy, usefulness, or reliability).
- In the event of using the Sanken Products, you must use the same after carefully examining all applicable environmental laws and regulations that regulate the inclusion or use or both of any particular controlled substances, including, but not limited to, the EU RoHS Directive, so as to be in strict compliance with such applicable laws and regulations.
- You must not use the Sanken Products or the Information for the purpose of any military applications or use, including but not limited to the development of weapons of mass destruction. In the event of exporting the Sanken Products or the Information, or providing them for non-residents, you must comply with all applicable export control laws and regulations in each country including the U.S. Export Administration Regulations (EAR) and the Foreign Exchange and Foreign Trade Act of Japan, and follow the procedures required by such applicable laws and regulations.
- Sanken assumes no responsibility for any troubles, which may occur during the transportation of the Sanken Products including the falling thereof, out of Sanken's distribution network.
- Although Sanken has prepared this document with its due care to pursue the accuracy thereof, Sanken does not warrant that it is error free and Sanken assumes no liability whatsoever for any and all damages and losses which may be suffered by you resulting from any possible errors or omissions in connection with the Information.
- Please refer to our official website in relation to general instructions and directions for using the Sanken Products, and refer to the relevant specification documents in relation to particular precautions when using the Sanken Products.
- All rights and title in and to any specific trademark or tradename belong to Sanken and such original right holder(s).

DSGN-CEZ-16003

© SANKEN ELECTRIC CO., LTD. 2016

ENTEGRECİ

Bu belge www.entegreci.com üzerinden sunulmaktadır.

Elektronik komponent tedarikinde Entegreci

Entegreci, Eskişehir merkezli, Türkiye geneline satış yapan bir elektronik komponent mağazasıdır. Entegreler (IC), mikrodenetleyiciler, transistörler, diyotlar, pasif elemanlar, konnektörler, modüller ve geliştirme kartları tek adetten seri üretim adetlerine kadar satılır. Ürün sayfalarında güncel stok durumunu, fiyatı ve datasheet bağlantısını bulabilirsiniz.

Parça koduyla arama

Üretici parça numarasını yazın; stok ve fiyatı hemen görün.

www.entegreci.com

Ürün kategorileri

Entegreden kapasitöre tüm elektronik komponent kategorileri.

Kategorilere göz atın

Üreticiler

Aradığınız üreticinin ürünlerini tek sayfada inceleyin.

Üreticileri görün

Toplu alım ve teklif

Listede olmayan ya da yüksek adetli parçalar için teklif isteyin.

Teklif isteyin

www.entegreci.com | **destek@entegreci.com** | **0850 305 90 34**

Entegreci is an online electronic components store based in Türkiye. Search by manufacturer part number to see stock, prices and datasheets for integrated circuits, microcontrollers, transistors, passive components and connectors, or request a quote for parts that are not listed.

Bu sayfa Entegreci tarafından eklenmiştir. Belgenin önceki sayfaları asıl yayıncısına aittir ve içeriği değiştirilmemiştir; en güncel sürüm için belgenin yayıncısına başvurun.