Low height and Creeping distance of 4mm or longer
650 V, 1.9 Ω, PWM Off-Line Switching Regulator IC

STR-V653

April 25, 2013

General Descriptions

The STR-V653 is a power IC for switching power supplies, incorporating a power MOSFET and a current mode PWM controller IC in one package.

The SIP8L full mold package features low height and creeping distance of 4mm or longer between high and low voltage pin bases.

To achieve low power consumption, the product includes a startup circuit and a standby function in the controller.

The switching modes are automatically changed according to load conditions so that the PWM mode is in normal operation and the burst mode is in light load condition.

The rich set of protection features helps to realize low component counts, and high performance-to-cost power supply.

Package

SIP8L

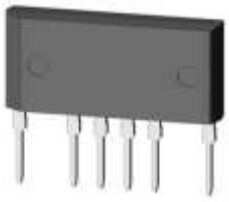

Features

- SIP8L package (2.54 pitch, straight lead): Creeping distance of 4mm or longer between high voltage and low voltage pin bases. Low height of less than 12 mm from PCB (Printed Circuit Board)
- Current mode PWM control
- Auto Standby function: improves efficiency by burst mode operation in light load
  - Normal operation: PWM mode
  - Light load operation: Burst mode
- No load power consumption < 25 mW
- Brown-In and Brown-Out function: auto-restart, prevents excess input current and heat rise at low input voltage
- Random Switching function: reduces EMI noise, and simplifies EMI filters
- Slope Compensation function: avoids subharmonic oscillation
- Leading Edge Blanking function
- High Speed Latch Release function
- Protection features
  - Overcurrent Protection function (OCP): pulse-by-pulse, with input compensation function
  - Overvoltage Protection function (OVP): latched shutdown
  - Overload Protection function (OLP): auto-restart, with timer
  - Thermal Shutdown function (TSD): latched shutdown

Electrical Characteristics

- Operation Frequency, $f_{OSC(AVG)}$ (typ) = 67 kHz
- Power MOSFET
  V_{DSS} (min) = 650 V
  $R_{DS(ON)}$ (max) = 1.9 Ω

Applications

- Standby power supply
- Home appliances
- Digital appliances
- Office automation (OA) equipment
- Industrial apparatus
- Communication facilities

Typical Application circuit

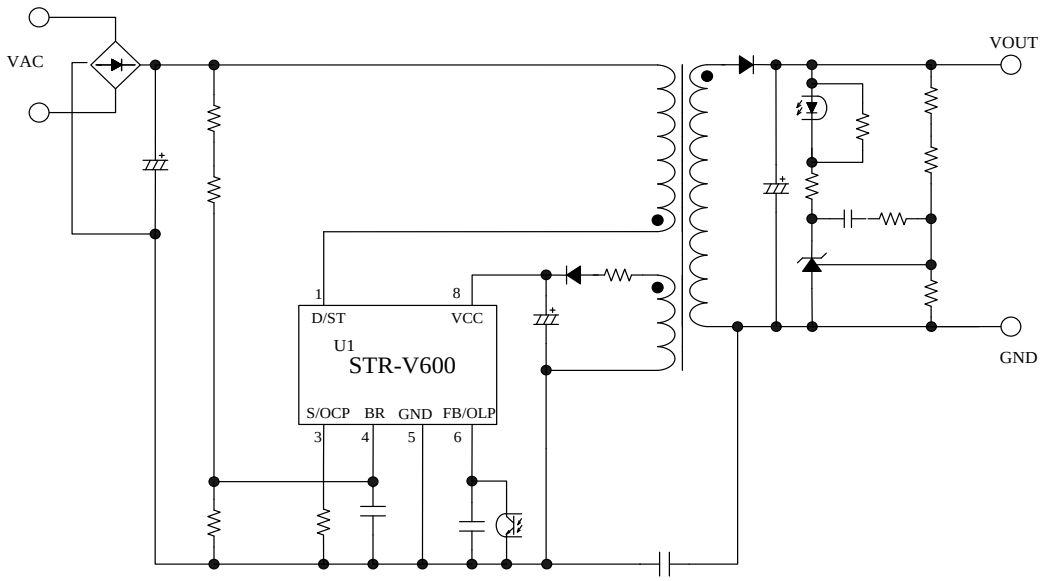

Absolute Maximum Ratings

- The polarity value for current specifies a sink as "+," and a source as "−," referencing the IC.
- Unless otherwise specified, Ta=25°C

Characteristic	Pins	Symbol	Rating	Unit	Notes
Drain Peak Current (1)	1 − 3	I_{DPEAK}	6.7	A	Single pulse
Avalanche Energy (2)	1 − 3	E_{AS}	99	mJ	Single pulse V_{DD}=99V,L=20mH
		I_{LPEAK}	2.9	A	
S/OCP Pin Voltage	3 − 5	V_{OCP}	−2 to 6	V	
Control Part Input Voltage	8 − 5	V_{CC}	32	V	
FB/OLP Pin Voltage	6 − 5	V_{FB}	−0.3 to 14	V	
FB/OLP Pin Sink Current	6 − 5	I_{FB}	1.0	mA	
BR Pin Voltage	4 − 5	V_{BR}	−0.3 to 7	V	
BR Pin Sink Current	4 − 5	I_{BR}	1.0	mA	
Power Dissipation of MOSFET (3)	1 − 3	P_{D1}	10.8	W	With infinite heat sink
			1.6	W	Without heat sink
Power Dissipation of Control Part	8 − 5	P_{D2}	1.2	W	
Operating Ambient Temperature	−	T_{op}	−30 to +125	°C	
Storage Temperature	−	T_{stg}	−40 to +125	°C	
Channel Temperature	−	T_{ch}	+150	°C	

(1) Refer to MOSFET Safe Operating Area Curve
(2) Refer to MOSFET Avalanche Energy Derating Coefficient Curve
(3) Refer to MOSFET Temperature versus Power Dissipation Curve

Electrical characteristics of Control Part

- The polarity value for current specifies a sink as "+," and a source as "−," referencing the IC.
- Unless otherwise specified, Ta is 25 °C, V_{CC} is 18 V

Characteristic	Pins	Symbol	Min.	Typ.	Max.	Unit	Notes
Operation Start Voltage	8 − 5	$V_{CC(ON)}$	13.8	15.3	16.8	V	
Operation Stop Voltage (1)	8 − 5	$V_{CC(OFF)}$	7.3	8.1	8.9	V	
Circuit Current in Operation	8 − 5	$I_{CC(ON)}$	−	−	4	mA	V_{CC}=12V
Minimum Startup Voltage	8 − 5	$V_{ST(ON)}$	−	38	−	V	
Startup Current	8 − 5	$I_{STARTUP}$	−3.7	−2.5	−1.5	mA	
Startup Current Supply Threshold Biasing Voltage (1)	8 − 5	$V_{CC(BIAS)}$	8.5	9.5	10.5	V	
Frequency Modulation Deviation	1 − 5	$f_{OSC(AVE)}$	60	67	74	kHz	
Oscillation Frequency Fluctuation Range	1 − 5	Δf	−	5	−	kHz	
Maximum Duty Cycle	1 − 5	D_{MAX}	77	83	89	%	
Minimum On-time	−	$t_{ON(MIN)}$	−	550	−	ns	
Leading Edge Blanking Time	−	t_{BW}	−	330	−	ns	
OCP Compensation Coefficient	−	DPC	−	20	−	mV/μs	
OCP Compensation Duty Cycle Limit	−	D_{DPC}	−	36	−	%	

Characteristic	Pins	Symbol	Min.	Typ.	Max.	Unit	Notes
OCP Threshold Voltage at Zero Duty Cycle	3 − 5	$V_{OCP(L)}$	0.70	0.78	0.86	V	
OCP Threshold Voltage at 36% Duty Cycle	3 − 5	$V_{OCP(H)}$	0.81	0.90	0.99	V	
Maximum Feedback Current	6 − 5	$I_{FB(MAX)}$	−340	−230	−150	µA	
Minimum Feedback Current	6 − 5	$I_{FB(MIN)}$	−30	−15	−7	µA	
FB/OLP Pin Oscillation Stop Threshold Voltage	6 − 5	$V_{FB(OFF)}$	0.85	0.95	1.05	V	
OLP Threshold Voltage	6 − 5	$V_{FB(OLP)}$	7.3	8.1	8.9	V	
OLP Delay Time	6 − 5	t_{OLP}	54	68	82	ms	
OLP Operation Current	8 − 5	$I_{CC(OLP)}$	−	300	600	µA	
FB/OLP Pin Clamp Voltage	6 − 5	$V_{FB(CLAMP)}$	11	12.8	14	V	
Brown-In Threshold Voltage	4 − 5	$V_{BR(IN)}$	5.2	5.6	6	V	
Brown-Out Threshold Voltage	4 − 5	$V_{BR(OUT)}$	4.45	4.8	5.15	V	
BR Pin Clamp Voltage	4 − 5	$V_{BR(CLAMP)}$	6	6.4	7	V	
BR Function Disable Threshold Voltage	4 − 5	$V_{BR(DIS)}$	0.3	0.48	0.7	V	
V_{CC} Pin OVP Threshold Voltage	8 − 5	$V_{CC(OVP)}$	26	29	32	V	
Latch Circuit Holding Current [2]	8 − 5	$I_{CC(LATCH)}$	−	700	−	µA	
Thermal Shutdown Temperature	−	$T_{j(TSD)}$	135	−	−	°C	

[1] $V_{CC(BIAS)} > V_{CC(OFF)}$ always.
[2] A latch circuit is a circuit operated with Overvoltage Protection (OVP) and/or Thermal Shutdown Protection (TSD) in operation.

Electrical Characteristics of MOSFET

Unless otherwise specified, Ta is 25 °C

Characteristic	Pins	Symbol	Min.	Typ.	Max.	Unit	Notes
Drain-to-Source Breakdown Voltage	1 – 3	V_{DSS}	650	−	−	V	
Drain Leakage Current	1 – 3	I_{DSS}	−	−	300	µA	
On-Resistance	1 – 3	$R_{DS(ON)}$	−	−	1.9	Ω	
Switching Time	1 – 3	t_f	−	−	250	ns	
Thermal Resistance *	−	θ_{ch-F}	−	−	3.0	°C/W	

* The thermal resistance between the channels of the MOSFET and the internal frame

STR-V653 Characteristic Performance

STR-V653
A.S.O. temperature derating coefficient curve

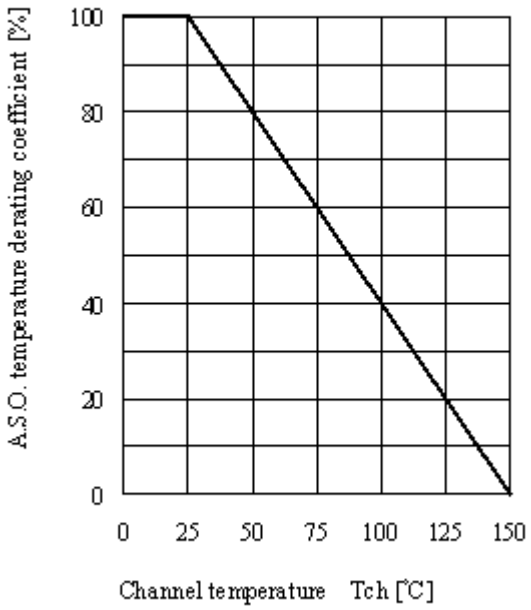

STR-V653
MOSFET A.S.O. Curve

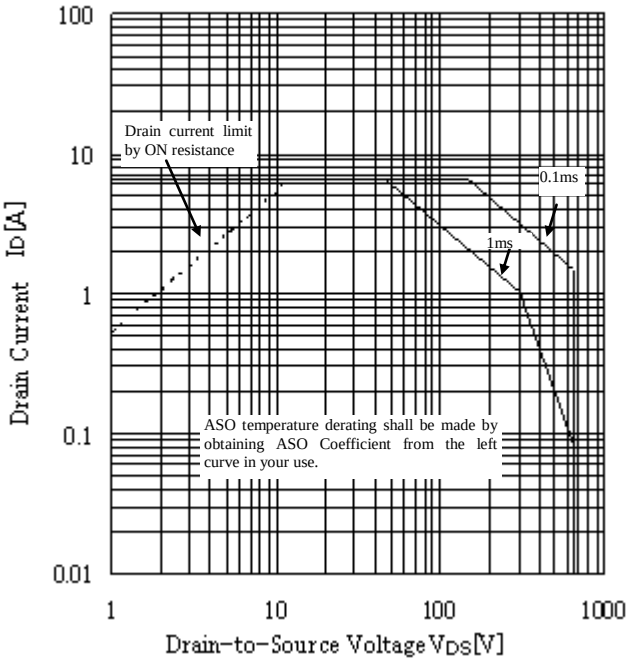

STR-V653
Avalanche energy derating curve

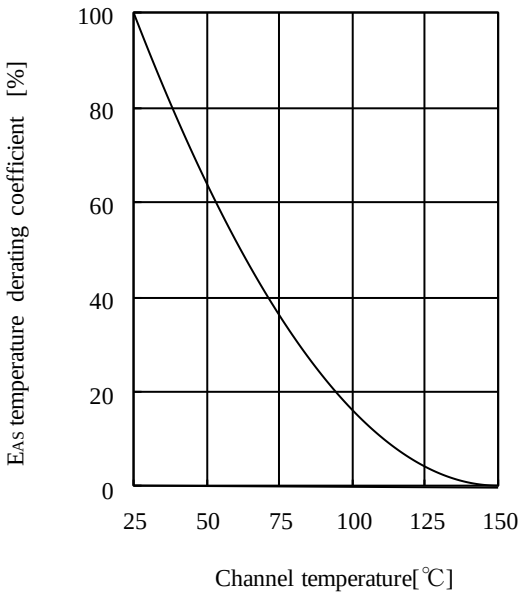

STR-V653
MOSFET Ta-PD1 Curve

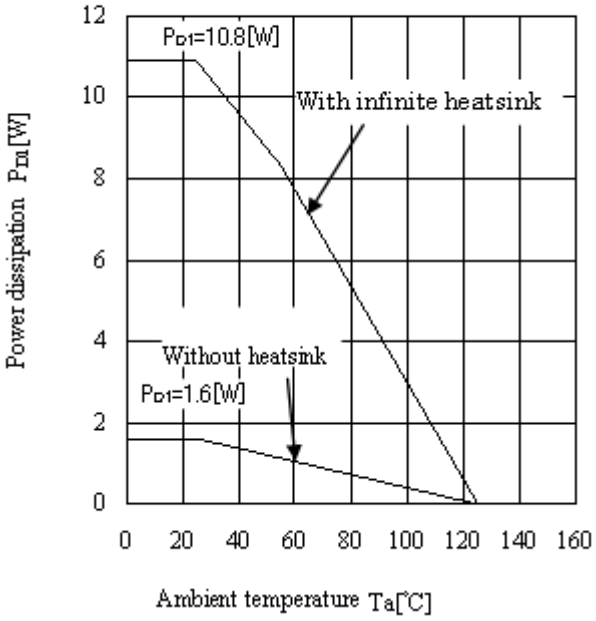

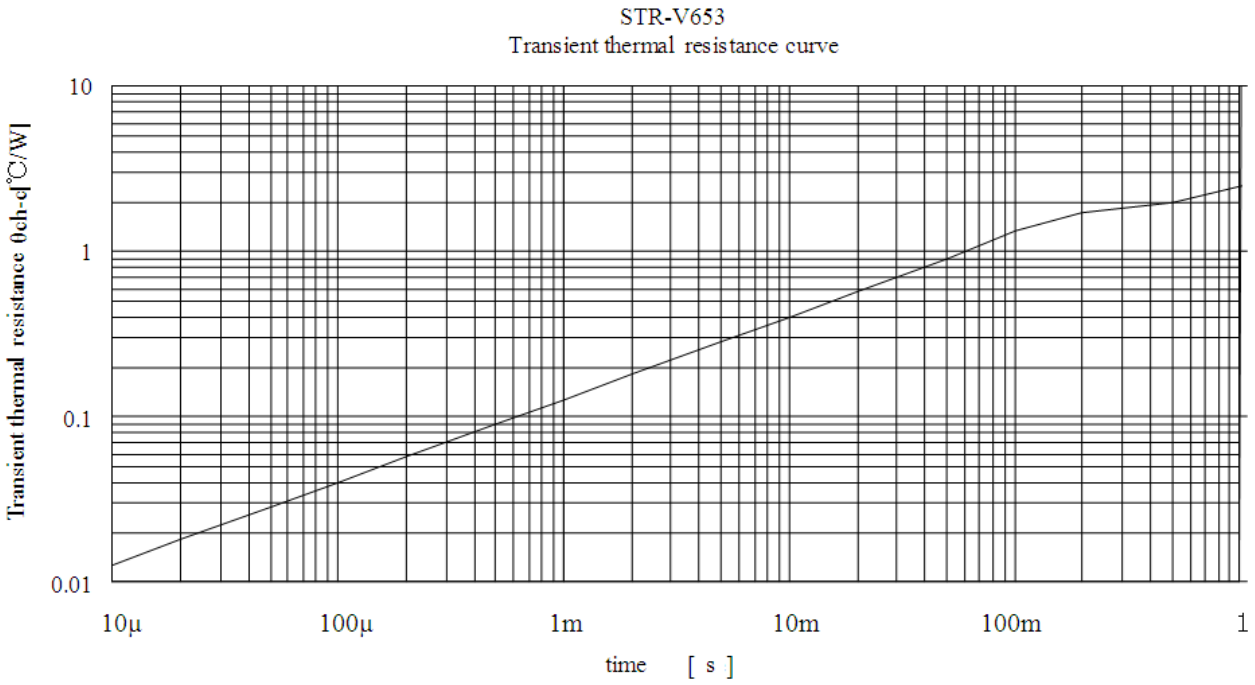
STR-V653
Transient thermal resistance curve
Transient thermal resistance θch-c[℃/W]
10
1
0.1
0.01
10μ
100μ
1m
10m
100m
1
time [s]

Functional Block Diagram

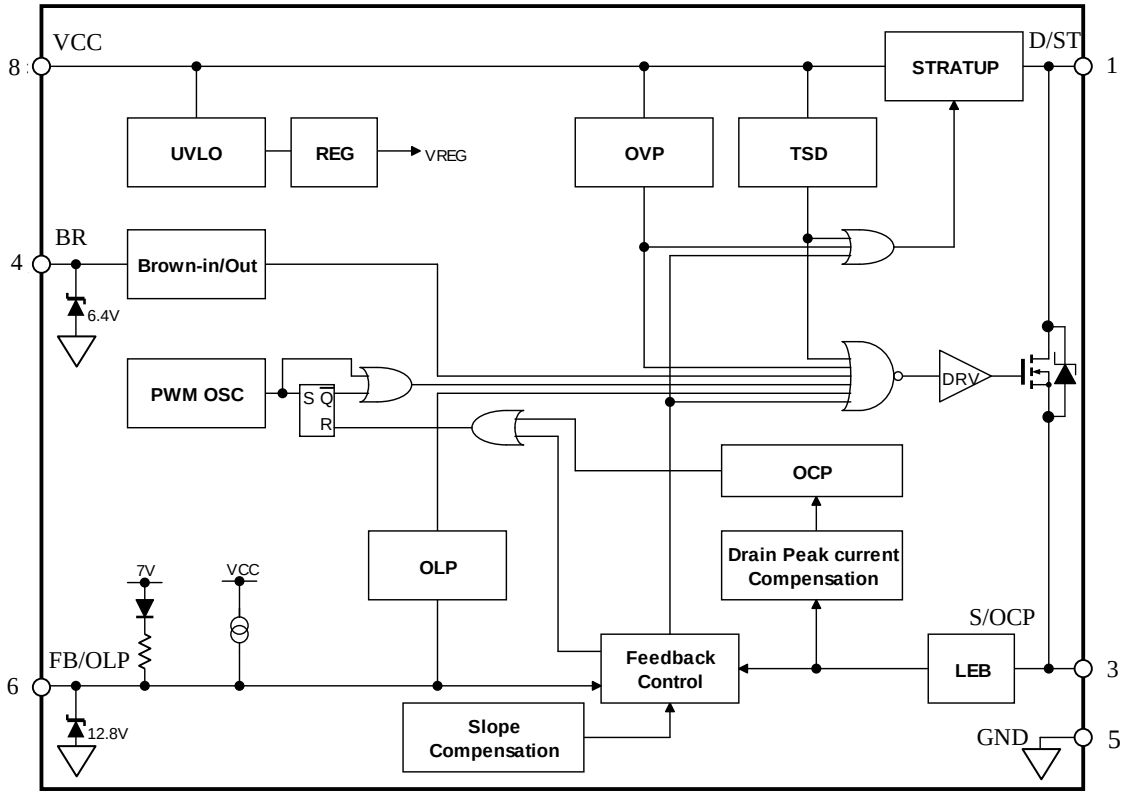

Pin List Table

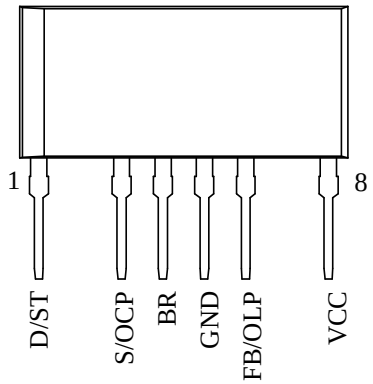

Number	Name	Function
1	D/ST	MOSFET drain pin and input of the startup current
2	−	(Pin removed)
3	S/OCP	MOSFET source and input of Overcurrent Protection (OCP) signal
4	BR	Input of Brown-In and Brown-Out detection voltage
5	GND	Ground
6	FB/OLP	Feedback signal input for constant voltage control signal and input of Overload Protection (OLP) signal
7	−	(Pin removed)
8	VCC	Power supply voltage input for Control Part and input of Overvoltage Protection (OVP) signal

Typical Application Circuit

The following drawings show circuits enabled and disabled the Brown-In/Brown-Out function.
The following design features should be observed:

- The PCB traces from the D/ST pin (pin 1) should be as wide as possible, in order to enhance thermal dissipation.
- In applications having a power supply specified such that V_{DS} has large transient surge voltages, a clamp snubber circuit of a capacitor-resistor-diode (CRD) combination should be added on the primary-side winding P, or a damper snubber circuit of a capacitor (C) or a resistor-capacitor (RC) combination should be added between the D/ST pin and the S/OCP pin.

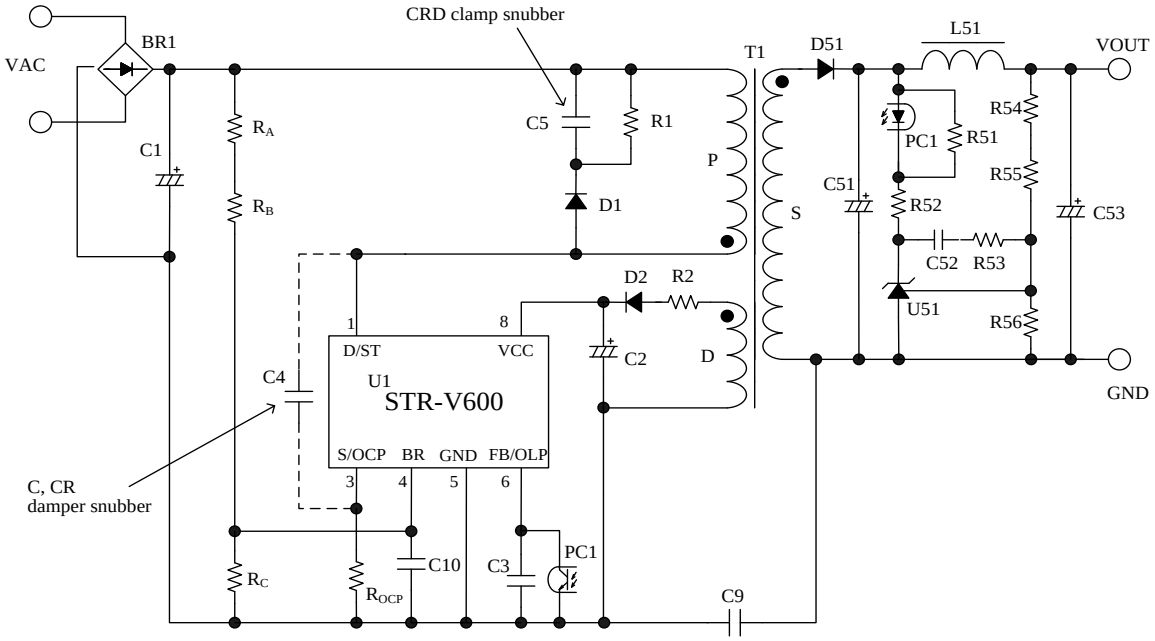

Typical application circuit example, enabled Brown-In/Brown-Out function (DC line detection)

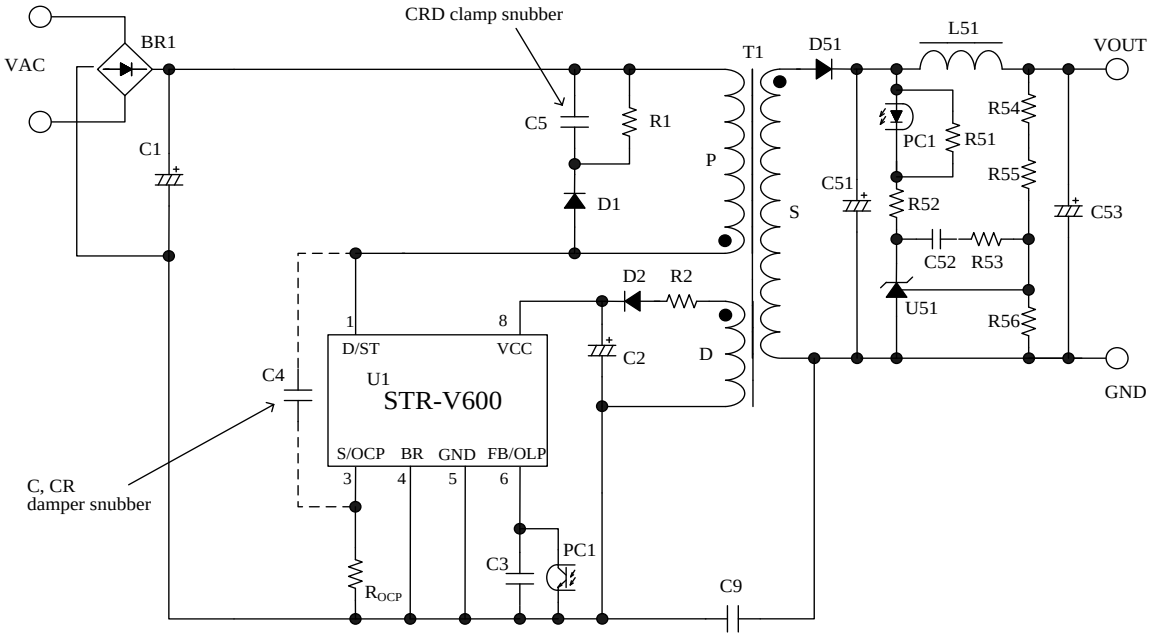

Typical application circuit example, disabled Brown-In/Brown-Out function

Package Diagram

- SIP8L package (2.54 pitch, straight lead)
- The pin 2 removed to provide greater creepage and clearance isolation between the high voltage pins (pins 1: D/ST) and the low voltage pin (pin 3: S/OCP).
- Creeping distance of 4mm or longer between high voltage and low voltage pin bases.
- Low height of less than 12 mm from PCB (Printed Circuit Board)

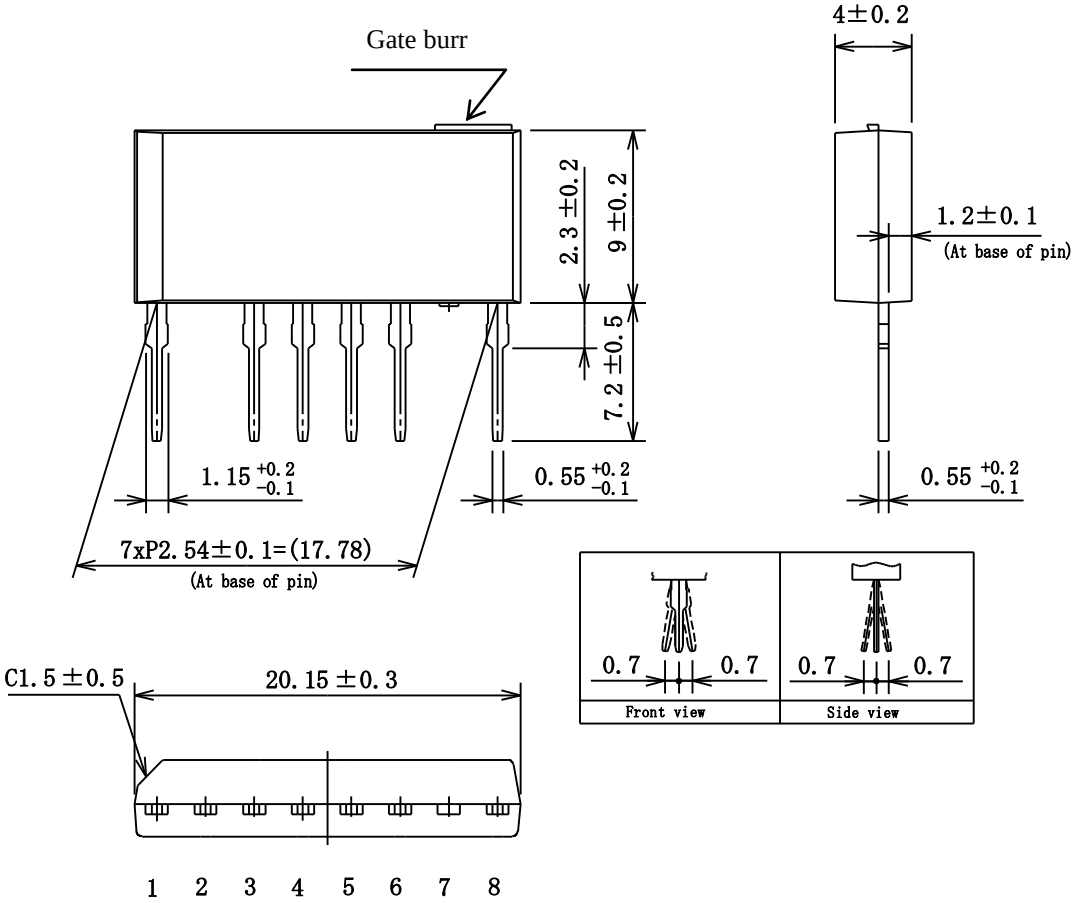

NOTES:

- Unit: mm
- Gate burr indicates protrusion of 0.3 mm (max).
- Pin treatment Pb-free. Device composition compliant with the RoHS directive.

Marking Diagram

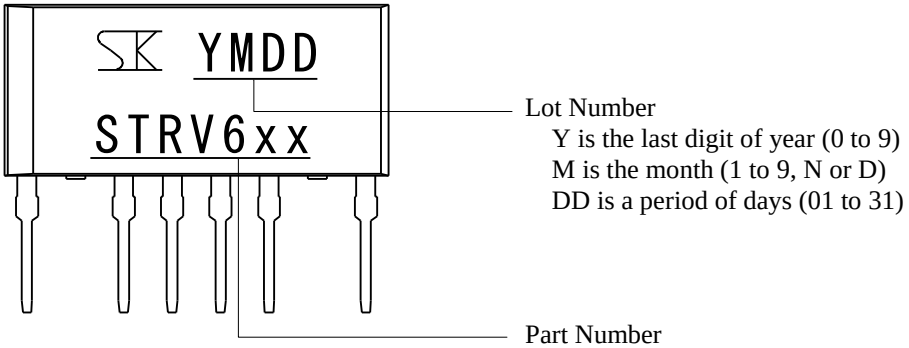

OPERATING PRECAUTIONS

In the case that you use Sanken products or design your products by using Sanken products, the reliability largely depends on the degree of derating to be made to the rated values. Derating may be interpreted as a case that an operation range is set by derating the load from each rated value or surge voltage or noise is considered for derating in order to assure or improve the reliability. In general, derating factors include electric stresses such as electric voltage, electric current, electric power etc., environmental stresses such as ambient temperature, humidity etc. and thermal stress caused due to self-heating of semiconductor products. For these stresses, instantaneous values, maximum values and minimum values must be taken into consideration. In addition, it should be noted that since power devices or IC's including power devices have large self-heating value, the degree of derating of junction temperature affects the reliability significantly.

Because reliability can be affected adversely by improper storage environments and handling methods, please observe the following cautions.

Cautions for Storage

- Ensure that storage conditions comply with the standard temperature (5 to 35°C) and the standard relative humidity (around 40 to 75%); avoid storage locations that experience extreme changes in temperature or humidity.
- Avoid locations where dust or harmful gases are present and avoid direct sunlight.
- Reinspect for rust on leads and solderability of the products that have been stored for a long time.

Cautions for Testing and Handling

When tests are carried out during inspection testing and other standard test periods, protect the products from power surges from the testing device, shorts between the product pins, and wrong connections. Ensure all test parameters are within the ratings specified by Sanken for the products.

Remarks About Using Silicone Grease with a Heatsink

- When silicone grease is used in mounting the products on a heatsink, it shall be applied evenly and thinly. If more silicone grease than required is applied, it may produce excess stress.
- Volatile-type silicone greases may crack after long periods of time, resulting in reduced heat radiation effect. Silicone greases with low consistency (hard grease) may cause cracks in the mold resin when screwing the products to a heatsink. Our recommended silicone greases for heat radiation purposes, which will not cause any adverse effect on the product life, are indicated below:

Type	Suppliers
G746	Shin-Etsu Chemical Co., Ltd.
YG6260	Momentive Performance Materials Inc.
SC102	Dow Corning Toray Co., Ltd.

Soldering

- When soldering the products, please be sure to minimize the working time, within the following limits:
  - 260 ± 5 °C 10 ± 1 s (Flow, 2 times)
  - 380 ± 10 °C 3.5 ± 0.5 s (Soldering iron, 1 time)
- Soldering should be at a distance of at least 1.5 mm from the body of the products.

Electrostatic Discharge

- When handling the products, the operator must be grounded. Grounded wrist straps worn should have at least 1MΩ of resistance from the operator to ground to prevent shock hazard, and it should be placed near the operator.
- Workbenches where the products are handled should be grounded and be provided with conductive table and floor mats.
- When using measuring equipment such as a curve tracer, the equipment should be grounded.
- When soldering the products, the head of soldering irons or the solder bath must be grounded in order to prevent leak voltages generated by them from being applied to the products.
- The products should always be stored and transported in Sanken shipping containers or conductive containers, or be wrapped in aluminum foil.

IMPORTANT NOTES

- The contents in this document are subject to changes, for improvement and other purposes, without notice. Make sure that this is the latest revision of the document before use.
- Application and operation examples described in this document are quoted for the sole purpose of reference for the use of the products herein and Sanken can assume no responsibility for any infringement of industrial property rights, intellectual property rights or any other rights of Sanken or any third party which may result from its use. Unless otherwise agreed in writing by Sanken, Sanken makes no warranties of any kind, whether express or implied, as to the products, including product merchantability, and fitness for a particular purpose and special environment, and the information, including its accuracy, usefulness, and reliability, included in this document.
- Although Sanken undertakes to enhance the quality and reliability of its products, the occurrence of failure and defect of semiconductor products at a certain rate is inevitable. Users of Sanken products are requested to take, at their own risk, preventative measures including safety design of the equipment or systems against any possible injury, death, fires or damages to the society due to device failure or malfunction.
- Sanken products listed in this document are designed and intended for the use as components in general purpose electronic equipment or apparatus (home appliances, office equipment, telecommunication equipment, measuring equipment, etc.).
  When considering the use of Sanken products in the applications where higher reliability is required (transportation equipment and its control systems, traffic signal control systems or equipment, fire/crime alarm systems, various safety devices, etc.), and whenever long life expectancy is required even in general purpose electronic equipment or apparatus, please contact your nearest Sanken sales representative to discuss, prior to the use of the products herein.
  The use of Sanken products without the written consent of Sanken in the applications where extremely high reliability is required (aerospace equipment, nuclear power control systems, life support systems, etc.) is strictly prohibited.
- When using the products specified herein by either (i) combining other products or materials therewith or (ii) physically, chemically or otherwise processing or treating the products, please duly consider all possible risks that may result from all such uses in advance and proceed therewith at your own responsibility.
- Anti radioactive ray design is not considered for the products listed herein.
- Sanken assumes no responsibility for any troubles, such as dropping products caused during transportation out of Sanken's distribution network.
- The contents in this document must not be transcribed or copied without Sanken's written consent.

ENTEGRECİ

Bu belge www.entegreci.com üzerinden sunulmaktadır.

Elektronik komponent tedarikinde Entegreci

Entegreci, Eskişehir merkezli, Türkiye geneline satış yapan bir elektronik komponent mağazasıdır. Entegreler (IC), mikrodenetleyiciler, transistörler, diyotlar, pasif elemanlar, konnektörler, modüller ve geliştirme kartları tek adetten seri üretim adetlerine kadar satılır. Ürün sayfalarında güncel stok durumunu, fiyatı ve datasheet bağlantısını bulabilirsiniz.

Parça koduyla arama

Üretici parça numarasını yazın; stok ve fiyatı hemen görün.

www.entegreci.com

Ürün kategorileri

Entegreden kapasitöre tüm elektronik komponent kategorileri.

Kategorilere göz atın

Üreticiler

Aradığınız üreticinin ürünlerini tek sayfada inceleyin.

Üreticileri görün

Toplu alım ve teklif

Listede olmayan ya da yüksek adetli parçalar için teklif isteyin.

Teklif isteyin

www.entegreci.com | **destek@entegreci.com** | **0850 305 90 34**

Entegreci is an online electronic components store based in Türkiye. Search by manufacturer part number to see stock, prices and datasheets for integrated circuits, microcontrollers, transistors, passive components and connectors, or request a quote for parts that are not listed.

Bu sayfa Entegreci tarafından eklenmiştir. Belgenin önceki sayfaları asıl yayıncısına aittir ve içeriği değiştirilmemiştir; en güncel sürüm için belgenin yayıncısına başvurun.