Low Profile and Creeping distance of 4mm Package
650V, 2.8Ω, t_{OFF}= 8μs, PRC Off-Line Switching Regulator

STR-V152

Mar/28/2012

General Descriptions

The STR-V100 series comprise an integrated power MOSFET and a controller IC with a current mode and PRC* control for switching power supply applications.

* PRC (Pulse Ratio Control)---the control method for OFF-time fixed and ON time controlled (Sanken's designation)

The SIP8L full mold package of low-profile and with creeping distance between high and low voltage of 4mm or longer (lead pin on Printed Circuit Board, PCB).

A startup circuit and a standby function are incorporated in the control circuit. Thereby, requirements for low power consumption and low standby power can be achieved.

The product easily achieves high cost-performance power supply system with few external components and enhanced protection functions.

Package

SIP8L

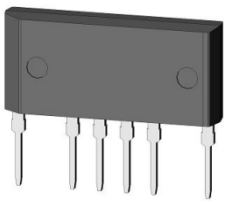

Features

- SIP8L package (2.54 pitch, straight lead pin)
  Creeping distance of 4mm or longer between high voltage pin and low voltage pin (lead pin on PCB)
  Low profile; height from PCB of 12mm or less
- Current-Mode type PRC Control
- Auto-Standby Function
  Input power P_{IN} at no load < 40mW, for low power consumption
- Built-in Auto Bias Function
- Built-in Leading Edge Blanking Function
- Protection functions
  Overcurrent Protection (OCP)-----Pulse-by-pulse
  Overvoltage Protection (OVP) ----Latched shutdown
  Overload Protection (OLP) --------Auto restart
  Thermal Shutdown (TSD) ---------Latched shutdown

Electrical Characteristics

- Power MOSFET
  V_{DSS}(MIN)= 650V
  $R_{DS(ON)}$(MAX)= 2.8Ω
- Fixed OFF-Time, t_{OFF}(TYP)= 8μs

Applications

- Stand-by power supply
- White goods
- Office automation equipment
- Industrial equipment
- Communication equipment

Not Recommended for New Designs

Typical Application Circuit

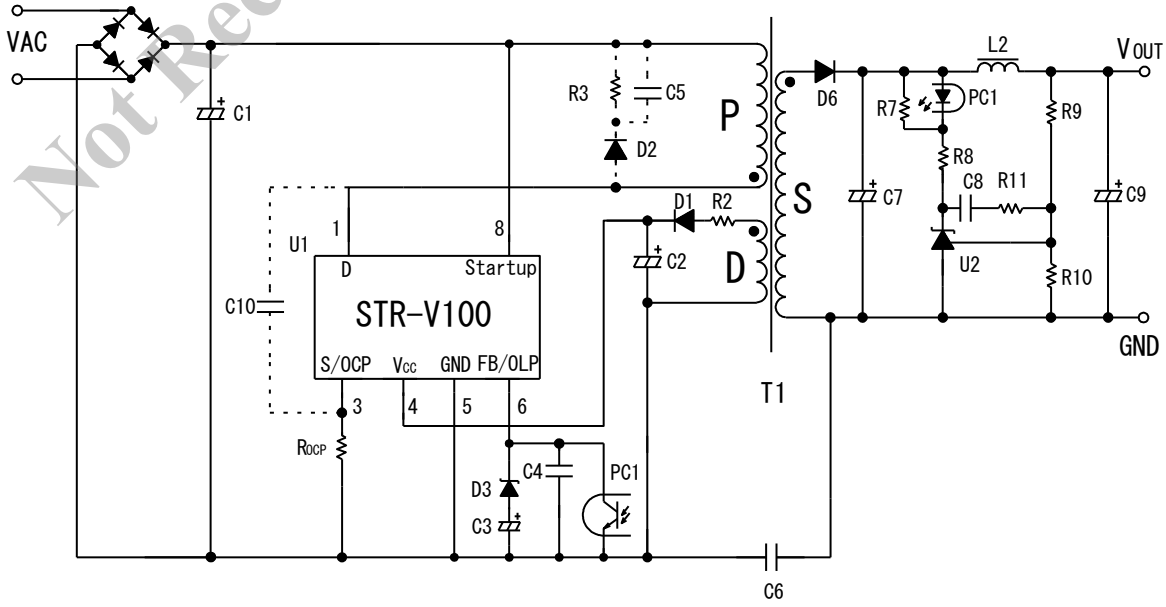

Absolute Maximum Ratings (1) Valid at Ta=25°C unless otherwise specified

Characteristic	Pins	Symbol	Rating	Unit	Notes
Drain Current (2)	1−3	I_{DPEAK}	4.0	A	Single pulse
Maximum Switching Current	1−3	I_{DMAX}	4.0	A	V_{3-5}=1.33V Ta= −20 to +125°C
Avalanche Energy (3)	1−3	E_{AS}	90	mJ	Single pulse V_{DD}=99V, L=20mH I_L=2.8A
S/OCP Pin Voltage	3−5	$V_{S/OCP}$	−0.5 to 6	V	
Supply Voltage for Control Circuit	4−5	V_{CC}	35	V	
FB /OLP Pin Voltage	6−5	$V_{FB/OLP}$	−0.5 to 10	V	
Startup Pin Voltage	8−5	$V_{STARTUP}$	−0.3 to 600	V	
Power Dissipation in MOSFET (4)	1−3	P_{D1}	10.6	W	With infinite heat sink
			1.6	W	Without heat sink
Power Dissipation in Control Circuit (5)	4−5	P_{D2}	0.15	W	Specified by V_{CC}×I_{CC}
Internal Frame Temperature in Operation	—	T_F	−20 to +125	°C	Recommended internal frame temperature T_F= 115°C (Max)
Operating Ambient Temperature	—	T_{OP}	−20 to +125	°C	
Storage Temperature	—	T_{stg}	−40 to +125	°C	
Channel Temperature	—	T_{ch}	+150	°C	

(1)Current characteristics are defined based on IC as sink (+), or source (−)
(2)Refer to MOSFET Safe Operating Area Curve
(3)Refer to MOSFET Avalanche Energy Derating Coefficient Curve
(4)Refer to MOSFET Temperature versus Power Dissipation Curve1
(5)Refer to MOSFET Temperature versus Power Dissipation Curve2

Not Recommended for New Designs

Electrical characteristics in Control Part [1] Valid at V_{CC}=18V, Ta = 25°C, unless otherwise specified

Characteristic	Pins	Symbol	Rating			Unit	Notes
			MIN	TYP	MAX		
Operation Start Voltage	4 − 5	$V_{CC\ (ON)}$	16.0	17.5	19.2	V	
Operation Stop Voltage [2]	4 − 5	$V_{CC\ (OFF)}$	9	10	11	V	
Circuit Current in Operation	4 − 5	$I_{CC(ON)}$	—	—	4	mA	
Circuit Current in Non-operation	4 − 5	$I_{CC(OFF)}$	—	—	50	μA	V_{CC}=14V
Auto Bias Threshold Voltage	4 − 5	$V_{CC(BIAS)}$	9.6	10.6	11.6	V	
$V_{BIAS}-V_{CC\ (OFF)}$	—	—	0.2	—	—	V	
Maximum OFF Time	1 − 5	$t_{OFF(MAX)}$	7.3	8.0	8.7	μs	
OCP Threshold Voltage	3 − 5	V_{OCP}	1.07	1.20	1.33	V	
Leading Edge Blanking Time	1 − 5	t_{BW}	168	280	392	ns	
Burst Threshold Voltage	6 − 5	V_{BURST}	0.67	0.76	0.85	V	
OLP Threshold Voltage	6 − 5	V_{OLP}	6.5	7.2	7.9	V	
OLP Source Current	6 − 5	I_{OLP}	−34.1	−26.0	−18.2	μA	
Maximum FB Source Current	6 − 5	$I_{FB(MAX)}$	−390	−300	−220	μA	
Startup Current	8 − 5	$I_{STARTUP}$	340	790	1230	μA	
Startup Circuit Leakage Current	8 − 5	$I_{START(leak)}$	—	—	30	μA	
V_{CC} Pin Overvoltage Protection Threshold Voltage	4 − 5	$V_{CC(OVP)}$	28.7	31.2	34.1	V	
Latch Circuit Holding Current [3]	4 − 5	$I_{CC(H)}$	—	—	200	μA	
Latch Circuit Release Voltage [2] [3]	4 − 5	$V_{CC(La\ OFF)}$	6.6	7.3	8.0	V	
Thermal Shutdown Operation Temperature	—	$T_{j(TSD)}$	135	—	—	°C	

[1] Current characteristics are defined based on IC as sink (+), or source (−)
[2] $V_{CC\ (OFF)} > V_{CC\ (La\ OFF)}$ always
[3] Latch circuit is activated by OVP and TSD protection functions

Electrical Characteristics in MOSFET [1] Valid at Ta=25°C unless otherwise specified

Characteristic	Pins	Symbol	Rating			Unit	Notes
			MIN	TYP	MAX		
Drain-source Voltage	1 − 3	V_{DSS}	650	—	—	V	
Drain Leakage Current	1 − 3	I_{DSS}	—	—	300	μA	
ON Resistance	1 − 3	$R_{DS(ON)}$	—	—	2.8	Ω	
Switching Time	1 − 3	t_f	—	—	250	ns	
Thermal Resistance [2]	—	θ_{ch-F}	—	—	4.05	°C/W	

[1] Current characteristics are defined based on IC as sink (+), or source (−)
[2] The thermal resistance between the channel of the MOSFET and the internal frame

Not Recommended for New Designs

MOSFET Performance Curves

STR-V152
Transient thermal resistance curve

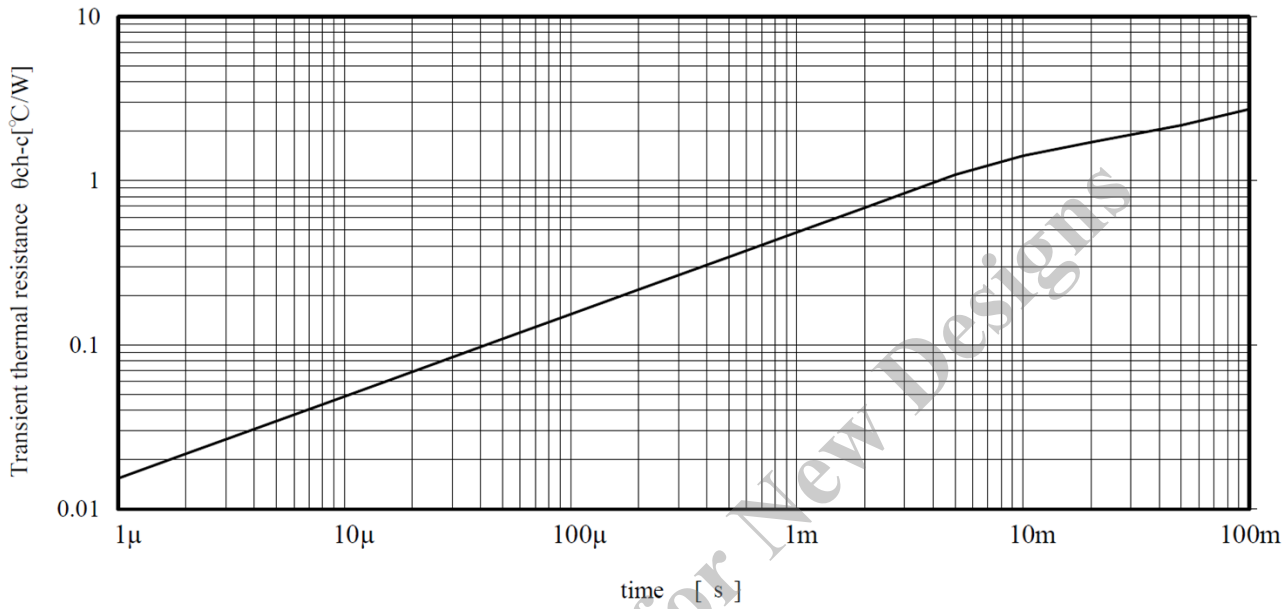

STR-V152
A.S.O. temperature derating coefficient curve

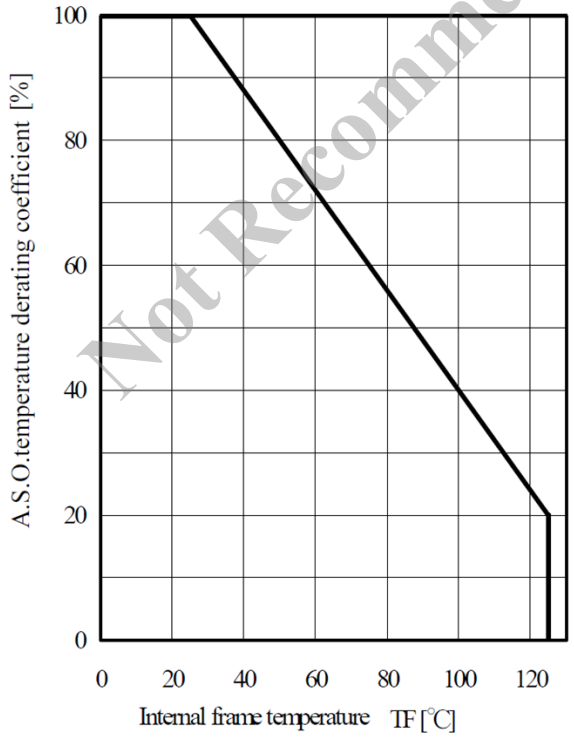

STR-V152
MOSFET A.S.O. Curve Ta=25℃ Single Pulse

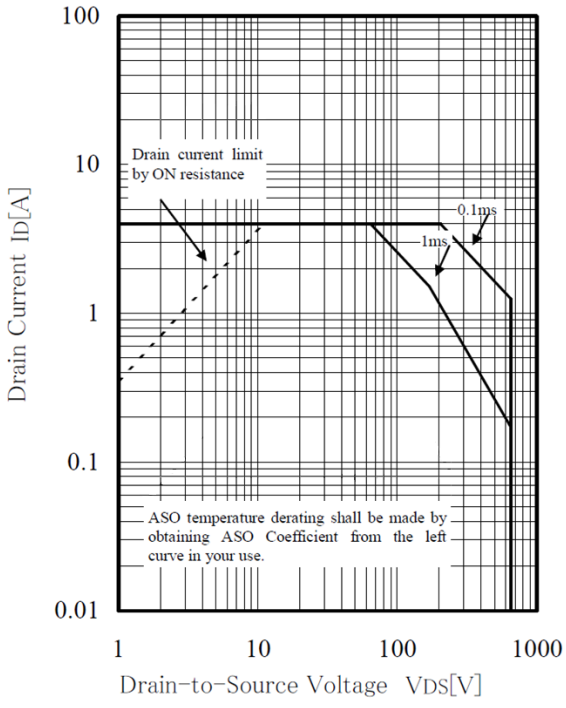

Not Recommended for New Designs

STR-V152
Avalanche energy derating curve

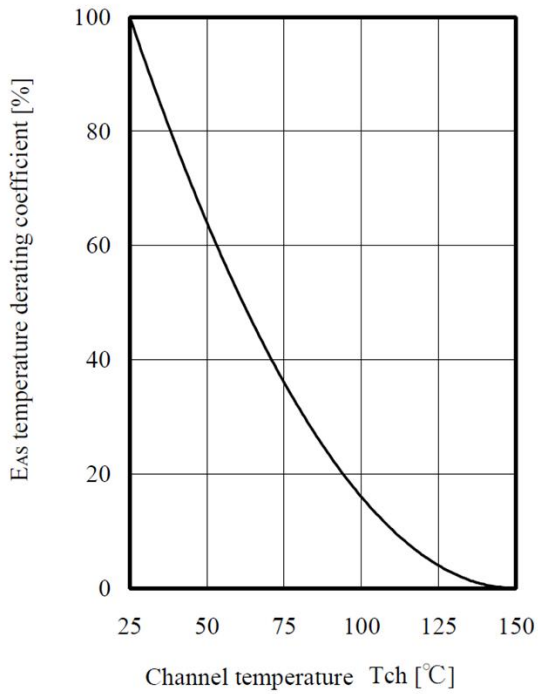

STR-V152
MOSFET Ta-PD1 Curve

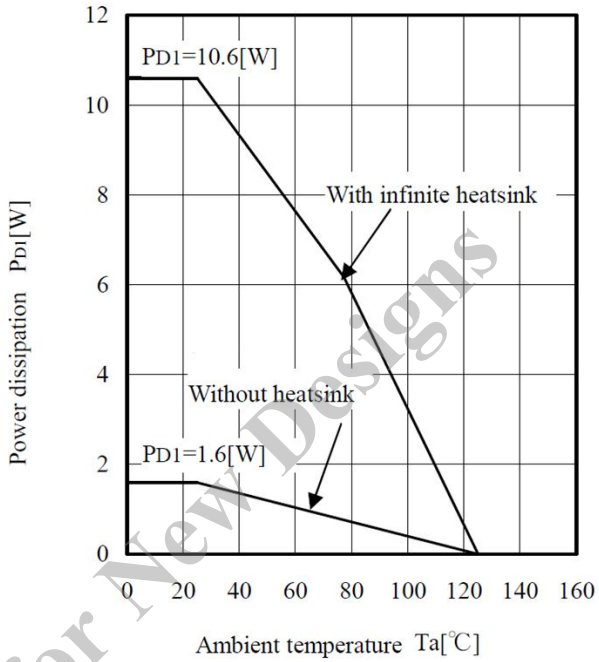

STR-V152
MIC TF-PD2 Curve

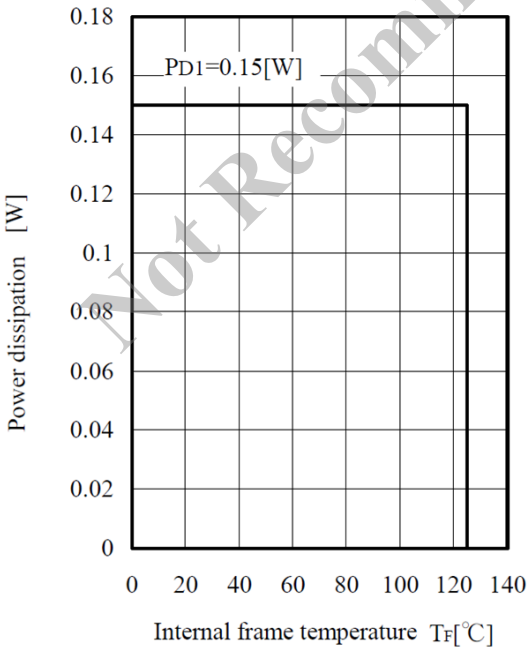

Not Recommended for New Designs

Functional Block Diagram

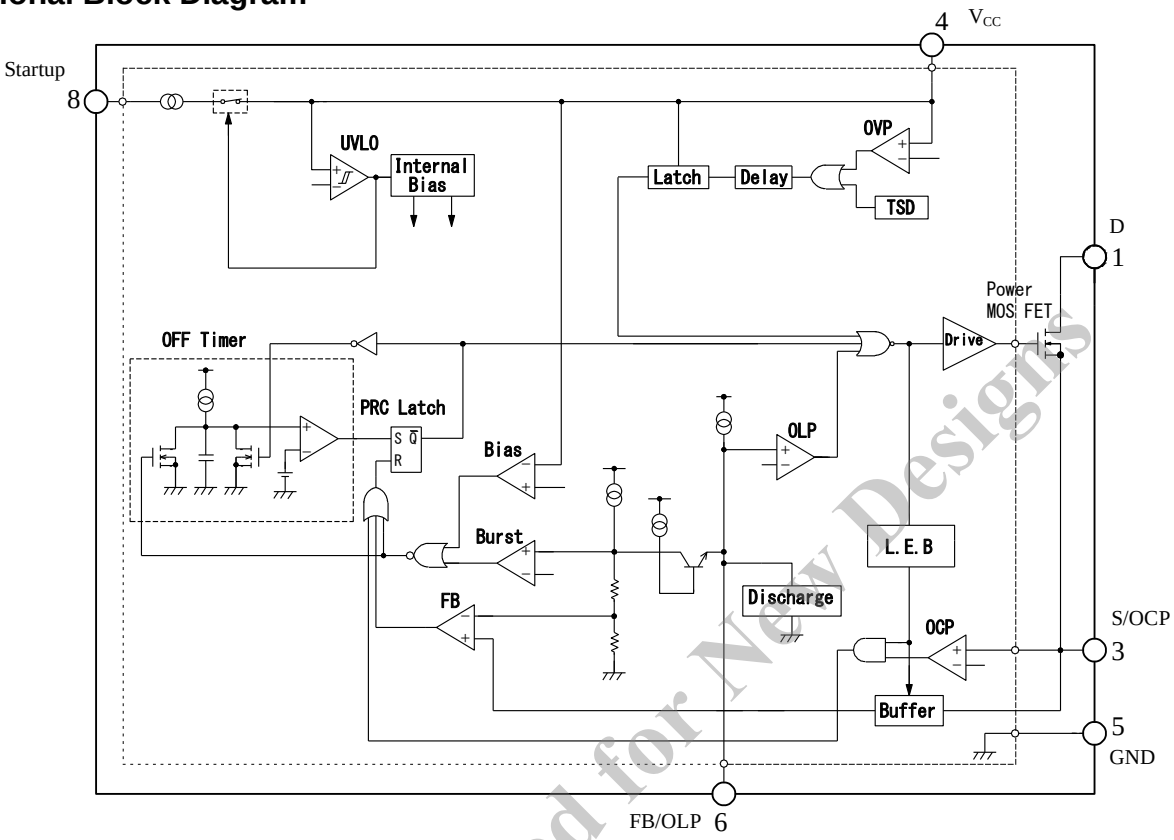

Not Recommended for New Designs

Pin List Table

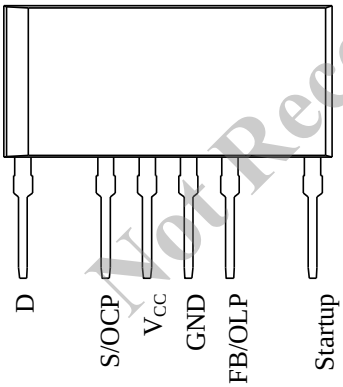

Number	Name	Function
1	D	MOSFET drain
2	—	Pin removed
3	S/OCP	MOSFET source and overcurrent detection signal input
4	V_{CC}	Control circuit power supply input and Overvoltage Protection (OVP) signal input
5	GND	Ground
6	FB/OLP	Constant voltage control signal input and overload protection signal input
7	—	Pin removed
8	Startup	Startup current input

Typical Application circuit

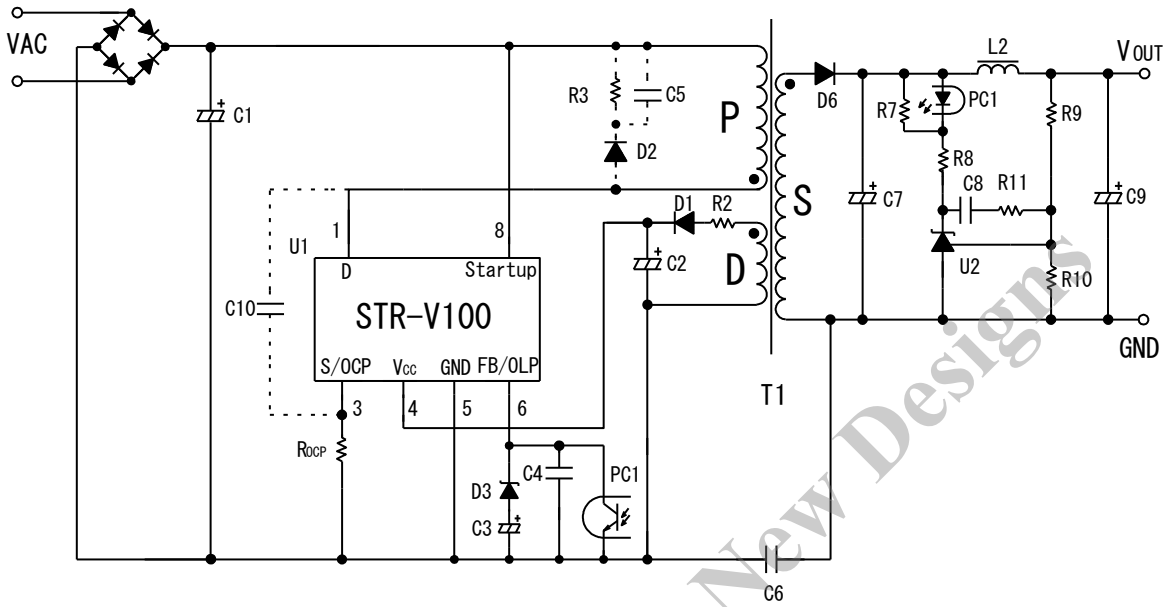

Not Recommended for New Designs

STR-V152

Package Information

SIP8L package (2.54 pitch, straight lead pin)

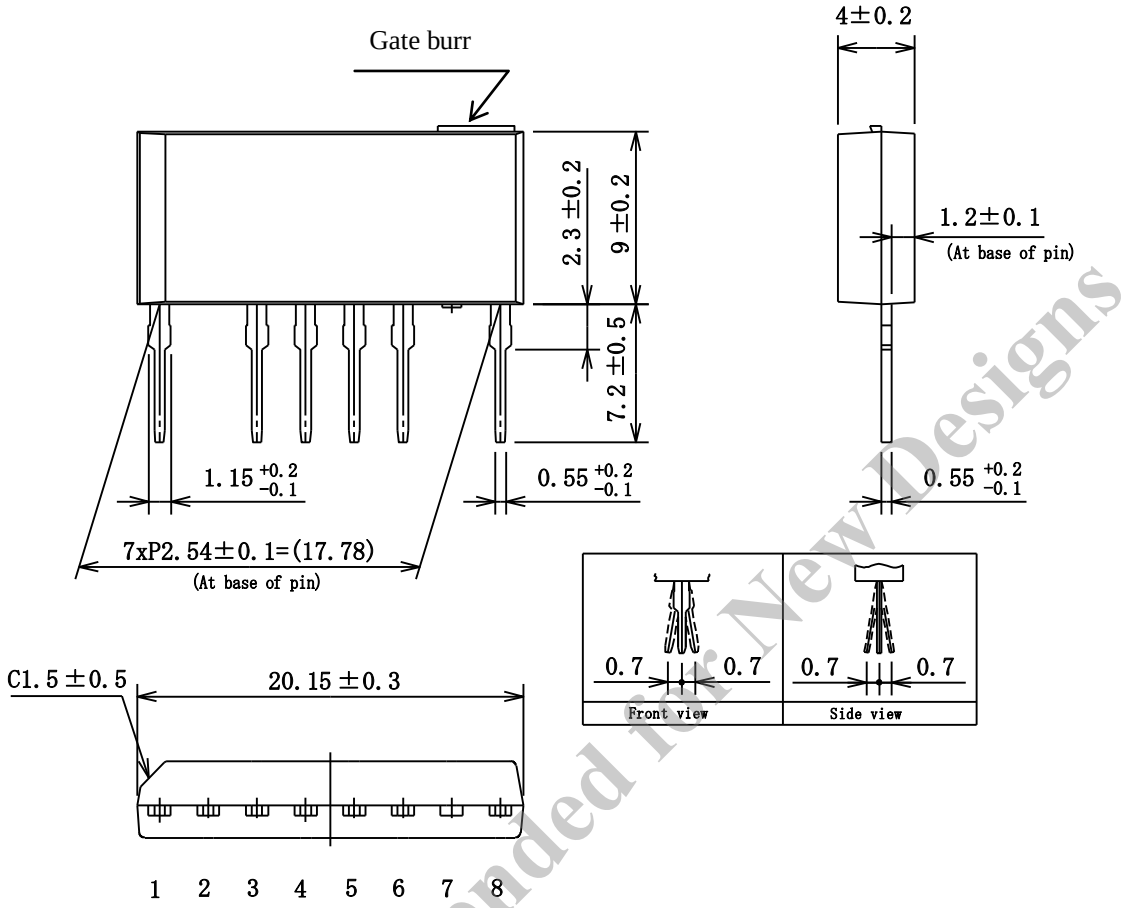

NOTES:

1) All liner dimensions are in millimeters
2) "Gate Burr" shows area where 0.3 mm (max) gate burr may be present
3) Pin treatment Pb-free. Device composition compliant with the RoHS directive

Marking Diagram

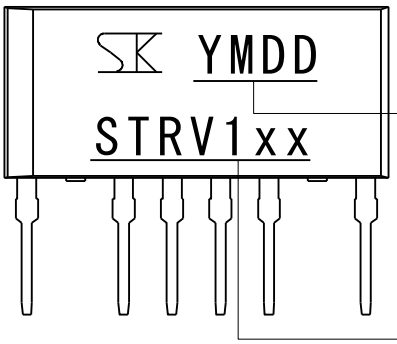

Lot Number
- Y: Last digit of year (0 to 9)
- M: Month (1 to 9, N or D)
- DD: Date (01 to 31)

Device Part Number

Not Recommended for New Designs

OPERATING PRECAUTIONS

Reliability can be affected adversely by improper storage environments and handling methods. Please observe the following cautions.

Cautions for Storage

- Ensure that storage conditions comply with the standard temperature (5 to 35°C) and the standard relative humidity (around 40 to 75%); avoid storage locations that experience extreme changes in temperature or humidity.
- Avoid locations where dust or harmful gases are present and avoid direct sunlight.
- Reinspect for rust on leads and solderability of products that have been stored for a long time.

Cautions for Testing and Handling

- When tests are carried out during inspection testing and other standard test periods, protect the products from power surges from the testing products, shorts between the product pins, and wrong connections. In addition, avoid tests exceeded ratings

Remarks about Using Silicone Grease with a Heatsink

- When silicone grease is used in mounting this product on a heatsink, it shall be applied evenly and thinly. If more silicone grease than required is applied, it may produce excess stress.
- Volatile-type silicone greases may crack after long periods of time, resulting in reduced heat radiation effect. Silicone grease with low consistency (hard grease) may cause cracks in the mold resin when screwing the product to a heatsink.
  Our recommended silicone grease for heat radiation purposes, which will not cause any adverse effect on the product life, are indicated below:

Type	Suppliers
G746	Shin-Etsu Chemical Co., Ltd.
YG6260	MOMENTIVE performance materials Inc.
SC102	Dow Corning Toray Co., Ltd.

Soldering

- When soldering the products, please be sure to minimize the working time, within the following limits.
  - ・260±5°C 10±1 s(Flow, 2times)
  - ・380±10°C 3.5±0.5s (Soldering iron, 1time)

  Soldering should be at a distance of at least 1.5 mm from the body of the products.

Electrostatic Discharge

- When handling the products, the operator must be grounded. Grounded wrist straps worn should have at least 1MΩ of resistance from the operator to ground to prevent shock hazard, and it should be placed near the operator.
- Workbenches where the products are handled should be grounded and be provided with conductive table and floor mats.
- When using measuring equipment such as a curve tracer, the equipment should be grounded.
- When soldering the products, the head of a soldering irons or the solder bath must be grounded in order to prevent leak voltages generated by them from being applied to the products.
- The products should always be stored and transported in Sanken shipping containers or conductive containers, or be wrapped in aluminum foil.

Not Recommended for New Design

INPORTANTS NOTES

- The contents in this document are subject to changes, for improvement and other purposes, without notice. Make sure that this is the latest revision of the document before use.
- Application and operation examples described in this document are quoted for the sole purpose of reference for the use of the products herein and Sanken can assume no responsibility for any infringement of industrial property rights, intellectual property rights or any other rights of Sanken or any third party which may result from its use.
- Although Sanken undertakes to enhance the quality and reliability of its products, the occurrence of failure and defect of semiconductor products at a certain rate is inevitable. Users of Sanken products are requested to take, at their own risk, preventative measures including safety design of the equipment or systems against any possible injury, death, fires or damages to the society due to device failure or malfunction.
- Sanken products listed in this document are designed and intended for the use as components in general purpose electronic equipment or apparatus (home appliances, office equipment, telecommunication equipment, measuring equipment, etc.).
  When considering the use of Sanken products in the applications where higher reliability is required (transportation equipment and its control systems, traffic signal control systems or equipment, fire/crime alarm systems, various safety devices, etc.), and whenever long life expectancy is required even in general purpose electronic equipment or apparatus, please contact your nearest Sanken sales representative to discuss, prior to the use of the products herein.
  The use of Sanken products without the written consent of Sanken in the applications where extremely high reliability is required (aerospace equipment, nuclear power control systems, life support systems, etc.) is strictly prohibited.
- In the case that you use Sanken semiconductor products or design your products by using Sanken semiconductor products, the reliability largely depends on the degree of derating to be made to the rated values. Derating may be interpreted as a case that an operation range is set by derating the load from each rated value or surge voltage or noise is considered for derating in order to assure or improve the reliability. In general, derating factors include electric stresses such as electric voltage, electric current, electric power etc., environmental stresses such as ambient temperature, humidity etc. and thermal stress caused due to self-heating of semiconductor products. For these stresses, instantaneous values, maximum values and minimum values must be taken into consideration.
  In addition, it should be noted that since power devices or IC's including power devices have large self-heating value, the degree of derating of junction temperature affects the reliability significantly.
- When using the products specified herein by either (i) combining other products or materials therewith or (ii) physically, chemically or otherwise processing or treating the products, please duly consider all possible risks that may result from all such uses in advance and proceed therewith at your own responsibility.
- Anti radioactive ray design is not considered for the products listed herein.
- Sanken assumes no responsibility for any troubles, such as dropping products caused during transportation out of Sanken's distribution network.
- The contents in this document must not be transcribed or copied without Sanken's written consent.

Not Recommended for New Designs

ENTEGRECİ

Bu belge www.entegreci.com üzerinden sunulmaktadır.

Elektronik komponent tedarikinde Entegreci

Entegreci, Eskişehir merkezli, Türkiye geneline satış yapan bir elektronik komponent mağazasıdır. Entegreler (IC), mikrodenetleyiciler, transistörler, diyotlar, pasif elemanlar, konnektörler, modüller ve geliştirme kartları tek adetten seri üretim adetlerine kadar satılır. Ürün sayfalarında güncel stok durumunu, fiyatı ve datasheet bağlantısını bulabilirsiniz.

Parça koduyla arama

Üretici parça numarasını yazın; stok ve fiyatı hemen görün.

www.entegreci.com

Ürün kategorileri

Entegreden kapasitöre tüm elektronik komponent kategorileri.

Kategorilere göz atın

Üreticiler

Aradığınız üreticinin ürünlerini tek sayfada inceleyin.

Üreticileri görün

Toplu alım ve teklif

Listede olmayan ya da yüksek adetli parçalar için teklif isteyin.

Teklif isteyin

www.entegreci.com | **destek@entegreci.com** | **0850 305 90 34**

Entegreci is an online electronic components store based in Türkiye. Search by manufacturer part number to see stock, prices and datasheets for integrated circuits, microcontrollers, transistors, passive components and connectors, or request a quote for parts that are not listed.

Bu sayfa Entegreci tarafından eklenmiştir. Belgenin önceki sayfaları asıl yayıncısına aittir ve içeriği değiştirilmemiştir; en güncel sürüm için belgenin yayıncısına başvurun.