Off-line PWM Controllers with Integrated Power MOSFET

STR-A6000MZ/HZ Series

Data Sheet

Description

The STR-A6000MZ/HZ series are power ICs for switching power supplies, incorporating a power MOSFET and a current mode PWM controller IC.

The low standby power is accomplished by the automatic switching between the PWM operation in normal operation and the burst-oscillation under light load conditions. The product achieves high cost-performance power supply systems with few external components.

Features

- Current Mode Type PWM Control
- Brown-in and Brown-out Function
- Soft Start Function
- Auto Standby Function
  No Load Power Consumption < 25mW
- Operation Mode
  Normal Operation ----------PWM Mode
  Standby ---------- Burst Oscillation Mode
- Random Switching Function
- Slope Compensation Function
- Leading Edge Blanking Function
- Bias Assist Function
- Protections
  - Two Types of Overcurrent Protection (OCP): Pulse-by-Pulse, built-in compensation circuit to minimize OCP point variation on AC input voltage
  - Overload Protection with timer (OLP): Auto-restart
  - Overvoltage Protection (OVP): Auto-restart
  - Thermal Shutdown (TSD) with hysteresis: Auto-restart

Typical Application

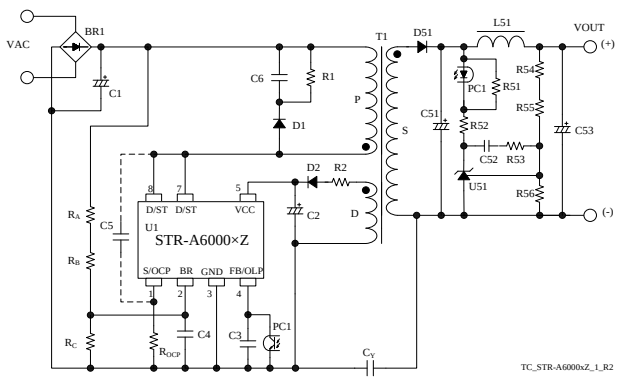

Package

DIP8



Not to scale

Selection Guide

- Electrical Characteristics

Part Number	MOSFET V_{DSS}(min.)	Frequency $f_{OSC(AVG)}$
STR-A606×MZ	700 V	67 kHz
STR-A606×HZ	700 V	100 kHz

- MOSFET ON Resistance and Output Power, P_{OUT}*

Part Number	$R_{DS(ON)}$ (max.)	P_{OUT} (Adapter)		P_{OUT} (Open frame)	
		AC230V	AC85 ~265V	AC230V	AC85 ~265V
$f_{OSC(AVG)}$ = 67 kHz					
STR-A6069MZ	6.0 Ω	15 W	10 W	26 W	17 W
STR-A6061MZ	3.95 Ω	18.5 W	14 W	31 W	21 W
STR-A6063MZ	2.3 Ω	24 W	19.5 W	37.5 W	26 W
$f_{OSC(AVG)}$ = 100 kHz					
STR-A6069HZ	6.0 Ω	17 W	11 W	30 W	19.5 W
STR-A6061HZ	3.95 Ω	20.5 W	15 W	35 W	23.5 W
STR-A6063HZ	2.3 Ω	25 W	20 W	40 W	28 W

* The output power is actual continues power that is measured at 50 °C ambient. The peak output power can be 120 to 140 % of the value stated here. Core size, ON Duty, and thermal design affect the output power. It may be less than the value stated here.

Applications

- Large Home Appliance
- Office Automation Equipment
- Audiovisual Equipment
- Industrial Equipment
- Other SMPSs (Switching Mode Power Supplies)

© SANKEN ELECTRIC CO., LTD. 2014

Contents

Description ---- 1

Contents ---- 2

1. Absolute Maximum Ratings ---- 3

2. Electrical Characteristics ---- 4

3. Mechanical Characteristics ---- 5

4. Performance Curves ---- 6
- **4.1 Derating Curves** ---- 6
- **4.2 Ambient Temperature versus Power Dissipation Curve** ---- 6
- **4.3 MOSFET Safe Operating Area Curves** ---- 7
- **4.4 Transient Thermal Resistance Curves** ---- 8

5. Block Diagram ---- 9

6. Pin Configuration Definitions ---- 9

7. Typical Applications ---- 10

8. Physical Dimensions ---- 11

9. Marking Diagram ---- 12

10. Operational Description ---- 13
- **10.1 Startup Operation** ---- 13
- **10.2 Undervoltage Lockout (UVLO)** ---- 14
- **10.3 Bias Assist Function** ---- 14
- **10.4 Soft Start Function** ---- 14
- **10.5 Constant Output Voltage Control** ---- 15
- **10.6 Leading Edge Blanking Function** ---- 16
- **10.7 Random Switching Function** ---- 16
- **10.8 Automatic Standby Mode Function** ---- 16
- **10.9 Brown-in and Brown-out Function** ---- 16
- **10.10 Overcurrent Protection (OCP)** ---- 18
- **10.11 Overload Protection (OLP)** ---- 19
- **10.12 Overvoltage Protection (OVP)** ---- 19
- **10.13 Thermal Shutdown (TSD)** ---- 20

11. Design Notes ---- 20
- **11.1 External Components** ---- 20
- **11.2 PCB Trace Layout and Component Placement** ---- 22

12. Pattern Layout Example ---- 24

13. Reference Design of Power Supply ---- 25

Important Notes ---- 28

© SANKEN ELECTRIC CO., LTD. 2014

1. Absolute Maximum Ratings

Current polarities are defined as follows: current going into the IC (sinking) is positive current (+); and current coming out of the IC (sourcing) is negative current (−).

Unless specifically noted, T_A = 25 °C, 7 pin = 8 pin.

Parameter	Symbol	Conditions	Pins	Rating	Units	Notes
Drain Peak Current (1)	I_{DPEAK}	Single pulse	8 − 1	1.8	A	A6069MZ/HZ
				2.5		A6061MZ/HZ
				4.0		A6063MZ/HZ
Maximum Switching Current (2)	I_{DMAX}	T_A = − 40 to 125 °C	8 − 1	1.8	A	A6069MZ/HZ
				2.5		A6061MZ/HZ
				4.0		A6063MZ/HZ
Avalanche Energy(3)(4)	E_{AS}	I_{LPEAK}=1.8A	8 − 1	24	mJ	A6069MZ/HZ
		I_{LPEAK}=1.78A		36		A6061MZ/HZ
		I_{LPEAK}=2.15A		53		A6063MZ/HZ
S/OCP Pin Voltage	$V_{S/OCP}$		1 − 3	− 2 to 6	V	
BR Pin Voltage	V_{BR}		2 − 3	− 0.3 to 7.5	V	
BR Pin Sink Current	I_{BR}		2 − 3	1.0	mA	
FB/OLP Pin Voltage	V_{FB}		4 − 3	− 0.3 to 14	V	
FB/OLP Pin Sink Current	I_{FB}		4 − 3	1.0	mA	
VCC Pin Voltage	V_{CC}		5 − 3	32	V	
D/ST Pin Voltage	$V_{D/ST}$		8 − 3	− 1 to V_{DSS}	V	
Power MOSFET Allowable Power Dissipation(5)	P_{D1}	When mounted on a PCB of 15 mm × 15 mm	8 − 1	1.35	W	
Control Part Allowable Power Dissipation	P_{D2}		5 − 3	1.2	W	
Operating Ambient Temperature	T_{OP}		−	− 40 to 125	°C	
Storage Temperature	T_{STG}		−	− 40 to 125	°C	
Channel Temperature	T_{ch}		−	150	°C	

(1) See Section 4.3.
(2) The Maximum Switching Current is the drain current determined by the drive voltage of the IC and threshold voltage of the MOSFET, $V_{GS(th)}$.
(3) See Figure 4-2.
(4) Single pulse, V_{DD} = 99 V, L = 20 mH
(5) See Section 4.2 T_A-P_{D1}Curve.

© SANKEN ELECTRIC CO., LTD. 2014

2. Electrical Characteristics

Current polarities are defined as follows: current going into the IC (sinking) is positive current (+); and current coming out of the IC (sourcing) is negative current (−).

Unless specifically noted, T_A = 25 °C, V_{CC} = 18 V, 7 pin = 8 pin.

Parameter	Symbol	Test Conditions	Pins	Min.	Typ.	Max.	Units	Notes
Power Supply Startup Operation								
Operation Start Voltage	$V_{CC(ON)}$		5 − 3	13.8	15.0	16.2	V	
Operation Stop Voltage(*)	$V_{CC(OFF)}$		5 − 3	7.6	8.5	9.2	V	
Circuit Current in Operation	$I_{CC(ON)}$	V_{CC} = 12 V	5 − 3	−	1.5	2.5	mA	
Startup Circuit Operation Voltage	$V_{ST(ON)}$		8 − 3	40	47	55	V	
Startup Current	$I_{CC(ST)}$	V_{CC} = 13.5 V	5 − 3	− 4.5	− 2.5	− 1.2	mA	
Startup Current Biasing Threshold Voltage	$V_{CC(BIAS)}$	I_{CC} = −500 µA	5 − 3	8.0	9.6	10.5	V	
Normal Operation								
Average Switching Frequency	$f_{OSC(AVG)}$		8 − 3	60	67	73	kHz	A60××MZ
				90	100	110		A60××HZ
Switching Frequency Modulation Deviation	Δf		8 − 3	−	5.4	−	kHz	A60××MZ
				−	8.4	−		A60××HZ
Maximum Feedback Current	$I_{FB(MAX)}$	V_{CC} = 12 V	4 − 3	− 170	− 130	− 85	µA	
Minimum Feedback Current	$I_{FB(MIN)}$		4 − 3	− 21	− 13	− 5	µA	
Standby Operation								
FB/OLP Pin Oscillation Stop Threshold Voltage	$V_{FB(OFF)}$		4 − 3	1.06	1.16	1.26	V	
Brown-in /Brown-out Function								
Brown-in Threshold Voltage	$V_{BR(IN)}$		2 − 3	5.43	5.60	5.77	V	
Brown-out Threshold Voltage	$V_{BR(OUT)}$		2 − 3	4.65	4.80	4.95	V	
BR Pin Clamp Voltage	$V_{BR(CLAMP)}$	I_{BR} = 100 µA	2 − 3	6.5	6.9	7.3	V	
BR Function Disabling Threshold Voltage	$V_{BR(DIS)}$		2 − 3	0.4	0.6	0.8	V	
Protection								
Maximum Duty Cycle	D_{MAX}		8 − 3	70	75	80	%	
Leading Edge Blanking (LEB) Time	t_{BW}		−	−	330	−	ns	
OCP Compensation Coefficient	DPC		−	−	17.3	−	mV/µs	A60××MZ
				−	25.8	−		A60××HZ
OCP Compensation Duty Cycle	D_{DPC}		−	−	36	−	%	
OCP Threshold Voltage at Zero Duty Cycle	$V_{OCP(L)}$		1 − 3	0.735	0.795	0.855	V	
OCP Threshold Voltage at 36% Duty Cycle	$V_{OCP(H)}$		1 − 3	0.843	0.888	0.933	V	
OCP Threshold Voltage in LEB Time	$V_{OCP(LEB)}$		1 − 3	−	1.69	−	V	

(*) $V_{CC(BIAS)} > V_{CC(OFF)}$ always.

© SANKEN ELECTRIC CO., LTD. 2014

Parameter	Symbol	Test Conditions	Pins	Min.	Typ.	Max.	Units	Notes
OLP Threshold Voltage	$V_{FB(OLP)}$		4 − 3	6.8	7.3	7.8	V	
OLP Delay Time	t_{OLP}		4 − 3	55	75	90	ms	
OLP Operation Current	$I_{CC(OLP)}$		5 − 3	−	220	−	μA	
FB/OLP Pin Clamp Voltage	$V_{FB(CLAMP)}$		4 − 3	10.5	11.8	13.5	V	
OVP Threshold Voltage	$V_{CC(OVP)}$		5 − 3	27.0	29.1	31.2	V	
TSD Operating Temperature	$T_{J(TSD)}$		−	127	145	−	°C	
TSD Temperature Hysteresis	$T_{J(TSD)HYS}$		−	−	80	−	°C	
MOSFET								
Drain-to-Source Breakdown Voltage	V_{DSS}	I_{DS} = 300 μA	8 − 1	700	−	−	V	
Drain Leakage Current	I_{DSS}	V_{DS} = 700 V	8 − 1	−	−	300	μA	
On-resistance	$R_{DS(ON)}$	I_{DS} = 0.4 A	8 − 1	−	−	6.0	Ω	A6069MZ /HZ
				−	−	3.95	Ω	A6061MZ /HZ
				−	−	2.3	Ω	A6063MZ /HZ
Switching Time	t_f		8 − 1	−	−	250	ns	
Thermal Resistance								
Channel-to-Case Thermal Resistance	θ_{ch-C}		−	−	−	22	°C/W	

3. Mechanical Characteristics

Parameter	Conditions	Min.	Typ.	Max.	Unit	Remarks
Package Weight		—	0.51	—	g	

© SANKEN ELECTRIC CO., LTD. 2014

4. Performance Curves

4.1 Derating Curves

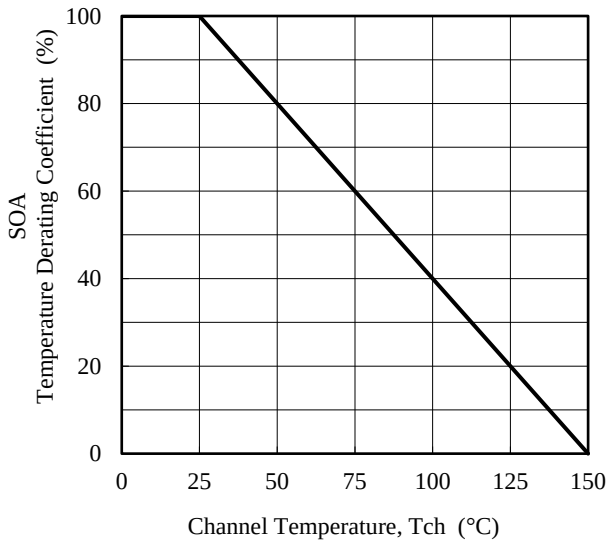

Figure 4-1 SOA Temperature Derating Coefficient Curve

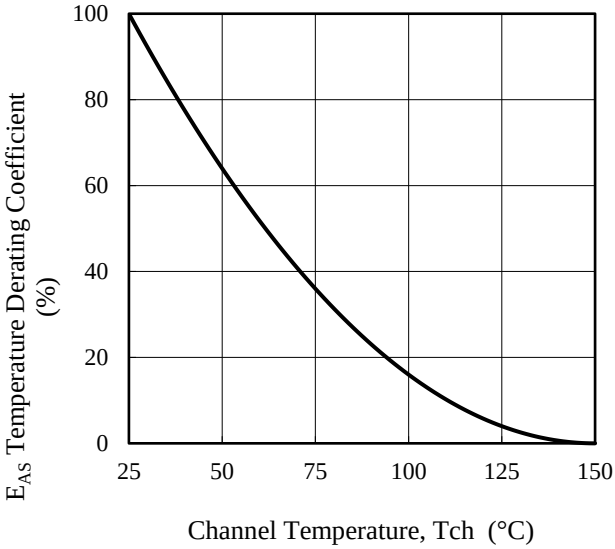

Figure 4-2 Avalanche Energy Derating Coefficient Curve

4.2 Ambient Temperature versus Power Dissipation Curve

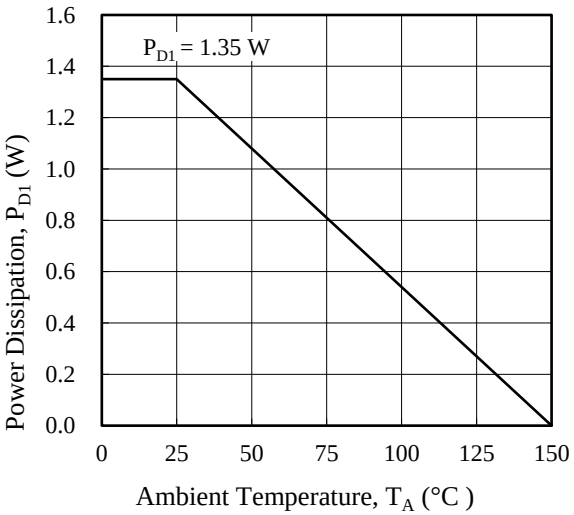

© SANKEN ELECTRIC CO., LTD. 2014

4.3 MOSFET Safe Operating Area Curves

When the IC is used, the safe operating area curve should be multiplied by the temperature derating coefficient derived from Figure 4-1.

The broken line in the safe operating area curve is the drain current curve limited by on-resistance.

Unless specifically noted, T_A = 25 °C, single pulse.

● **STR-A6061MZ/HZ**

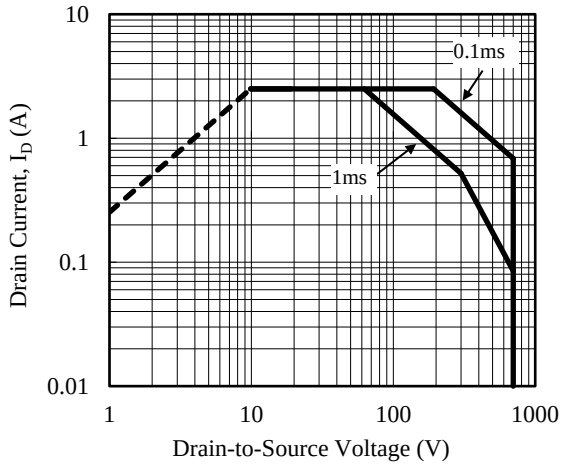

● **STR-A6063MZ/HZ**

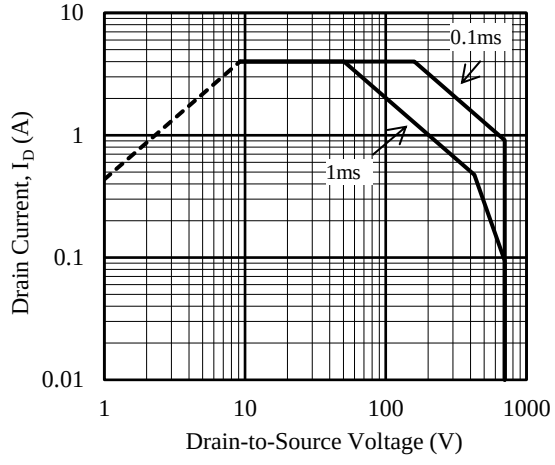

● **STR-A6069MZ/HZ**

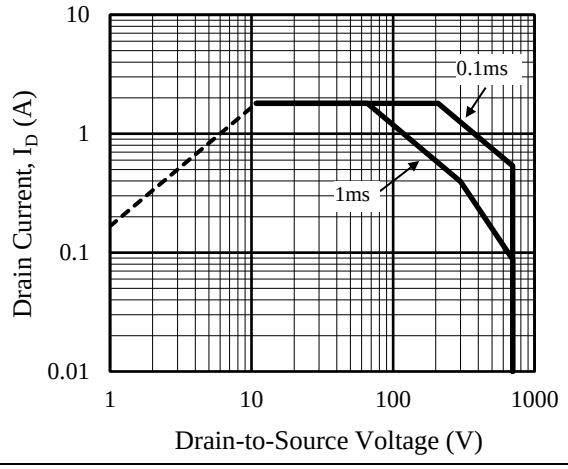

© SANKEN ELECTRIC CO., LTD. 2014

4.4 Transient Thermal Resistance Curves

● **STR-A6061MZ/HZ**

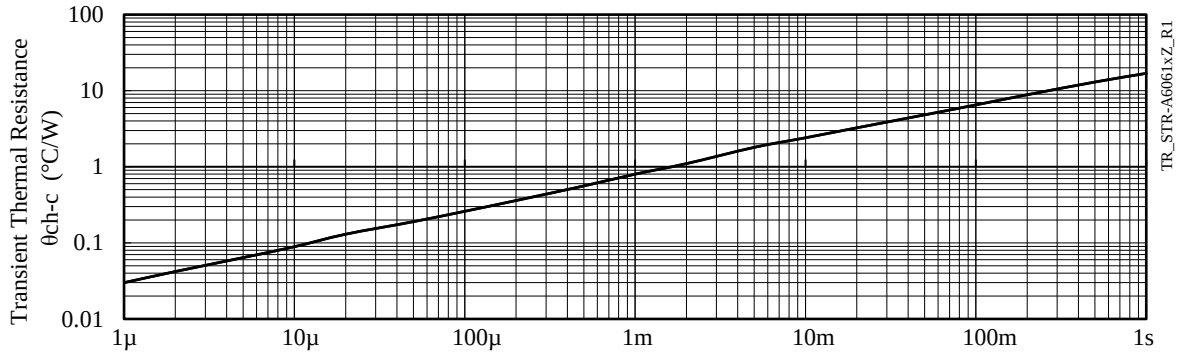

● **STR-A6063MZ/HZ**

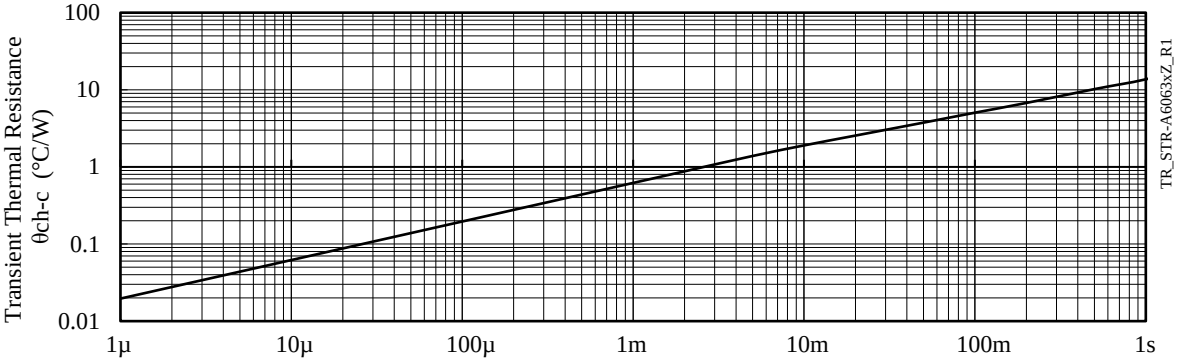

● **STR-A6069MZ/HZ**

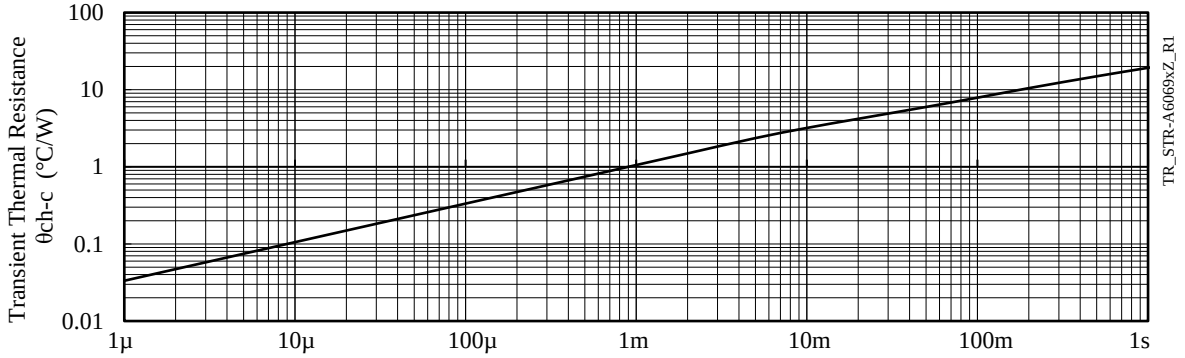

© SANKEN ELECTRIC CO., LTD. 2014

5. Block Diagram

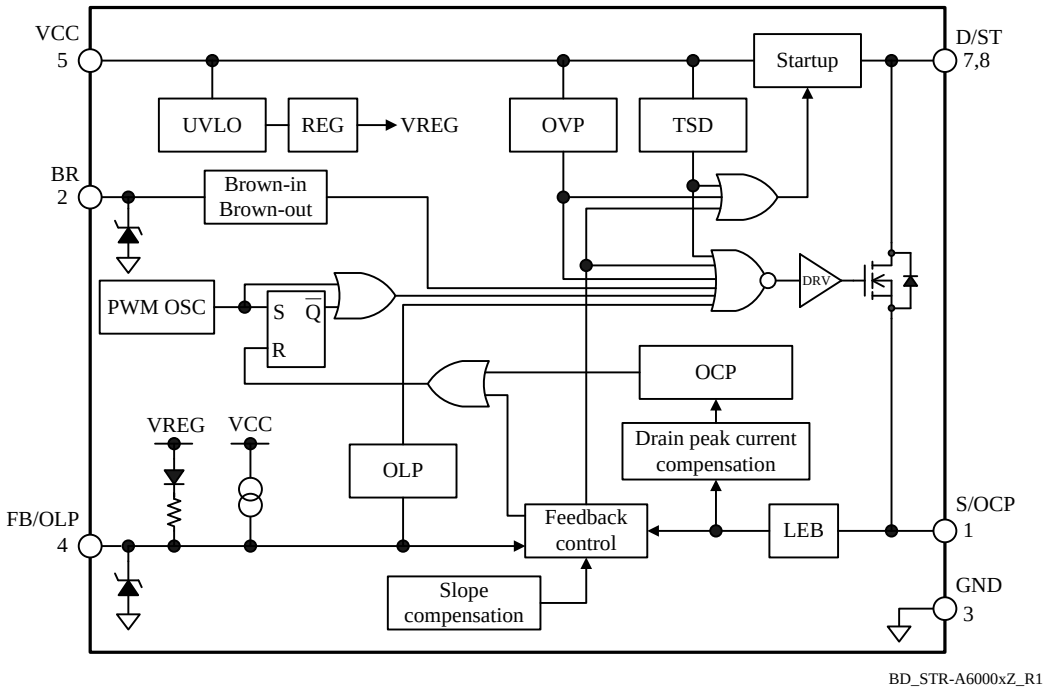

6. Pin Configuration Definitions

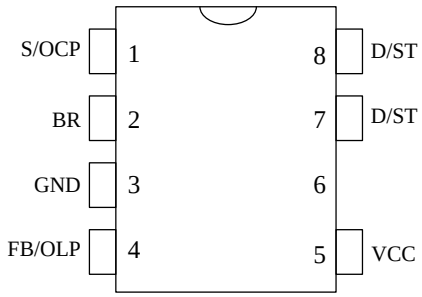

Pin Number	Pin Name	Description
1	S/OCP	Power MOSFET source; OCP signal input
2	BR	Brown-in and brown-out detection voltage input
3	GND	Ground
4	FB/OLP	Constant voltage control signal input; OLP signal input
5	VCC	Logic power supply input; OVP signal input
6	–	(Pin removed)
7	D/ST	Power MOSFET drain; startup current input
8		

© SANKEN ELECTRIC CO., LTD. 2014

7. Typical Applications

The following drawings show circuits enabled and disabled the Brown-in/Brown-out Function.
The PCB traces the D/ST pins should be as wide as possible, in order to enhance thermal dissipation.
In applications having a power supply specified such that the D/ST pin has large transient surge voltages, a clamp snubber circuit of a capacitor-resistor-diode (CRD) combination should be added on the primary winding P, or a damper snubber circuit of a capacitor (C) or a resistor-capacitor (RC) combination should be added between the D/ST pin and the S/OCP pin.

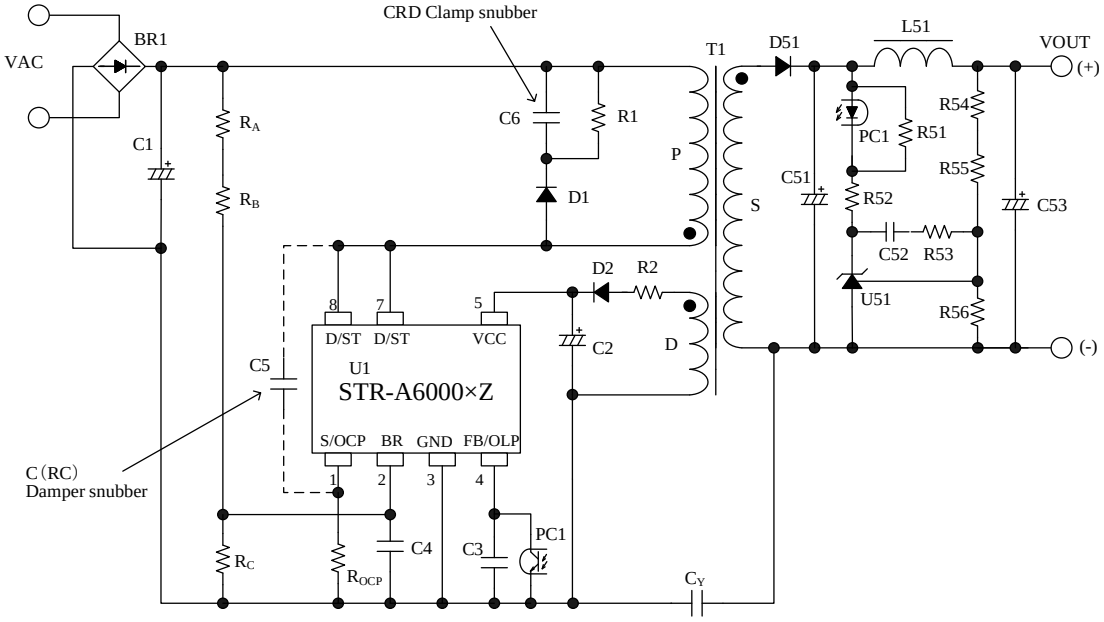

Figure 7-1 Typical Application (Enabled Brown-in/Brown-out Function, DC Line Detection)

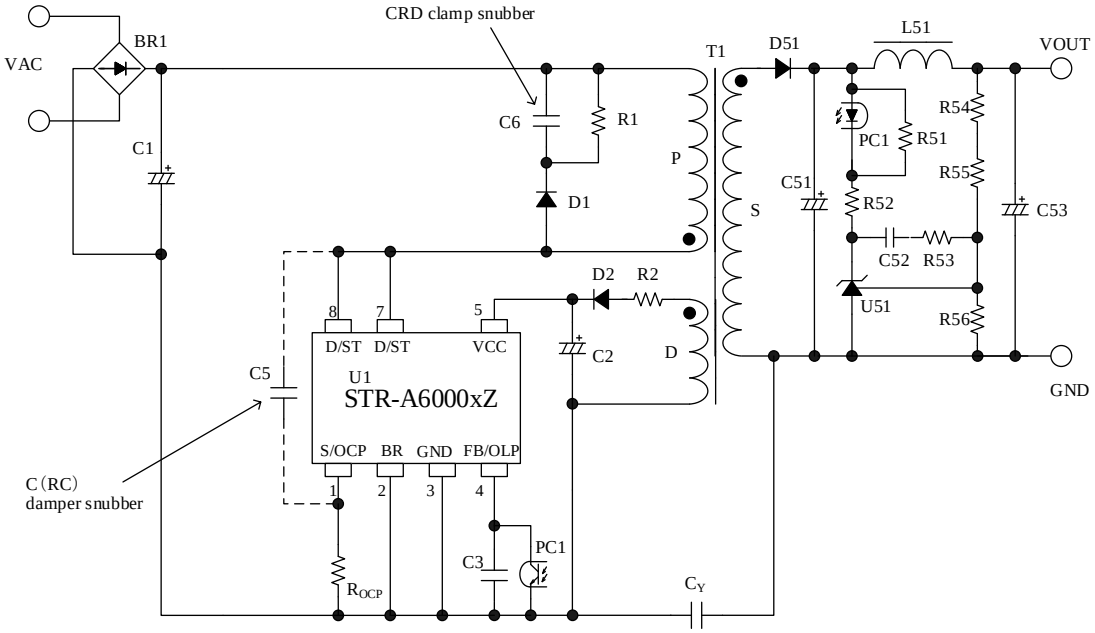

Figure 7-2 Typical Application (Disabled Brown-in/Brown-out Function)

© SANKEN ELECTRIC CO., LTD. 2014

8. Physical Dimensions

- DIP8

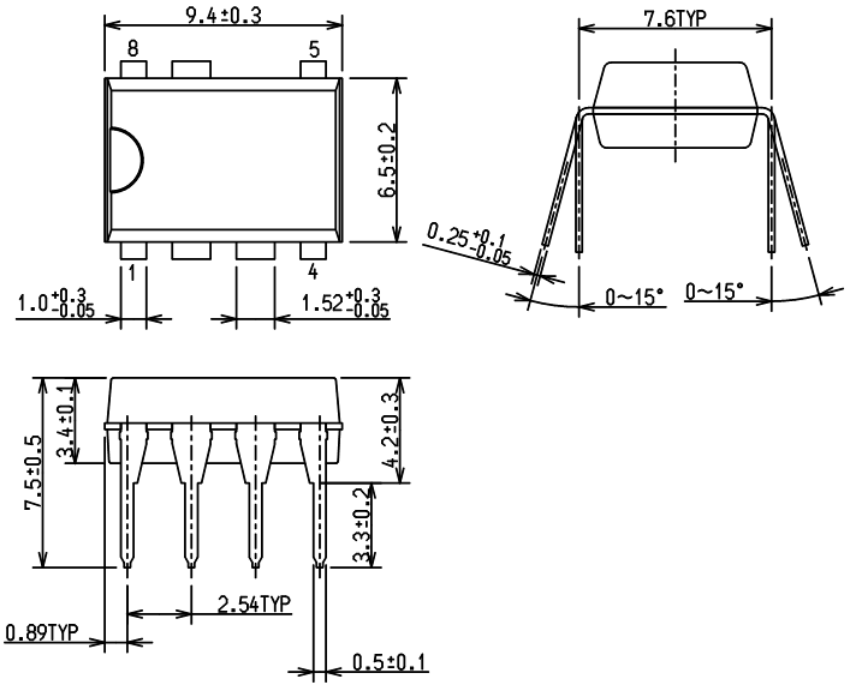

NOTES:

- All dimensions in millimeters
- Pb-free (RoHS compliant)
- When soldering the products, it is required to minimize the working time within the following limits:
  Flow: 260 °C / 10 s, 1 time
  Soldering Iron: 350 °C / 3.5 s, 1 time
  Soldering should be at a distance of at least 1.5 mm from the body of the product.

© SANKEN ELECTRIC CO., LTD. 2014

9. Marking Diagram

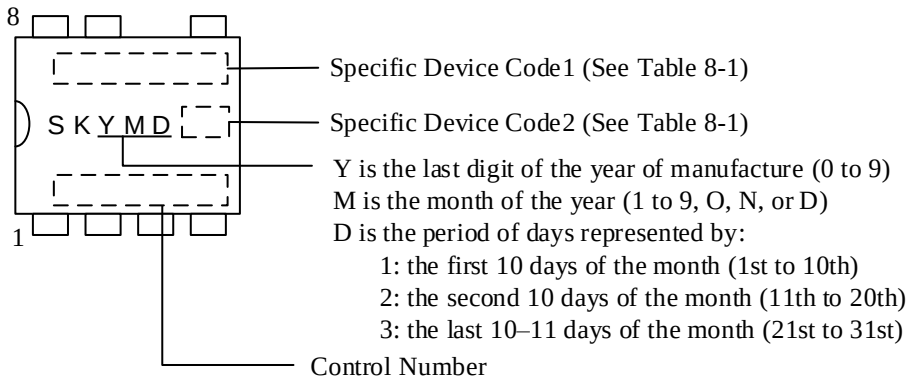

Table 9-1 Specific Device Code

Specific Device Code 1	Specific Device Code 2	Part Number
A6069M	Z	STR-A6069MZ
A6061M	Z	STR-A6061MZ
A6063M	Z	STR-A6063MZ
A6069H	Z	STR-A6069HZ
A6061H	Z	STR-A6061HZ
A6063H	Z	STR-A6063HZ

© SANKEN ELECTRIC CO., LTD. 2014

10. Operational Description

All the characteristic values given in this section are typical values, unless they are specified as minimum or maximum.

Current polarities are defined as follows: current going into the IC (sinking) is positive current (+); current coming out of the IC (sourcing) is negative current (−).

10.1 Startup Operation

Figure 10-1 shows the circuit around the IC.

The IC incorporates the startup circuit. The circuit is connected to the D/ST pin. When the D/ST pin voltage reaches to Startup Circuit Operation Voltage, $V_{ST(ON)}$ = 47 V, the startup circuit starts operation.

During the startup process, the constant current, $I_{CC(ST)}$ = − 2.5 mA, charges C2 at the VCC pin. When the VCC pin voltage increases to $V_{CC(ON)}$ = 15.0 V, the control circuit starts operation. During the IC operation, the voltage rectified the auxiliary winding voltage, V_D, of Figure 10-1 becomes a power source to the VCC pin. After switching operation begins, the startup circuit turns off automatically so that its current consumption becomes zero.

The approximate value of auxiliary winding voltage is about 15 V to 20 V, taking account of the winding turns of D winding so that VCC pin voltage becomes Equation (1) within the specification of input and output voltage variation of power supply.

$$V_{CC(BIAS)}(\text{max.}) < V_{CC} < V_{CC(OVP)}(\text{min.})$$

$$\Rightarrow 10.5\ (\text{V}) < V_{CC} < 27.0\ (\text{V}) \qquad (1)$$

The oscillation start timing of the IC depends on Brown-in / Brown-out Function (refer to Section 10.9).

10.1.1 Without Brown-in / Brown-out Function (BR pin voltage is $V_{BR(DIS)}$ = 0.6 V or less)

When VCC pin voltage increases to $V_{CC(ON)}$, the IC starts switching operation, As shown in Figure 10-2.

The startup time of the IC is determined by C2 capacitor value. The approximate startup time t_{START} (shown in Figure 10-2) is calculated as follows:

$$t_{START} = C2 \times \frac{V_{CC(ON)} - V_{CC(INT)}}{\left| I_{CC(ST)} \right|} \qquad (2)$$

where,

t_{START} : Startup time of the IC (s)

$V_{CC(INT)}$: Initial voltage on the VCC pin (V)

10.1.2 With Brown-in / Brown-out Function

When BR pin voltage is more than $V_{BR(DIS)}$ = 0.6 V and less than $V_{BR(IN)}$ = 5.60 V, the Bias Assist Function (refer to Section 10.3) is disabled. Thus, VCC pin voltage repeats increasing to $V_{CC(ON)}$ and decreasing to $V_{CC(OFF)}$ (shown in Figure 10-3). When the BR pin voltage becomes $V_{BR(IN)}$ or more, the IC starts switching operation.

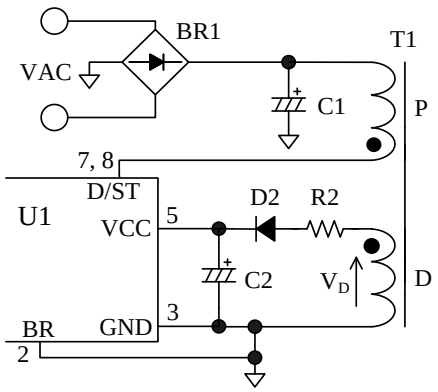

Figure 10-1 VCC Pin Peripheral Circuit (Without Brown-in / Brown-out Function)

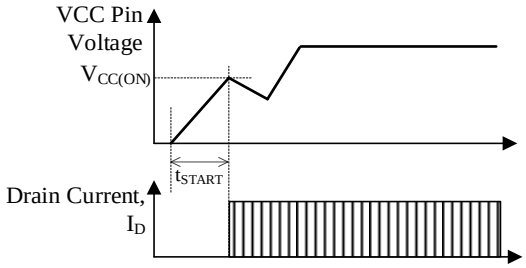

Figure 10-2 Startup Operation (Without Brown-in / Brown-out Function)

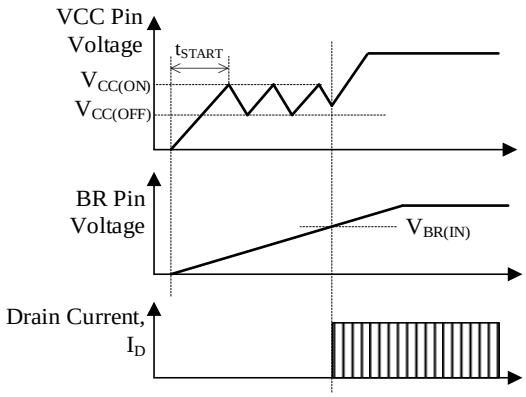

Figure 10-3 Startup Operation (With Brown-in / Brown-out Function)

© SANKEN ELECTRIC CO., LTD. 2014

10.2 Undervoltage Lockout (UVLO)

Figure 10-4 shows the relationship of VCC pin voltage and circuit current I_{CC}. When the VCC pin voltage decreases to $V_{CC(OFF)}$ = 8.5 V, the control circuit stops operation by the Undervoltage Lockout (UVLO) circuit, and reverts to the state before startup.

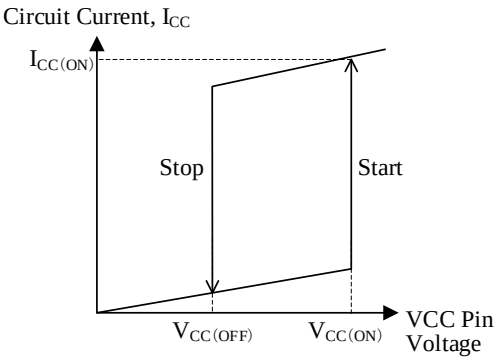

Figure 10-4 Relationship between VCC Pin Voltage and I_{CC}

10.3 Bias Assist Function

By the Bias Assist Function, the startup failure is prevented.

When FB pin voltage is the FB/OLP Pin Oscillation Stop Threshold Voltage, $V_{FB(OFF)}$= 1.16 V or less and VCC pin voltage decreases to the Startup Current Biasing Threshold Voltage, $V_{CC(BIAS)}$ = 9.6 V, the Bias Assist Function is activated.

When the Bias Assist Function is activated, the VCC pin voltage is kept almost constant voltage, $V_{CC(BIAS)}$ by providing the startup current, $I_{CC(ST)}$, from the startup circuit. Thus, the VCC pin voltage is kept more than $V_{CC(OFF)}$.

Since the startup failure is prevented by the Bias Assist Function, the value of C2 connected to the VCC pin can be small. Thus, the startup time and the response time of the Overvoltage Protection (OVP) become shorter.

The operation of the Bias Assist Function in startup is as follows. It is necessary to check and adjust the startup process based on actual operation in the application, so that poor starting conditions may be avoided.

Figure 10-5 shows the VCC pin voltage behavior during the startup period.

After the VCC pin voltage increases to $V_{CC(ON)}$ = 15.0 V at startup, the IC starts the operation. Then circuit current increases and the VCC pin voltage decreases. At the same time, the auxiliary winding voltage, V_D, increases in proportion to output voltage. These are all balanced to produce the VCC pin voltage.

When the VCC pin voltage is decrease to $V_{CC(OFF)}$ = 8.5 V in startup operation, the IC stops switching operation and a startup failure occurs.

When the output load is light at startup, the output voltage may become more than the target voltage due to the delay of feedback circuit. In this case, the FB pin voltage is decreased by the feedback control. When the FB pin voltage decreases to $V_{FB(OFF)}$ or less, the IC stops switching operation and the VCC pin voltage decreases. When the VCC pin voltage decreases to $V_{CC(BIAS)}$, the Bias Assist Function is activated and the startup failure is prevented.

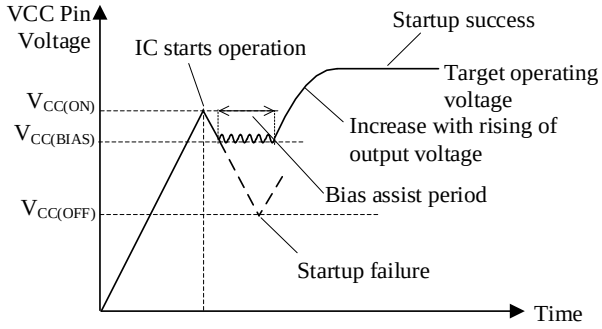

Figure 10-5 VCC Pin Voltage during Startup Period

10.4 Soft Start Function

Figure 10-6 shows the behavior of VCC pin voltage and drain current during the startup period.

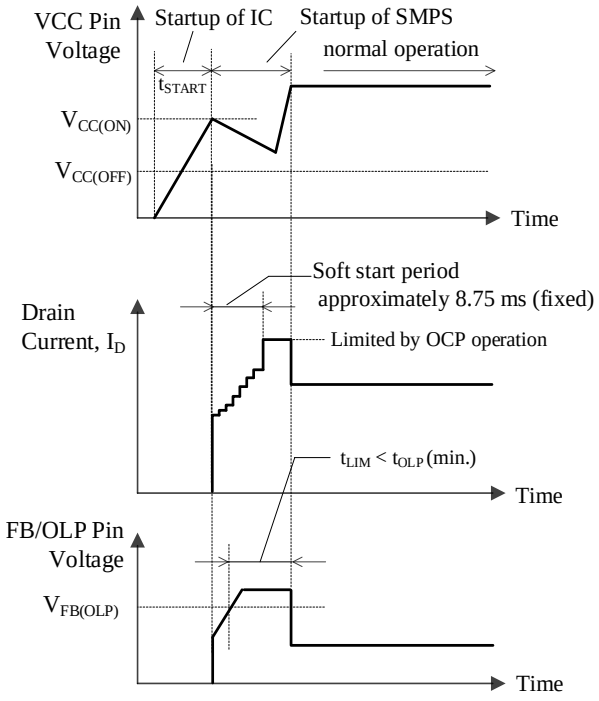

© SANKEN ELECTRIC CO., LTD. 2014

Figure 10-6 V_{CC} and I_D Waveforms during Startup

The IC activates the soft start circuitry during the startup period. Soft start time is fixed to around 8.75 ms. during the soft start period, over current threshold is increased step-wisely (7 steps). This function reduces the voltage and the current stress of a power MOSFET and a secondary-side rectifier diode.

Since the Leading Edge Blanking Function (refer to Section 0) is deactivated during the soft start period, there is the case that ON time is less than the leading edge blanking time, t_{BW} = 330 ns. After the soft start period, D/ST pin current, I_D, is limited by the Overcurrent Protection (OCP), until the output voltage increases to the target operating voltage. This period is given as t_{LIM}. In case t_{LIM} is longer than the OLP Delay Time, t_{OLP}, the output power is limited by the Overload Protection (OLP). Thus, it is necessary to adjust the value of output capacitor and the turn ratio of auxiliary winding D so that the t_{LIM} is less than t_{OLP} = 55 ms (min.).

10.5 Constant Output Voltage Control

The IC achieves the constant voltage control of the power supply output by using the current-mode control method, which enhances the response speed and provides the stable operation.

FB/OLP pin voltage is internally added the slope compensation at the feedback control (refer to Section 5.Functionnal Block Diagram), and the target voltage, V_{SC}, is generated. The IC compares the voltage, V_{ROCP}, of a current detection resistor with the target voltage, V_{SC}, by the internal FB comparator, and controls the peak value of V_{ROCP} so that it gets close to V_{SC}, as shown in Figure 10-7 and Figure 10-8.

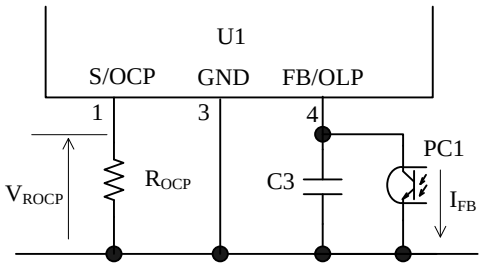

Figure 10-7 FB/OLP Pin Peripheral Circuit

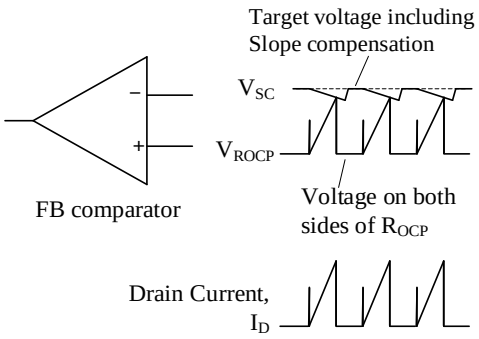

Figure 10-8 Drain Current, I_D, and FB Comparator Operation in Steady Operation

- Light load conditions
  When load conditions become lighter, the output voltage, V_{OUT}, increases. Thus, the feedback current from the error amplifier on the secondary side also increases. The feedback current is sunk at the FB/OLP pin, transferred through a photo-coupler, PC1, and the FB/OLP pin voltage decreases. Thus, V_{SC} decreases, and the peak value of V_{ROCP} is controlled to be low, and the peak drain current of I_D decreases.
  This control prevents the output voltage from increasing.

- Heavy load conditions
  When load conditions become greater, the IC performs the inverse operation to that described above. Thus, V_{SC} increases and the peak drain current of I_D increases.
  This control prevents the output voltage from decreasing.

In the current mode control method, when the drain current waveform becomes trapezoidal in continuous operating mode, even if the peak current level set by the target voltage is constant, the on-time fluctuates based on the initial value of the drain current.

This results in the on-time fluctuating in multiples of the fundamental operating frequency as shown in Figure 10-9. This is called the subharmonics phenomenon.

In order to avoid this, the IC incorporates the Slope Compensation Function. Because the target voltage is added a down-slope compensation signal, which reduces the peak drain current as the on-duty gets wider relative to the FB/OLP pin signal to compensate V_{SC}, the subharmonics phenomenon is suppressed.

Even if subharmonic oscillations occur when the IC has some excess supply being out of feedback control, such as during startup and load shorted, this does not affect performance of normal operation.

© SANKEN ELECTRIC CO., LTD. 2014

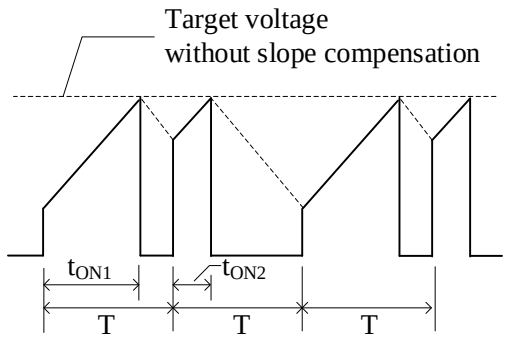

Figure 10-9 Drain Current, I_D, Waveform in Subharmonic Oscillation

10.6 Leading Edge Blanking Function

The constant voltage control of output of the IC uses the peak-current-mode control method.

In the peak-current-mode control method, there is a case that a power MOSFET turns off due to unexpected response of the FB comparator or Overcurrent Protection circuit (OCP) to the steep surge current in turning on the power MOSFET.

In order to prevent this response to the surge voltage in turning-on the power MOSFET, the Leading Edge Blanking Time, t_{BW} = 330 ns is built-in. During t_{BW}, the OCP threshold voltage becomes $V_{OCP(LEB)}$ = 1.69 V in order not to respond to the turn-on drain current surge (refer to Section 10.10).

10.7 Random Switching Function

The IC modulates its switching frequency randomly by superposing the modulating frequency on $f_{OSC(AVG)}$ in normal operation. This function reduces the conduction noise compared to others without this function, and simplifies noise filtering of the input lines of power supply.

10.8 Automatic Standby Mode Function

Automatic standby mode is activated automatically when FB/OLP pin voltage decreases to $V_{FB(OFF)}$ = 1.16 V.

The operation mode becomes burst oscillation, as shown in Figure 10-10. Burst oscillation mode reduces switching losses and improves power supply efficiency because of periodic non-switching intervals.

Generally, to improve efficiency under light load conditions, the frequency of the burst oscillation mode becomes just a few kilohertz. Because the IC suppresses the peak drain current well during burst oscillation mode, audible noises can be reduced.

If the VCC pin voltage decreases to $V_{CC(BIAS)}$ = 9.6 V during the transition to the burst oscillation mode, the Bias Assist Function is activated and stabilizes the Standby mode operation, because $I_{CC(ST)}$ is provided to the VCC pin so that the VCC pin voltage does not decrease to $V_{CC(OFF)}$.

However, if the Bias Assist Function is always activated during steady-state operation including standby mode, the power loss increases. Therefore, the VCC pin voltage should be more than $V_{CC(BIAS)}$, for example, by adjusting the turns ratio of the auxiliary winding and secondary-side winding and/or reducing the value of R2 (refer to Section 11.1).

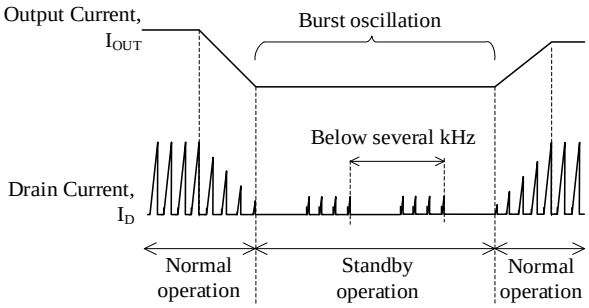

Figure 10-10 Automatic Standby Mode Timing

10.9 Brown-in and Brown-out Function

This function stops switching operation when it detects low input line voltage, and thus prevents excessive input current and overheating.

This function turns on and off switching operation according to BR pin voltage detecting the AC input voltage. When the BR pin voltage becomes more than $V_{BR(DIS)}$ = 0.6 V, this function is activated.

Figure 10-11 shows waveforms of the BR pin voltage and the drain currnet.

Even if the IC is in the operating state that the VCC pin voltage is $V_{CC(OFF)}$ or more, when the AC input voltage decreases from steady-state and the BR pin voltage falls to $V_{BR(OUT)}$ = 4.80 V or less for the OLP Delay Time, t_{OLP} = 75 ms, the IC stops switching operation.

When the AC input voltage increases and the BR pin voltage reaches $V_{BR(IN)}$ = 5.60 V or more in the operating state that VCC pin voltage is $V_{CC(OFF)}$ or more, the IC starts switching operation.

When the Brown-in and Brown-out Function is unnecessary, connect the BR pin trace to the GND pin trace so that the BR pin voltage is $V_{BR(DIS)}$ or less.

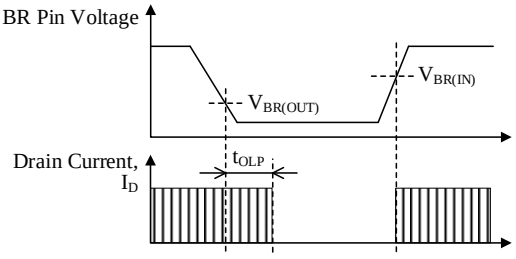

© SANKEN ELECTRIC CO., LTD. 2014

Figure 10-11 BR Pin Voltage and Drain Current Waveforms

$V_{BR(TH)}$: Any one of threshold voltage of the BR pin (see Table 10-1)

There are two types of detection method as follows:

10.9.1 DC Line Detection

Figure 10-12 shows the BR pin peripheral circuit of DC line detection. There is a ripple voltage on C1 occurring at a half period of AC cycle. In order to detect each peak of the ripple voltage, the time constant of R_C and C4 should be shorter than a half period of AC cycle.

Since the cycle of the ripple voltage is shorter than t_{OLP}, the switching operation does not stop when only the bottom part of the ripple voltage becomes lower than $V_{BR(OUT)}$.

Thus it minimizes the influence of load conditions on the voltage detection.

The components around the BR pin:

- R_A and R_B are a few megohms. Because of high voltage applied and high resistance, it is recommended to select a resistor designed against electromigration or use a combination of resistors in series for that to reduce each applied voltage, according to the requirement of the application.
- R_C is a few hundred kilohms
- C4 is 470 pF to 2200 pF for high frequency noise reduction

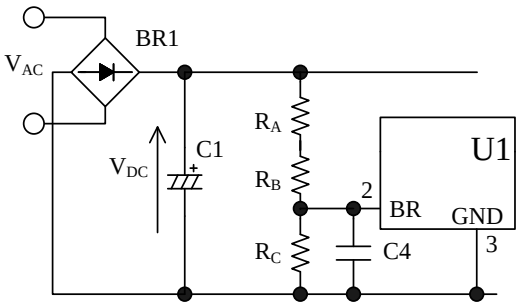

Figure 10-12 DC Line Detection

Neglecting the effect of both input resistance and forward voltage of rectifier diode, the reference value of C1 voltage when the Brown-in and Brown-out Function is activated is calculated as follows:

$$V_{DC(OP)} = V_{BR(TH)} \times \left(1 + \frac{R_A + R_B}{R_C}\right) \quad (3)$$

where,

$V_{DC(OP)}$: C1 voltage when the Brown-in and Brown-out Function is activated

Table 10-1 BR Pin Threshold Voltage

Parameter	Symbol	Value (Typ.)
Brown-in Threshold Voltage	$V_{BR(IN)}$	5.60 V
Brown-out Threshold Voltage	$V_{BR(OUT)}$	4.80 V

$V_{DC(OP)}$ can be expressed as the effective value of AC input voltage using Equation (4).

$$V_{AC(OP)RMS} = \frac{1}{\sqrt{2}} \times V_{DC(OP)} \quad (4)$$

R_A, R_B, R_C and C4 should be selected based on actual operation in the application.

10.9.2 AC Line Detection

Figure 10-13 shows the BR pin peripheral circuit of AC line detection. In order to detect the AC input voltage, the time constant of R_C and C4 should be longer than the period of AC cycle. Thus the response of the BR pin detection becomes slow compared with the DC line detection. This method detects the AC input voltage, and thus it minimizes the influence from load conditions. Also, this method is free of influence from C1 charging and discharging time.

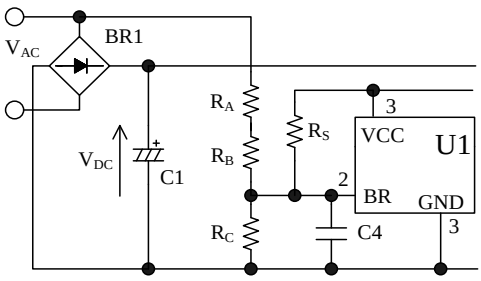

Figure 10-13 AC Line Detection

The components around the BR pin:

- R_A and R_B are a few megohms. Because of high voltage applied and high resistance, it is recommended to select a resistor designed against electromigration or use a combination of resistors in series for that to reduce each applied voltage,

© SANKEN ELECTRIC CO., LTD. 2014

according to the requirement of the application.

- R_C is a few hundred kilohms
- R_S must be adjusted so that the BR pin voltage is more than $V_{BR(DIS)}$ = 0.6 V when the VCC pin voltage is $V_{CC(OFF)}$ = 8.5 V
- C4 is 0.22 µF to 1 µF for averaging AC input voltage and high frequency noise reduction

Neglecting the effect of input resistance is zero, the reference effective value of AC input voltage when the Brown-in and Brown-out Function is activated is calculated as follows:

$$V_{AC(OP)RMS} = \frac{\pi}{\sqrt{2}} \times V_{BR(TH)} \times \left(1 + \frac{R_A + R_B}{R_C}\right) \quad (5)$$

where,

$V_{AC(OP)RMS}$: The effective value of AC input voltage when the Brown-in and Brown-out Function is activated

$V_{BR(TH)}$: Any one of threshold voltage of the BR pin (see Table 10-1)

R_A, R_B, R_C and C4 should be selected based on actual operation in the application.

10.10 Overcurrent Protection (OCP)

Overcurrent Protection (OCP) detects each drain peak current level of a power MOSFET on pulse-by-pulse basis, and limits the output power when the current level reaches to OCP threshold voltage.

During the Leading Edge Blanking Time, the OCP threshold voltage becomes $V_{OCP(LEB)}$ = 1.69 V which is higher than the normal OCP threshold voltage as shown in Figure 10-14. Changing to this threshold voltage prevents the IC from responding to the surge voltage in turning-on the power MOSFET. This function operates as protection at the condition such as output windings shorted or unusual withstand voltage of secondary-side rectifier diodes.

When the power MOSFET turns on, the surge voltage width of the S/OCP pin should be less than t_{BW}, as shown in Figure 10-14. In order to prevent surge voltage, pay extra attention to R_{OCP} trace layout (refer to Section 11.2).

In addition, if a C (RC) damper snubber of Figure 10-15 is used, reduce the capacitor value of damper snubber.

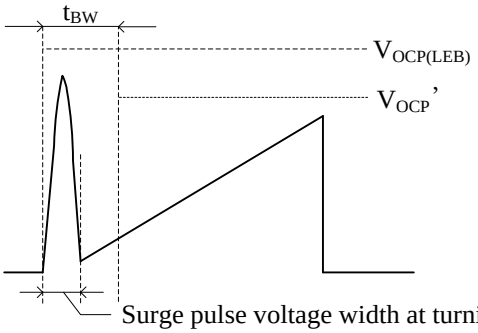

Figure 10-14 S/OCP Pin Voltage

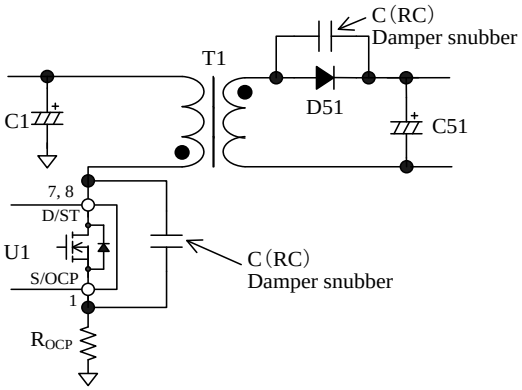

Figure 10-15 Damper Snubber

< Input Compensation Function >

ICs with PWM control usually have some propagation delay time. The steeper the slope of the actual drain current at a high AC input voltage is, the larger the detection voltage of actual drain peak current is, compared to V_{OCP}. Thus, the peak current has some variation depending on the AC input voltage in OCP state. In order to reduce the variation of peak current in OCP state, the IC incorporates a built-in Input Compensation Function. The Input Compensation Function is the function of correction of the OCP threshold voltage depending with AC input voltage, as shown in Figure 10-16.

When AC input voltage is low (ON Duty is broad), the OCP threshold voltage is controlled to become high. The difference of peak drain current become small compared with the case where the AC input voltage is high (ON Duty is narrow).

© SANKEN ELECTRIC CO., LTD. 2014

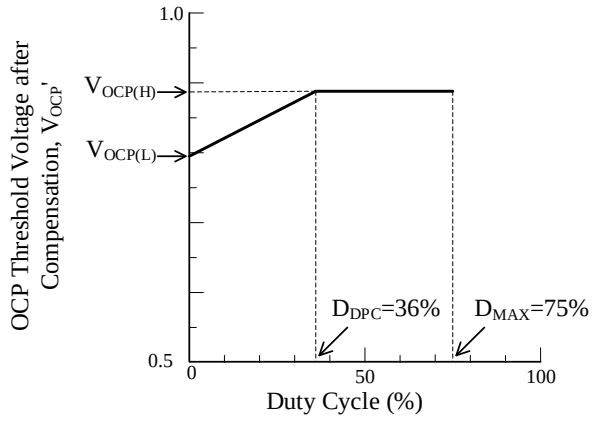

Figure 10-16 Relationship between Duty Cycle and Drain Current Limit after Compensation

The compensation signal depends on ON Duty. The relation between the ON Duty and the OCP threshold voltage after compensation V_{OCP}' is expressed as Equation (6). When ON Duty is broader than 36 %, the V_{OCP}' becomes a constant value $V_{OCP(H)}$ = 0.888 V

$$V_{OCP}' = V_{OCP(L)} + DPC \times ONTime$$

$$= V_{OCP(L)} + DPC \times \frac{ONDuty}{f_{OSC(AVG)}} \quad (6)$$

where,
$V_{OCP(L)}$: OCP Threshold Voltage at Zero ON Duty (V)
DPC: OCP Compensation Coefficient (mV/μs)
ONTime: On-time of a power MOSFET (μs)
ONDuty: On duty of a power MOSFET (%)
$f_{OSC(AVG)}$: Average PWM Switching Frequency (kHz)

10.11 Overload Protection (OLP)

Figure 10-17 shows the FB/OLP pin peripheral circuit, and Figure 10-18 shows each waveform for Overload Protection (OLP) operation.

When the peak drain current of I_D is limited by Overcurrent Protection operation, the output voltage, V_{OUT}, decreases and the feedback current from the secondary-side optocoupler becomes zero. Thus, the feedback current, I_{FB}, charges C3 connected to the FB/OLP pin and FB/OLP pin voltage increases. When the FB/OLP pin voltage increases to $V_{FB(OLP)}$ = 7.3 V or more for the OLP delay time, t_{OLP} = 75 ms or more, the OLP is activated, the IC stops switching operation.

During OLP operation, the Bias Assist Function is disabled. Thus, VCC pin voltage decreases to $V_{CC(OFF)}$, the control circuit stops operation. After that, the IC reverts to the initial state by UVLO circuit, and the IC starts operation when the VCC pin voltage increases to $V_{CC(ON)}$ by startup current. Thus, the intermittent operation by UVLO is repeated in OLP state.

This intermittent operation reduces the stress of parts such as a power MOSFET and a secondary-side rectifier diode. In addition, this operation reduces power consumption because the switching period in this intermittent operation is short compared with oscillation stop period. When the abnormal condition is removed, the IC returns to normal operation automatically.

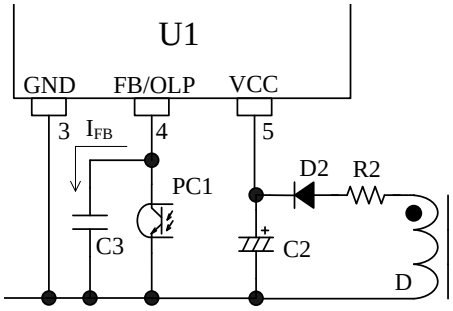

Figure 10-17 FB/OLP Pin Peripheral Circuit

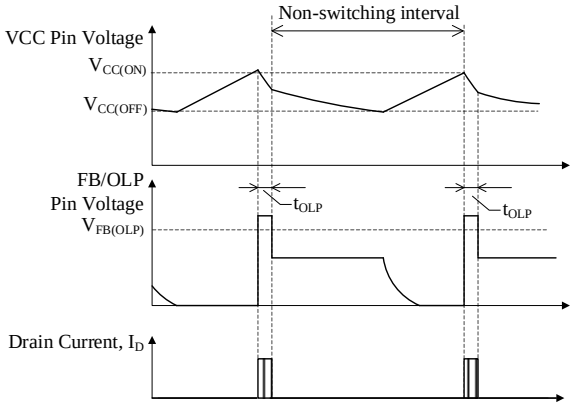

Figure 10-18 OLP Operational Waveforms

10.12 Overvoltage Protection (OVP)

When the voltage between the VCC pin and the GND pin increases to $V_{CC(OVP)}$ = 29.1 V or more, Overvoltage Protection (OVP) is activated and the IC stops switching operation.

During OVP operation, the Bias Assist Function is disabled, the intermittent operation by UVLO is repeated (refer to Section 10.11). When the fault condition is removed, the IC returns to normal operation automatically (refer to Figure 10-19). When VCC pin voltage is provided by using auxiliary winding of transformer, the overvoltage conditions such as output voltage detection circuit open can be detected because the VCC pin voltage is proportional to output voltage. The approximate value of output voltage $V_{OUT(OVP)}$ in OVP condition is calculated by using Equation (7).

© SANKEN ELECTRIC CO., LTD. 2014

$$V_{OUT(OVP)} = \frac{V_{OUT(NORMAL)}}{V_{CC(NORMAL)}} \times 29.1(V) \quad (7)$$

where,
$V_{OUT(NORMAL)}$: Output voltage in normal operation
$V_{CC(NORMAL)}$: VCC pin voltage in normal operation

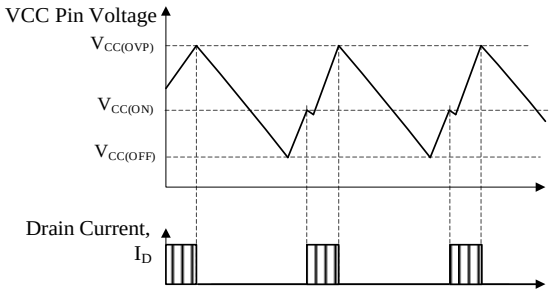

Figure 10-19 OVP Operational Waveforms

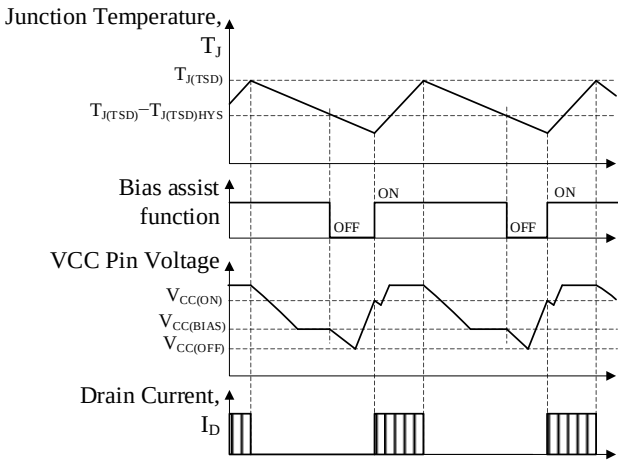

Figure 10-20 TSD Operational Waveforms

10.13 Thermal Shutdown (TSD)

Figure 10-20 shows the Thermal Shutdown (TSD) operational waveforms.

When the temperature of control circuit increases to $T_{J(TSD)}$ = 145 °C or more, TSD is activated, and the IC stops switching operation. After that, VCC pin voltage decreases. When the VCC pin voltage decreases to $V_{CC(BIAS)}$, the Bias Assist Function is activated and the VCC pin voltage is kept to over the $V_{CC(OFF)}$.

When the temperature reduces to less than $T_{J(TSD)}-T_{J(TSD)HYS}$, the Bias Assist Function is disabled and the VCC pin voltage decreases to $V_{CC(OFF)}$. At that time, the IC stops operation by the UVLO circuit and reverts to the state before startup. After that, the startup circuit is activated, the VCC pin voltage increases to $V_{CC(ON)}$, and the IC starts switching operation again. In this way, the intermittent operation by TSD and UVLO is repeated while there is an excess thermal condition.

When the fault condition is removed, the IC returns to normal operation automatically.

11. Design Notes

11.1 External Components

Take care to use properly rated, including derating as necessary and proper type of components.

- **Input and Output Electrolytic Capacitor**
  Apply proper derating to ripple current, voltage, and temperature rise. Use of high ripple current and low impedance types, designed for switch mode power supplies, is recommended.

- **S/OCP Pin Peripheral Circuit**
  In Figure 11-1, R_{OCP} is the resistor for the current detection. A high frequency switching current flows to R_{OCP}, and may cause poor operation if a high inductance resistor is used. Choose a low inductance and high surge-tolerant type.

© SANKEN ELECTRIC CO., LTD. 2014

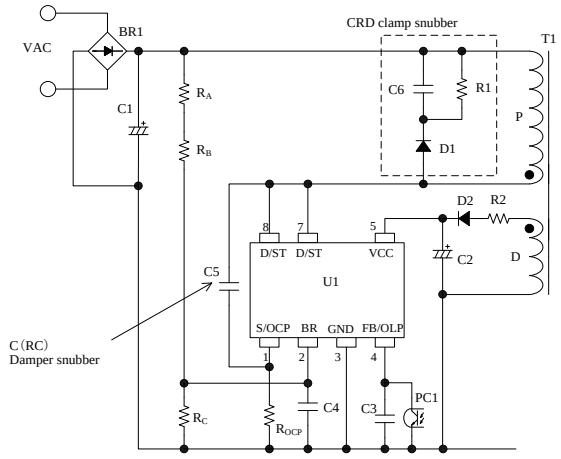

Figure 11-1 The IC Peripheral Circuit

- **BR pin peripheral circuit**

Because R_A and R_B (see Figure 11-1) are applied high voltage and are high resistance, the following should be considered according to the requirement of the application:

- Select a resistor designed against electromigration, or
- Use a combination of resistors in series for that to reduce each applied voltage

See Section 10.9 about the AC input voltage detection function and the components around the BR pin.

- **FB/OLP Pin Peripheral Circuit**

C3 (see Figure 11-1) is for high frequency noise rejection and phase compensation, and should be connected close to the FB/OLP pin and the GND pin. The value of C3 is recommended to be about 2200 pF to 0.01 µF, and should be selected based on actual operation in the application.

- **VCC Pin Peripheral Circuit**

The value of C2 is generally recommended to be 10 µF to 47 µF (refer to Section 10.1 Startup Operation, because the startup time is determined by the value of C2).

In actual power supply circuits, there are cases in which VCC pin voltage fluctuates in proportion to the output current, I_{OUT} (see Figure 11-2), and the Overvoltage Protection (OVP) on the VCC pin may be activated. This happens because C2 is charged to a peak voltage on the auxiliary winding D, which is caused by the transient surge voltage coupled from the primary winding when a power MOSFET turns off.

For alleviating C2 peak charging, it is effective to add some value R2, of several tenths of ohms to several ohms, in series with D2 (see Figure 11-1). The optimal value of R2 should be determined using a transformer matching what will be used in the actual application, because the variation of the auxiliary winding voltage is affected by the transformer structural design.

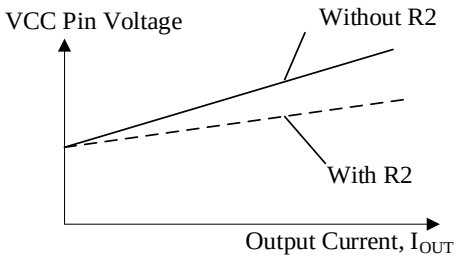

Figure 11-2 Variation of VCC Pin Voltage and Power

- **Snubber Circuit**

If the surge voltage of V_{DS} is large, the circuit should be added as follows (see Figure 11-1);

- A clamp snubber circuit of a capacitor-resistor- diode (CRD) combination should be added on the primary winding P.
- A damper snubber circuit of a capacitor (C) or a resistor-capacitor (RC) combination should be added between the D/ST pin and the S/GND pin.
  When the damper snubber circuit is added, this components should be connected near the D/ST pin and the S/OCP pin.

- **Phase Compensation**

A typical phase compensation circuit with a secondary-side shunt regulator (U51) is shown in Figure 11-3.

C52 and R53 are for phase compensation. The value of C52 and R53 are recommended to be around 0.047µF to 0.47µF and 4.7 kΩ to 470 kΩ, respectively. They should be selected based on actual operation in the application.

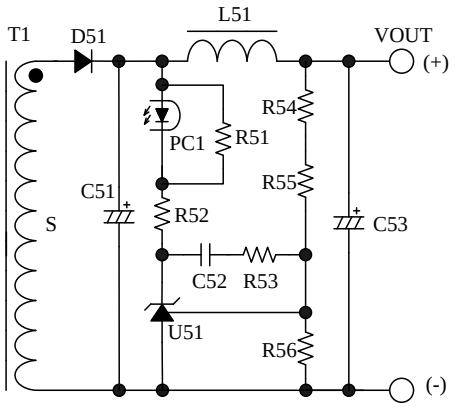

Figure 11-3 Peripheral Circuit of Secondary-side Shunt Regulator (U51)

- **Transformer**

© SANKEN ELECTRIC CO., LTD. 2014

Apply proper design margin to core temperature rise by core loss and copper loss.
Because the switching currents contain high frequency currents, the skin effect may become a consideration.
Choose a suitable wire gauge in consideration of the RMS current and a current density of 4 to 6 A/mm^2.
If measures to further reduce temperature are still necessary, the following should be considered to increase the total surface area of the wiring:
- Increase the number of wires in parallel.
- Use litz wires.
- Thicken the wire gauge.

In the following cases, the surge of VCC pin voltage becomes high.
- The surge voltage of primary main winding, P, is high (low output voltage and high output current power supply designs)
- The winding structure of auxiliary winding, D, is susceptible to the noise of winding P.

When the surge voltage of winding D is high, the VCC pin voltage increases and the Overvoltage Protection (OVP) may be activated. In transformer design, the following should be considered;
- The coupling of the winding P and the secondary output winding S should be maximized to reduce the leakage inductance.
- The coupling of the winding D and the winding S should be maximized.
- The coupling of the winding D and the winding P should be minimized.

In the case of multi-output power supply, the coupling of the secondary-side stabilized output winding, S1, and the others (S2, S3…) should be maximized to improve the line-regulation of those outputs.

Figure 11-4 shows the winding structural examples of two outputs.
Winding structural example (a):
S1 is sandwiched between P1 and P2 to maximize the coupling of them for surge reduction of P1 and P2.
D is placed far from P1 and P2 to minimize the coupling to the primary for the surge reduction of D.

Winding structural example (b)
P1 and P2 are placed close to S1 to maximize the coupling of S1 for surge reduction of P1 and P2.
D and S2 are sandwiched by S1 to maximize the coupling of D and S1, and that of S1 and S2. This structure reduces the surge of D, and improves the line-regulation of outputs.

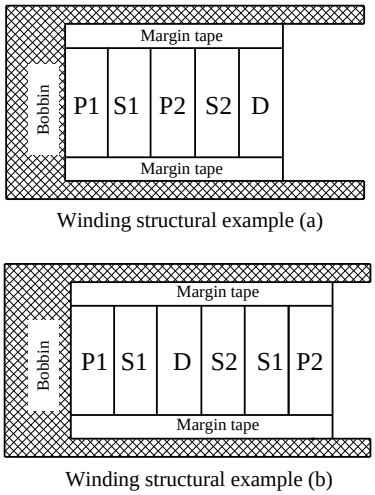

Figure 11-4 Winding Structural Examples

11.2 PCB Trace Layout and Component Placement

Since the PCB circuit trace design and the component layout significantly affects operation, EMI noise, and power dissipation, the high frequency PCB trace should be low impedance with small loop and wide trace.

In addition, the ground traces affect radiated EMI noise, and wide, short traces should be taken into account.

Figure 11-5 shows the circuit design example.

(1) Main Circuit Trace Layout
This is the main trace containing switching currents, and thus it should be as wide trace and small loop as possible.
If C1 and the IC are distant from each other, placing a capacitor such as film capacitor (about 0.1 μF and with proper voltage rating) close to the transformer or the IC is recommended to reduce impedance of the high frequency current loop.

(2) Control Ground Trace Layout
Since the operation of the IC may be affected from the large current of the main trace that flows in control ground trace, the control ground trace should be separated from main trace and connected at a single point grounding of the point A in Figure 11-5 as close to the R_{OCP} pin as possible.

(3) VCC Trace Layout:
This is the trace for supplying power to the IC, and thus it should be as small loop as possible. If C2 and the IC are distant from each other or additional capacitors for noise suppression are required, placing a high-frequency ceramic capacitor equivalent to X7R (about 0.1 μF to 1.0 μF) close to the VCC and GND

© SANKEN ELECTRIC CO., LTD. 2014

pins is recommended..

(4) R_{OCP} Trace Layout

R_{OCP} should be placed as close as possible to the S/OCP pin. The connection between the power ground of the main trace and the IC ground should be at a single point ground (point A in Figure 11-5) which is close to the base of R_{OCP}.

(5) Peripheral components of the IC

The components for control connected to the IC should be placed as close as possible to the IC, and should be connected as short as possible to the each pin.

(6) Secondary-side Rectifier Smoothing Circuit Trace Layout:

This is the trace of the rectifier smoothing loop, carrying the switching current, and thus it should be as wide trace and small loop as possible. If this trace is thin and long, inductance resulting from the loop may increase surge voltage at turning off a power MOSFET. Proper rectifier smoothing trace layout helps to increase margin against the power MOSFET breakdown voltage, and reduces stress on the clamp snubber circuit and losses in it.

(7) Thermal Considerations

Because the power MOSFET has a positive thermal coefficient of $R_{DS(ON)}$, consider it in thermal design.

Since the copper area under the IC and the D/ST pin trace act as a heatsink, its traces should be as wide as possible.

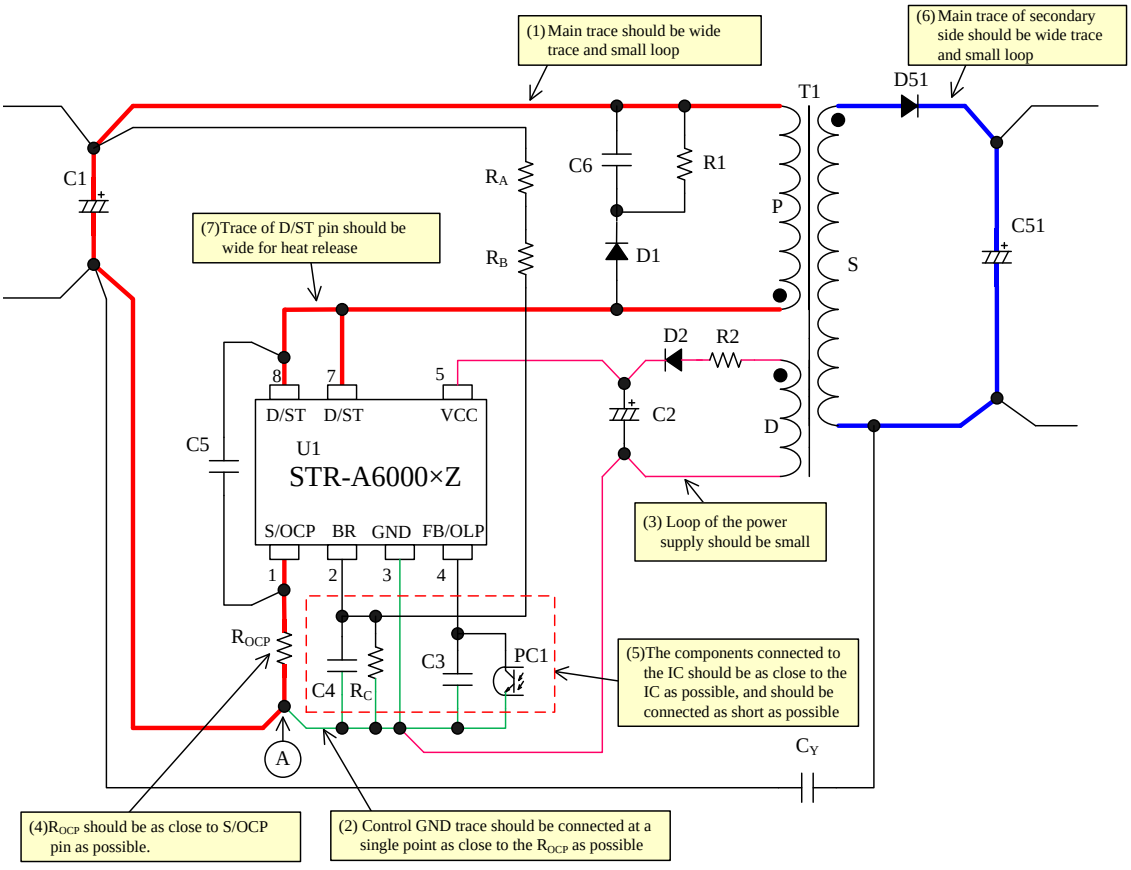

Figure 11-5 Peripheral Circuit Example Around the IC

© SANKEN ELECTRIC CO., LTD. 2014

12. Pattern Layout Example

The following show the PCB pattern layout example and the schematic of circuit using the STR-A6000MZ/HZ series. The PCB pattern layout example is made usable to other ICs in common. The parts in Figure 12-2 are only used.

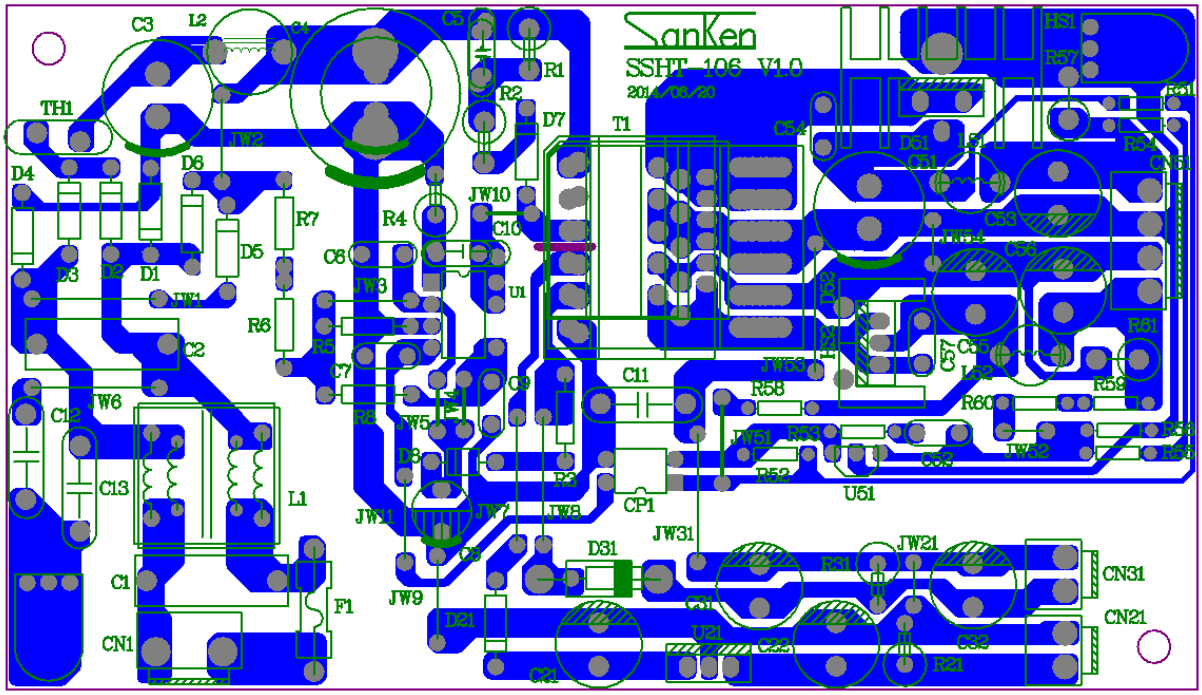

Figure 12-1 PCB Circuit Trace Layout Example

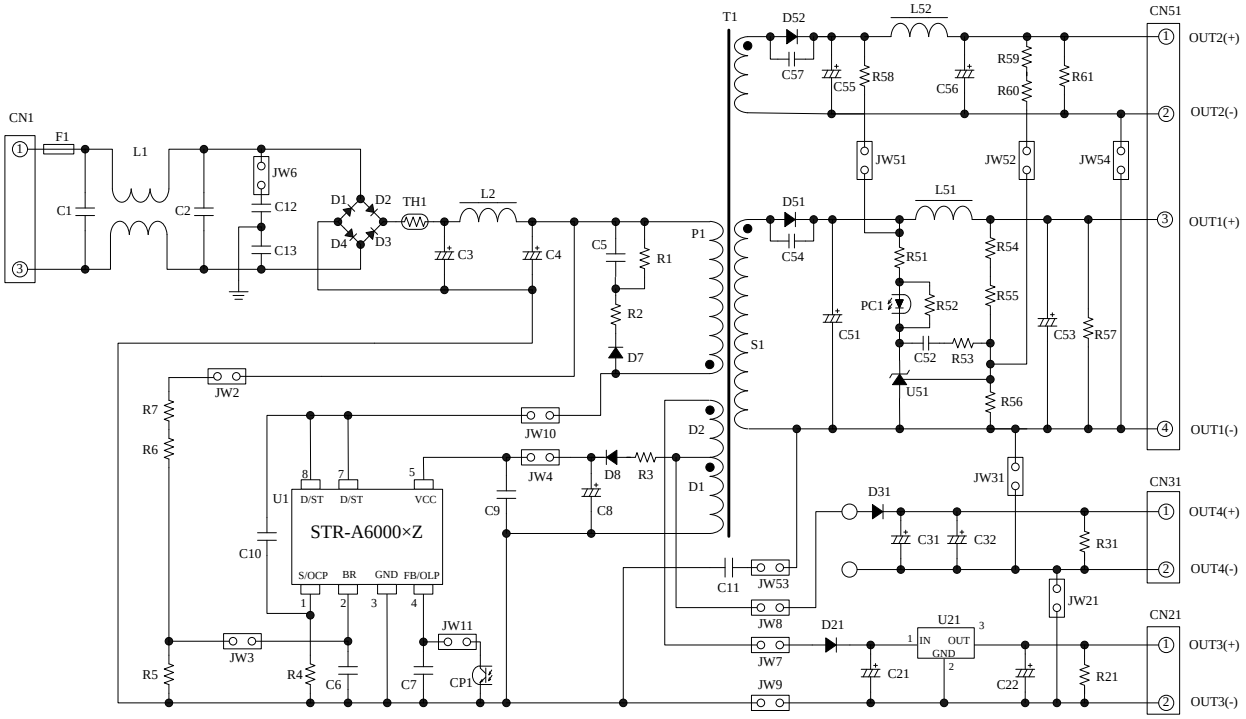

Figure 12-2 Circuit Schematic for PCB Circuit Trace Layout

© SANKEN ELECTRIC CO., LTD. 2014

13. Reference Design of Power Supply

As an example, the following show the power supply specification, the circuit schematic, the bill of materials, and the transformer specification.

● Circuit schematic

IC	STR-A6069HZ
Input voltage	AC85V to AC265V
Maximum output power	7.5 W
Output voltage	5 V
Output current	1.5 A (max.)

● Circuit schematic

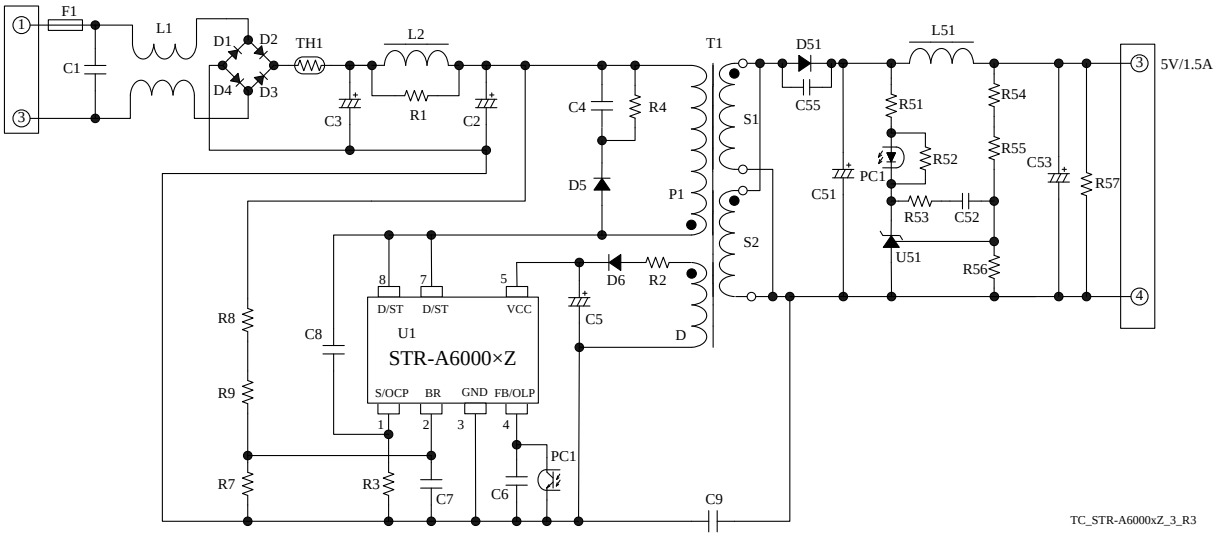

© SANKEN ELECTRIC CO., LTD. 2014

● Bill of materials

Symbol	Part type	Ratings[1]	Recommended Sanken Parts	Symbol	Part type	Ratings[1]	Recommended Sanken Parts
F1	Fuse	AC250V, 3A		R4 [3]	Metal oxide	330kΩ, 1W	
L1 [2]	CM inductor	3.3mH		R7	General	330kΩ	
L2 [2]	Inductor	470μH		R8 [3]	General	2.2MΩ	
TH1 [2]	NTC thermistor	Short		R9 [3]	General	2.2MΩ	
D1	General	600V, 1A	EM01A	PC1	Photo-coupler	PC123 or equiv	
D2	General	600V, 1A	EM01A	U1	IC	—	STR-A6069HZ
D3	General	600V, 1A	EM01A	T1	Transformer	See the specification	
D4	General	600V, 1A	EM01A	L51	Inductor	5μH	
D5	Fast recovery	1000V, 0.5A	EG01C	D51	Schottky	90V, 4A	FMB-G19L
D6	Fast recovery	200V, 1A	AL01Z	C51	Electrolytic	680μF, 10V	
C1 [2]	Film, X2	0.047μF, 275V		C52 [2]	Ceramic	0.1μF, 50V	
C2	Electrolytic	10μF, 400V		C53	Electrolytic	330μF, 10V	
C3	Electrolytic	10μF, 400V		C55 [2]	Ceramic	1000pF, 1kV	
C4	Ceramic	1000pF, 630V		R51	General	220Ω	
C5	Electrolytic	22μF, 50V		R52	General	1.5kΩ	
C6 [2]	Ceramic	0.01μF		R53 [2]	General	22kΩ	
C7 [2]	Ceramic	1000pF		R54	General, 1%	Short	
C8 [2]	Ceramic	Open		R55	General, 1%	10kΩ	
C9	Ceramic, Y1	2200pF, 250V		R56	General, 1%	10kΩ	
R1 [2]	General	Open		R57	General	Open	
R2 [2]	General	4.7Ω		U51	Shunt regulator	V_{REF}=2.5V TL431 or equiv	
R3	General	1.5Ω, 1/2W					

[1] Unless otherwise specified, the voltage rating of capacitor is 50 V or less and the power rating of resistor is 1/8 W or less.
[2] It is necessary to be adjusted based on actual operation in the application.
[3] Resistors applied high DC voltage and of high resistance are recommended to select resistors designed against electromigration or use combinations of resistors in series for that to reduce each applied voltage, according to the requirement of the application.

© SANKEN ELECTRIC CO., LTD. 2014

● Transformer specification
- Primary inductance, L_P : 704 μH
- Core size : EI-16
- Al-value : 132 nH/N^2 (Center gap of about 0.26 mm)
- Winding specification

Winding	Symbol	Number of turns (T)	Wire diameter(mm)	Construction
Primary winding	P1	73	2UEW-φ0.18	Two-layer, solenoid winding
Auxiliary winding	D	17	2UEW-φ0.18×2	Single-layer, solenoid winding
Output winding	S1	6	TEX-φ0.3×2	Single-layer, solenoid winding
Output winding	S2	6	TEX-φ0.3×2	Single-layer, solenoid winding

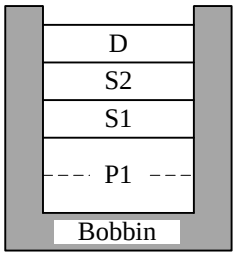

Cross-section view

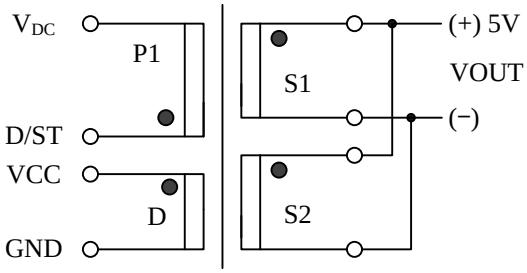

●: Start at this pin

© SANKEN ELECTRIC CO., LTD. 2014

Important Notes

- All data, illustrations, graphs, tables and any other information included in this document (the "Information") as to Sanken's products listed herein (the "Sanken Products") are current as of the date this document is issued. The Information is subject to any change without notice due to improvement of the Sanken Products, etc. Please make sure to confirm with a Sanken sales representative that the contents set forth in this document reflect the latest revisions before use.
- The Sanken Products are intended for use as components of general purpose electronic equipment or apparatus (such as home appliances, office equipment, telecommunication equipment, measuring equipment, etc.). Prior to use of the Sanken Products, please put your signature, or affix your name and seal, on the specification documents of the Sanken Products and return them to Sanken. When considering use of the Sanken Products for any applications that require higher reliability (such as transportation equipment and its control systems, traffic signal control systems or equipment, disaster/crime alarm systems, various safety devices, etc.), you must contact a Sanken sales representative to discuss the suitability of such use and put your signature, or affix your name and seal, on the specification documents of the Sanken Products and return them to Sanken, prior to the use of the Sanken Products. The Sanken Products are not intended for use in any applications that require extremely high reliability such as: aerospace equipment; nuclear power control systems; and medical equipment or systems, whose failure or malfunction may result in death or serious injury to people, i.e., medical devices in Class III or a higher class as defined by relevant laws of Japan (collectively, the "Specific Applications"). Sanken assumes no liability or responsibility whatsoever for any and all damages and losses that may be suffered by you, users or any third party, resulting from the use of the Sanken Products in the Specific Applications or in manner not in compliance with the instructions set forth herein.
- In the event of using the Sanken Products by either (i) combining other products or materials or both therewith or (ii) physically, chemically or otherwise processing or treating or both the same, you must duly consider all possible risks that may result from all such uses in advance and proceed therewith at your own responsibility.
- Although Sanken is making efforts to enhance the quality and reliability of its products, it is impossible to completely avoid the occurrence of any failure or defect or both in semiconductor products at a certain rate. You must take, at your own responsibility, preventative measures including using a sufficient safety design and confirming safety of any equipment or systems in/for which the Sanken Products are used, upon due consideration of a failure occurrence rate and derating, etc., in order not to cause any human injury or death, fire accident or social harm which may result from any failure or malfunction of the Sanken Products. Please refer to the relevant specification documents and Sanken's official website in relation to derating.
- No anti-radioactive ray design has been adopted for the Sanken Products.
- The circuit constant, operation examples, circuit examples, pattern layout examples, design examples, recommended examples, all information and evaluation results based thereon, etc., described in this document are presented for the sole purpose of reference of use of the Sanken Products.
- Sanken assumes no responsibility whatsoever for any and all damages and losses that may be suffered by you, users or any third party, or any possible infringement of any and all property rights including intellectual property rights and any other rights of you, users or any third party, resulting from the Information.
- No information in this document can be transcribed or copied or both without Sanken's prior written consent.
- Regarding the Information, no license, express, implied or otherwise, is granted hereby under any intellectual property rights and any other rights of Sanken.
- Unless otherwise agreed in writing between Sanken and you, Sanken makes no warranty of any kind, whether express or implied, including, without limitation, any warranty (i) as to the quality or performance of the Sanken Products (such as implied warranty of merchantability, and implied warranty of fitness for a particular purpose or special environment), (ii) that any Sanken Product is delivered free of claims of third parties by way of infringement or the like, (iii) that may arise from course of performance, course of dealing or usage of trade, and (iv) as to the Information (including its accuracy, usefulness, and reliability).
- In the event of using the Sanken Products, you must use the same after carefully examining all applicable environmental laws and regulations that regulate the inclusion or use or both of any particular controlled substances, including, but not limited to, the EU RoHS Directive, so as to be in strict compliance with such applicable laws and regulations.
- You must not use the Sanken Products or the Information for the purpose of any military applications or use, including but not limited to the development of weapons of mass destruction. In the event of exporting the Sanken Products or the Information, or providing them for non-residents, you must comply with all applicable export control laws and regulations in each country including the U.S. Export Administration Regulations (EAR) and the Foreign Exchange and Foreign Trade Act of Japan, and follow the procedures required by such applicable laws and regulations.
- Sanken assumes no responsibility for any troubles, which may occur during the transportation of the Sanken Products including the falling thereof, out of Sanken's distribution network.
- Although Sanken has prepared this document with its due care to pursue the accuracy thereof, Sanken does not warrant that it is error free and Sanken assumes no liability whatsoever for any and all damages and losses which may be suffered by you resulting from any possible errors or omissions in connection with the Information.
- Please refer to our official website in relation to general instructions and directions for using the Sanken Products, and refer to the relevant specification documents in relation to particular precautions when using the Sanken Products.
- All rights and title in and to any specific trademark or tradename belong to Sanken and such original right holder(s).

DSGN-CEZ-16003

© SANKEN ELECTRIC CO., LTD. 2014

ENTEGRECİ

Bu belge www.entegreci.com üzerinden sunulmaktadır.

Elektronik komponent tedarikinde Entegreci

Entegreci, Eskişehir merkezli, Türkiye geneline satış yapan bir elektronik komponent mağazasıdır. Entegreler (IC), mikrodenetleyiciler, transistörler, diyotlar, pasif elemanlar, konnektörler, modüller ve geliştirme kartları tek adetten seri üretim adetlerine kadar satılır. Ürün sayfalarında güncel stok durumunu, fiyatı ve datasheet bağlantısını bulabilirsiniz.

Parça koduyla arama

Üretici parça numarasını yazın; stok ve fiyatı hemen görün.

www.entegreci.com

Ürün kategorileri

Entegreden kapasitöre tüm elektronik komponent kategorileri.

Kategorilere göz atın

Üreticiler

Aradığınız üreticinin ürünlerini tek sayfada inceleyin.

Üreticileri görün

Toplu alım ve teklif

Listede olmayan ya da yüksek adetli parçalar için teklif isteyin.

Teklif isteyin

www.entegreci.com | **destek@entegreci.com** | **0850 305 90 34**

Entegreci is an online electronic components store based in Türkiye. Search by manufacturer part number to see stock, prices and datasheets for integrated circuits, microcontrollers, transistors, passive components and connectors, or request a quote for parts that are not listed.

Bu sayfa Entegreci tarafından eklenmiştir. Belgenin önceki sayfaları asıl yayıncısına aittir ve içeriği değiştirilmemiştir; en güncel sürüm için belgenin yayıncısına başvurun.