TEXAS INSTRUMENTS

bq24707, bq24707A

SLUSA78C – JULY 2010 – REVISED JULY 2015

bq24707x 1-4 Cell Li+ Battery SMBus Charge Controller With Independent Comparator and Advanced Circuit Protection

1 Features

- SMBus Host-Controlled NMOS-NMOS Synchronous Buck Converter With Programmable 615 kHz, 750 kHz, and 885 kHz Switching Frequency
- Real-Time System Control on ILIM Pin to Limit Charge Current
- Enhanced Safety Features for Overvoltage Protection, Overcurrent Protection, Battery, Inductor, and MOSFET Short-Circuit Protection
- Programmable Input Current, Charge Voltage, Charge Current Limits
  - ±0.5% Charge Voltage Accuracy up to 19.2 V
  - ±3% Charge Current Accuracy up to 8.128 A
  - ±3% Input Current Accuracy up to 8.064 A
  - ±2% 20× Adapter Current or Charge Current Output Accuracy
- Programmable Adapter Detection and Indicator
- Independent Comparator With Internal Reference
- Integrated Soft-Start
- Integrated Loop Compensation
- AC Adapter Operating Range 5 V to 24 V
- 15-µA Off-State Battery Discharge Current
- 20-pin 3.5 mm × 3.5 mm QFN Package
- bq24707: $\overline{\text{ACOK}}$ Delay Default 1.3 s
- bq24707A: $\overline{\text{ACOK}}$ Delay Default 1.2 ms

2 Applications

- Portable Notebook Computers, UMPCs, Ultra-Thin Notebooks, and Netbooks
- Personal Digital Assistants
- Handheld Terminals
- Industrial and Medical Equipment
- Portable Equipment

3 Description

The bq24707 and bq24707A devices are high-efficiency, synchronous battery chargers, offering low component count for space-constrained, multi-chemistry battery charging applications.

SMBus controlled input current, charge current, and charge voltage DACs allow for very high regulation accuracies that can be easily programmed by the system power management micro-controller.

The IC uses the internal input current register or external ILIM pin to throttle down PWM modulation to reduce the charge current.

The IC provides an $\overline{\text{IFAULT}}$ output to alarm if any MOSFET fault or input over current occurs. This alarm output allows users to turn off input power selectors when the fault occurs. Meanwhile, an independent comparator with internal reference is available to monitor input current, output current, or output voltage.

The IC charges one-, two-, three-, or four-series Li+ cells, and is available in a 20-pin, 3.5 × 3.5 mm QFN package.

Device Information(1)

PART NUMBER	PACKAGE	BODY SIZE (NOM)
bq24707	VQFN (20)	3.50 mm × 3.50 mm
bq24707A		

(1) For all available packages, see the orderable addendum at the end of the data sheet.

Simplified Schematic

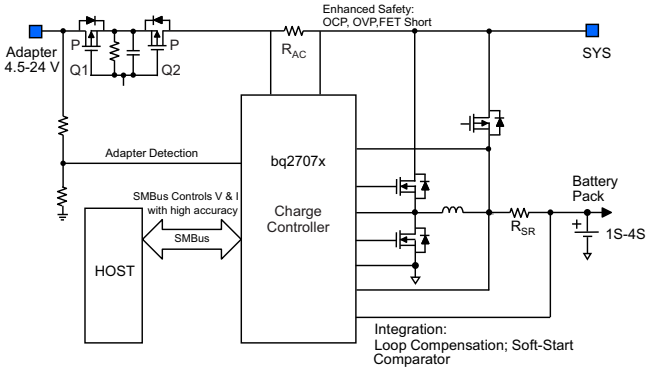

An IMPORTANT NOTICE at the end of this data sheet addresses availability, warranty, changes, use in safety-critical applications, intellectual property matters and other important disclaimers. PRODUCTION DATA.

Table of Contents

1 Features ... 1
2 Applications ... 1
3 Description ... 1
4 Revision History ... 2
5 Device Comparison Table ... 3
6 Pin Configuration and Functions ... 3
7 Specifications ... 5
7.1 Absolute Maximum Ratings ... 5
7.2 ESD Ratings ... 5
7.3 Recommended Operating Conditions ... 5
7.4 Thermal Information ... 5
7.5 Electrical Characteristics ... 6
7.6 Timing Requirements ... 10
7.7 Typical Characteristics ... 11
8 Detailed Description ... 14
8.1 Overview ... 14
8.2 Functional Block Diagram ... 15
8.3 Feature Description ... 16
8.4 Device Functional Modes ... 17
8.5 Programming ... 18
9 Application and Implementation ... 26
9.1 Application Information ... 26
9.2 Typical Application ... 26
10 Power Supply Recommendations ... 31
11 Layout ... 31
11.1 Layout Guidelines ... 31
11.2 Layout Example ... 33
12 Device and Documentation Support ... 35
12.1 Device Support ... 35
12.2 Documentation Support ... 35
12.3 Related Links ... 35
12.4 Community Resources ... 35
12.5 Trademarks ... 35
12.6 Electrostatic Discharge Caution ... 35
12.7 Glossary ... 35
13 Mechanical, Packaging, and Orderable Information ... 36

4 Revision History

NOTE: Page numbers for previous revisions may differ from page numbers in the current version.

Changes from Revision B (March 2011) to Revision C — **Page**

- Added *ESD Ratings* table, *Feature Description* section, *Device Functional Modes*, *Application and Implementation* section, *Power Supply Recommendations* section, *Layout* section, *Device and Documentation Support* section, and *Mechanical, Packaging, and Orderable Information* section ... 1

Changes from Revision A (November 2010) to Revision B — **Page**

- Added Features for the bq24707 and bq24707A ... 1
- Added device bq24707A to this data sheet ... 1
- Added bq24707A to the ORDERING INFORMATION table ... 3
- Added the COMPARISON TABLE ... 3
- Added bq24707 only to the test condition of $t_{ACOK_FALL_DEG}$ first row ... 10
- Added bq24707A only to the test condition of $t_{ACOK_FALL_DEG}$ second row ... 10
- Added (bq24707) to the title of Figure 2 ... 11
- Added a new paragraph in the Battery Over Voltage Protection (BATOVP) section ... 17
- Changed the Description of the $\overline{ACOK}$ Deglitch Time Adjust bit in Table 3 ... 20
- Changed the Adapter Detect and $\overline{ACOK}$ Output section. included 1.3s for bq24707 and 1.2ms for bq24707A ... 24
- Changed the Description of item U1 in Table 9 ... 30

Changes from Original (July 2010) to Revision A — **Page**

- Updated the description for the SRN and SRP pins ... 4
- Changed the Functional Block Diagram, Figure 16 ... 26
- Added Added section: Negative Output Voltage Protection ... 27
- Deleted C12, added R14 and R15 in Table 9 ... 30

Copyright © 2010–2015, Texas Instruments Incorporated

5 Device Comparison Table

CONDITION	bq24707	bq24707A
$\overline{\text{ACOK}}$ default delay	1.3 s	1.2 ms
Suggest fully charged battery ChargeVoltage() setting after termination	Full scale charge voltage(12.592 V for 3-S battery)	0 V
Suggest fully charged battery ChargeCurrent() setting after termination	0 A	0 A

6 Pin Configuration and Functions

RGR Package
20-Pin VQFN
Top View

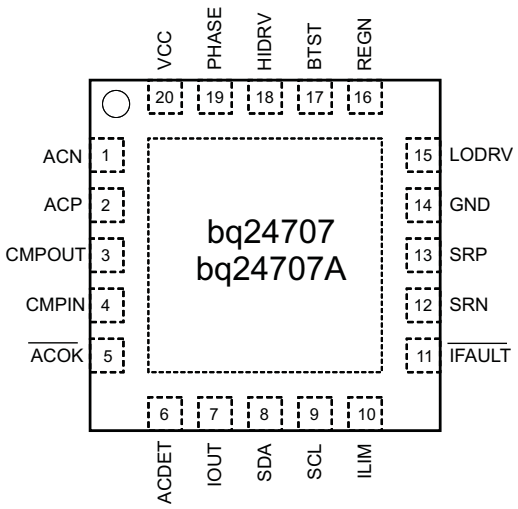

Pin Functions

PIN		DESCRIPTION
NAME	NO.	
ACDET	6	Adapter detection input. Program the adapter valid input threshold by connecting a resistor-divider from the adapter input to the ACDET pin to the GND pin. When the ACDET pin is above 0.6 V and VCC is above UVLO, REGN LDO is present, $\overline{\text{ACOK}}$ comparator and IOUT are both active.
ACN	1	Input current-sense resistor negative input. Place an optional 0.1-µF ceramic capacitor from ACN to GND for common-mode filtering. Place a 0.1-µF ceramic capacitor from ACN to ACP to provide differential-mode filtering.
$\overline{\text{ACOK}}$	5	AC adapter detect open-drain output. The output is pulled LOW to GND by an internal MOSFET when the voltage on the ACDET pin is above 2.4 V, voltage on the VCC pin is above UVLO and voltage on the VCC pin is 245 mV above the voltage on the SRN pin, indicating a valid adapter is present to start charge. If any one of the above conditions cannot meet, it is pulled HIGH to the external pullup supply rail by an external pullup resistor. Connect a 10-kΩ pullup resistor from the $\overline{\text{ACOK}}$ pin to the pullup supply rail.
ACP	2	Input current-sense resistor positive input. Place a 0.1-µF ceramic capacitor from ACP to GND for common-mode filtering. Place a 0.1-µF ceramic capacitor from ACN to ACP to provide differential-mode filtering.
BTST	17	High-side power MOSFET driver power supply. Connect a 0.047-µF capacitor from BTST to PHASE, and a bootstrap Schottky diode from REGN to BTST.
CMPIN	4	Input of independent comparator. The comparator has one 50-kΩ series resistor and one 2000-kΩ pulldown resistor. Program CMPIN voltage by connecting a resistor-divider from the IOUT pin to the CMPIN pin to the GND pin for adapter or charge current comparison or from the SRN pin to the CMPIN pin to the GND pin for battery voltage comparison. The internal reference is 0.6 V or 2.4 V, selectable by SMBus command ChargeOption(). When CMPIN is above the internal reference, CMPOUT goes HIGH. Place a resistor between CMPIN and CMPOUT to program hysteresis.
CMPOUT	3	Open-drain output of independent comparator. Place a 10-kΩ pullup resistor from CMPOUT to pullup supply rail. Internal reference is 0.6 V or 2.4 V, selectable by SMBus command ChargeOption(). When CMPIN is above the internal reference, CMPOUT goes HIGH. Place a resistor between CMPIN and CMPOUT to program hysteresis.

Copyright © 2010–2015, Texas Instruments Incorporated

Pin Functions (continued)

PIN		DESCRIPTION
NAME	NO.	
GND	14	IC ground. On PCB layout, connect to the analog ground plane, and only connect to power ground plane through the PowerPAD™ underneath the IC.
HIDRV	18	High-side power MOSFET driver output. Connect to the high-side N-channel MOSFET gate.
$\overline{\text{IFAULT}}$	11	Open-drain output. The output is pulled LOW by an internal MOSFET when ACOC or a short-circuit is detected. The output is pulled HIGH to the external pullup supply rail by an external pullup resistor in normal condition.
ILIM	10	Charge current-limit input. Program ILIM voltage by connecting a resistor-divider from the system reference 3.3-V rail to the ILIM pin to the GND pin. The lower of the ILIM voltage or DAC limit voltage sets the charge current regulation limit. To disable control on ILIM, set ILIM above 1.6 V. Once the voltage on the ILIM pin falls below 75 mV, charge is disabled. Charge is enabled when the ILIM pin rises above 105 mV.
IOUT	7	Buffered adapter or charge current output, selectable with SMBus command ChargeOption(). IOUT voltage is 20 times the differential voltage across the sense resistor. Place a 100-pF or less ceramic decoupling capacitor from the IOUT pin to GND.
LODRV	15	Low-side power MOSFET driver output. Connect to low-side N-channel MOSFET gate.
PHASE	19	High-side power MOSFET driver source. Connect to the source of the high-side N-channel MOSFET.
PowerPAD		Exposed pad beneath the IC. Analog ground and power ground star-connected only at the PowerPAD plane. Always solder PowerPAD to the board, and have vias on the PowerPAD plane connecting to analog ground and power ground planes. The pad also serves as a thermal pad to dissipate the heat.
REGN	16	Linear regulator output. REGN is the output of the 6-V linear regulator supplied from VCC. The LDO is active when the voltage on the ACDET pin is above 0.6 V and voltage on VCC is above UVLO. Connect a 1-µF ceramic capacitor from REGN to GND.
SCL	9	SMBus open-drain clock input. Connect to the SMBus clock line from the host controller or smart battery. Connect a 10-kΩ pullup resistor according to SMBus specifications.
SDA	8	SMBus open-drain data I/O. Connect to the SMBus data line from the host controller or smart battery. Connect a 10-kΩ pullup resistor according to SMBus specifications.
SRN	12	Charge current-sense resistor negative input. The SRN pin is for battery voltage sensing as well. Connect SRN pin to a 7.5-Ω resistor first then from resistor another terminal connect a 0.1-µF ceramic capacitor to GND for common-mode filtering and connect to current-sensing resistor. Connect a 0.1-µF ceramic capacitor between current sensing resistor to provide differential-mode filtering. See *Application and Implementation* about negative output voltage protection for hard shorts on battery-to-ground or battery-reverse connection by adding small resistor.
SRP	13	Charge current-sense resistor positive input. Connect SRP pin to a 10-Ω resistor first, then, from resistor another terminal, connect to current-sensing resistor. Connect a 0.1-µF ceramic capacitor between current sensing resistor to provide differential-mode filtering. See *Application and Implementation* about negative output voltage protection for hard shorts on battery-to-ground or battery-reverse connection by adding small resistor.
VCC	20	Input supply, diode OR from adapter or battery voltage. Use 10-Ω resistor and 1-µF capacitor to ground as low pass filter to limit inrush current.

Copyright © 2010–2015, Texas Instruments Incorporated

7 Specifications

7.1 Absolute Maximum Ratings

over operating free-air temperature range (unless otherwise noted)(1)(2)

		MIN	MAX	UNIT
Voltage	SRN, SRP, ACN, ACP, VCC	–0.3	30	V
	PHASE	–2	30	
	ACDET, SDA, SCL, LODRV, REGN, IOUT, ILIM, $\overline{ACOK}$, $\overline{IFAULT}$, CMPIN, CMPOUT	–0.3	7	
	BTST, HIDRV	–0.3	36	
Maximum difference voltage	SRP–SRN, ACP–ACN	–0.5	0.5	
Junction temperature, T_J		–40	155	°C
Storage temperature, T_{stg}		–55	155	°C

(1) Stresses beyond those listed under *Absolute Maximum Ratings* may cause permanent damage to the device. These are stress ratings only, which do not imply functional operation of the device at these or any other conditions beyond those indicated under *Recommended Operating Conditions*. Exposure to absolute-maximum-rated conditions for extended periods may affect device reliability.
(2) All voltages are with respect to GND if not specified. Currents are positive into, negative out of the specified terminal. Consult Packaging Section of the data book for thermal limitations and considerations of packages.

7.2 ESD Ratings

			VALUE	UNIT
$V_{(ESD)}$	Electrostatic discharge	Human body model (HBM), per ANSI/ESDA/JEDEC JS-001(1)	±2000	V
		Charged device model (CDM), per JEDEC specification JESD22-C101(2)	±500	

(1) JEDEC document JEP155 states that 500-V HBM allows safe manufacturing with a standard ESD control process.
(2) JEDEC document JEP157 states that 250-V CDM allows safe manufacturing with a standard ESD control process.

7.3 Recommended Operating Conditions

over operating free-air temperature range (unless otherwise noted)

		MIN	NOM	MAX	UNIT
Voltage	SRN, SRP, ACN, ACP, VCC	0		24	V
	PHASE	–2		24	
	ACDET, SDA, SCL, LODRV, REGN, IOUT, ILIM, $\overline{ACOK}$, $\overline{IFAULT}$, CMPIN, CMPOUT	0		6.5	
	BTST, HIDRV	0		30	
Maximum difference voltage	SRP–SRN, ACP–ACN	–0.2		0.2	V
Junction temperature, T_J		0		125	°C

7.4 Thermal Information

THERMAL METRIC(1)		bq24707x RGR [VQFN] 20 PINS	UNIT
$R_{\theta JA}$	Junction-to-ambient thermal resistance	46.8	°C/W
$R_{\theta JC(top)}$	Junction-to-case (top) thermal resistance	56.9	°C/W
$R_{\theta JB}$	Junction-to-board thermal resistance	46.6	°C/W
ψ_{JT}	Junction-to-top characterization parameter	0.6	°C/W
ψ_{JB}	Junction-to-board characterization parameter	15.3	°C/W
$R_{\theta JC(bot)}$	Junction-to-case (bottom) thermal resistance	4.4	°C/W

(1) For more information about traditional and new thermal metrics, see the *Semiconductor and IC Package Thermal Metrics* application report, SPRA953.

Copyright © 2010–2015, Texas Instruments Incorporated

7.5 Electrical Characteristics

4.5 V ≤ $V_{(VCC)}$ ≤ 24 V, 0°C ≤ T_J ≤ 125°C, typical values are at T_A = 25°C, with respect to GND (unless otherwise noted)

PARAMETER		TEST CONDITIONS	MIN	TYP	MAX	UNIT
OPERATING CONDITIONS						
V_{VCC_OP}	VCC Input voltage operating		4.5		24	V
CHARGE VOLTAGE REGULATION						
$V_{BAT_REG_RNG}$	BAT voltage regulation		1.024		19.2	V
$V_{BAT_REG_ACC}$	Charge voltage regulation accuracy	ChargeVoltage() = 0x41A0H	16.716	16.8	16.884	V
			–0.5%		0.5%	
		ChargeVoltage() = 0x3130H	12.529	12.592	12.655	V
			–0.5%		0.5%	
		ChargeVoltage() = 0x20D0H	8.35	8.4	8.45	V
			–0.6%		0.6%	
		ChargeVoltage() = 0x1060H	4.163	4.192	4.221	V
			–0.7%		0.7%	
CHARGE CURRENT REGULATION						
$V_{IREG_CHG_RNG}$	Charge current regulation differential voltage	$V_{IREG_CHG} = V_{SRP} - V_{SRN}$	0		81.28	mV
$I_{CHRG_REG_ACC}$	Charge current regulation accuracy 10-mΩ current-sensing resistor	ChargeCurrent() = 0x1000H	3973	4096	4219	mA
			–3%		3%	
		ChargeCurrent() = 0x0800H	1946	2048	2150	mA
			–5%		5%	
		ChargeCurrent() = 0x0200H	410	512	614	mA
			–20%		20%	
		ChargeCurrent() = 0x0100H	172	256	340	mA
			–33%		33%	
		ChargeCurrent() = 0x0080H	64	128	192	mA
			–50%		50%	
INPUT CURRENT REGULATION						
$V_{IREG_DPM_RNG}$	Input current regulation differential voltage	$V_{IREG_DPM} = V_{ACP} – V_{ACN}$	0		80.64	mV
$I_{DPM_REG_ACC}$	Input current regulation accuracy 10-mΩ current-sensing resistor	InputCurrent() = 0x1000H	3973	4096	4219	mA
			–3%		3%	
		InputCurrent() = 0x0800H	1946	2048	2150	mA
			–5%		5%	
		InputCurrent() = 0x0400H	870	1024	1178	mA
			–15%		15%	
		InputCurrent() = 0x0200H	384	512	640	mA
			–25%		25%	
INPUT CURRENT OR CHARGE CURRENT-SENSE AMPLIFIER						
V_{ACP/N_OP}	Input common mode	Voltage on ACP/ACN	4.5		24	V
V_{SRP/N_OP}	Output common mode	Voltage on SRP/SRN	0		19.2	V
V_{IOUT}	IOUT output voltage		0		1.6	V
I_{IOUT}	IOUT output current		0		1	mA
A_{IOUT}	Current-sense amplifier gain	$V_{(ICOUT)}/V_{(SRP-SRN)}$ or $V_{(ACP-ACN)}$		20		V/V

Copyright © 2010–2015, Texas Instruments Incorporated

Electrical Characteristics (continued)

4.5 V ≤ $V_{(VCC)}$ ≤ 24 V, 0°C ≤ T_J ≤ 125°C, typical values are at T_A = 25°C, with respect to GND (unless otherwise noted)

PARAMETER		TEST CONDITIONS	MIN	TYP	MAX	UNIT
V_{IOUT_ACC}	Current-sense output accuracy	$V_{(SRP-SRN)}$ or $V_{(ACP-ACN)}$ = 40.96 mV	–2%		2%	
		$V_{(SRP-SRN)}$ or $V_{(ACP-ACN)}$ = 20.48 mV	–4%		4%	
		$V_{(SRP-SRN)}$ or $V_{(ACP-ACN)}$ = 10.24 mV	–15%		15%	
		$V_{(SRP-SRN)}$ or $V_{(ACP-ACN)}$ = 5.12 mV	–20%		20%	
		$V_{(SRP-SRN)}$ or $V_{(ACP-ACN)}$ = 2.56 mV	–33%		33%	
		$V_{(SRP-SRN)}$ or $V_{(ACP-ACN)}$ = 1.28 mV	–50%		50%	
C_{IOUT_MAX}	Maximum output load capacitance	For stability with 0- to 1-mA load			100	pF
REGN REGULATOR						
V_{REGN_REG}	REGN regulator voltage	V_{VCC} > 6.5 V, V_{ACDET} > 0. 6V (0-55 mA load)	5.5	6	6.5	V
I_{REGN_LIM}	REGN current limit	V_{REGN} = 0 V, V_{VCC} > UVLO charge enabled and not in TSHUT	65	80		mA
$I_{REGN_LIM_TSHUT}$		V_{REGN} = 0 V, V_{VCC} > UVLO charge disabled or in TSHUT	7	16		
C_{REGN}	REGN output capacitor required for stability	I_{LOAD} = 100 µA to 65 mA		1		µF
INPUT UNDERVOLTAGE LOCKOUT COMPARATOR (UVLO)						
V_{UVLO}	Input undervoltage rising threshold	V_{VCC} rising	3.5	3.75	4	V
V_{UVLO_HYS}	Input undervoltage falling hysteresis	V_{VCC} falling		340		mV
FAST DPM COMPARATOR (FAST_DPM)						
V_{FAST_DPM}	Fast DPM comparator stop charging rising threshold with respect to input current limit, voltage across input sense resistor rising edge (specified by design)			108%		
QUIESCENT CURRENT						
I_{BAT}	Total battery leakage current to I_{SRN} + I_{SRP} +I_{PHASE} + I_{VCC} + I_{ACP} + I_{ACN}	V_{VCC} < V_{BAT} = 16.8 V, T_J = 0 to 85°C			15	µA
$I_{STANDBY}$	Standby quiescent current, I_{VCC} + I_{ACP} + I_{ACN}	V_{VCC} > V_{UVLO}, V_{ACDET} > 0.6 V, charge disabled, T_J = 0 to 85°C		0.5	1	mA
I_{AC_NOSW}	Adapter bias current during charge, I_{VCC} + I_{ACP} + I_{ACN}	V_{VCC} > V_{UVLO}, V_{ACDET} > 2.4 V, charge enabled, no switching, T_J = 0 to 85°C		1.5	3	mA
I_{AC_SW}	Adapter bias current during charge, I_{VCC} + I_{ACP} + I_{ACN}	V_{VCC} > V_{UVLO}, V_{ACDET} > 2.4 V, charge enabled, switching, MOSFET Sis412DN		10		mA
ACOK COMPARATOR						
V_{ACOK_FALL}	$\overline{ACOK}$ falling threshold	V_{VCC}>V_{UVLO}, V_{ACDET} rising	2.376	2.4	2.424	V
$V_{ACOK_RISE_HYS}$	$\overline{ACOK}$ rising hysteresis	V_{VCC}>V_{UVLO}, V_{ACDET} falling	35	55	75	mV
V_{WAKEUP_RISE}	WAKEUP detect rising threshold	V_{VCC}>V_{UVLO}, V_{ACDET} rising		0.57	0.8	V
V_{WAKEUP_FALL}	WAKEUP detect falling threshold	V_{VCC}>V_{UVLO}, V_{ACDET} falling	0.3	0.51		V
VCC to SRN COMPARATOR (VCC_SRN)						
$V_{VCC\text{-}SRN_FALL}$	VCC-SRN falling threshold	V_{VCC} falling towards V_{SRN}	70	125	180	mV
$V_{VCC\text{-}SRN\ _RHYS}$	VCC-SRN rising hysteresis	V_{VCC} rising above V_{SRN}	70	120	170	mV

Copyright © 2010–2015, Texas Instruments Incorporated

Electrical Characteristics (continued)

4.5 V ≤ $V_{(VCC)}$ ≤ 24 V, 0°C ≤ T_J ≤ 125°C, typical values are at T_A = 25°C, with respect to GND (unless otherwise noted)

PARAMETER		TEST CONDITIONS	MIN	TYP	MAX	UNIT
HIGH-SIDE IFAULT COMPARATOR (IFAULT_HI)(1)						
$V_{IFAULT_HI_RISE}$	ACP to PHASE rising threshold	ChargeOption() bit [8:7] = 00	200	300	450	mV
		ChargeOption() bit [8:7] = 01	330	500	700	
		ChargeOption() bit [8:7] = 10 (default)	450	700	1000	
		ChargeOption() bit [8:7] = 11	600	900	1250	
LOW-SIDE IFAULT COMPARATOR (IFAULT_LOW)						
$V_{IFAULT_LOW_RISE}$	PHASE to GND rising threshold		40	110	160	mV
INPUT OVERCURRENT COMPARATOR (ACOC)(1)						
V_{ACOC}	Adapter overcurrent rising threshold with respect to input current limit, voltage across input sense resistor rising edge	ChargeOption() bit [2:1] = 01	120%	133%	145%	
		ChargeOption() bit [2:1] = 10 (default)	150%	166%	180%	
		ChargeOption() bit [2:1] = 11	200%	222%	240%	
V_{ACOC_min}	Min ACOC threshold clamp voltage	ChargeOption() bit [2:1] = 01 (133%), InputCurrent() = 0x0400H (10.24mV)	40	45	50	mV
V_{ACOC_max}	Max ACOC threshold clamp voltage	ChargeOption() bit [2:1] = 11 (222%), InputCurrent() = 0x1F80H (80.64mV)	140	150	160	mV
t_{ACOC_DEG}	ACOC deglitch time (specified by design)	Voltage across input sense resistor rising to disable charge	1.7	2.5	3.3	ms
BAT OVERVOLTAGE COMPARATOR (BAT_OVP)						
V_{OVP_RISE}	Overvoltage rising threshold as percentage of V_{BAT_REG}	V_{SRN} rising	103%	104%	106%	
V_{OVP_FALL}	Overvoltage falling threshold as percentage of V_{BAT_REG}	V_{SRN} falling		102%		
CHARGE OVERCURRENT COMPARATOR (CHG_OCP)						
V_{OCP_RISE}	Charge overcurrent rising threshold, measure voltage drop across current-sensing resistor	ChargeCurrent() = 0x0xxxH	54	60	66	mV
		ChargeCurrent() = 0x1000H – 0x17C0H	80	90	100	mV
		ChargeCurrent() = 0x1800 H– 0x1FC0H	110	120	130	mV
CHARGE UNDERCURRENT COMPARATOR (CHG_UCP)						
V_{UCP_FALL}	Charge undercurrent falling threshold	V_{SRP} falling towards V_{SRN}	1	5	9	mV
LIGHT LOAD COMPARATOR (LIGHT_LOAD)						
V_{LL_FALL}	Light load falling threshold	Measure voltage drop across current-sensing resistor		1.25		mV
$V_{LL_RISE_HYST}$	Light load rising hysteresis	Measure voltage drop across current-sensing resistor		1.25		mV
BATTERY LOWV COMPARATOR (BAT_LOWV)						
V_{BATLV_FALL}	Battery LOWV falling threshold	V_{SRN} falling	2.4	2.5	2.6	V
V_{BATLV_RHYST}	Battery LOWV rising hysteresis	V_{SRN} rising		200		mV
I_{BATLV}	Battery LOWV charge current limit	10-mΩ current sensing resistor		0.5		A
THERMAL SHUTDOWN COMPARATOR (TSHUT)						
T_{SHUT}	Thermal shutdown rising temperature	Temperature rising		155		°C
T_{SHUT_HYS}	Thermal shutdown hysteresis, falling	Temperature falling		20		°C

(1) User can adjust threshold through SMBus ChargeOption() REG0x12.

Copyright © 2010–2015, Texas Instruments Incorporated

Electrical Characteristics (continued)

4.5 V ≤ $V_{(VCC)}$ ≤ 24 V, 0°C ≤ T_J ≤ 125°C, typical values are at T_A = 25°C, with respect to GND (unless otherwise noted)

PARAMETER		TEST CONDITIONS	MIN	TYP	MAX	UNIT
ILIM COMPARATOR						
V_{ILIM_FALL}	ILIM as CE falling threshold	V_{ILIM} falling	60	75	90	mV
V_{ILIM_RISE}	ILIM as CE rising threshold	V_{ILIM} rising	90	105	120	mV
LOGIC INPUT (SDA, SCL)						
V_{IN_LO}	Input low threshold				0.8	V
V_{IN_HI}	Input high threshold		2.1			V
I_{IN_LEAK}	Input bias current	V = 7 V	–1		1	µA
LOGIC OUTPUT OPEN DRAIN ($\overline{ACOK}$, SDA, $\overline{IFAULT}$, CMPOUT)						
V_{OUT_LO}	Output saturation voltage	5-mA drain current			500	mV
I_{OUT_LEAK}	Leakage current	V = 7 V	–1		1	µA
ANALOG INPUT (ACDET, ILIM)						
I_{IN_LEAK}	Input bias current	V = 7 V	–1		1	µA
ANALOG INPUT (CMPIN has 50-kΩ series resistor and 2000-kΩ pulldown resistor)						
I_{IN_LEAK}	Input bias current	V = 7 V	1	3.5	7	µA
PWM OSCILLATOR						
F_{SW}	PWM switching frequency	ChargeOption() bit [9] = 0 (default)	600	750	900	kHz
F_{SW+}	PWM increase frequency	ChargeOption() bit [10:9] = 11	665	885	1100	kHz
$F_{SW–}$	PWM decrease frequency	ChargeOption() bit [10:9] = 01	465	615	765	kHz
PWM HIGH-SIDE DRIVER (HIDRV)						
$R_{DS_HI_ON}$	High-side driver (HSD) turnon resistance	V_{BTST} – V_{PH} = 5.5 V, I = 10mA		12	20	Ω
$R_{DS_HI_OFF}$	High-side driver turnoff resistance	V_{BTST} – V_{PH} = 5.5 V, I = 10mA		0.65	1.3	Ω
$V_{BTST_REFRESH}$	Bootstrap refresh comparator threshold voltage	V_{BTST} – V_{PH} when low-side refresh pulse is requested	3.85	4.3	4.7	V
PWM LOW-SIDE DRIVER (LODRV)						
$R_{DS_LO_ON}$	Low side driver (LSD) turnon resistance	V_{REGN} = 6 V, I = 10 mA		15	25	Ω
$R_{DS_LO_OFF}$	Low side driver turnoff resistance	V_{REGN} = 6 V, I = 10 mA		0.9	1.4	Ω
INTERNAL SOFT-START						
I_{STEP}	Soft-start step size	In CCM mode, 10-mΩ current-sense resistor		64		mA
INDEPENDENT COMPARATOR (1)						
V_{IC_REF1}	Comparator reference	ChargeOption() bit [4] = 0, rising edge (default)	0.585	0.6	0.615	V
V_{IC_REF2}	Comparator reference	ChargeOption() bit [4] = 1, rising edge	2.375	2.4	2.425	V
R_S	Series resistor			50		kΩ
R_{DOWN}	Pulldown resistor			2000		kΩ

Copyright © 2010–2015, Texas Instruments Incorporated

7.6 Timing Requirements

			MIN	NOM	MAX	UNIT
ACOK COMPARATOR						
$t_{ACOK_FALL_DEG}$	$\overline{ACOK}$ falling deglitch (specified by design)	V_{VCC}>V_{UVLO}, V_{ACDET} rising above 2.4 V, ChargeOption() bit [15] = 0 (default), (bq24707 only)	0.9	1.3	1.7	s
		V_{VCC}>V_{UVLO}, V_{ACDET} rising above 2.4 V, ChargeOption() bit [15] = 0 (default), (bq24707A only)	0.8	1.2	2	ms
		V_{VCC}>V_{UVLO}, V_{ACDET} rising above 2.4 V, ChargeOption() bit [15] = 1		10	50	µs
PWM DRIVER						
t_{LOW_HIGH}	Driver dead time from low side to high side			20		ns
t_{HIGH_LOW}	Driver dead time from high side to low side			20		ns
INTERNAL SOFT-START						
t_{STEP}	Soft-start step time	In CCM mode, 10-mΩ current-sense resistor		240		µs
SMBus						
t_R	SCLK/SDATA rise time				1	µs
t_F	SCLK/SDATA fall time				300	ns
$t_{W(H)}$	SCLK pulse width high		4		50	µs
$t_{W(L)}$	SCLK pulse width low		4.7			µs
$t_{SU(STA)}$	Setup time for START condition		4.7			µs
$t_{H(STA)}$	START condition hold time after which first clock pulse is generated		4			µs
$t_{SU(DAT)}$	Data setup time		250			ns
$t_{H(DAT)}$	Data hold time		300			ns
$t_{SU(STOP)}$	Setup time for STOP condition		4			µs
$t_{(BUF)}$	Bus free time between START and STOP condition		4.7			µs
$F_{S(CL)}$	Clock frequency		10		100	kHz
HOST COMMUNICATION FAILURE						
$t_{timeout}$	SMBus bus release time-out (1)		25		35	ms
t_{BOOT}	Deglitch for watchdog reset signal		10			ms
t_{WDI}	Watchdog time-out period, ChargeOption() bit [14:13] = 01 (2)		35	44	53	s
t_{WDI}	Watchdog time-out period, ChargeOption() bit [14:13] = 10 (2)		70	88	105	s
t_{WDI}	Watchdog time-out period, ChargeOption() bit [14:13] = 11 (2) (default)		140	175	210	s

(1) Devices participating in a transfer time-out when any clock low exceeds the 25-ms minimum time-out period. Devices that have detected a time-out condition must reset the communication no later than the 35-ms maximum time-out period. Both a master and a slave must adhere to the maximum value specified as it incorporates the cumulative stretch limit for both a master (10 ms) and a slave (25 ms).
(2) User can adjust threshold through SMBus ChargeOption() REG0x12.

Copyright © 2010–2015, Texas Instruments Incorporated

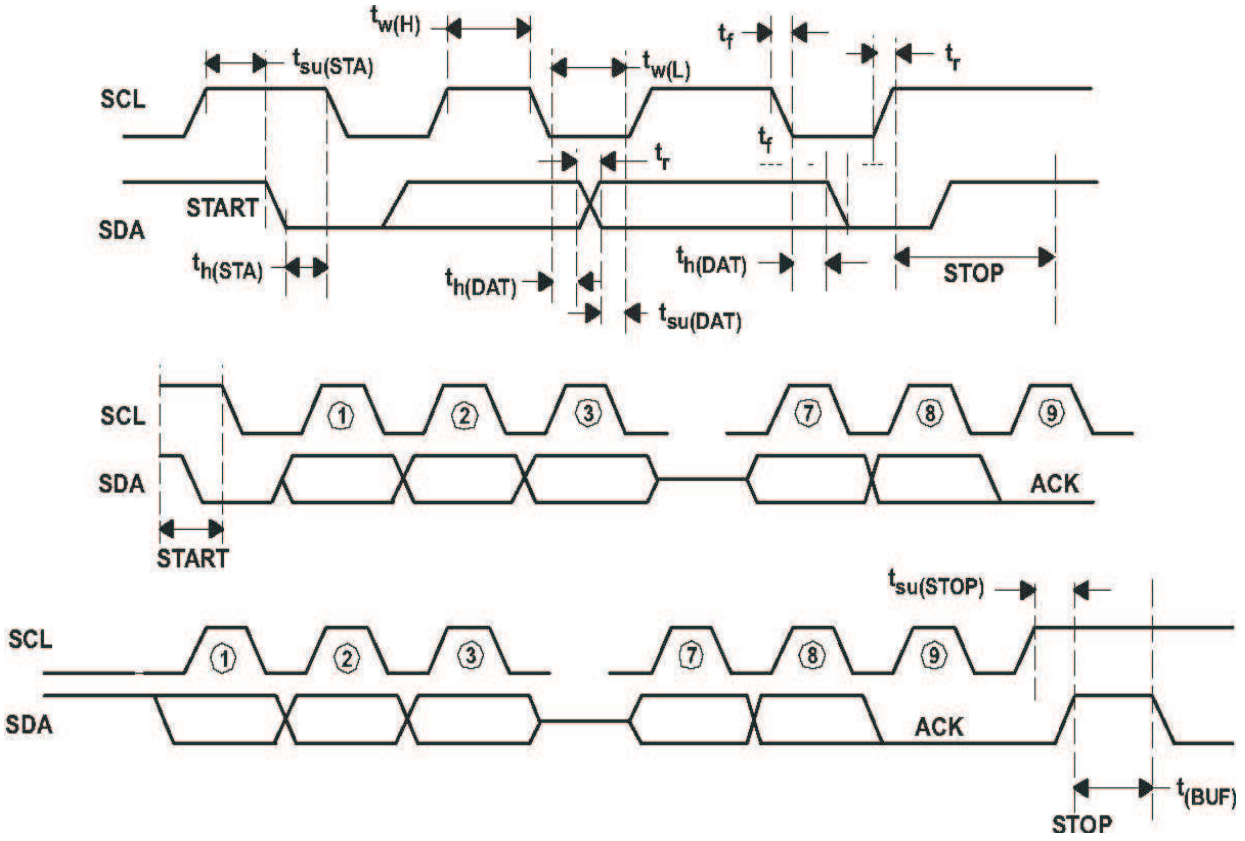

Figure 1. SMBus Communication Timing Waveforms

7.7 Typical Characteristics

Table 1. Table of Graphs

	FIGURE
VCC, ACDET, REGN and $\overline{\text{ACOK}}$ Power Up (bq24707)	Figure 2
Charge Enable by ILIM	Figure 3
Current Soft-Start	Figure 4
Charge Disable by ILIM	Figure 5
Continuous Conduction Mode Switching Waveforms	Figure 6
Cycle-by-Cycle Synchronous to Nonsynchronous	Figure 7
100% Duty and Refresh Pulse	Figure 8
System Load Transient (Input DPM)	Figure 9
Battery Insertion	Figure 18
Battery-to-Ground Short Protection	Figure 10
Battery-to-Ground Short Transition	Figure 11
Efficiency vs Output Current	Figure 19

Copyright © 2010–2015, Texas Instruments Incorporated

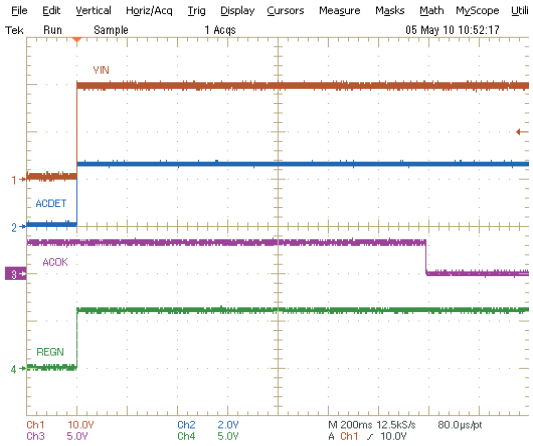

CH1: VCC, 10 V/div; CH2: ACDET, 2 V/div; CH3: $\overline{\text{ACOK}}$, 5 V/div; CH4: REGN, 5 V/div, 200 ms/div

Figure 2. VCC, ACDET, REGN and $\overline{\text{ACOK}}$ Power Up (bq24707)

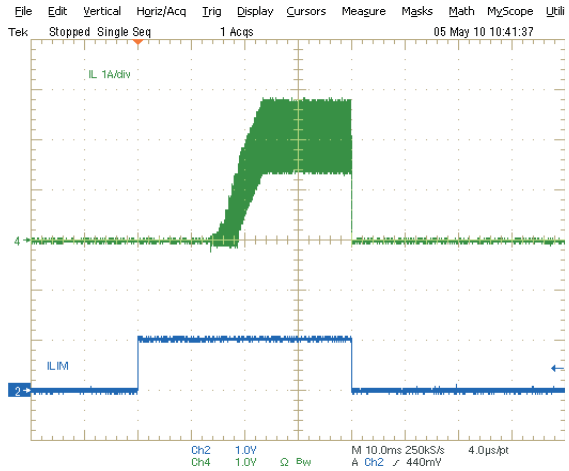

CH2: ILIM, 1 V/div; CH4: inductor current, 1 A/div, 10 ms/div

Figure 3. Charge Enable by ILIM

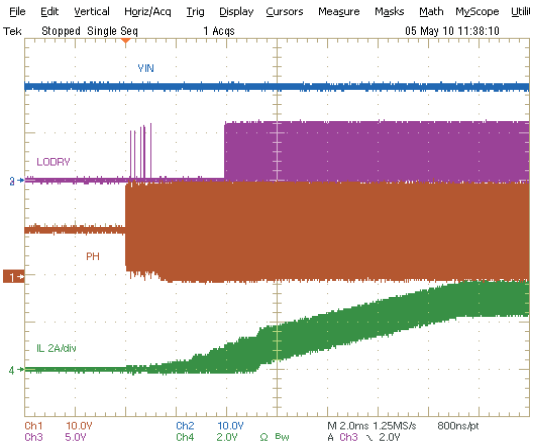

CH1: PHASE, 10 V/div; CH2: Vin, 10 V/div; CH3: LODRV, 5 V/div; CH4: inductor current, 2 A/div, 2 ms/div

Figure 4. Current Soft-Start

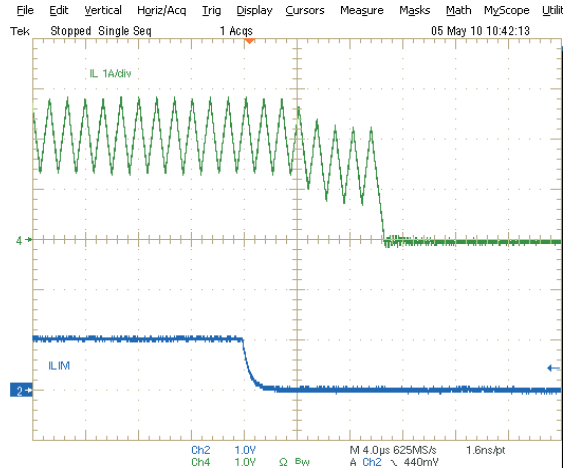

CH2: ILIM, 1 V/div; CH4: inductor current, 1 A/div, 4 µs/div

Figure 5. Charge Disable by ILIM

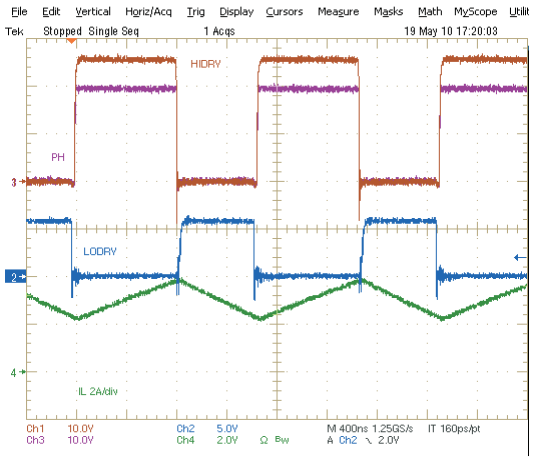

CH1: HIDRV, 10 V/div; CH2: LODRV, 5 V/div; CH3: PHASE, 10 V/div; CH4: inductor current, 2 A/div, 400 ns/div

Figure 6. Continuous Conduction Mode Switching Waveforms

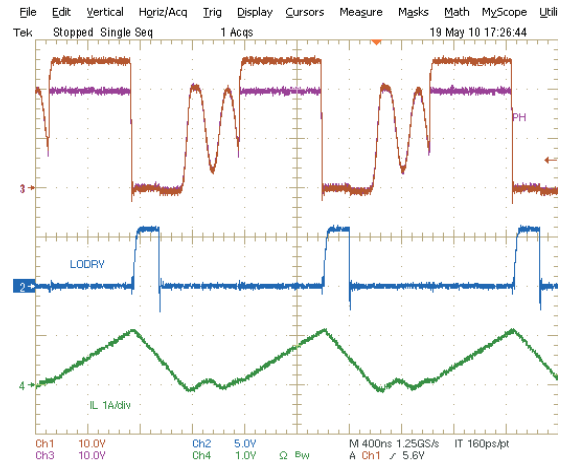

CH1: HIDRV, 10 V/div; CH2: LODRV, 5 V/div; CH3: PHASE, 10 V/div; CH4: inductor current, 1 A/div, 400 ns/div

Figure 7. Cycle-by-Cycle Synchronous to Nonsynchronous

Copyright © 2010–2015, Texas Instruments Incorporated

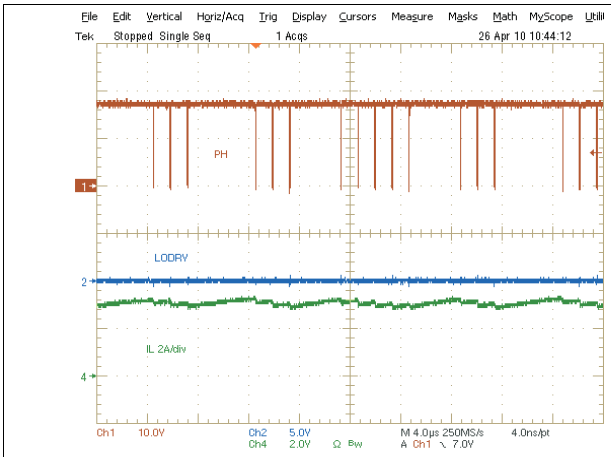

CH1: PHASE, 10 V/div; CH2: LODRV, 5 V/div; CH4: inductor current, 2 A/div, 4 µs/div

Figure 8. 100% Duty and Refresh Pulse

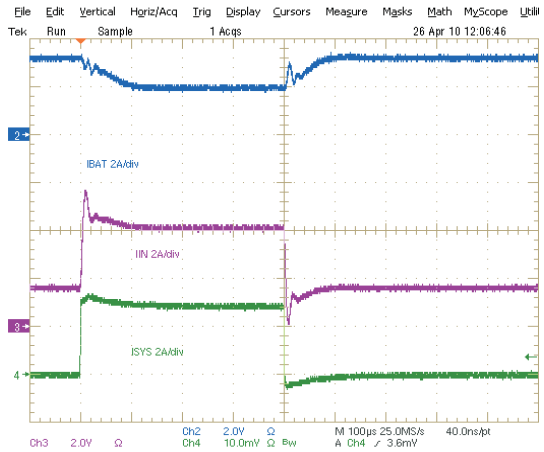

CH2: battery current, 2 A/div; CH3: adapter current, 2 A/div; CH4: system load current, 2 A/div, 100 µs/div

Figure 9. System Load Transient (Input DPM)

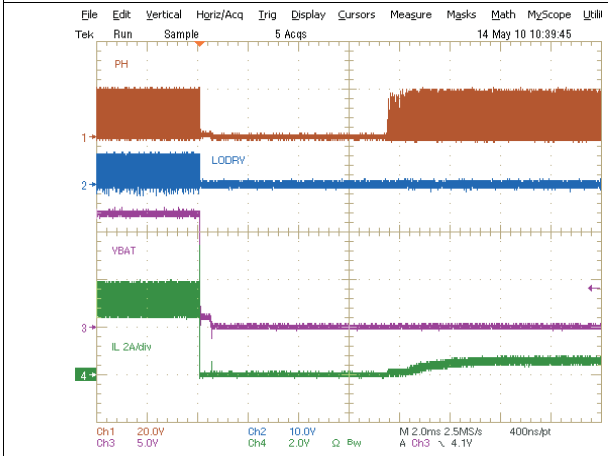

CH1: PHASE, 20 V/div; CH2: LODRV, 10 V/div; CH3: battery voltage, 5 V/div; CH4: inductor current, 2 A/div, 2 ms/div

Figure 10. Battery-to-Ground Short Protection

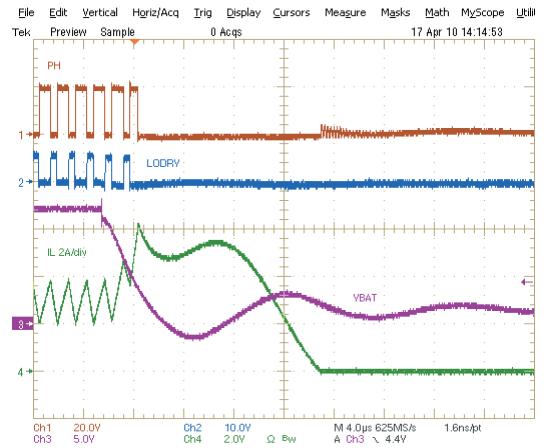

CH1: PHASE, 20 V/div; CH2: LODRV, 10 V/div; CH3: battery voltage, 5 V/div; CH4: inductor current, 2 A/div, 4 µs/div

Figure 11. Battery-to-Ground Short Transition

Copyright © 2010–2015, Texas Instruments Incorporated

8 Detailed Description

8.1 Overview

The bq24707x device is a 1- to 4-cell battery charge controller with power selection for space-constrained, multi-chemistry portable applications such as notebooks and detachable ultrabooks. The device supports a wide input range of input sources from 4.5 V to 24 V, and a 1- to 4-cell battery for a versatile solution.

The bq24707x features Dynamic Power Management (DPM) to limit the input power and avoid AC adapter overloading. During battery charging, as the system power increases, the charging current will reduce to maintain total input current below adapter rating.

The SMBus controls input current, charge current and charge voltage registers with high-resolution, high-accuracy regulation limits.

Copyright © 2010–2015, Texas Instruments Incorporated

8.2 Functional Block Diagram

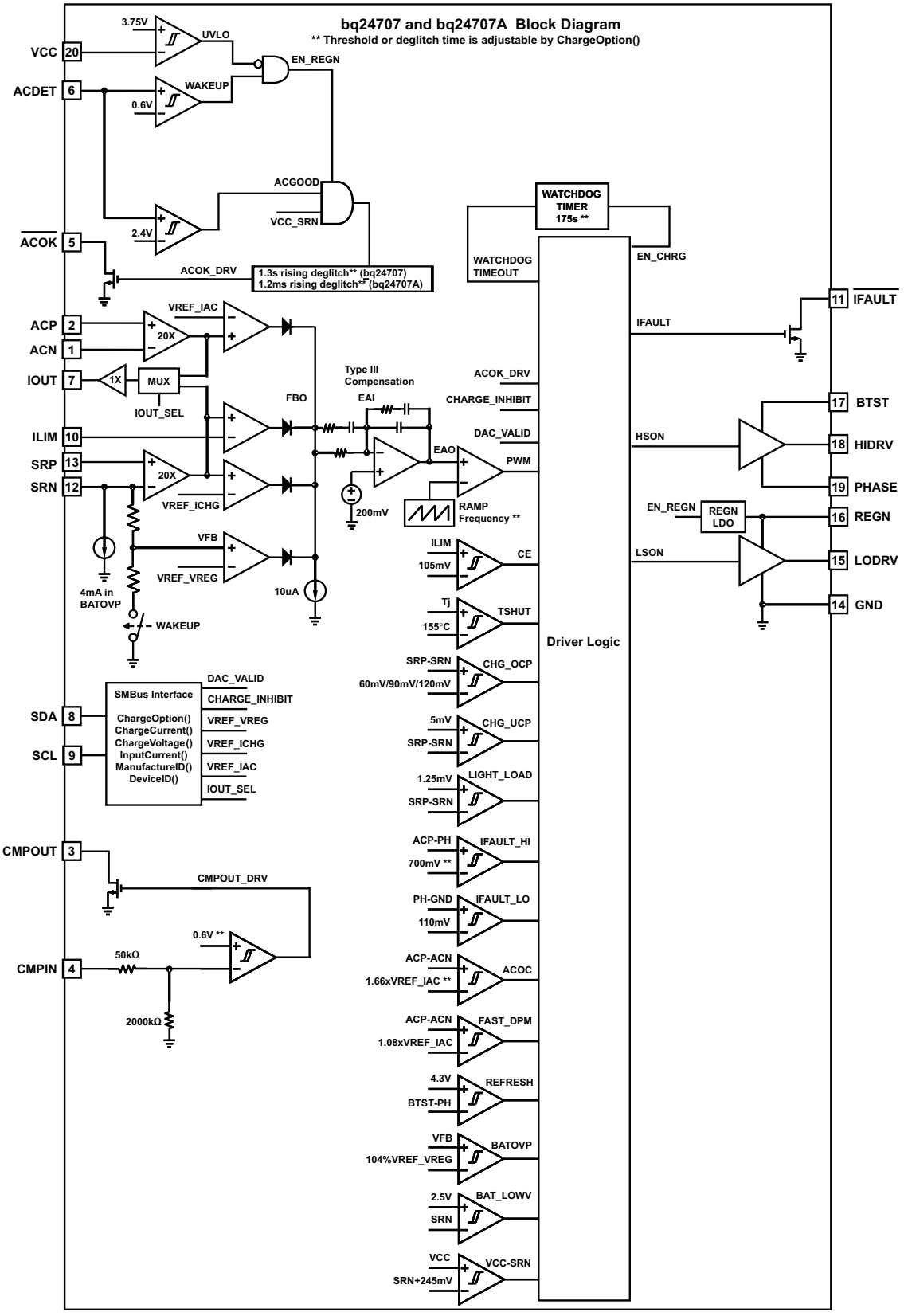

8.3 Feature Description

8.3.1 Automatic Internal Soft-Start Charger Current

Every time charge is enabled, the charger automatically applies soft-start on charge current to avoid any overshoot or stress on the output capacitors or the power converter. The charge current starts at 128 mA, and the step size is 64 mA in CCM mode for a 10-mΩ current sensing resistor. Each step lasts around 240 µs in CCM mode, until it reaches the programmed charge current limit. No external components are needed for this function. During DCM mode, the soft-start current step size is larger and each step lasts for a longer time period due to the intrinsic slow response of DCM mode.

8.3.2 High-Accuracy Current-Sense Amplifier

As an industry standard, a high-accuracy current-sense amplifier (CSA) is used to monitor the input current or the charge current, selectable through SMBus (ChargeOption() bit[5] = 0 selects the input current, bit[5] = 1 selects the charge current) by the host. The CSA senses voltage across the sense resistor by a factor of 20 through the IOUT pin. Once VCC is above UVLO and ACDET is above 0.6 V, CSA turns on and the IOUT output becomes valid. To lower the voltage on current monitoring, a resistor divider from IOUT to GND can be used and accuracy over temperature can still be achieved.

A 100-pF capacitor connected on the output is recommended for decoupling high-frequency noise. An additional RC filter is optional, if additional filtering is desired. Adding filtering also adds additional response delay.

8.3.3 Charge Timeout

The IC includes a watchdog timer to terminate charging if the charger does not receive a write ChargeVoltage() or write ChargeCurrent() command within 175 s (adjustable through ChargeOption() command). If a watchdog timeout occurs, all register values stay unchanged, but charge is suspended. Write ChargeVoltage() or write ChargeCurrent() commands must be re-sent to reset the watchdog timer and resume charging. The watchdog timer can be disabled, or set to 44 s, 88 s, or 175 s through a SMBus command (ChargeOption() bit[14:13]). After watchdog timeout, write ChargeOption() bit[14:13] to disable the watchdog timer and also resume charging.

8.3.4 Input Overcurrent Protection (ACOC)

The IC cannot maintain the input current level if the charge current has been already reduced to zero. After the system current continues increasing to the 1.66× of input current DAC set point (with 2.5-ms blankout time), $\overline{\text{IFAULT}}$ is pulled to low and the charge is disabled for 1.3 s and will soft start again for charge if ACOC condition goes away. If such failure is detected seven times in 90 seconds, charge will be latched off and an adapter removal and system shutdown (make ACDET < 0.6 mV to reset IC) is required to start charge again. After 90 seconds, the failure counter will be reset to zero to prevent latch off.

The ACOC function can be disabled or the threshold can be set to 1.33×, 1.66× or 2.22× of input DPM current through SMBus command (ChargeOption() bit [2:1]).

8.3.5 Charge Overcurrent Protection (CHGOCP)

The IC has a cycle-by-cycle peak overcurrent protection. It monitors the voltage across SRP and SRN, and prevents the current from exceeding of the threshold based on the DAC charge current set point. The high-side gate drive turns off for the rest of the cycle when the overcurrent is detected, and resumes when the next cycle starts.

The charge OCP threshold is automatically set to 6 A, 9 A, and 12 A on a 10-mΩ current-sensing resistor based on charge current register value. This prevents the threshold to be too high which is not safe or too low which can be triggered in normal operation. Proper inductance should be selected to prevent OCP triggered in normal operation due to high inductor current ripple.

8.3.6 Battery Overvoltage Protection (BATOVP)

The IC will not allow the high-side and low-side FET to turn-on when the battery voltage at SRN exceeds 104% of the regulation voltage set-point. If BATOVP last over 30 ms, charger is completely disabled. This allows quick response to an overvoltage condition – such as occurs when the load is removed or the battery is disconnected. A 4-mA current sink from SRN to GND is on only during BATOVP and allows discharging the stored output inductor energy that is transferred to the output capacitors.

Copyright © 2010–2015, Texas Instruments Incorporated

Feature Description (continued)

Some battery pack gas gauges will set the ChargeVoltage() and ChargeCurrent() registers to 0 V and 0 A after the battery pack is fully charged. If the ChargeVoltage() register is set to 0 V, the bq24707 triggers BATOVP, and the 4-mA current discharges the battery pack. The recommendation for bq24707 is to set the ChargeVoltage() register to full scale charge voltage (12.592 V for 3-S battery for example) after the battery is fully charged. The bq24707A will not trigger BATOVP, and there is no 4-mA current to discharge the battery pack if the ChargeVoltage() register is set 0 V. The recommendation for bq24707A is to set the ChargeVoltage() register to 0 V after the battery is fully charged.

8.3.7 Battery Shorted to Ground (BATLOWV)

The IC will disable charge for 1 ms if the battery voltage on SRN falls below 2.5 V. After 1-ms reset, the charge is resumed with soft-start if all the enable conditions in the *Enable and Disable Charging* sections are satisfied. This prevents any overshoot current in inductor which can saturate inductor and may damage the MOSFET. The charge current is limited to 0.5 A on 10-mΩ current sensing resistor when BATLOWV condition persists and LSFET keeps off. The LSFET turns on only for refreshing pulse to charge BTST capacitor.

8.3.8 Thermal Shutdown Protection (TSHUT)

The QFN package has low thermal impedance, which provides good thermal conduction from the silicon to the ambient, to keep junctions temperatures low. As added level of protection, the charger converter turns off for self-protection whenever the junction temperature exceeds the 155°C. The charger stays off until the junction temperature falls below 135°C. During thermal shutdown, the REGN LDO current limit is reduced to 16 mA. Once the temperature falls below 135°C, charge can be resumed with soft-start.

8.4 Device Functional Modes

8.4.1 Enable and Disable Charging

In Charge mode, the following conditions have to be valid to start charge:

- Charge is enabled through SMBus (ChargeOption() bit [0] = 0, default is 0, charge enabled).
- ILIM pin voltage higher than 105 mV.
- All three regulation limit DACs have a valid value programmed.
- $\overline{\text{ACOK}}$ is valid (see *Adapter Detect and $\overline{\text{ACOK}}$ Output* for details).
- V_{SRN} does not exceed BATOVP threshold.
- IC temperature does not exceed TSHUT threshold.
- Not in ACOC condition (see *Input Overcurrent Protection (ACOC)* for details).

One of the following conditions stops ongoing charging:

- Charge is inhibited through SMBus (ChargeOption() bit[0] = 1).
- ILIM pin voltage lower than 75 mV.
- One of three regulation limit DACs is set to 0 or out of range.
- $\overline{\text{ACOK}}$ is pulled high (see *Adapter Detect and $\overline{\text{ACOK}}$ Output* for details).
- V_{SRN} exceeds BATOVP threshold.
- TSHUT IC temperature threshold is reached.
- ACOC is detected (see *Input Overcurrent Protection (ACOC)* for details).
- Short-circuit is detected (see *Inductor Short, MOSFET Short Protection* for details).
- Watchdog timer expires if watchdog timer is enabled (see *Charge Timeout* for details).

8.4.2 Continuous Conduction Mode (CCM)

With sufficient charge current the IC inductor current never crosses zero, which is defined as continuous conduction mode. The controller starts a new cycle with ramp coming up from 200 mV. As long as EAO voltage is above the ramp voltage, the high-side MOSFET (HSFET) stays on. When the ramp voltage exceeds EAO voltage, the HSFET turns off and the low-side MOSFET (LSFET) turns on. At the end of the cycle, the ramp gets reset and the LSFET turns off, ready for the next cycle. There is always break-before-make logic during the transition to prevent cross-conduction and shoot-through. During the dead time when both MOSFETs are off, the body-diode of the low-side power MOSFET conducts the inductor current.

Copyright © 2010–2015, Texas Instruments Incorporated

Device Functional Modes (continued)

During CCM mode, the inductor current is always flowing and creates a fixed two-pole system. Having the LSFET turn on keeps the power dissipation low and allows safely charging at high currents.

8.4.3 Discontinuous Conduction Mode (DCM)

During the HSFET off time when LSFET is on, the inductor current decreases. If the current goes to zero, the converter enters Discontinuous Conduction Mode. Every cycle, when the voltage across SRP and SRN falls below 5 mV (0.5 A on 10 mΩ), the undercurrent protection comparator (UCP) turns off LSFET to avoid negative inductor current, which may boost the system through the body diode of HSFET.

During the DCM mode the loop response automatically changes. It changes to a single pole system and the pole is proportional to the load current.

Both CCM and DCM are synchronous operation with LSFET turnon every clock cycle. If the average charge current goes below 125 mA on a 10-mΩ current-sensing resistor or the battery voltage falls below 2.5 V, the LSFET keeps turnoff. The battery charger operates in nonsynchronous mode and the current flows through the LSFET body diode. During nonsynchronous operation, the LSFET turns on only for refreshing pulse to charge BTST capacitor. If the average charge current goes above 250 mA on a 10-mΩ current sensing resistor, the LSFET exits nonsynchronous mode and enters synchronous mode to reduce LSFET power loss.

8.5 Programming

8.5.1 SMBus Interface

The IC operates as a slave, receiving control inputs from the embedded controller host through the SMBus interface. The IC uses a simplified subset of the commands documented in System Management Bus Specification V1.1, which can be downloaded from www.smbus.org. The IC uses the SMBus Read-Word and Write-Word protocols (see Figure 12) to communicate with the smart battery. The IC performs only as a SMBus slave device with address 0b00010010 (0x12H) and does not initiate communication on the bus. In addition, the IC has two identification registers a 16-bit device ID register (0xFFH) and a 16-bit manufacturer ID register (0xFEH).

SMBus communication is enabled with the following conditions:

- V_{VCC} is above UVLO.
- V_{ACDET} is above 0.6 V.

The data (SDA) and clock (SCL) pins have Schmitt-trigger inputs that can accommodate slow edges. Choose pullup resistors (10 kΩ) for SDA and SCL to achieve rise times according to the SMBus specifications. Communication starts when the master signals a START condition, which is a high-to-low transition on SDA, while SCL is high. When the master has finished communicating, the master issues a STOP condition, which is a low-to-high transition on SDA, while SCL is high. The bus is then free for another transmission. Figure 13 and Figure 14 show the timing diagrams for signals on the SMBus interface. The address byte, command byte, and data bytes are transmitted between the START and STOP conditions. The SDA state changes only while SCL is low, except for the START and STOP conditions. Data is transmitted in 8-bit bytes and is sampled on the rising edge of SCL. Nine clock cycles are required to transfer each byte in or out of the IC because either the master or the slave acknowledges the receipt of the correct byte during the ninth clock cycle. The IC supports the charger commands as described in Table 2.

Copyright © 2010–2015, Texas Instruments Incorporated

Programming (continued)

a) Write-Word Format

S	SLAVE ADDRESS	W	ACK	COMMAND BYTE	ACK	LOW DATA BYTE	ACK	HIGH DATA BYTE	ACK	P
	7 BITS	1b	1b	8 BITS	1b	8 BITS	1b	8 BITS	1b	
	MSB LSB	0	0	MSB LSB	0	MSB LSB	0	MSB LSB	0	

Preset to 0b0001001 **ChargeCurrent() = 0x14H D7 D0 D15 D8**
ChargeVoltage() = 0x15H
InputCurrent() = 0x3FH
ChargeOption() = 0x12H

b) Read-Word Format

S	SLAVE ADDRESS	W	ACK	COMMAND BYTE	ACK	S	SLAVE ADDRESS	R	ACK	LOW DATA BYTE	ACK	HIGH DATA BYTE	NACK	P
	7 BITS	1b	1b	8 BITS	1b		7 BITS	1b	1b	8 BITS	1b	8 BITS	1b	
	MSB LSB	0	0	MSB LSB	0		MSB LSB	1	0	MSB LSB	0	MSB LSB	1	

Preset to 0b0001001 **DeviceID() = 0xFFH** **Preset to 0b0001001** **D7 D0** **D15 D8**
ManufactureID() = 0xFEH
ChargeCurrent() = 0x14H
ChargeVoltage() = 0x15H
InputCurrent() = 0x3FH
ChargeOption() = 0x12H

LEGEND:
S = START CONDITION OR REPEATED START CONDITION
P = STOP CONDITION
ACK = ACKNOWLEDGE (LOGIC-LOW)
NACK = NOT ACKNOWLEDGE (LOGIC-HIGH)
W = WRITE BIT (LOGIC-LOW)
R = READ BIT (LOGIC-HIGH)

MASTER TO SLAVE
SLAVE TO MASTER

Figure 12. SMBus Write-Word and Read-Word Protocols

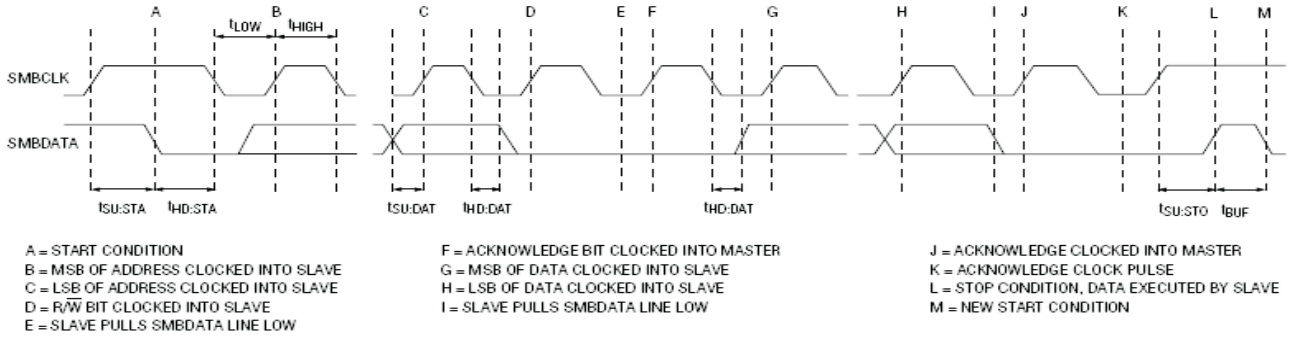

Figure 13. SMBus Write Timing

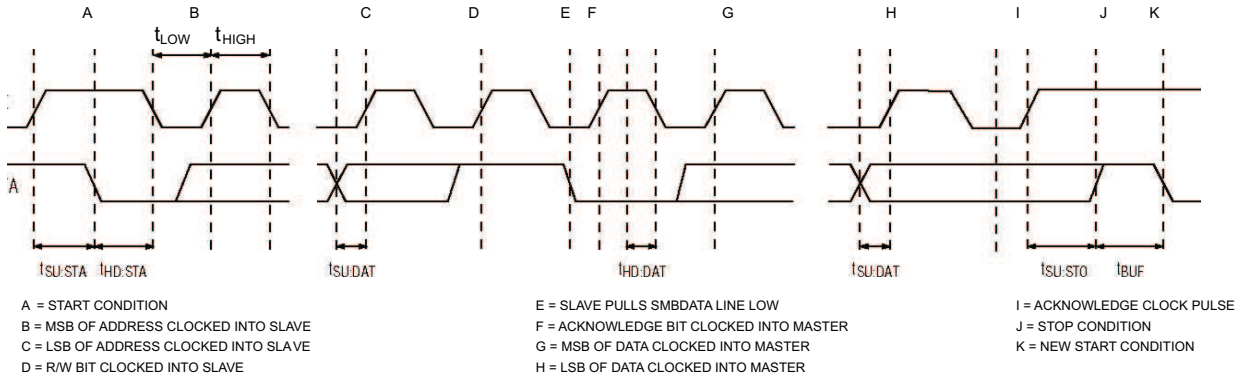

Figure 14. SMBus Read Timing

Programming (continued)

8.5.2 Battery-Charger Commands

The IC supports six battery-charger commands that use either Write-Word or Read-Word protocols, as summarized in Table 2. ManufacturerID() and DeviceID() can be used to identify the IC. The ManufacturerID() command always returns 0x0040H and the DeviceID() command always returns 0x000AH.

Table 2. Battery Charger Command Summary

REGISTER ADDRESS	REGISTER NAME	READ/WRITE	DESCRIPTION	POR STATE
0x12H	ChargeOption()	Read or Write	Charger Options Control	0x7904H
0x14H	ChargeCurrent()	Read or Write	7-Bit Charge Current Setting	0x0000H
0x15H	ChargeVoltage()	Read or Write	11-Bit Charge Voltage Setting	0x0000H
0x3FH	InputCurrent()	Read or Write	6-Bit Input Current Setting	0x1000H
0XFEH	ManufacturerID()	Read Only	Manufacturer ID	0x0040H
0xFFH	DeviceID()	Read Only	Device ID	0x000AH

8.5.3 Setting Charger Options

By writing ChargeOption() command (0x12H or 0b00010010), the IC allows users to change several charger options after POR (Power On Reset) as shown in Table 3.

Table 3. Charge Options Register (0x12h)

BIT	BIT NAME	DESCRIPTION
[15]	$\overline{\text{ACOK}}$ Deglitch Time Adjust	Adjust $\overline{\text{ACOK}}$ deglitch time. 0: $\overline{\text{ACOK}}$ deglitch time 1.3 s for bq24707, 1.2 ms for bq24707A <default at POR> 1: $\overline{\text{ACOK}}$ deglitch time set to minimum (<50 µs). To change this option, VCC pin voltage must be above UVLO and ACDET pin voltage must be above 0.6 V to enable IC SMBus communication and set this bit to 1 to disable the $\overline{\text{ACOK}}$ deglitch timer. After POR the bit default value is 0 and $\overline{\text{ACOK}}$ deglitch time is 1.3 s for bq24707 and 1.2 ms for bq24707A.
[14:13]	WATCHDOG Timer Adjust	Set maximum delay between consecutive SMBus Write charge voltage or charge current command. The charge is suspended if the IC does not receive write charge voltage or write charge current command within the watchdog time period and watchdog timer is enabled. The charge is resumed after receive write charge voltage or write charge current command when watchdog timer expires and charge suspends. 00: Disable Watchdog Timer 01: Enabled, 44 s 10: Enabled, 88 s 11: Enable Watchdog Timer (175 s) <default at POR>
[12:11]	Not In Use	11 at POR
[10]	EMI Switching Frequency Adjust	0: Reduce PWM switching frequency by 18% <default at POR> 1: Increase PWM switching frequency by 18%
[9]	EMI Switching Frequency Enable	0: Disable adjust PWM switching frequency <default at POR> 1: Enable adjust PWM switching frequency
[8:7]	IFAULT_HI Comparator Threshold Adjust	Short-circuit protection high-side MOSFET voltage drop comparator threshold. 00: 300 mV 01: 500 mV 10: 700 mV <default at POR> 11: 900 mV
[6]	Not In Use	0 at POR
[5]	IOUT Selection	0: IOUT is the 20× adapter current amplifier output <default at POR> 1: IOUT is the 20× charge current amplifier output
[4]	Comparator Threshold Adjust	0: 0.6 V <default at POR> 1: 2.4 V
[3]	Not In Use	0 at POR

Copyright © 2010–2015, Texas Instruments Incorporated

Table 3. Charge Options Register (0x12h) (continued)

BIT	BIT NAME	DESCRIPTION
[2:1]	ACOC Threshold Adjust	00: Disable ACOC 01: 1.33× of input current regulation limit 10: 1.66× of input current regulation limit <default at POR> 11: 2.22× of input current regulation limit
[0]	Charge Inhibit	0: Enable Charge <default at POR> 1: Inhibit Charge

8.5.4 Setting the Charge Current

To set the charge current, write a 16-bit ChargeCurrent() command (0x14H or 0b00010100) using the data format listed in Table 4. With a 10-mΩ sense resistor, the IC provides a charge current range of 128 mA to 8.128 A, with 64-mA step resolution. Sending ChargeCurrent() below 128 mA or above 8.128 A clears the register and terminates charging. Upon POR, charge current is 0 A. A 0.1-µF capacitor between SRP and SRN for differential mode filtering, a 0.1-µF capacitor between SRN and ground for common-mode filtering, and an optional 0.1-µF capacitor between SRP and ground for common-mode filtering is recommended. Meanwhile, the capacitance on SRP should not be higher than 0.1 µF to properly sense the voltage across SRP and SRN for cycle-by-cycle undercurrent and overcurrent detection.

The SRP and SRN pins are used to sense R_{SR} with a default value of 10 mΩ. However, resistors of other values can also be used. With a larger sense resistor comes a larger sense voltage and higher regulation accuracy, but at the expense of higher conduction loss. If the current sensing resistor value is too high, it may trigger overcurrent protection threshold due to the current ripple voltage being too high. In such a case, either a higher inductance value or a lower current-sensing resistor value should be used to limit the current ripple voltage level. TI recommends a current-sensing resistor value of no more than 20 mΩ

To provide secondary protection, the IC has an ILIM pin with which the user can program the maximum allowed charge current. Internal charge current limit is the lower one between the voltage set by ChargeCurrent(), and voltage on the ILIM pin. To disable this function, the user can pull ILIM above 1.6 V, which is the maximum charge current regulation limit. The following equation shows the voltage should add on the ILIM pin with respect to the preferred charge current limit:

$$V_{ILIM} = 20 \times \left(V_{SRP} - V_{SRN}\right) = 20 \times I_{CHG} \times R_{SR} \quad (1)$$

Table 4. Charge Current Register (0x14h), Using 10-mΩ Sense Resistor

BIT	BIT NAME	DESCRIPTION
0		Not used.
1		Not used.
2		Not used.
3		Not used.
4		Not used.
5		Not used.
6	Charge Current, DACICHG 0	0 = Adds 0 mA of charger current. 1 = Adds 64 mA of charger current.
7	Charge Current, DACICHG 1	0 = Adds 0 mA of charger current. 1 = Adds 128 mA of charger current.
8	Charge Current, DACICHG 2	0 = Adds 0 mA of charger current. 1 = Adds 256 mA of charger current.
9	Charge Current, DACICHG 3	0 = Adds 0 mA of charger current. 1 = Adds 512 mA of charger current.
10	Charge Current, DACICHG 4	0 = Adds 0 mA of charger current. 1 = Adds 1024 mA of charger current.
11	Charge Current, DACICHG 5	0 = Adds 0 mA of charger current. 1 = Adds 2048 mA of charger current.
12	Charge Current, DACICHG 6	0 = Adds 0 mA of charger current. 1 = Adds 4096 mA of charger current.
13		Not used.

Copyright © 2010–2015, Texas Instruments Incorporated

Table 4. Charge Current Register (0x14h), Using 10-mΩ Sense Resistor (continued)

BIT	BIT NAME	DESCRIPTION
14		Not used.
15		Not used.

8.5.5 Setting the Charge Voltage

To set the output charge regulation voltage, write a 16bit ChargeVoltage() command (0x15H or 0b00010101) using the data format listed inTable 5. The IC provides a charge voltage range from 1.024 V to 19.200 V, with a 16-mV step resolution. Sending ChargeVoltage() below 1.024 V or above 19.2 V clears the register and terminates charging. Upon POR, the charge voltage limit is 0 V.

The SRN pin is used to sense the battery voltage for voltage regulation and should be connected as close to the battery as possible, and directly place a decoupling capacitor (0.1 µF recommended) as close to the IC as possible to decouple high frequency noise.

Table 5. Charge Voltage Register (0x15h)

BIT	BIT NAME	DESCRIPTION
0		Not used.
1		Not used.
2		Not used.
3		Not used.
4	Charge Voltage, DACV 0	0 = Adds 0 mV of charger voltage. 1 = Adds 16 mV of charger voltage.
5	Charge Voltage, DACV 1	0 = Adds 0 mV of charger voltage. 1 = Adds 32 mV of charger voltage.
6	Charge Voltage, DACV 2	0 = Adds 0 mV of charger voltage. 1 = Adds 64 mV of charger voltage.
7	Charge Voltage, DACV 3	0 = Adds 0 mV of charger voltage. 1 = Adds 128 mV of charger voltage.
8	Charge Voltage, DACV 4	0 = Adds 0 mV of charger voltage. 1 = Adds 256 mV of charger voltage.
9	Charge Voltage, DACV 5	0 = Adds 0 mV of charger voltage. 1 = Adds 512 mV of charger voltage.
10	Charge Voltage, DACV 6	0 = Adds 0 mV of charger voltage. 1 = Adds 1024 mV of charger voltage.
11	Charge Voltage, DACV 7	0 = Adds 0 mV of charger voltage. 1 = Adds 2048 mV of charger voltage.
12	Charge Voltage, DACV 8	0 = Adds 0 mV of charger voltage. 1 = Adds 4096 mV of charger voltage.
13	Charge Voltage, DACV 9	0 = Adds 0 mV of charger voltage. 1 = Adds 8192 mV of charger voltage.
14	Charge Voltage, DACV 10	0 = Adds 0 mV of charger voltage. 1 = Adds 16384 mV of charger voltage.
15		Not used.

8.5.6 Setting Input Current

System current normally fluctuates as portions of the system are powered up or put to sleep. With the input current limit, the output current requirement of the AC wall adapter can be lowered, reducing system cost.

The total input current, from a wall cube or other DC source, is the sum of the system supply current and the current required by the charger. When the input current exceeds the set input current limit, the IC decreases the charge current to provide priority to system load current. As the system current rises, the available charge current drops linearly to zero. Thereafter, all input current goes to system load and input current increases.

During DPM regulation, the total input current is the sum of the device supply current I_{BIAS}, the charger input current, and the system load current I_{LOAD}, and can be estimated as follows:

Copyright © 2010–2015, Texas Instruments Incorporated

$$I_{INPUT} = I_{LOAD} + \left[\frac{I_{BATTERY} \times V_{BATTERY}}{V_{IN} \times \eta} \right] + I_{BIAS} \quad (2)$$

where

- η is the efficiency of the charger buck converter (typically 85% to 95%).

To set the input current limit, write a 16-bit InputCurrent() command (0x3FH or 0b00111111) using the data format listed in Table 6. When using a 10-mΩ sense resistor, the IC provides an input-current limit range of 128 mA to 8.064 A, with 128-mA resolution. An input current limit set to no less than 512 mA is suggested. Sending InputCurrent() below 128 mA or above 8.064 A clears the register and terminates charging. Upon POR, the default input current limit is 4096 mA.

The ACP and ACN pins are used to sense R_{AC} with a default value of 10 mΩ. However, resistors of other values can also be used. With a larger sense resistor, comes a larger sense voltage, and a higher regulation accuracy; but, at the expense of higher conduction loss.

Instead of using the internal DPM loop, the user can build up an external input current regulation loop and have the feedback signal on ILIM. To disable the internal DPM loop, set the input current limit register value to a maximum 8.064 A or a value much higher than the external DPM set point.

If input current rises above 108% of the input current limit set point, the charger shuts down immediately to let the input current fall fast. After stopping charge, the charger soft restarts to charge the battery if the adapter still has power left to charge the battery. This prevents overloading the adapter to crash when system has a high and fast loading transient. The wait time between shutdown and restart charging is a natural response time of the input current limit loop.

Table 6. Input Current Register (0x3fh), Using 10-mΩ Sense Resistor

BIT	BIT NAME	DESCRIPTION
0		Not used.
1		Not used.
2		Not used.
3		Not used.
4		Not used.
5		Not used.
6		Not used.
7	Input Current, DACIIN 0	0 = Adds 0 mA of input current. 1 = Adds 128 mA of input current.
8	Input Current, DACIIN 1	0 = Adds 0 mA of input current. 1 = Adds 256 mA of input current.
9	Input Current, DACIIN 2	0 = Adds 0 mA of input current. 1 = Adds 512 mA of input current.
10	Input Current, DACIIN 3	0 = Adds 0 mA of input current. 1 = Adds 1024 mA of input current.
11	Input Current, DACIIN 4	0 = Adds 0 mA of input current. 1 = Adds 2048 mA of input current.
12	Input Current, DACIIN 5	0 = Adds 0 mA of input current. 1 = Adds 4096 mA of input current.
13		Not used.
14		Not used.
15		Not used.

8.5.7 Adapter Detect and $\overline{\text{ACOK}}$ Output

The IC uses an $\overline{\text{ACOK}}$ comparator to determine the source of power on the VCC pin, either from the battery or adapter. An external resistor voltage divider attenuates the adapter voltage before it goes to ACDET. The adapter detect threshold should typically be programmed to a value greater than the maximum battery voltage but lower than the maximum allowed adapter voltage.

Copyright © 2010–2015, Texas Instruments Incorporated

The open-drain $\overline{ACOK}$ output requires an external pullup resistor to the system digital rail for a high level. It can be pulled to ground under the following conditions:

- V_{VCC} > UVLO.
- 2.4 V < V_{ACDET} (not in low input voltage condition).
- V_{VCC}–V_{SRN} > 245 mV (not in sleep mode).

The default delay is 1.3 s for bq24707 and 1.2 ms for bq24707A after ACDET has valid voltage to make $\overline{ACOK}$ pull low. The delay can be reduced by a SMBus command (ChargeOption() bit[15] = 0 $\overline{ACOK}$ delay 1.3 s for bq24707 and 1.2 ms for bq24707A, bit[15] = 1 $\overline{ACOK}$ no delay). To change this option, the VCC pin voltage must be above UVLO and the ACDET pin voltage must be above 0.6 V to enable IC SMBus communication and set ChargeOption() bit[15] to 1 to disable the $\overline{ACOK}$ deglitch timer.

8.5.8 Converter Operation

The synchronous buck PWM converter uses a fixed-frequency voltage mode control scheme and internal type III compensation network. The LC output filter generates the following characteristic resonant frequency:

$$f_o = \frac{1}{2\pi \sqrt{L_o C_o}} \quad (3)$$

The resonant frequency f_o is used to determine the compensation to ensure there is sufficient phase margin and gain margin for the target bandwidth. The LC output filter should be selected to generate a resonant frequency of 10–20 kHz nominal for the best performance. The suggested component values per charge current with a 750-kHz default switching frequency is shown in Table 7.

Ceramic capacitors show a DC-bias effect. This effect reduces the effective capacitance when a DC-bias voltage is applied across a ceramic capacitor, as on the output capacitor of a charger. The effect may lead to a significant capacitance drop, especially for high output voltages and small capacitor packages. See the manufacturer's data sheet about the performance with a DC-bias voltage applied. It may be necessary to choose a higher voltage rating or nominal capacitance value to get the required value at the operating point.

Table 7. Suggested Component Values per Charge Current With a Default 750-kHz Switching Frequency

CHARGE CURRENT	2 A	3 A	4 A	6 A	8 A
Output inductor Lo (µH)	6.8 or 8.2	5.6 or 6.8	3.3 or 4.7	3.3	2.2
Output capacitor Co (µF)	20	20	20	30	40
Sense resistor (mΩ)	10	10	10	10	10

The IC has three loops of regulation: input current, charge current, and charge voltage. The three loops are brought together internally at the error amplifier. The maximum voltage of the three loops appears at the output of the error amplifier EAO (see). An internal saw-tooth ramp is compared to the internal error control signal EAO to vary the duty-cycle of the converter. The ramp has an offset of 200 mV to allow 0% duty-cycle.

When the battery charge voltage approaches the input voltage, the EAO signal is allowed to exceed the saw-tooth ramp peak to get a 100% duty-cycle. If voltage across the BTST and PHASE pins falls below 4.3 V, a refresh cycle starts and the low-side N-channel power MOSFET is turned on to recharge the BTST capacitor. It can achieve a duty-cycle of up to 99.5%.

8.5.9 EMI Switching Frequency Adjust

The charger switching frequency can be adjusted ±18% to solve EMI issue through SMBus command. ChargeOption() bit [9]=0 disable the frequency adjust function. To enable frequency adjust function, set ChargeOption() bit[9]=1. Set ChargeOption() bit [10]=0 to reduce switching frequency, set bit[10]=1 to increase switching frequency.

If frequency is reduced, for a fixed inductor the current ripple is increased. Inductor value must be carefully selected so that it will not trigger cycle-by-cycle peak overcurrent protection even for the worst condition such as higher input voltage, 50% duty cycle, lower inductance and lower switching frequency.

Copyright © 2010–2015, Texas Instruments Incorporated

8.5.10 Inductor Short, MOSFET Short Protection

The IC has a unique short-circuit protection feature. The cycle-by-cycle current monitoring feature of the IC is achieved through monitoring the voltage drop across $R_{DS(on)}$ of the MOSFETs after a certain amount of blanking time. In case of MOSFET short or inductor short circuit, the overcurrent condition is sensed by two comparators and two counters will be triggered. After seven times of short circuit events, the charger will be latched off. To reset the charger from latch-off status, the IC VCC pin must be pulled down below UVLO or ACDET pin must be pulled down below 0.6 V. This can be achieved by removing the adapter and shut down the operation system. The low-side MOSFET short circuit voltage drop threshold is fixed to typical 110 mV. The high-side MOSFET short-circuit voltage drop threshold can be adjusted through SMBus command. ChargeOption() bit[8:7] = 00, 01, 10, 11 set the threshold 300 mV, 500 mV, 700 mV, and 900 mV, respectively.

Due to the certain amount of blanking time to prevent noise when MOSFET just turns on, the cycle-by-cycle charge overcurrent protection may detect high current and turn off MOSFET first before the short-circuit protection circuit can detect short condition because the blanking time has not finished. In such a case, the charge may not be able to detect shorts circuit and counter may not be able to count to seven then latch off. Instead, the charge may continuously keep switching with very narrow duty cycle to limit the cycle-by-cycle current peak value. However, the charger should still be safe and will not cause failure because the duty cycle is limited to a very short of time and MOSFET should be still inside the safety operation area. During a soft-start period, it may take a long time instead of just seven switching cycles to detect short circuit based on the same blanking time reason.

8.5.11 Independent Comparator

The IC has an independent comparator can be used to compare input current, charge current, or battery voltage with internal reference . Program CMPIN voltage by connecting a resistor-divider from IOUT pin to CMPIN pin to GND pin for adapter or charge current comparison or from SRN pin to CMPIN pin to GND pin for battery voltage comparison. When CMPIN is above internal reference, CMPOUT is pulled to external pullup rail by external pullup resistor. When CMPIN is below internal reference, CMPOUT is pulled to GND by internal MOSFET. Place a resistor between CMPIN and CMPOUT to program hysteresis. The internal reference can be set to 0.6 V or 2.4 V through SMBus command (ChargeOption() bit[4]=0 set internal reference 0.6 V, bit[4]=1 set 2.4 V).

There is one 50-kΩ series resistor R_S and one 2000-kΩ pulldown resistor R_{DOWN} for CMPIN pin as shown in Figure 15. To get the accurate comparison set point, these two resistors must be included in the calculation. A spreadsheet calculation tool has been developed to simplify the design work. User can download from the TI Web site at www.ti.com under the IC product folder.

Figure 15 also shows one application circuit using this comparator for battery voltage comparison. After using the superposition principle and fill the components value into the spreadsheet the battery voltage threshold is 9.45 V for rising edge and 8.99 V for falling edge.

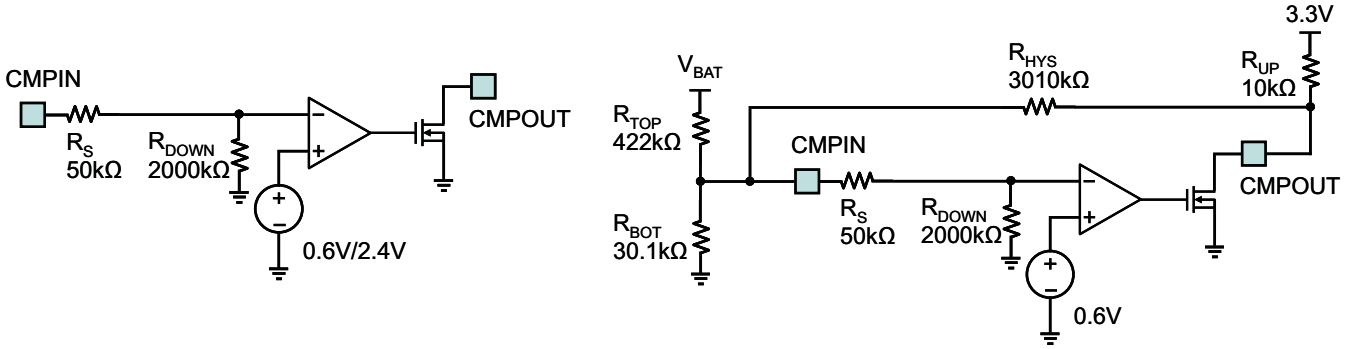

(a) Internal Circuit showing the series resistor and pull down resistor

(b) Application Circuit, 9.45V rising edge and 8.99V falling edge for 3cell battery

Figure 15. IC Comparator Internal Circuit and Application Circuit

9 Application and Implementation

NOTE

Information in the following applications sections is not part of the TI component specification, and TI does not warrant its accuracy or completeness. TI's customers are responsible for determining suitability of components for their purposes. Customers should validate and test their design implementation to confirm system functionality.

9.1 Application Information

The bq24707x is a high-efficiency, synchronous, NVDC-1 battery charge controller, offering low component count for space-constrained, multi-chemistry battery charging applications. The bq24707EVM-558 evaluation module (EVM) is a complete charger module for evaluating the bq24707. The application curves were taken using the bq24707AEVM-558. Refer to the EVM user's guide (SLUU445) for EVM information.

9.2 Typical Application

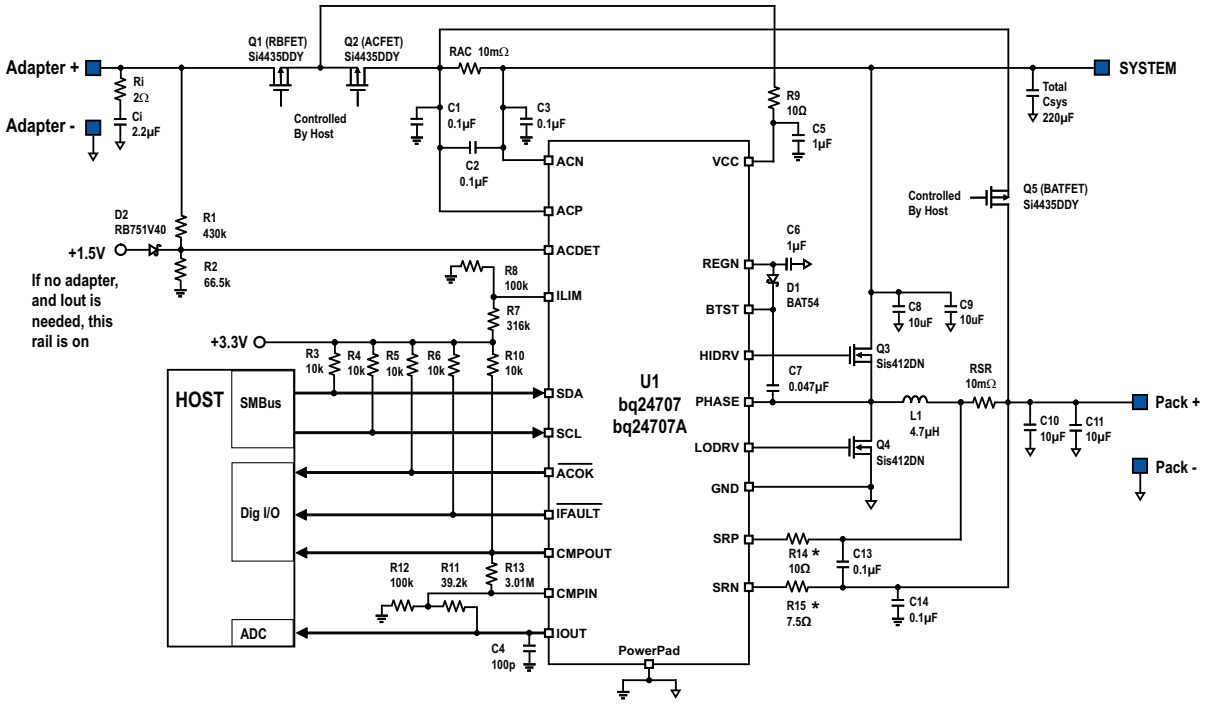

F_s = 750 kHz, I_{adpt} = 4.096 A, I_{chrg} = 2.944 A, I_{lim} = 4 A, V_{chrg} = 12.592 V, 90-W adapter and 3S2P battery pack

See *Negative Output Voltage Protection* about negative output voltage protection for hard shorts on battery-to-ground or battery-reverse connection.

Figure 16. Typical System Schematic

Copyright © 2010–2015, Texas Instruments Incorporated

Typical Application (continued)

9.2.1 Design Requirements

For this design example, use the parameters listed in Table 8 as the input parameters.

Table 8. Design Parameters

DESIGN PARAMETER	EXAMPLE VALUE
Input Voltage(1)	17.7 V < Adapter Voltage < 24 V
Input Current Limit (1)	3.2 A for 65-W adapter
Battery Charge Voltage(2)	12592 mV for 3-s battery
Battery Charge Current(2)	4096 mA for 3-s battery
Battery Discharge Current(2)	6144 mA for 3-s battery

(1) Refer to battery specification for settings.
(2) Refer to adapter specification for settings for Input Voltage and Input Current Limit.

9.2.2 Detailed Design Procedure

9.2.2.1 Negative Output Voltage Protection

Reversely insert the battery pack into the charger output during production or hard shorts on battery-to-ground will generate negative output voltage on SRP and SRN pin. IC internal electrostatic-discharge (ESD) diodes from GND pin to SRP or SRN pins and two anti-parallel (AP) diodes between SRP and SRN pins can be forward biased and negative current can pass through the ESD diodes and AP diodes when output has negative voltage. Insert two small resistors for SRP and SRN pins to limit the negative current level when output has negative voltage. Suggest resistor value is 10 Ω for SRP pin and 7 Ω to 8 Ω for SRN pin. After adding small resistors, the suggested precharge current is at least 192 mA for a 10-mΩ current sensing resistor.

9.2.2.2 Inductor Selection

The IC has three selectable fixed switching frequencies. Higher switching frequency allows the use of smaller inductor and capacitor values. Inductor saturation current should be higher than the charging current (I_{CHG}) plus half the ripple current (I_{RIPPLE}):

$$I_{SAT} \geq I_{CHG} + (1/2)\, I_{RIPPLE} \quad (4)$$

The inductor ripple current depends on input voltage (V_{IN}), duty cycle ($D = V_{OUT}/V_{IN}$), switching frequency (f_S), and inductance (L):

$$I_{RIPPLE} = \frac{V_{IN} \times D \times (1 - D)}{f_S \times L} \quad (5)$$

The maximum inductor ripple current happens with D = 0.5 or close to 0.5. For example, the battery charging voltage range is from 9 V to 12.6 V for 3-cell battery pack. For 20-V adapter voltage, 10-V battery voltage gives the maximum inductor ripple current. Another example is 4-cell battery, the battery voltage range is from 12 V to 16.8 V, and 12-V battery voltage gives the maximum inductor ripple current.

Usually inductor ripple is designed in the range of (20-40%) maximum charging current as a trade-off between inductor size and efficiency for a practical design.

The IC has charge undercurrent protection (UCP) by monitoring charging current-sensing resistor cycle-by-cycle. The typical cycle-by-cycle UCP threshold is 5-mV falling edge corresponding to 0.5-A falling edge for a 10-mΩ charging current-sensing resistor. When the average charging current is less than 125 mA for a 10-mΩ charging current-sensing resistor, the low-side MOSFET is off until BTST capacitor voltage needs to refresh charge. As a result, the converter relies on low-side MOSFET body diode for the inductor freewheeling current.

9.2.2.3 Input Capacitor

Input capacitor should have enough ripple current rating to absorb input switching ripple current. The worst case RMS ripple current is half of the charging current when duty cycle is 0.5. If the converter does not operate at 50% duty cycle, then the worst case capacitor RMS current occurs where the duty cycle is closest to 50% and can be estimated by Equation 6:

Copyright © 2010–2015, Texas Instruments Incorporated

$$I_{CIN} = I_{CHG} \times \sqrt{D \times (1 - D)} \quad (6)$$

Low ESR ceramic capacitor such as X7R or X5R is preferred for input decoupling capacitor and should be placed to the drain of the high-side MOSFET and source of the low-side MOSFET as close as possible. Voltage rating of the capacitor must be higher than normal input voltage level. 25-V rating or higher capacitor is preferred for 19- to 20-V input voltage. 10- to 20-µF capacitance is suggested for typical of 3- to 4-A charging current.

Ceramic capacitors show a DC-bias effect. This effect reduces the effective capacitance when a DC-bias voltage is applied across a ceramic capacitor, as on the input capacitor of a charger. The effect may lead to a significant capacitance drop, especially for high input voltages and small capacitor packages. See the manufacturer's data sheet about the performance with a DC bias voltage applied. It may be necessary to choose a higher voltage rating or nominal capacitance value to get the required value at the operating point.

9.2.2.4 Output Capacitor

Output capacitor also should have enough ripple current rating to absorb output switching ripple current. The output capacitor RMS current is given:

$$I_{COUT} = \frac{I_{RIPPLE}}{2 \times \sqrt{3}} \approx 0.29 \times I_{RIPPLE} \quad (7)$$

The IC has internal loop compensator. To get good loop stability, the resonant frequency of the output inductor and output capacitor should be designed from 10 kHz to 20 kHz. The preferred ceramic capacitor is 25-V X7R or X5R for output capacitor. 10- to 20-µF capacitance is suggested for typical of 3- to 4-A charging current. Place capacitors after charging current-sensing resistor to get the best charge current regulation accuracy.

Ceramic capacitors show a DC-bias effect. This effect reduces the effective capacitance when a DC-bias voltage is applied across a ceramic capacitor, as on the output capacitor of a charger. The effect may lead to a significant capacitance drop, especially for high output voltages and small capacitor packages. See the manufacturer's data sheet about the performance with a DC-bias voltage applied. It may be necessary to choose a higher voltage rating or nominal capacitance value to get the required value at the operating point.

9.2.2.5 Power MOSFETs Selection

Two external N-channel MOSFETs are used for a synchronous switching battery charger. The gate drivers are internally integrated into the IC with 6 V of gate drive voltage. 30-V or higher voltage rating MOSFETs are preferred for 19- to 20-V input voltage.

Figure-of-merit (FOM) is usually used for selecting proper MOSFET based on a tradeoff between the conduction loss and switching loss. For top-side MOSFET, FOM is defined as the product of the ON-resistance of the MOSFET, $R_{DS(ON)}$, and the gate-to-drain charge, Q_{GD}. For bottom-side MOSFET, FOM is defined as the product of the ON-resistance of the MOSFET, $R_{DS(ON)}$, and the total gate charge, Q_G.

$$FOM_{top} = R_{DS(on)} \times Q_{GD}; \; FOM_{bottom} = R_{DS(on)} \times Q_G \quad (8)$$

The lower the FOM value, the lower the total power loss. Usually lower $R_{DS(ON)}$ has higher cost with the same package size.

The top-side MOSFET loss includes conduction loss and switching loss. The loss is a function of duty cycle ($D=V_{OUT}/V_{IN}$), charging current (I_{CHG}), MOSFET's ON-resistance ®$_{DS(ON)}$), input voltage (V_{IN}), switching frequency (f_S), turnon time (t_{on}), and turnoff time (t_{off}):

$$P_{top} = D \times I_{CHG}^2 \times R_{DS(on)} + \frac{1}{2} \times V_{IN} \times I_{CHG} \times (t_{on} + t_{off}) \times f_s \quad (9)$$

The first item represents the conduction loss. Usually MOSFET $R_{DS(ON)}$ increases by 50% with 100°C junction temperature rise. The second term represents the switching loss. The MOSFET turnon and turnoff times are given by:

$$t_{on} = \frac{Q_{SW}}{I_{on}}, \quad t_{off} = \frac{Q_{SW}}{I_{off}}$$

Copyright © 2010–2015, Texas Instruments Incorporated

where

- Q_{sw} is the switching charge.
- I_{on} is the turnon gate driving current.
- I_{off} is the turnoff gate driving current.

(10)

If the switching charge is not given in MOSFET data sheet, it can be estimated by gate-to-drain charge (Q_{GD}) and gate-to-source charge (Q_{GS}):

$$Q_{SW} = Q_{GD} + \frac{1}{2} \times Q_{GS} \quad (11)$$

Gate driving current can be estimated by REGN voltage (V_{REGN}), MOSFET plateau voltage (V_{plt}), total turnon gate resistance (R_{on}) and turnoff gate resistance (R_{off}) of the gate driver:

$$I_{on} = \frac{V_{REGN} - V_{plt}}{R_{on}}, \quad I_{off} = \frac{V_{plt}}{R_{off}} \quad (12)$$

The conduction loss of the bottom-side MOSFET is calculated with the following equation when it operates in synchronous continuous conduction mode:

$$P_{bottom} = (1 - D) \times I_{CHG}^2 \times R_{DS(on)} \quad (13)$$

When charger operates in nonsynchronous mode, the bottom-side MOSFET is off. As a result all the freewheeling current goes through the body-diode of the bottom-side MOSFET. The body diode power loss depends on its forward voltage drop (V_F), nonsynchronous mode charging current ($I_{NONSYNC}$), and duty cycle (D).

$$P_D = V_F \times I_{NONSYNC} \times (1 - D) \quad (14)$$

The maximum charging current in nonsynchronous mode can be up to 0.25 A for a 10-mΩ charging current-sensing resistor or 0.5 A if battery voltage is less than 2.5 V. The minimum duty cycle happens at lowest battery voltage. Choose the bottom-side MOSFET with either an internal Schottky or body diode capable of carrying the maximum nonsynchronous mode charging current.

9.2.2.6 Input Filter Design

During adapter hot plug-in, the parasitic inductance and input capacitor from the adapter cable form a second-order system. The voltage spike at VCC pin maybe beyond IC maximum voltage rating and damage IC. The input filter must be carefully designed and tested to prevent overvoltage event on VCC pin.

There are several methods to damping or limit the over voltage spike during adapter hot plug-in. An electrolytic capacitor with high ESR as an input capacitor can damp the over voltage spike well below the IC maximum pin voltage rating. A high current capability TVS Zener diode can also limit the overvoltage level to an IC safe level. However these two solutions may not have low cost or small size.

A cost-effective and small-size solution is shown in Figure 17. The R1 and C1 are composed of a damping RC network to damp the hot plug-in oscillation. As a result, the overvoltage spike is limited to a safe level. D1 is used for reverse-voltage protection for VCC pin. C2 is the VCC pin decoupling capacitor and it should be placed as close as possible to the VCC pin. C2 value should be less than C1 value so R1 can dominant the equivalent ESR value to get enough damping effect. R2 is used to limit inrush current of D1 to prevent D1 getting damage when adapter hot plug-in. R2 and C2 should have a 10-µs time constant to limit the dv/dt on VCC pin to reduce inrush current when adapter hot plug in. R1 has high inrush current. R1 package must be sized enough to handle inrush current power loss according to resistor manufacturer's data sheet. The filter components value always need to be verified with real application and minor adjustments may need to fit in the real application circuit.

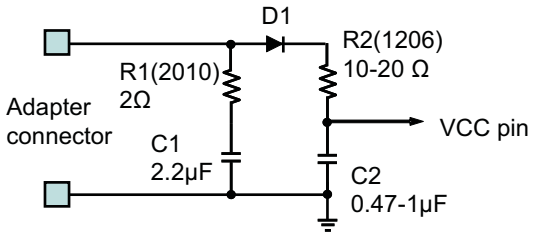

Figure 17. Input Filter

Table 9. Component List for Typical System Circuit of Figure 16

PART DESIGNATOR	QTY	DESCRIPTION
C1, C2, C3, C13, C14	5	Capacitor, Ceramic, 0.1 µF, 25 V, 10%, X7R, 0603
C4	1	Capacitor, Ceramic, 100 pF, 25 V, 10%, X7R, 0603
C5, C6	2	Capacitor, Ceramic, 1 µF, 25 V, 10%, X7R, 0603
C7	1	Capacitor, Ceramic, 0.047 µF, 25 V, 10%, X7R, 0603
C8, C9, C10, C11	4	Capacitor, Ceramic, 10 µF, 25 V, 10%, X7R, 1206
Ci	1	Capacitor, Ceramic, 2.2 µF, 25 V, 10%, X7R, 1210
Csys	1	Capacitor, Electrolytic, 220 µF, 25 V
D1	1	Diode, Schottky, 30 V, 200 mA, SOT-23, Fairchild, BAT54
D2	1	Diode, Schottky, 40 V, 120 mA, SOD-323, NXP, RB751V40
Q1, Q2, Q5	3	P-channel MOSFET, –30 V, –9.4 A, SO-8, Vishay Siliconix, Si4435DDY
Q3, Q4	2	N-channel MOSFET, 30 V, 12 A, PowerPAK 1212-8, Vishay Siliconix, SiS412DN
L1	1	Inductor, SMT, 4.7 µH, 5.5 A, Vishay Dale, IHLP2525CZER4R7M01
R1	1	Resistor, Chip, 430 kΩ, 1/10 W, 1%, 0603
R2	1	Resistor, Chip, 66.5 kΩ, 1/10 W, 1%, 0603
R3, R4, R5, R6, R10	5	Resistor, Chip, 10 kΩ, 1/10 W, 1%, 0603
R7	1	Resistor, Chip, 316 kΩ, 1/10 W, 1%, 0603
R8, R12	2	Resistor, Chip, 100 kΩ, 1/10 W, 1%, 0603
R9	1	Resistor, Chip, 10 Ω, 1/4 W, 1%, 1206
R11	1	Resistor, Chip, 39.2 kΩ, 1/10 W, 1%, 0603
R13	1	Resistor, Chip, 3.01 MΩ, 1/10 W, 1%, 0603
R14	1	Resistor, Chip, 10 Ω, 1/10 W, 5%, 0603
R15	1	Resistor, Chip, 7.5 Ω, 1/10 W, 5%, 0603
RAC, RSR	2	Resistor, Chip, 0.01 Ω, 1/2 W, 1%, 1206
Ri	1	Resistor, Chip, 2 Ω, 1/2 W, 1%, 1210
U1	1	Charger controller, 20-pin VQFN, TI, bq24707RGR or bq24707ARGR

9.2.3 Application Curves

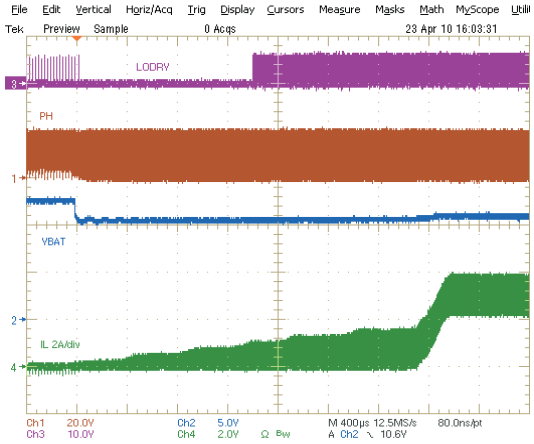

CH1: PHASE, 20 V/div; CH2: battery voltage, 5 V/div; CH3: LODRV, 10 V/div; CH4: inductor current, 2 A/div, 400 µs/div

Figure 18. Battery Insertion

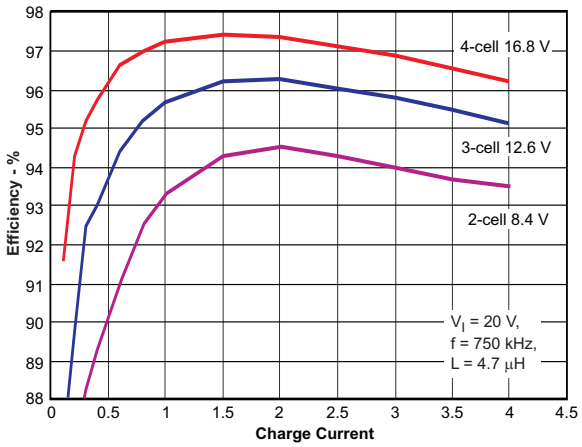

Figure 19. Efficiency vs Output Current

Copyright © 2010–2015, Texas Instruments Incorporated

10 Power Supply Recommendations

An external resistor voltage divider attenuates the adapter voltage before it goes to ACDET. The adapter detect threshold should typically be programmed to a value greater than the maximum battery voltage, but lower than the IC maximum allowed input voltage and system maximum allowed voltage.

When adapter is removed, the system is powered by the battery. Typically the battery depletion threshold should be greater than the minimum system voltage so that the battery capacity can be fully utilized for maximum battery life.

11 Layout

11.1 Layout Guidelines

The switching node rise and fall times should be minimized for minimum switching loss. Proper layout of the components to minimize high frequency current path loop (see Figure 21) is important to prevent electrical and magnetic field radiation and high-frequency resonant problems. The following is a PCB layout priority list for proper layout. Layout PCB according to this specific order is essential.

1. Place input capacitor as close as possible to the supply and ground connections of the switching MOSFET and use the shortest copper trace connection. These parts should be placed on the same layer of PCB instead of on different layers and using vias to make this connection.
2. The IC should be placed close to the gate terminals of the switching MOSFET and keep the gate drive signal traces short for a clean MOSFET drive. The IC can be placed on the other side of the PCB of the switching MOSFET.
3. Place inductor input terminal to the output terminal of the switching MOSFET as close as possible. Minimize the copper area of this trace to lower electrical and magnetic field radiation, but make the trace wide enough to carry the charging current. Do not use multiple layers in parallel for this connection. Minimize parasitic capacitance from this area to any other trace or plane.
4. The charging current-sensing resistor should be placed right next to the inductor output. Route the sense leads connected across the sensing resistor back to the IC in same layer, close to each other (minimize loop area) and do not route the sense leads through a high-current path (see Figure 22 for Kelvin connection for best current accuracy). Place decoupling capacitor on these traces next to the IC
5. Place output capacitor next to the sensing resistor output and ground
6. Output capacitor ground connections need to be tied to the same copper that connects to the input capacitor ground before connecting to system ground.
7. Use a single ground connection to tie charger power ground to charger analog ground; use analog ground copper pour just beneath the IC, but avoid power pins to reduce inductive and capacitive noise coupling.
8. Route analog ground separately from power ground. Connect analog ground and connect power ground separately. Connect analog ground and power ground together using power pad as the single ground connection point, or use a 0-Ω resistor to tie analog ground to power ground (power pad should tie to analog ground in this case if possible).
9. Decoupling capacitors should be placed next to the IC pins to make trace connection as short as possible.
10. It is critical to solder the exposed power pad on the backside of the IC package to the PCB ground. Ensure that there are sufficient thermal vias directly under the IC, connecting to the ground plane on the other layers.
11. The via size and number should be enough for a given current path.

See the EVM design for the recommended component placement with trace and via locations. For the QFN information, see SCBA017 and SLUA271.

11.1.1 IC Design Guideline

The IC has a unique short circuit protection feature. Its cycle-by-cycle current monitoring feature is achieved through monitoring the voltage drop across Rdson of the MOSFETs after a certain amount of blanking time. In case of MOSFET short or inductor short circuit, the overcurrent condition is sensed by two comparators and two counters will be triggered. After seven times of short circuit events, the charger will be latched off. The way to reset the charger from latch-off status is reconnect adapter. Figure 20 shows the IC short-circuit protection block diagram.

Copyright © 2010–2015, Texas Instruments Incorporated

Layout Guidelines (continued)

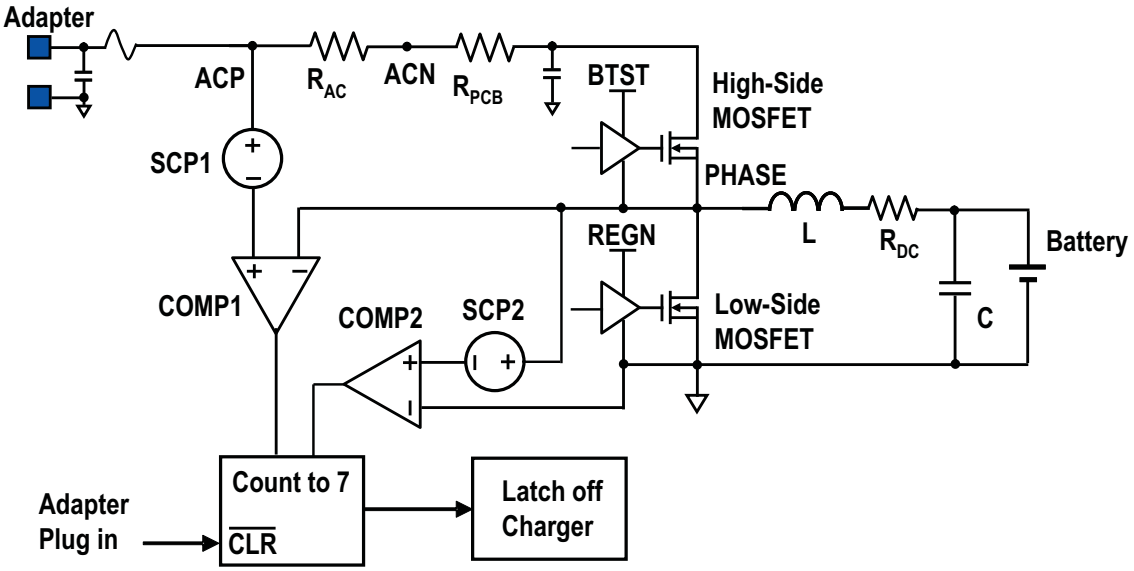

Figure 20. Block Diagram of IC Short-Circuit Protection

In normal operation, low-side MOSFET current is from source-to-drain, which generates negative voltage drop when it turns on As a result, the overcurrent comparator cannot be triggered. When high-side switch short-circuit or inductor short-circuit happens, the large current of low-side MOSFET is from drain-to-source and can trigger low-side switch overcurrent comparator. IC senses low-side switch voltage drop by PHASE pin and GND pin.

The high-side FET short is detected by monitoring the voltage drop between ACP and PHASE. As a result, it not only monitors the high-side switch voltage drop, but also the adapter sensing resistor voltage drop and PCB trace voltage drop from ACN terminal of RAC to charger high-side switch drain. Usually, there is a long trace between input sensing resistor and charger converting input, a careful layout will minimize the trace effect.

The total voltage drop sensed by IC can be expressed as Equation 15.

$$V_{top} = R_{AC} \times I_{DPM} + R_{PCB} \times (I_{CHRGIN} + (I_{DPM} - I_{CHRGIN}) \times k) + R_{DS(on)} \times I_{PEAK} \quad (15)$$

where

- R_{AC} is the AC adapter current sensing resistance
- I_{DPM} is the DPM current set point
- R_{PCB} is the PCB trace equivalent resistance
- I_{CHRGIN} is the charger input current
- k is the PCB factor
- $R_{DS(on)}$ is the high-side MOSFET turnon resistance
- I_{PEAK} is the peak current of inductor

Here, the PCB factor k equals 0 means the best layout shown in Figure 24, where the PCB trace only goes through charger input current, while k equals 1 means the worst layout shown in Figure 23, where the PCB trace goes through all the DPM current. The total voltage drop must below the high-side short circuit protection threshold to prevent unintentional charger shutdown in normal operation.

The low-side MOSFET short-circuit voltage drop threshold is fixed to typical 110 mV. The high-side MOSFET short-circuit voltage drop threshold can be adjusted through SMBus command. ChargeOption() bit[8:7] = 00, 01, 10, 11 set the threshold 300 mV, 500 mV, 700 mV, and 900 mV, respectively. For a fixed PCB layout, host should set proper short-circuit protection threshold level to prevent unintentional charger shutdown in normal operation.

Copyright © 2010–2015, Texas Instruments Incorporated

11.2 Layout Example

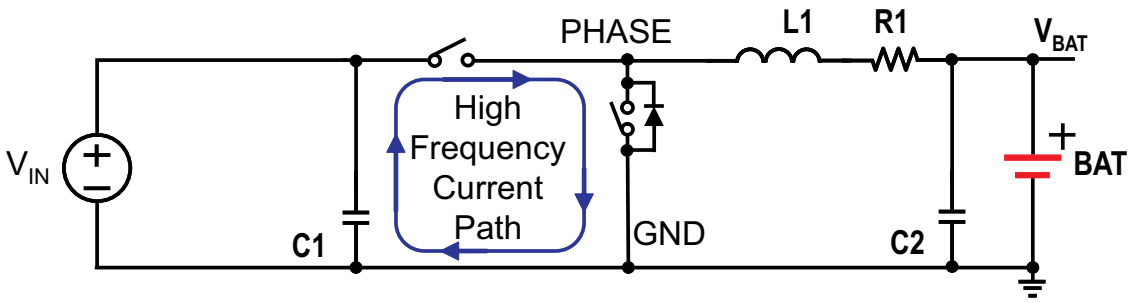

Figure 21. High-Frequency Current Path

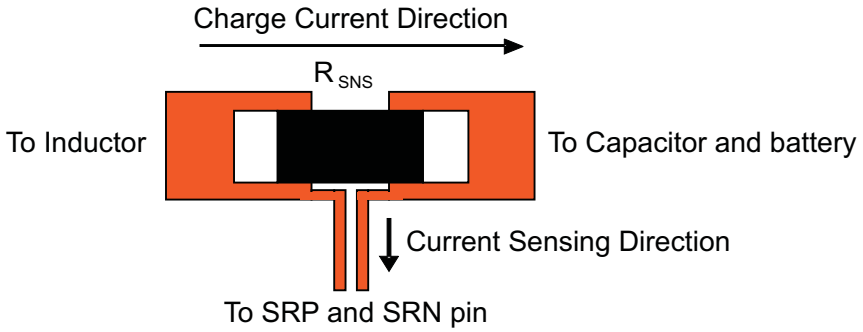

Figure 22. Sensing Resistor PCB Layout

To prevent unintentional charger shutdown in normal operation, MOSFET $R_{DS(on)}$ selection and PCB layout is very important. Figure 23 shows a PCB layout example that needs improvement and its equivalent circuit. In this layout, system current path and charger input current path are not separated; as a result, the system current causes voltage drop in the PCB copper and is sensed by the IC. The worst layout is when a system current pull-point is after charger input; as a result, all system current voltage drops are counted into overcurrent protection comparator. The worst case for IC is the total system current and charger input current sum equals DPM current. When the system pulls more current, the charger IC tries to regulate R_{AC} current as a constant current by reducing charging current.

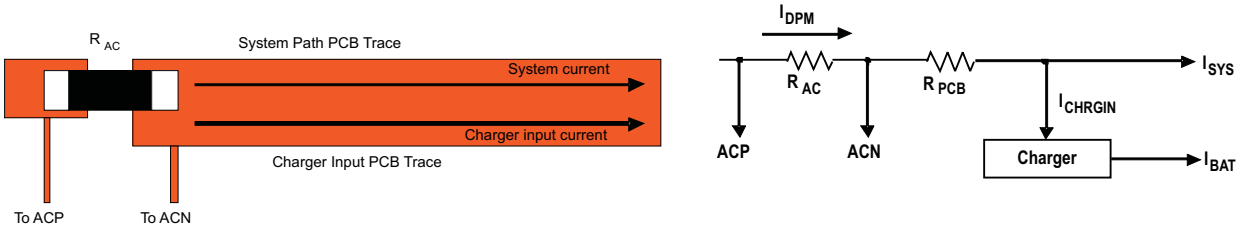

(a) PCB Layout **(b) Equivalent Circuit**

Figure 23. PCB Layout Example: Needs Improvement

Figure 24 shows the optimized PCB layout example. The system current path and charge input current path is separated; as a result, the IC only senses charger input current caused PCB voltage drop and minimized the possibility of unintentional charger shutdown in normal operation. This also makes PCB layout easier for high system current application.

Copyright © 2010–2015, Texas Instruments Incorporated

Layout Example (continued)

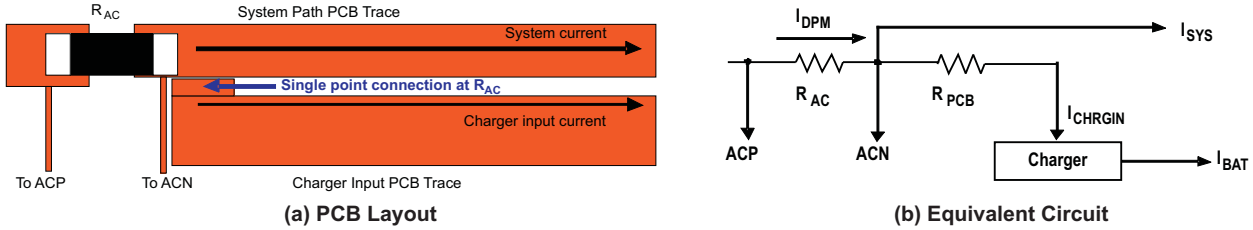

Figure 24. PCB Layout Example: Optimized

Copyright © 2010–2015, Texas Instruments Incorporated

12 Device and Documentation Support

12.1 Device Support

12.1.1 Third-Party Products Disclaimer

TI'S PUBLICATION OF INFORMATION REGARDING THIRD-PARTY PRODUCTS OR SERVICES DOES NOT CONSTITUTE AN ENDORSEMENT REGARDING THE SUITABILITY OF SUCH PRODUCTS OR SERVICES OR A WARRANTY, REPRESENTATION OR ENDORSEMENT OF SUCH PRODUCTS OR SERVICES, EITHER ALONE OR IN COMBINATION WITH ANY TI PRODUCT OR SERVICE.

12.2 Documentation Support

12.2.1 Related Documentation

For related documentation, see the following:

- *bq24707EVM for Multicell, Synchronous, Switch-Mode Charger With SMBus Interface*, SLUU445
- *Quad Flatpack No-Lead Logic Packages*, SCBA017
- *QFN/SON PCB Attachment*, SLUA271

12.3 Related Links

The table below lists quick access links. Categories include technical documents, support and community resources, tools and software, and quick access to sample or buy.

Table 10. Related Links

PARTS	PRODUCT FOLDER	SAMPLE & BUY	TECHNICAL DOCUMENTS	TOOLS & SOFTWARE	SUPPORT & COMMUNITY
bq24707	Click here	Click here	Click here	Click here	Click here
bq24707A	Click here	Click here	Click here	Click here	Click here

12.4 Community Resources

The following links connect to TI community resources. Linked contents are provided "AS IS" by the respective contributors. They do not constitute TI specifications and do not necessarily reflect TI's views; see TI's Terms of Use.

TI E2E™ Online Community ***TI's Engineer-to-Engineer (E2E) Community.*** Created to foster collaboration among engineers. At e2e.ti.com, you can ask questions, share knowledge, explore ideas and help solve problems with fellow engineers.

Design Support ***TI's Design Support*** Quickly find helpful E2E forums along with design support tools and contact information for technical support.

12.5 Trademarks

PowerPAD, E2E are trademarks of Texas Instruments.
All other trademarks are the property of their respective owners.

12.6 Electrostatic Discharge Caution



These devices have limited built-in ESD protection. The leads should be shorted together or the device placed in conductive foam during storage or handling to prevent electrostatic damage to the MOS gates.

12.7 Glossary

SLYZ022 — *TI Glossary*.

This glossary lists and explains terms, acronyms, and definitions.

Copyright © 2010–2015, Texas Instruments Incorporated

13 Mechanical, Packaging, and Orderable Information

The following pages include mechanical, packaging, and orderable information. This information is the most current data available for the designated devices. This data is subject to change without notice and revision of this document. For browser-based versions of this data sheet, refer to the left-hand navigation.

Copyright © 2010–2015, Texas Instruments Incorporated

PACKAGING INFORMATION

Orderable part number	Status (1)	Material type (2)	Package | Pins	Package qty | Carrier	RoHS (3)	Lead finish/ Ball material (4)	MSL rating/ Peak reflow (5)	Op temp (°C)	Part marking (6)
BQ24707ARGRR	Active	Production	VQFN (RGR) | 20	3000 | LARGE T&R	Yes	NIPDAU	Level-2-260C-1 YEAR	-40 to 85	BQ07A
BQ24707ARGRR.A	Active	Production	VQFN (RGR) | 20	3000 | LARGE T&R	Yes	NIPDAU	Level-2-260C-1 YEAR	-40 to 85	BQ07A
BQ24707ARGRR.B	Active	Production	VQFN (RGR) | 20	3000 | LARGE T&R	Yes	NIPDAU	Level-2-260C-1 YEAR	-40 to 85	BQ07A
BQ24707ARGRT	Active	Production	VQFN (RGR) | 20	250 | SMALL T&R	Yes	NIPDAU	Level-2-260C-1 YEAR	-40 to 85	BQ07A
BQ24707ARGRT.A	Active	Production	VQFN (RGR) | 20	250 | SMALL T&R	Yes	NIPDAU	Level-2-260C-1 YEAR	-40 to 85	BQ07A
BQ24707ARGRT.B	Active	Production	VQFN (RGR) | 20	250 | SMALL T&R	Yes	NIPDAU	Level-2-260C-1 YEAR	-40 to 85	BQ07A
BQ24707RGRR	Active	Production	VQFN (RGR) | 20	3000 | LARGE T&R	Yes	NIPDAU	Level-2-260C-1 YEAR	-40 to 85	BQ707
BQ24707RGRR.A	Active	Production	VQFN (RGR) | 20	3000 | LARGE T&R	Yes	NIPDAU	Level-2-260C-1 YEAR	-40 to 85	BQ707
BQ24707RGRR.B	Active	Production	VQFN (RGR) | 20	3000 | LARGE T&R	Yes	NIPDAU	Level-2-260C-1 YEAR	-40 to 85	BQ707
BQ24707RGRT	Active	Production	VQFN (RGR) | 20	250 | SMALL T&R	Yes	NIPDAU	Level-2-260C-1 YEAR	-40 to 85	BQ707
BQ24707RGRT.A	Active	Production	VQFN (RGR) | 20	250 | SMALL T&R	Yes	NIPDAU	Level-2-260C-1 YEAR	-40 to 85	BQ707
BQ24707RGRT.B	Active	Production	VQFN (RGR) | 20	250 | SMALL T&R	Yes	NIPDAU	Level-2-260C-1 YEAR	-40 to 85	BQ707

(1) **Status:** For more details on status, see our product life cycle.

(2) **Material type:** When designated, preproduction parts are prototypes/experimental devices, and are not yet approved or released for full production. Testing and final process, including without limitation quality assurance, reliability performance testing, and/or process qualification, may not yet be complete, and this item is subject to further changes or possible discontinuation. If available for ordering, purchases will be subject to an additional waiver at checkout, and are intended for early internal evaluation purposes only. These items are sold without warranties of any kind.

(3) **RoHS values:** Yes, No, RoHS Exempt. See the TI RoHS Statement for additional information and value definition.

(4) **Lead finish/Ball material:** Parts may have multiple material finish options. Finish options are separated by a vertical ruled line. Lead finish/Ball material values may wrap to two lines if the finish value exceeds the maximum column width.

(5) **MSL rating/Peak reflow:** The moisture sensitivity level ratings and peak solder (reflow) temperatures. In the event that a part has multiple moisture sensitivity ratings, only the lowest level per JEDEC standards is shown. Refer to the shipping label for the actual reflow temperature that will be used to mount the part to the printed circuit board.

(6) **Part marking:** There may be an additional marking, which relates to the logo, the lot trace code information, or the environmental category of the part.

Multiple part markings will be inside parentheses. Only one part marking contained in parentheses and separated by a "~" will appear on a part. If a line is indented then it is a continuation of the previous line and the two combined represent the entire part marking for that device.

Important Information and Disclaimer: The information provided on this page represents TI's knowledge and belief as of the date that it is provided. TI bases its knowledge and belief on information provided by third parties, and makes no representation or warranty as to the accuracy of such information. Efforts are underway to better integrate information from third parties. TI has taken and continues to take reasonable steps to provide representative and accurate information but may not have conducted destructive testing or chemical analysis on incoming materials and chemicals. TI and TI suppliers consider certain information to be proprietary, and thus CAS numbers and other limited information may not be available for release.

In no event shall TI's liability arising out of such information exceed the total purchase price of the TI part(s) at issue in this document sold by TI to Customer on an annual basis.

TAPE AND REEL INFORMATION

REEL DIMENSIONS

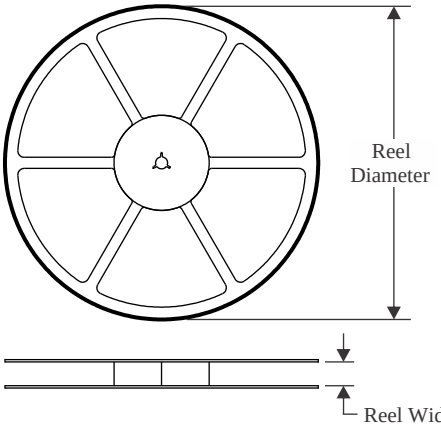

TAPE DIMENSIONS

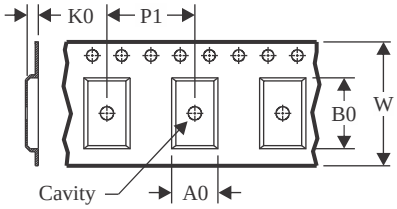

A0	Dimension designed to accommodate the component width
B0	Dimension designed to accommodate the component length
K0	Dimension designed to accommodate the component thickness
W	Overall width of the carrier tape
P1	Pitch between successive cavity centers

QUADRANT ASSIGNMENTS FOR PIN 1 ORIENTATION IN TAPE

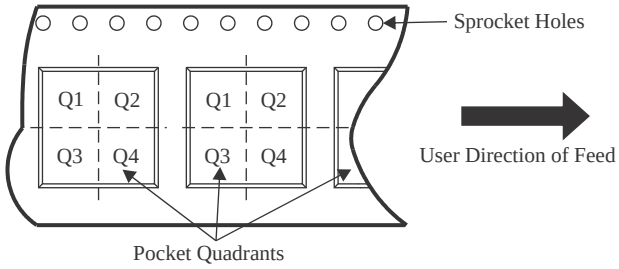

*All dimensions are nominal

Device	Package Type	Package Drawing	Pins	SPQ	Reel Diameter (mm)	Reel Width W1 (mm)	A0 (mm)	B0 (mm)	K0 (mm)	P1 (mm)	W (mm)	Pin1 Quadrant
BQ24707ARGRR	VQFN	RGR	20	3000	330.0	12.4	3.75	3.75	1.15	8.0	12.0	Q1
BQ24707ARGRR	VQFN	RGR	20	3000	330.0	12.4	3.8	3.8	1.1	8.0	12.0	Q1
BQ24707ARGRT	VQFN	RGR	20	250	180.0	12.4	3.75	3.75	1.15	8.0	12.0	Q1
BQ24707ARGRT	VQFN	RGR	20	250	180.0	12.5	3.8	3.8	1.1	8.0	12.0	Q1
BQ24707RGRR	VQFN	RGR	20	3000	330.0	12.4	3.8	3.8	1.1	8.0	12.0	Q1
BQ24707RGRR	VQFN	RGR	20	3000	330.0	12.4	3.75	3.75	1.15	8.0	12.0	Q1
BQ24707RGRT	VQFN	RGR	20	250	180.0	12.4	3.75	3.75	1.15	8.0	12.0	Q1
BQ24707RGRT	VQFN	RGR	20	250	180.0	12.5	3.8	3.8	1.1	8.0	12.0	Q1

TAPE AND REEL BOX DIMENSIONS

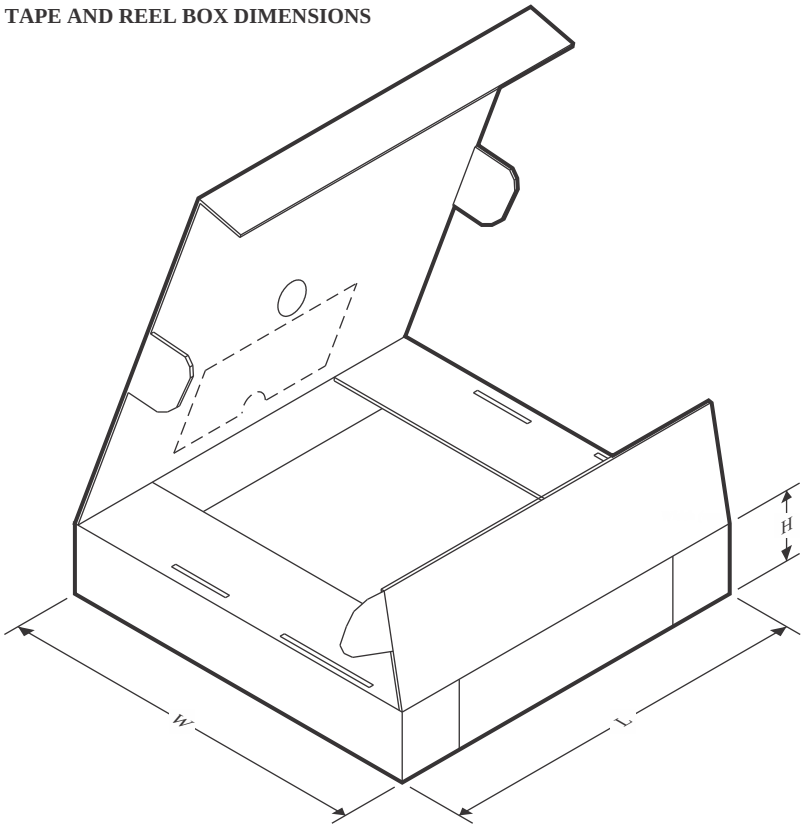

*All dimensions are nominal

Device	Package Type	Package Drawing	Pins	SPQ	Length (mm)	Width (mm)	Height (mm)
BQ24707ARGRR	VQFN	RGR	20	3000	552.0	346.0	36.0
BQ24707ARGRR	VQFN	RGR	20	3000	338.0	355.0	35.0
BQ24707ARGRT	VQFN	RGR	20	250	552.0	185.0	36.0
BQ24707ARGRT	VQFN	RGR	20	250	338.0	355.0	35.0
BQ24707RGRR	VQFN	RGR	20	3000	338.0	355.0	35.0
BQ24707RGRR	VQFN	RGR	20	3000	552.0	346.0	36.0
BQ24707RGRT	VQFN	RGR	20	250	552.0	185.0	36.0
BQ24707RGRT	VQFN	RGR	20	250	338.0	355.0	35.0

TUBE

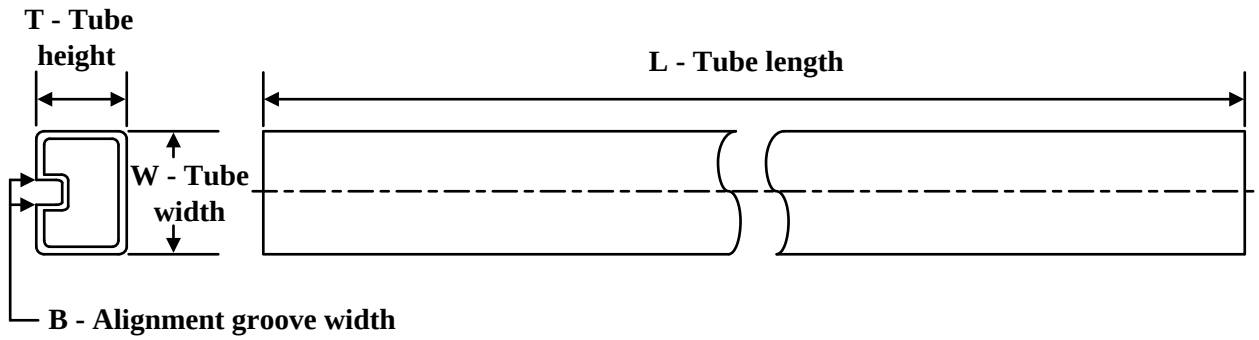

*All dimensions are nominal

Device	Package Name	Package Type	Pins	SPQ	L (mm)	W (mm)	T (µm)	B (mm)
BQ24707ARGRR	RGR	VQFN	20	3000	381.5	5	2250	0
BQ24707ARGRR.A	RGR	VQFN	20	3000	381.5	5	2250	0
BQ24707ARGRR.B	RGR	VQFN	20	3000	381.5	5	2250	0
BQ24707ARGRT	RGR	VQFN	20	250	381.5	5	2250	0
BQ24707ARGRT.A	RGR	VQFN	20	250	381.5	5	2250	0
BQ24707ARGRT.B	RGR	VQFN	20	250	381.5	5	2250	0
BQ24707RGRR	RGR	VQFN	20	3000	381.5	5	2250	0
BQ24707RGRR.A	RGR	VQFN	20	3000	381.5	5	2250	0
BQ24707RGRR.B	RGR	VQFN	20	3000	381.5	5	2250	0
BQ24707RGRT	RGR	VQFN	20	250	381.5	5	2250	0
BQ24707RGRT.A	RGR	VQFN	20	250	381.5	5	2250	0
BQ24707RGRT.B	RGR	VQFN	20	250	381.5	5	2250	0

GENERIC PACKAGE VIEW

RGR 20

VQFN - 1 mm max height

3.5 x 3.5, 0.5 mm pitch

PLASTIC QUAD FLATPACK - NO LEAD

This image is a representation of the package family, actual package may vary.
Refer to the product data sheet for package details.

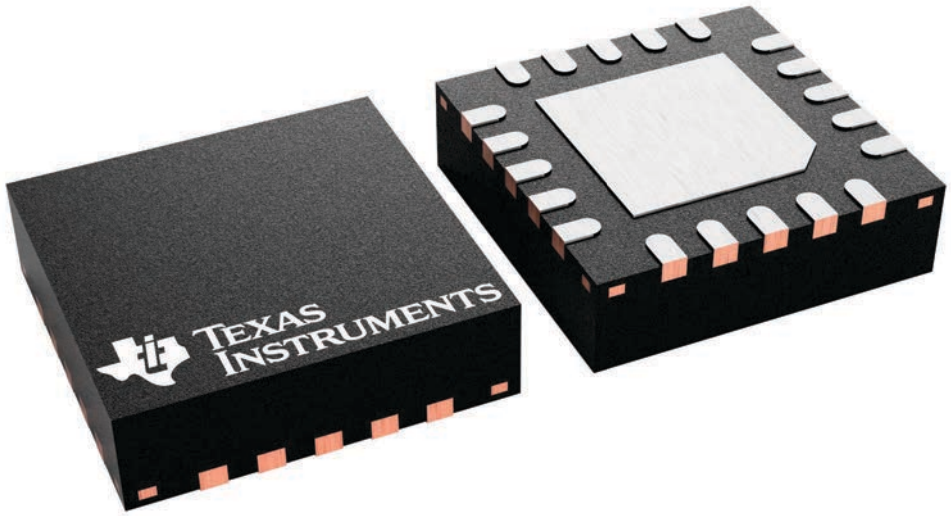

4228482/A

PACKAGE OUTLINE

RGR0020A

VQFN - 1 mm max height

PLASTIC QUAD FLATPACK - NO LEAD

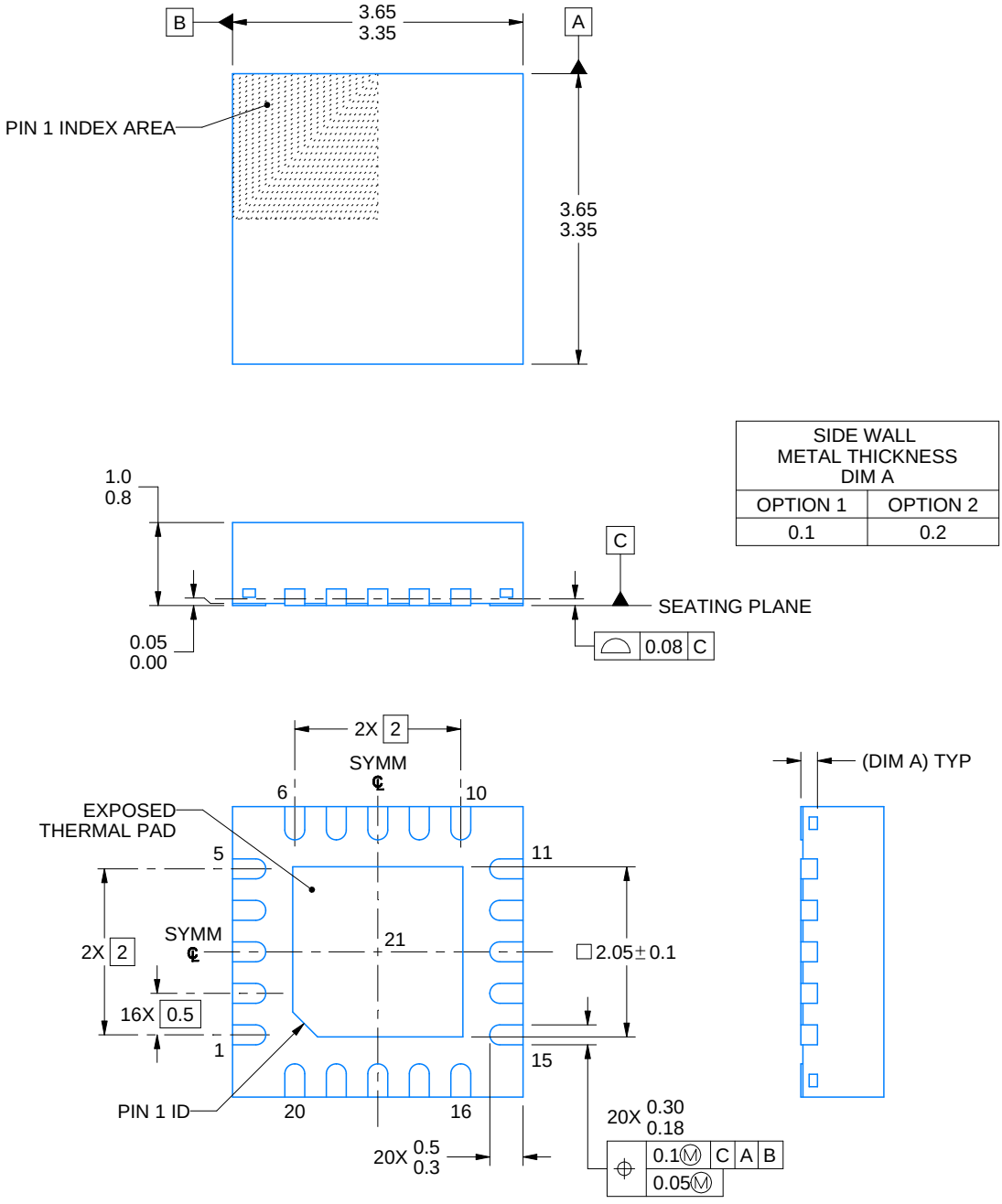

SIDE WALL METAL THICKNESS DIM A	
OPTION 1	OPTION 2
0.1	0.2

4219031/B 04/2022

NOTES:

1. All linear dimensions are in millimeters. Any dimensions in parenthesis are for reference only. Dimensioning and tolerancing per ASME Y14.5M.
2. This drawing is subject to change without notice.
3. The package thermal pad must be soldered to the printed circuit board for thermal and mechanical performance.

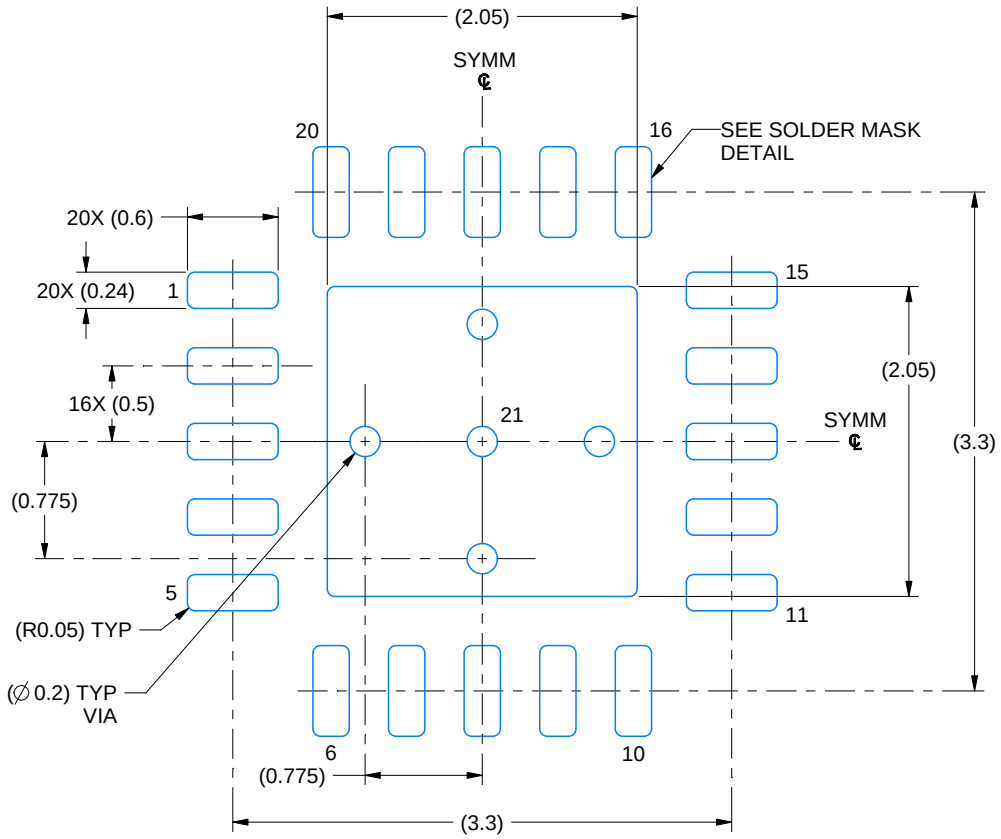

LAND PATTERN EXAMPLE
EXPOSED METAL SHOWN
SCALE: 20X

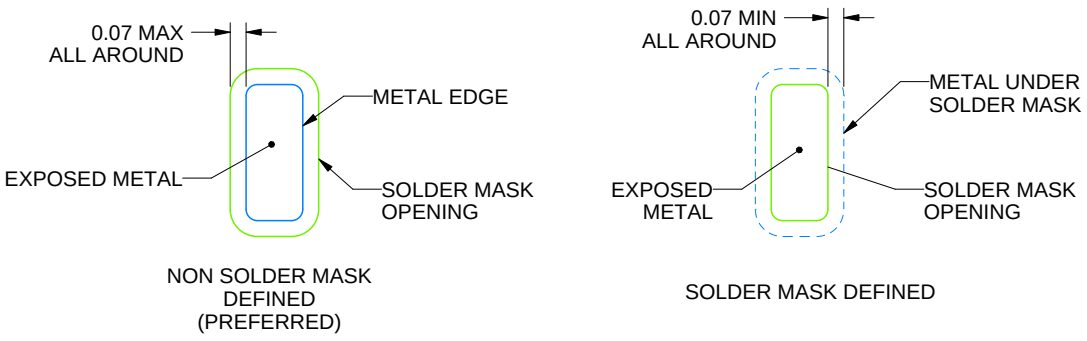

SOLDER MASK DETAILS

4219031/B 04/2022

NOTES: (continued)

4. This package is designed to be soldered to a thermal pad on the board. For more information, see Texas Instruments literature number SLUA271 (www.ti.com/lit/slua271).
5. Vias are optional depending on application, refer to device data sheet. If any vias are implemented, refer to their locations shown on this view. It is recommended that vias under paste be filled, plugged or tented.

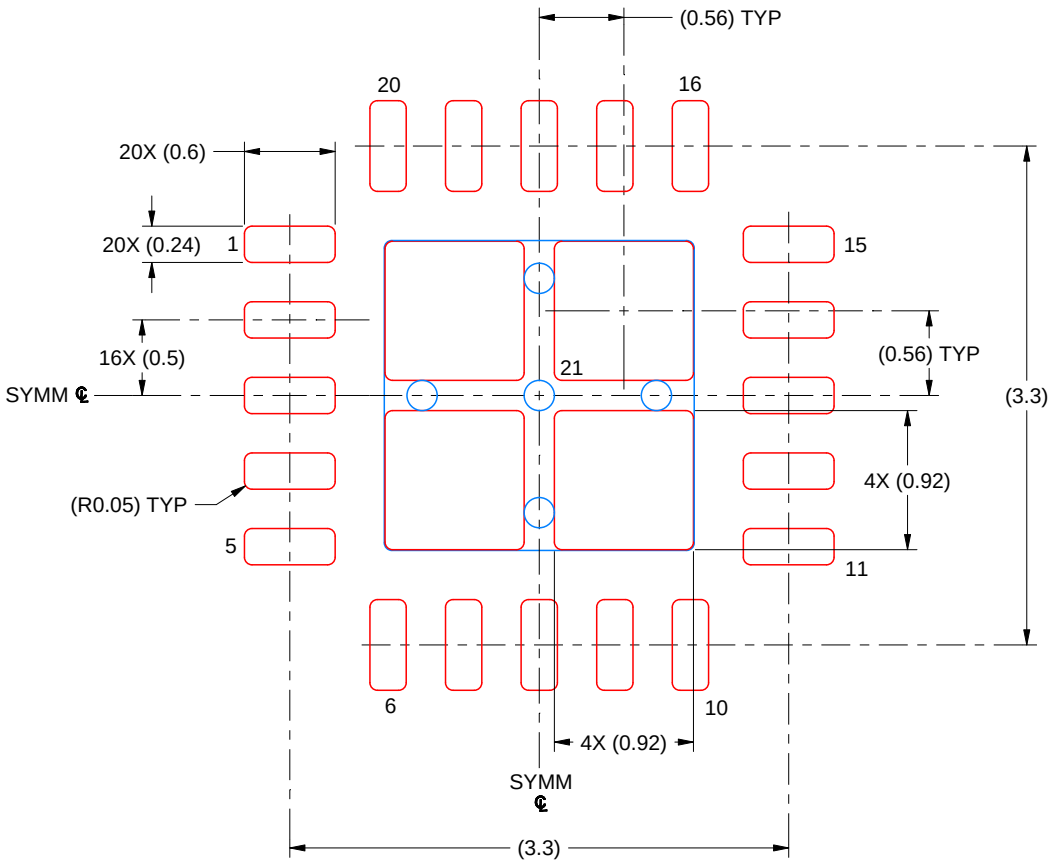

SOLDER PASTE EXAMPLE
BASED ON 0.125 MM THICK STENCIL
SCALE: 20X

EXPOSED PAD 21
81% PRINTED SOLDER COVERAGE BY AREA UNDER PACKAGE

4219031/B 04/2022

NOTES: (continued)

6. Laser cutting apertures with trapezoidal walls and rounded corners may offer better paste release. IPC-7525 may have alternate design recommendations.

IMPORTANT NOTICE AND DISCLAIMER

TI PROVIDES TECHNICAL AND RELIABILITY DATA (INCLUDING DATASHEETS), DESIGN RESOURCES (INCLUDING REFERENCE DESIGNS), APPLICATION OR OTHER DESIGN ADVICE, WEB TOOLS, SAFETY INFORMATION, AND OTHER RESOURCES “AS IS” AND WITH ALL FAULTS, AND DISCLAIMS ALL WARRANTIES, EXPRESS AND IMPLIED, INCLUDING WITHOUT LIMITATION ANY IMPLIED WARRANTIES OF MERCHANTABILITY, FITNESS FOR A PARTICULAR PURPOSE OR NON-INFRINGEMENT OF THIRD PARTY INTELLECTUAL PROPERTY RIGHTS.

These resources are intended for skilled developers designing with TI products. You are solely responsible for (1) selecting the appropriate TI products for your application, (2) designing, validating and testing your application, and (3) ensuring your application meets applicable standards, and any other safety, security, regulatory or other requirements.

These resources are subject to change without notice. TI grants you permission to use these resources only for development of an application that uses the TI products described in the resource. Other reproduction and display of these resources is prohibited. No license is granted to any other TI intellectual property right or to any third party intellectual property right. TI disclaims responsibility for, and you fully indemnify TI and its representatives against any claims, damages, costs, losses, and liabilities arising out of your use of these resources.

TI’s products are provided subject to TI’s Terms of Sale, TI’s General Quality Guidelines, or other applicable terms available either on ti.com or provided in conjunction with such TI products. TI’s provision of these resources does not expand or otherwise alter TI’s applicable warranties or warranty disclaimers for TI products. Unless TI explicitly designates a product as custom or customer-specified, TI products are standard, catalog, general purpose devices.

TI objects to and rejects any additional or different terms you may propose.

Copyright © 2026, Texas Instruments Incorporated

Last updated 10/2025

ENTEGRECİ

Bu belge www.entegreci.com üzerinden sunulmaktadır.

Elektronik komponent tedarikinde Entegreci

Entegreci, Eskişehir merkezli, Türkiye geneline satış yapan bir elektronik komponent mağazasıdır. Entegreler (IC), mikrodenetleyiciler, transistörler, diyotlar, pasif elemanlar, konnektörler, modüller ve geliştirme kartları tek adetten seri üretim adetlerine kadar satılır. Ürün sayfalarında güncel stok durumunu, fiyatı ve datasheet bağlantısını bulabilirsiniz.

Parça koduyla arama

Üretici parça numarasını yazın; stok ve fiyatı hemen görün.

www.entegreci.com

Ürün kategorileri

Entegreden kapasitöre tüm elektronik komponent kategorileri.

Kategorilere göz atın

Üreticiler

Aradığınız üreticinin ürünlerini tek sayfada inceleyin.

Üreticileri görün

Toplu alım ve teklif

Listede olmayan ya da yüksek adetli parçalar için teklif isteyin.

Teklif isteyin

www.entegreci.com | **destek@entegreci.com** | **0850 305 90 34**

Entegreci is an online electronic components store based in Türkiye. Search by manufacturer part number to see stock, prices and datasheets for integrated circuits, microcontrollers, transistors, passive components and connectors, or request a quote for parts that are not listed.

Bu sayfa Entegreci tarafından eklenmiştir. Belgenin önceki sayfaları asıl yayıncısına aittir ve içeriği değiştirilmemiştir; en güncel sürüm için belgenin yayıncısına başvurun.