

SLUS579 − OCTOBER, 2003

PROGRAMMABLE OUTPUT POWER FACTOR PREREGULATOR

FEATURES

- **Controls Boost Preregulator to Near-Unity Power Factor**
- **World Wide Line Operation**
- **Over-Voltage Protection**
- **Accurate Power Limiting**
- **Average Current Mode Control**
- **Improved Noise Immunity**
- **Improved Feed-Forward Line Regulation**
- **Leading Edge Modulation**
- **150-μA Typical Start-Up Current**
- **Low-Power BiCMOS Operation**
- **10.8-V to 17-V Operation**
- **Programmable Output Voltage (Tracking Boost Topology)**

DESCRIPTION

The UCC2819A/UCC3819A provides all the functions necessary for active power factor corrected preregulators. The controller achieves near unity power factor by shaping the ac-input line current waveform to correspond to that of the ac-input line voltage. Average current mode control maintains stable, low distortion sinusoidal line current.

Designed in Texas Instrument's BiCMOS process, the UCC3819A offers new features such as lower start-up current, lower power dissipation, overvoltage protection, a shunt UVLO detect circuitry and a leading-edge modulation technique to reduce ripple current in the bulk capacitor.

The UCC3819A allows the output voltage to be programmed by bringing out the error amplifier noninverting input.

BLOCK DIAGRAM

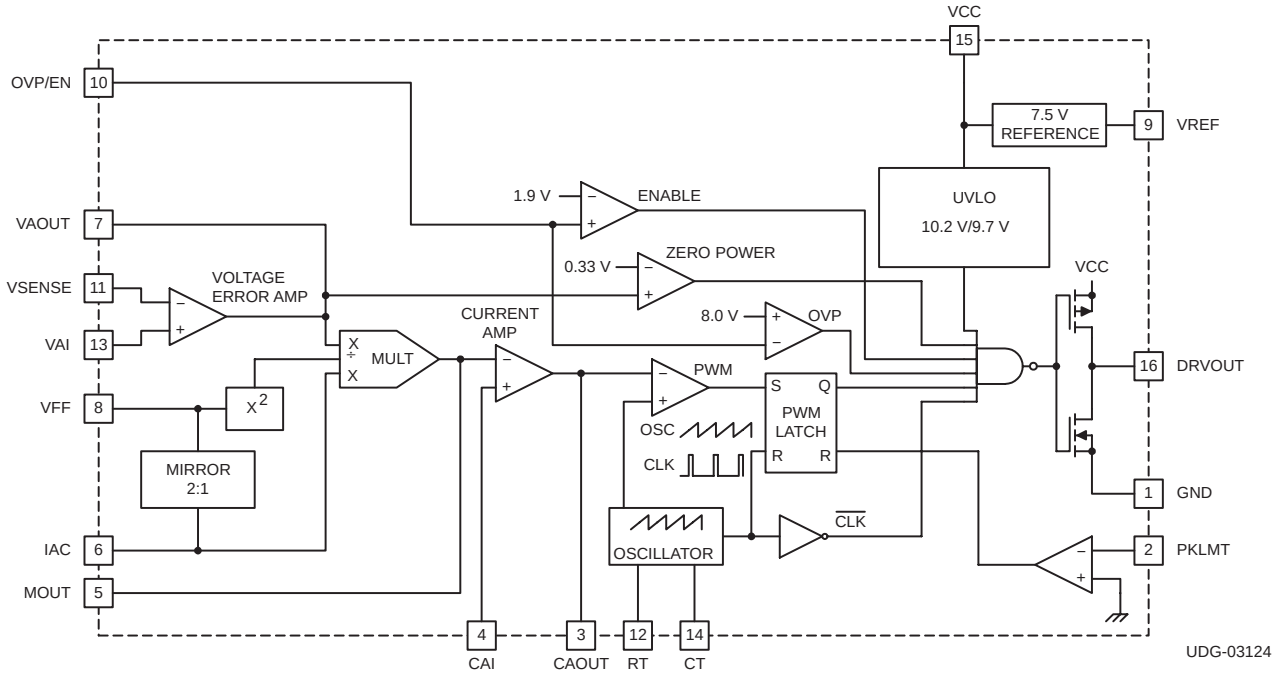

Please be aware that an important notice concerning availability, standard warranty, and use in critical applications of Texas Instruments semiconductor products and disclaimers thereto appears at the end of this data sheet.

PRODUCTION DATA information is current as of publication date. Products conform to specifications per the terms of Texas Instruments standard warranty. Production processing does not necessarily include testing of all parameters.

Copyright © 2003, Texas Instruments Incorporated

DESCRIPTION (CONTINUED)

The UCC3819A is directly pin for pin compatible with the UCC3819. Only the output stage of UCC3819A has been modified to allow use of a smaller external gate drive resistor values. For some power supply designs where an adequately high enough gate drive resistor can not be used, the UCC3819A offers a more robust output stage at the cost of increasing the internal gate resistances. The gate drive of the UCC3819A remains strong at ±1.2 A of peak current capability.

Available in the 16-pin D, N, and PW packages.

PIN CONNECTION DIAGRAM

D, N, AND PW PACKAGES
(TOP VIEW)

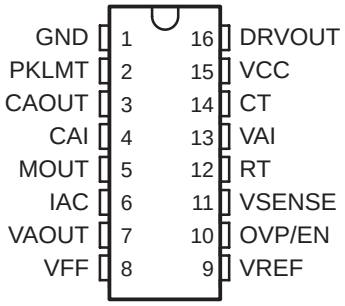

AVAILABLE OPTIONS TABLE

$T_A = T_J$	PACKAGE DEVICES		
	SOIC (D) PACKAGE(1)	PDIP (N) PACKAGE	TSSOP (PW) PACKAGE(1)
0°C to 70°C	UCC3819AD	UCC3819AN	UCC3819APW
−40°C to 85°C	UCC2819AD	UCC2819AN	UCC2819APW

NOTES: (1) The D and PW packages are available taped and reeled. Add R suffix to the device type (e.g. UCC3819ADR) to order quantities of 2,500 devices per reel (D package) and 2,000 devices per reel (for PW package). Bulk quantities are 40 units (D package) and 90 units (PW package) per tube.

THERMAL RESISTANCE TABLE

PACKAGE	θjc(°C/W)	θja(°C/W)
SOIC−16 (D)	22	40 to 70 (1)
PDIP−16 (N)	12	25 to 50 (1)
TSSOP−16 (PW)	14 (2)	123 to 147 (2)

NOTES: (1) Specified θja (junction to ambient) is for devices mounted to 5-inch^2 FR4 PC board with one ounce copper where noted. When resistance range is given, lower values are for 5 inch^2 aluminum PC board. Test PWB was 0.062 inch thick and typically used 0.635-mm trace widths for power packages and 1.3-mm trace widths for non-power packages with a 100-mil x 100-mil probe land area at the end of each trace.

(2) Modeled data. If value range given for θja, lower value is for 3x3 inch. 1 oz internal copper ground plane, higher value is for 1x1-inch. ground plane. All model data assumes only one trace for each non-fused lead.

ABSOLUTE MAXIMUM RATINGS

over operating free-air temperature (unless otherwise noted)†

	UCCx81xA	UNIT
Supply voltage VCC	18	V
Gate drive current, continuous	0.2	A
Gate drive current	1.2	
Input voltage, CAI, MOUT, SS	8	V
Input voltage, PKLMT	5	
Input voltage, VSENSE, OVP/EN, VAI	10	
Input current, RT, IAC, PKLMT	10	mA
Maximum negative voltage, DRVOUT, PKLMT, MOUT	−0.5	V
Power dissipation	1	W
Junction temperature, T_J	−55 to 150	°C
Storage temperature, T_{stg}	−65 to 150	
Lead temperature, T_{sol} (soldering, 10 seconds)	300	

† Stresses beyond those listed under “absolute maximum ratings” may cause permanent damage to the device. These are stress ratings only, and functional operation of the device at these or any other conditions beyond those indicated under recommended operating conditions is not implied. Exposure to absolute-maximum-rated conditions for extended periods may affect device reliability.

ELECTRICAL CHARACTERISTICS

T_A = 0°C to 70°C for the UCC3819A, −40°C to 85°C for the UCC2819A, VCC = 12 V, R_T = 22 kΩ, C_T = 270 pF, (unless otherwise noted)

PARAMETER	TEST CONDITIONS	MIN	TYP	MAX	UNITS
Supply Current					
Supply current, off	VCC = (VCC turnon threshold −0.3 V)		150	300	µA
Supply current, on	VCC = 12 V, No load on DRVOUT	2	4	6	mA
UVLO					
VCC turnon threshold		9.7	10.2	10.8	V
VCC turnoff threshold		9.4	9.7		
UVLO hysteresis		0.3	0.5		
Voltage Amplifier					
VIO	VAOUT = 2.75 V, VCM = 3.75 V	−15		15	mV
VAI bias current	VAOUT = 2.75 V, VCM = 3.75 V		50	200	nA
V_{SENSE} bias current	VSENSE = VREF, VAOUT = 2.5 V		50	200	
CMRR	VCM = 1 V to 7.5 V	50	70		dB
Open loop gain	VAOUT = 2 V to 5 V	50	90		
High-level output voltage	I_L = −150 µA	5.3	5.5	5.6	V
Low-level output voltage	I_L = 150 µA	0	50	150	mV

NOTES: 1. Ensured by design, Not production tested.
2. Reference variation for V_{CC} < 10.8 V is shown in Figure 2.

ELECTRICAL CHARACTERISTICS

T_A = 0°C to 70°C for the UCC3819A, −40°C to 85°C for the UCC2819A, VCC = 12 V, R_T = 22 kΩ, C_T = 270 pF, (unless otherwise noted)

PARAMETER	TEST CONDITIONS	MIN	TYP	MAX	UNITS
Over Voltage Protection and Enable					
Over voltage reference		VREF +0.48	VREF +0.50	VREF +0.52	V
Hysteresis		300	500	600	mV
Enable threshold		1.7	1.9	2.1	V
Enable hysteresis		0.1	0.2	0.3	
Current Amplifier					
Input offset voltage	V_{CM} = 0 V, V_{CAOUT} = 3 V	−3.5	0	2.5	mV
Input bias current	V_{CM} = 0 V, V_{CAOUT} = 3 V		−50	−100	nA
Input offset current	V_{CM} = 0 V, V_{CAOUT} = 3 V		25	100	
Open loop gain	V_{CM} = 0 V, V_{CAOUT} = 2 V to 5 V	90			dB
Common-mode rejection ratio	V_{CM} = 0 V to 1.5 V, V_{CAOUT} = 3 V	60	80		
High-level output voltage	I_L = −120 µA	5.6	6.5	6.8	V
Low-level output voltage	I_L = 1 mA	0.1	0.2	0.5	
Gain bandwidth product	See Note 1		2.5		MHz
Voltage Reference					
Input voltage, (UCC3819A)	T_A = 0°C to 70°C	7.387	7.5	7.613	V
Input voltage, (UCC2819A)	T_A = −40°C to 85°C	7.369	7.5	7.631	
Load regulation	I_{REF} = 1 mA to 2 mA	0		10	mV
Line regulation	VCC = 10.8 V to 15 V, See Note 2	0		10	
Short-circuit current	V_{REF} = 0 V	−20	−25	−50	mA
Oscillator					
Initial accuracy	T_A = 25°C	85	100	115	kHz
Voltage stability	VCC = 10.8 V to 15 V	−1%		1%	
Total variation	Line, temp, See Note 1	80		120	kHz
Ramp peak voltage		4.5	5	5.5	V
Ramp amplitude voltage (peak to peak)		3.5	4	4.5	
Peak Current Limit					
PKLMT reference voltage		−15		15	mV
PKLMT propagation delay		150	350	500	ns

NOTES: (1) Ensured by design, Not production tested.
(2) Reference variation for V_{CC} < 10.8 V is shown in Figure 2.

ELECTRICAL CHARACTERISTICS

T_A = 0°C to 70°C for the UCC3819A, −40°C to 85°C for the UCC2819A, VCC = 12 V, R_T = 22 kΩ, C_T = 270 pF, (unless otherwise noted)

PARAMETER	TEST CONDITIONS			MIN	TYP	MAX	UNITS
Multiplier							
I_{MOUT}, high line, low power output current, (0°C to 85°C)	I_{AC} = 500 µA,	V_{FF} = 4.7 V,	VAOUT = 1.25 V	0	−6	−20	µA
I_{MOUT}, high line, low power output current, (−40°C to 85°C)	I_{AC} = 500 µA,	V_{FF} = 4.7 V,	VAOUT = 1.25 V	0		−23	
I_{MOUT}, high line, high power output current	I_{AC} = 500 µA,	V_{FF} = 4.7 V,	VAOUT = 5 V	−70	−90	−105	
I_{MOUT}, low line, low power output current	I_{AC} = 150 µA,	V_{FF} = 1.4 V,	VAOUT = 1.25 V	−10	−19	−50	
I_{MOUT}, low line, high power output current	I_{AC} = 150 µA,	V_{FF} = 1.4 V,	VAOUT = 5 V	−268	−300	−346	
I_{MOUT}, IAC limited	I_{AC} = 150 µA,	V_{FF} = 1.3 V,	VAOUT = 5 V	−250	−300	−400	
Gain constant (K)	I_{AC} = 300 µA,	V_{FF} = 3 V,	VAOUT = 2.5 V	0.5	1	1.5	1/V
I_{MOUT}, zero current	I_{AC} = 150 µA,	V_{FF} = 1.4 V,	VAOUT = 0.25 V		0	−2	µA
	I_{AC} = 500 µA,	V_{FF} = 4.7 V,	VAOUT = 0.25 V		0	−2	
I_{MOUT}, zero current, (0°C to 85°C)	I_{AC} = 500 µA,	V_{FF} = 4.7 V,	VAOUT = 0.5 V		0	−3	
I_{MOUT}, zero current, (−40°C to 85°C)	I_{AC} = 500 µA,	V_{FF} = 4.7 V,	VAOUT = 0.5 V		0	−3.5	
Power limit (I_{MOUT} x V_{FF})	I_{AC} = 150 µA,	V_{FF} = 1.4 V,	VAOUT = 5 V	−375	−420	−485	µW
Feed-Forward							
VFF output current	I_{AC} = 300 µA			−140	−150	−160	µA
Gate Driver							
Pullup resistance	I_O = –100 mA to −200 mA				9	12	Ω
Pulldown resistance	I_O = 100 mA				4	10	
Output rise time	C_L = 1 nF,	R_L = 10 Ω,	V_{DRVOUT} = 0.7 V to 9 V		25	50	ns
Output fall time	C_L = 1 nF,	R_L = 10 Ω,	V_{DRVOUT} = 9 V to 0.7 V		10	50	
Maximum duty cycle				93%	95%	100%	
Minimum controlled duty cycle	At 100 kHz					2%	
Zero Power							
Zero power comparator threshold	Measured on VAOUT			0.20	0.33	0.50	V

NOTES: (1) Ensured by design, Not production tested.
(2) Reference variation for V_{CC} < 10.8 V is shown in Figure 2.

PIN ASSIGNMENTS

TERMINAL		I/O	DESCRIPTION
NAME	NO.		
CAI	4	I	Current amplifier noninverting input
CAOUT	3	O	Current amplifier output
CT	14	I	Oscillator timing capacitor
DRVOUT	16	O	Gate drive
GND	1	−	Ground
IAC	6	I	Current proportional to input voltage
MOUT	5	I/O	Multiplier output and current amplifier inverting input
OVP/EN	10	I	Over-voltage/enable
PKLMT	2	I	PFC peak current limit
RT	12	I	Oscillator charging current
VAI	13	I	Voltage amplifier non-inverting input
VAOUT	7	O	Voltage amplifier output
VCC	15	I	Positive supply voltage
VFF	8	I	Feed-forward voltage
VSENSE	11	I	Voltage amplifier inverting input
VREF	9	O	Voltage reference output

Pin Descriptions

CAI: Place a resistor between this pin and the GND side of current-sense resistor. This input and the inverting input (MOUT) remain functional down to and below GND.

CAOUT: This is the output of a wide bandwidth operational amplifier that senses line current and commands the PFC pulse-width modulator (PWM) to force the correct duty cycle. Compensation components are placed between CAOUT and MOUT.

CT: A capacitor from CT to GND sets the PWM oscillator frequency according to:

$$f \approx \left(\frac{0.6}{RT \times CT}\right)$$

The lead from the oscillator timing capacitor to GND should be as short and direct as possible.

DRVOUT: The output drive for the boost switch is a totem-pole MOSFET gate driver on DRVOUT. To avoid the excessive overshoot of the DRVOUT while driving a capacitive load, a series gate current-limiting/damping resistor is recommended to prevent interaction between the gate impedance and the output driver. The value of the series gate resistor is based on the pulldown resistance ($R_{pulldown}$ which is 4-Ω typical), the maximum VCC voltage (VCC), and the required maximum gate drive current (Imax). Using the equation below, a series gate resistance of resistance 11 Ω would be required for a maximum VCC voltage of 18 V and for 1.2 A of maximum sink current. The source current will be limited to approximately 900 mA (based on the R_{pullup} of 9-Ω typical).

$$R_{GATE} = \frac{VCC - \left(I_{MAX} \times R_{pulldown}\right)}{I_{MAX}}$$

GND: All voltages measured with respect to ground. VCC and REF should be bypassed directly to GND with a 0.1-µF or larger ceramic capacitor.

Pin Descriptions (continued)

IAC: This input to the analog multiplier is a current proportional to instantaneous line voltage. The multiplier is tailored for very low distortion from this current input (I_{IAC}) to multiplier output. The recommended maximum I_{IAC} is 500 µA.

MOUT: The output of the analog multiplier and the inverting input of the current amplifier are connected together at MOUT. As the multiplier output is a current, this is a high-impedance input so the amplifier can be configured as a differential amplifier. This configuration improves noise immunity and allows for the leading-edge modulation operation. The multiplier output current is limited to $\left(2 \times I_{IAC}\right)$. The multiplier output current is given by the equation:

$$I_{MOUT} = \frac{I_{IAC} \times (V_{VAOUT} - 1)}{V_{VFF}^{2} \times K}$$

where $K = \frac{1}{V}$ is the multiplier gain constant.

OVP/EN: A window comparator input that disables the output driver if the boost output voltage is a programmed level above the nominal or disables both the PFC output driver and resets SS if pulled below 1.9 V (typ).

PKLMT: The threshold for peak limit is 0 V. Use a resistor divider from the negative side of the current sense resistor to VREF to level shift this signal to a voltage level defined by the value of the sense resistor and the peak current limit. Peak current limit is reached when PKLMT voltage falls below 0 V.

RT: A resistor from RT to GND is used to program oscillator charging current. A resistor between 10 kΩ and 100 kΩ is recommended. Nominal voltage on this pin is 3 V.

VAI: This input can be tied to the VREF or any other voltage reference (≤7.5 V) to set the boost regulator output voltage.

VAOUT: This is the output of the operational amplifier that regulates output voltage. The voltage amplifier output is internally limited to approximately 5.5 V to prevent overshoot.

VCC: Connect to a stable source of at least 20 mA between 10 V and 17 V for normal operation. Bypass VCC directly to GND to absorb supply current spikes required to charge external MOSFET gate capacitances. To prevent inadequate gate drive signals, the output devices are inhibited unless V_{VCC} exceeds the upper under-voltage lockout voltage threshold and remains above the lower threshold.

VFF: The RMS voltage signal generated at this pin by mirroring 1/2 of the I_{IAC} into a single pole external filter. At low line, the VFF roll should be 14 V.

VSENSE: This is normally connected to a compensation network and to the boost converter output through a divider network.

VREF: VREF is the output of an accurate 7.5-V voltage reference. This output is capable of delivering 20 mA to peripheral circuitry and is internally short-circuit current limited. VREF is disabled and remains at 0 V when V_{VCC} is below the UVLO threshold. Bypass VREF to GND with a 0.1-µF or larger ceramic capacitor for best stability. Please refer to Figures 8 and 9 for VREF line and load regulation characteristics.

APPLICATION INFORMATION

The UCC3819A is based on the UCC3818 PFC preregulator. For a more detailed application information for this part, please refer to the UCC3818 datasheet product folder.

The main difference between the UCC3818 and the UCC3819A is that the non-inverting input of the voltage error amplifier is made available to the user through an external pin (VAI) in the UCC3819A. The SS pin and function were eliminated to accommodate this change.

The benefit of VAI pin is that it can be used to dynamically change the PFC output voltage based on the line voltage (RMS) level or other conditions. Figure 1 shows one suggested implementation of the tracking boost PFC converter as this approach is sometimes referred to. The VAI pin is tied to the VFF pin and hence output voltage scales up with the line voltage. The benefit of this approach is that at lower line voltages the output voltage is lower and that leads to smaller boost inductor value, lower MOSFET conduction losses and reduced component stresses. In order for this feature to work, the downstream converter has to operate over a wider input range.

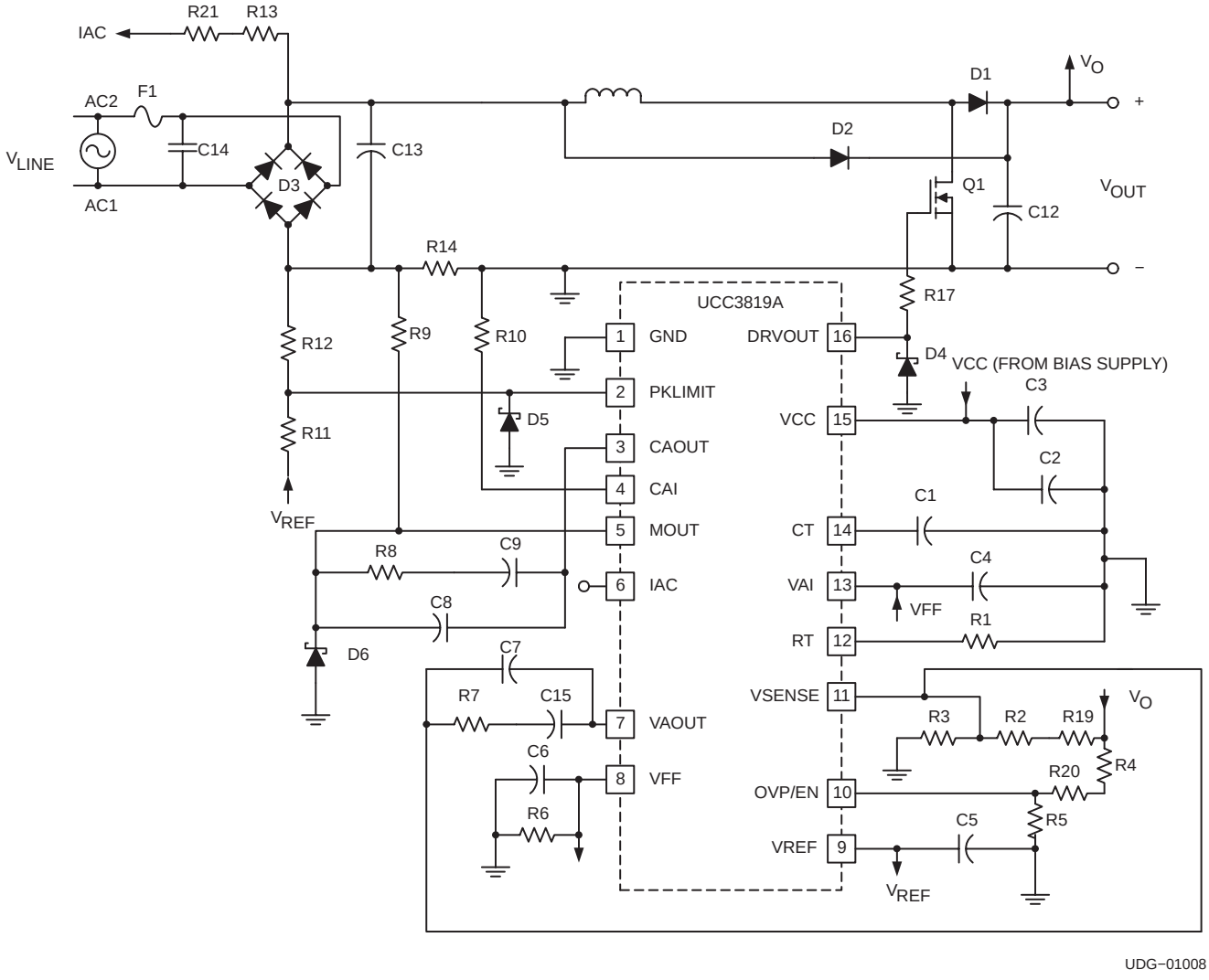

UDG−01008

Figure 1. Suggested Implementation of UCC3819A in a Tracking Boost PFC Preregulator

APPLICATION INFORMATION

REFERENCE VOLTAGE
vs
SUPPLY VOLTAGE

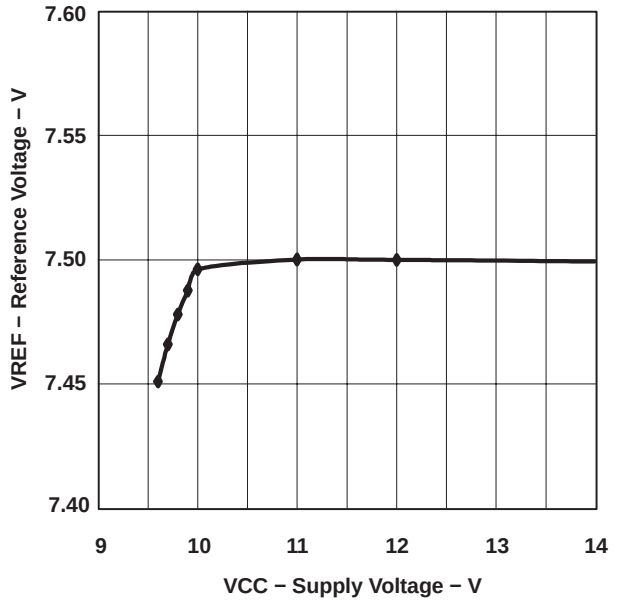

Figure 2

REFERENCE VOLTAGE
vs
REFERENCE CURRENT

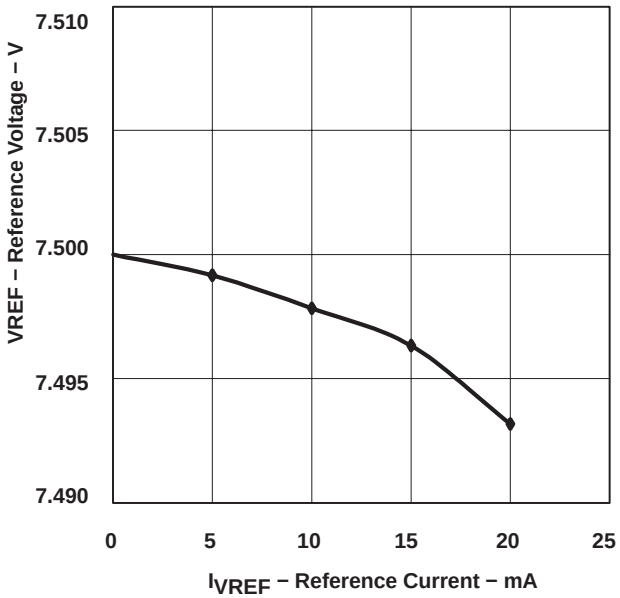

Figure 3

MULTIPLIER OUTPUT CURRENT
vs
VOLTAGE ERROR AMPLIFIER OUTPUT

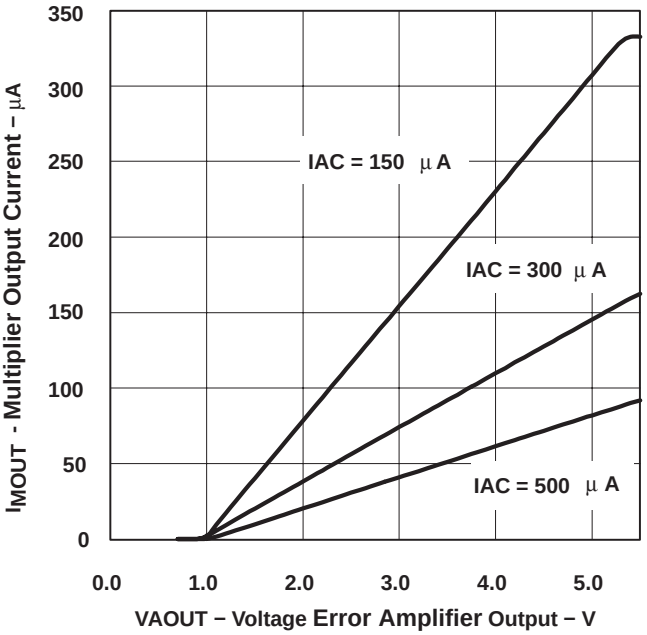

Figure 4

MULTIPLIER GAIN
vs
VOLTAGE ERROR AMPLIFIER OUTPUT

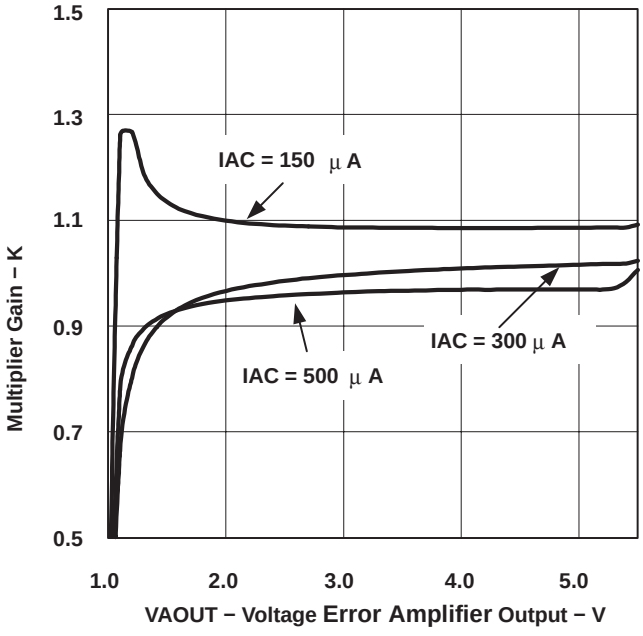

Figure 5

APPLICATION INFORMATION

MULTIPLIER CONSTANT POWER PERFORMANCE

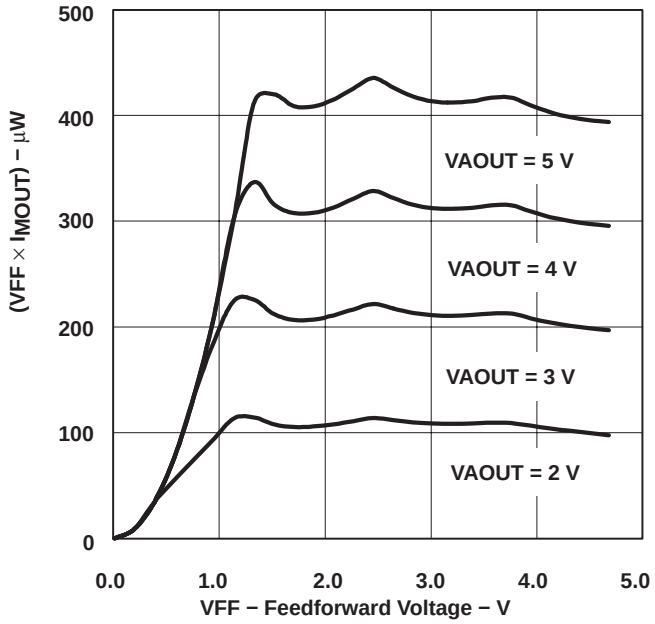

Figure 6

References and Resources:

Application Note: *Differences Between UCC3817A/18A/19A and UCC3817/18/19*, Texas Instruments Literature Number SLUA294

User's Guide: *UCC3817 BiCMOS Power Factor Preregulator Evaluation Board*, Texas Instruments Literature Number SLUU077

Application Note: *Synchronizing a PFC Controller from a Down Stream Controller Gate Drive*, Texas Instruments Literature Number SLUA245

Seminar topic: *High Power Factor Switching Preregulator Design Optimization*, L.H. Dixon, SEM−700,1990.

Seminar topic: *High Power Factor Preregulator for Off−line Supplie*", L.H. Dixon, SEM−600, 1988.

Related Products

DEVICE	DESCRIPTION	CONTROL METHOD	TYPICAL POWER LEVEL
UCC3817/A,18/A	BiCMOS PFC controller	ACM(2)	75 W to 2 kW+
UC3854	PFC controller	ACM(2)	200 W to 2 kW+
UC3854A/B	Improved PFC controller	ACM(2)	200 W to 2 kW+
UC3855A/B	High performance soft switching PFC controller	ACM(2)	400 W to 2 kW+
UCC38050/1	Transition mode PFC controller	CRM(1)	50 W to 400 W
UCC28510/11/12/13	Advanced PFC+PWM combo controller	ACM(2)	75 W to 1kW+
UCC28514/15/16/17	Advanced PFC+PWM combo controller	ACM(2)	75 W to 1kW+

NOTES: (1). Critical conduction mode
(2). Average current mode

PACKAGING INFORMATION

Orderable part number	Status (1)	Material type (2)	Package | Pins	Package qty | Carrier	RoHS (3)	Lead finish/ Ball material (4)	MSL rating/ Peak reflow (5)	Op temp (°C)	Part marking (6)
UCC2819AD	NRND	Production	SOIC (D) | 16	40 | TUBE	Yes	NIPDAU	Level-1-260C-UNLIM	-40 to 85	UCC2819AD
UCC2819AD.A	NRND	Production	SOIC (D) | 16	40 | TUBE	Yes	NIPDAU	Level-1-260C-UNLIM	-40 to 85	UCC2819AD
UCC2819ADR	NRND	Production	SOIC (D) | 16	2500 | LARGE T&R	Yes	NIPDAU	Level-1-260C-UNLIM	-40 to 85	UCC2819AD
UCC2819ADR.A	NRND	Production	SOIC (D) | 16	2500 | LARGE T&R	Yes	NIPDAU	Level-1-260C-UNLIM	-40 to 85	UCC2819AD
UCC2819APW	Active	Production	TSSOP (PW) | 16	90 | TUBE	Yes	NIPDAU	Level-2-260C-1 YEAR	-40 to 85	2819A
UCC2819APW.A	Active	Production	TSSOP (PW) | 16	90 | TUBE	Yes	NIPDAU	Level-2-260C-1 YEAR	-40 to 85	2819A
UCC2819APWR	Active	Production	TSSOP (PW) | 16	2000 | LARGE T&R	Yes	NIPDAU	Level-2-260C-1 YEAR	-40 to 85	2819A
UCC2819APWR.A	Active	Production	TSSOP (PW) | 16	2000 | LARGE T&R	Yes	NIPDAU	Level-2-260C-1 YEAR	-40 to 85	2819A
UCC3819AD	NRND	Production	SOIC (D) | 16	40 | TUBE	Yes	NIPDAU	Level-1-260C-UNLIM	0 to 70	UCC3819AD
UCC3819AD.A	NRND	Production	SOIC (D) | 16	40 | TUBE	Yes	NIPDAU	Level-1-260C-UNLIM	0 to 70	UCC3819AD

(1) **Status:** For more details on status, see our product life cycle.

(2) **Material type:** When designated, preproduction parts are prototypes/experimental devices, and are not yet approved or released for full production. Testing and final process, including without limitation quality assurance, reliability performance testing, and/or process qualification, may not yet be complete, and this item is subject to further changes or possible discontinuation. If available for ordering, purchases will be subject to an additional waiver at checkout, and are intended for early internal evaluation purposes only. These items are sold without warranties of any kind.

(3) **RoHS values:** Yes, No, RoHS Exempt. See the TI RoHS Statement for additional information and value definition.

(4) **Lead finish/Ball material:** Parts may have multiple material finish options. Finish options are separated by a vertical ruled line. Lead finish/Ball material values may wrap to two lines if the finish value exceeds the maximum column width.

(5) **MSL rating/Peak reflow:** The moisture sensitivity level ratings and peak solder (reflow) temperatures. In the event that a part has multiple moisture sensitivity ratings, only the lowest level per JEDEC standards is shown. Refer to the shipping label for the actual reflow temperature that will be used to mount the part to the printed circuit board.

(6) **Part marking:** There may be an additional marking, which relates to the logo, the lot trace code information, or the environmental category of the part.

Multiple part markings will be inside parentheses. Only one part marking contained in parentheses and separated by a "~" will appear on a part. If a line is indented then it is a continuation of the previous line and the two combined represent the entire part marking for that device.

Important Information and Disclaimer: The information provided on this page represents TI's knowledge and belief as of the date that it is provided. TI bases its knowledge and belief on information provided by third parties, and makes no representation or warranty as to the accuracy of such information. Efforts are underway to better integrate information from third parties. TI has taken and continues to take reasonable steps to provide representative

and accurate information but may not have conducted destructive testing or chemical analysis on incoming materials and chemicals. TI and TI suppliers consider certain information to be proprietary, and thus CAS numbers and other limited information may not be available for release.

In no event shall TI's liability arising out of such information exceed the total purchase price of the TI part(s) at issue in this document sold by TI to Customer on an annual basis.

TAPE AND REEL INFORMATION

REEL DIMENSIONS

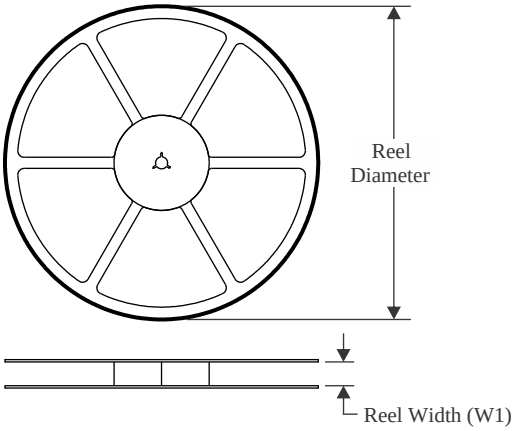

TAPE DIMENSIONS

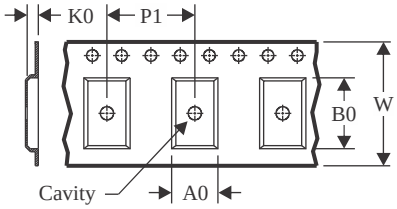

A0	Dimension designed to accommodate the component width
B0	Dimension designed to accommodate the component length
K0	Dimension designed to accommodate the component thickness
W	Overall width of the carrier tape
P1	Pitch between successive cavity centers

QUADRANT ASSIGNMENTS FOR PIN 1 ORIENTATION IN TAPE

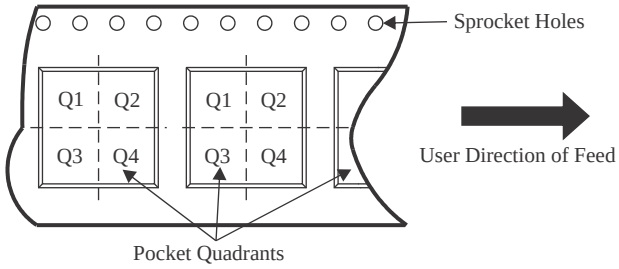

*All dimensions are nominal

Device	Package Type	Package Drawing	Pins	SPQ	Reel Diameter (mm)	Reel Width W1 (mm)	A0 (mm)	B0 (mm)	K0 (mm)	P1 (mm)	W (mm)	Pin1 Quadrant
UCC2819ADR	SOIC	D	16	2500	330.0	16.4	6.5	10.3	2.1	8.0	16.0	Q1
UCC2819APWR	TSSOP	PW	16	2000	330.0	12.4	6.9	5.6	1.6	8.0	12.0	Q1

TAPE AND REEL BOX DIMENSIONS

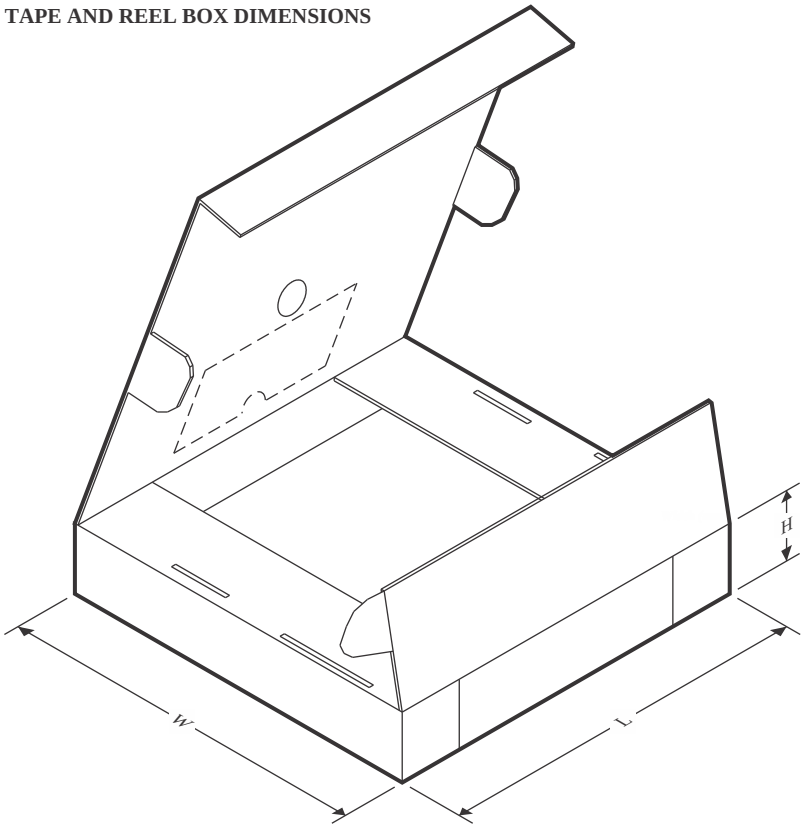

*All dimensions are nominal

Device	Package Type	Package Drawing	Pins	SPQ	Length (mm)	Width (mm)	Height (mm)
UCC2819ADR	SOIC	D	16	2500	353.0	353.0	32.0
UCC2819APWR	TSSOP	PW	16	2000	353.0	353.0	32.0

TUBE

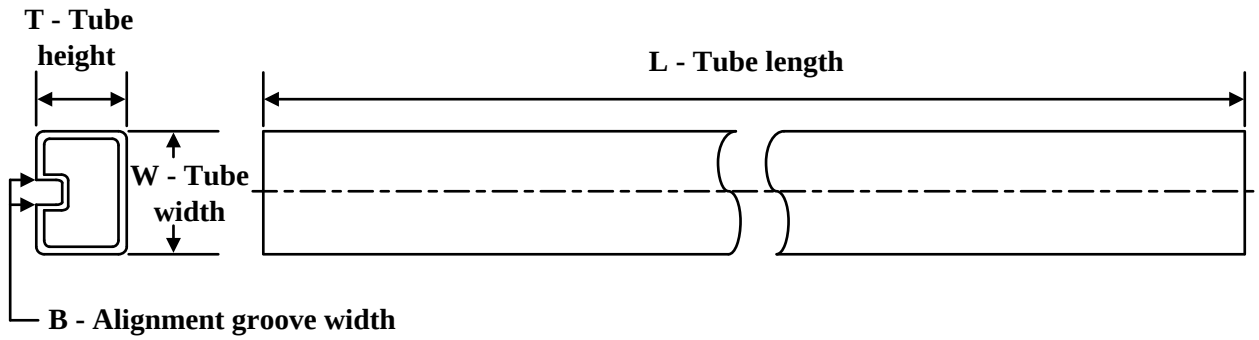

*All dimensions are nominal

Device	Package Name	Package Type	Pins	SPQ	L (mm)	W (mm)	T (µm)	B (mm)
UCC2819AD	D	SOIC	16	40	507	8	3940	4.32
UCC2819AD.A	D	SOIC	16	40	507	8	3940	4.32
UCC2819APW	PW	TSSOP	16	90	508	8.5	3250	2.8
UCC2819APW.A	PW	TSSOP	16	90	508	8.5	3250	2.8
UCC3819AD	D	SOIC	16	40	507	8	3940	4.32
UCC3819AD.A	D	SOIC	16	40	507	8	3940	4.32

D (R–PDSO–G16) PLASTIC SMALL OUTLINE

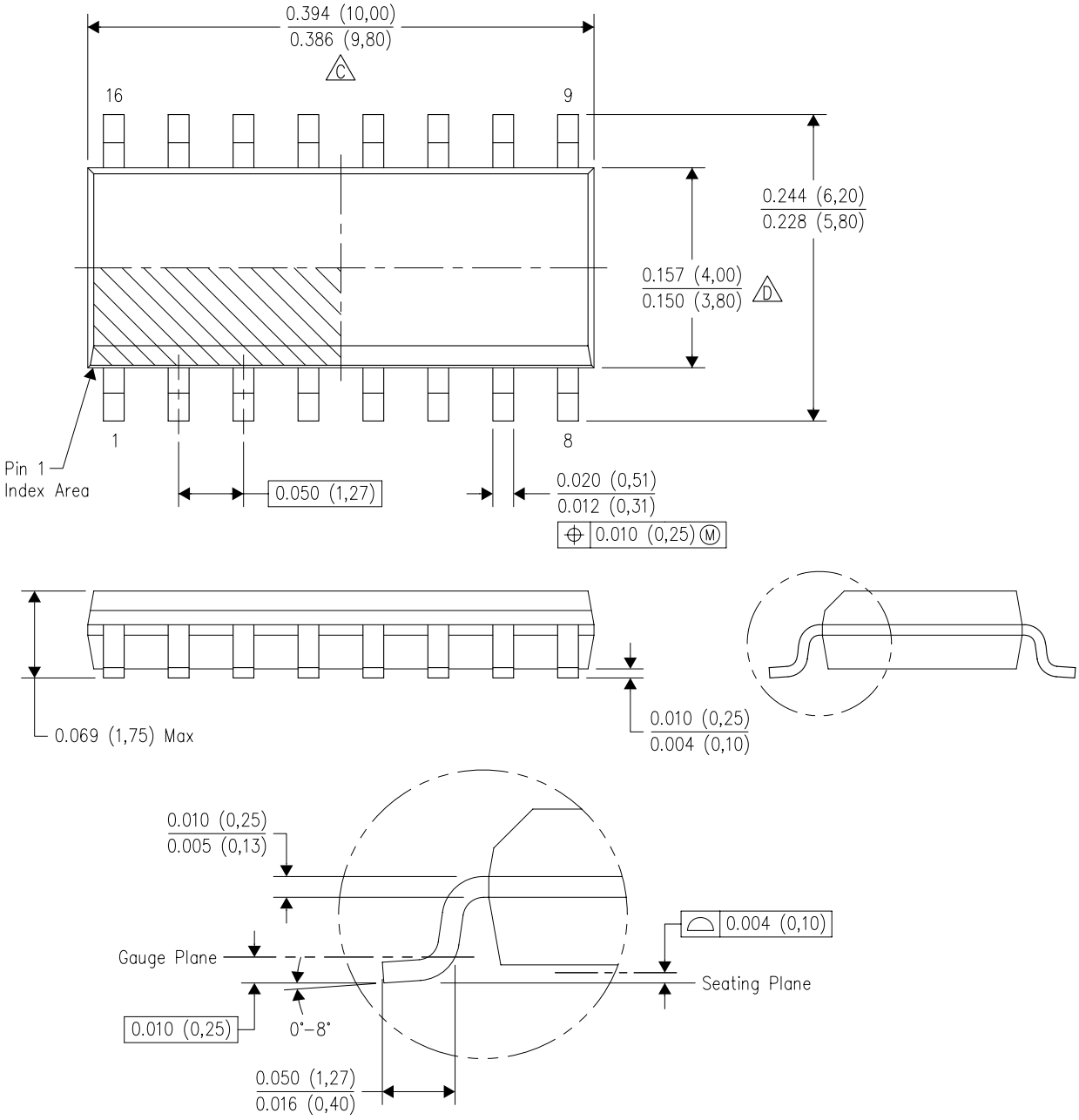

NOTES:
A. All linear dimensions are in inches (millimeters).
B. This drawing is subject to change without notice.
C. Body length does not include mold flash, protrusions, or gate burrs. Mold flash, protrusions, or gate burrs shall not exceed 0.006 (0,15) each side.
D. Body width does not include interlead flash. Interlead flash shall not exceed 0.017 (0,43) each side.
E. Reference JEDEC MS–012 variation AC.

PACKAGE OUTLINE

PW0016A

TSSOP - 1.2 mm max height

SMALL OUTLINE PACKAGE

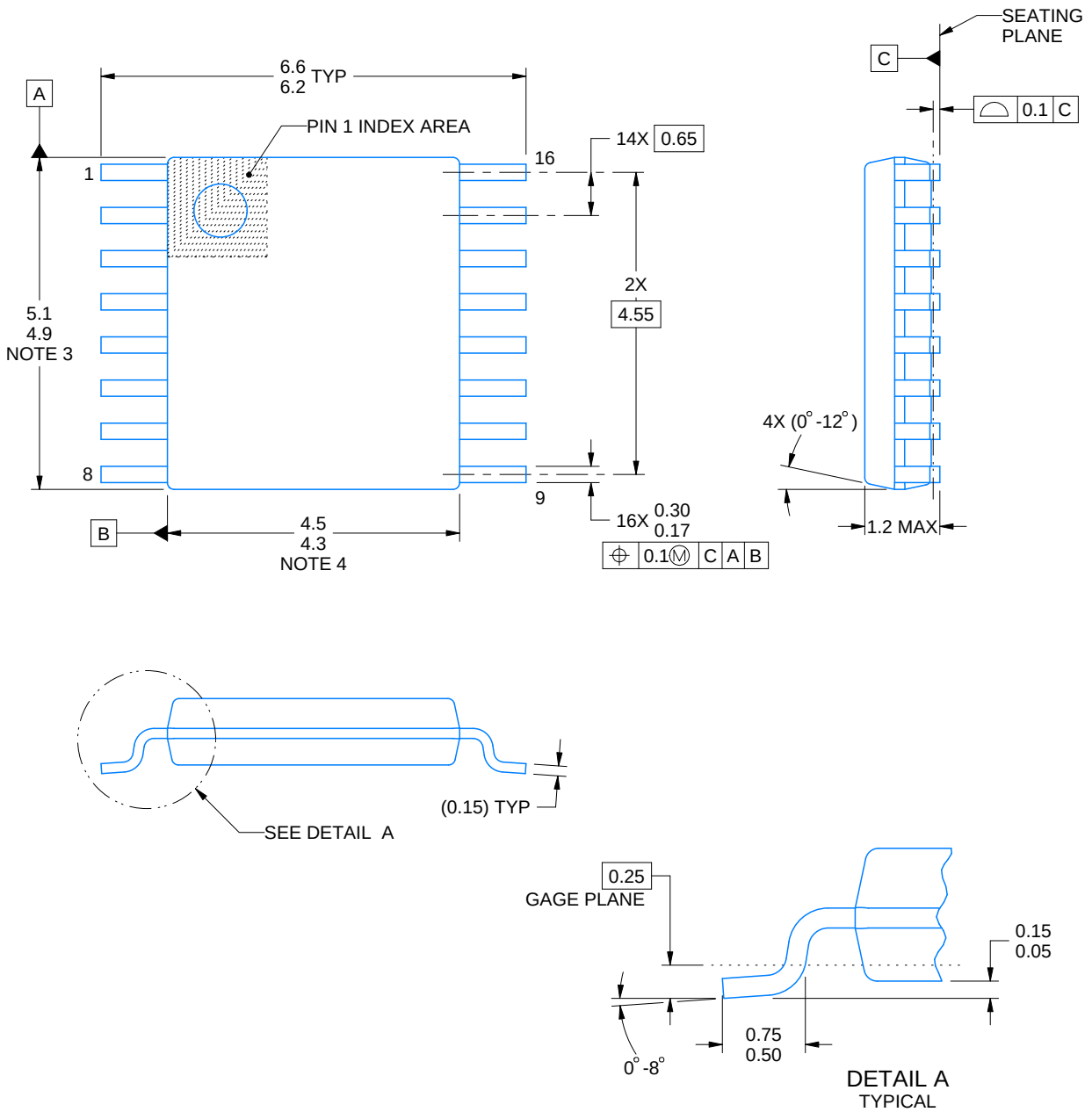

NOTES:

1. All linear dimensions are in millimeters. Any dimensions in parenthesis are for reference only. Dimensioning and tolerancing per ASME Y14.5M.
2. This drawing is subject to change without notice.
3. This dimension does not include mold flash, protrusions, or gate burrs. Mold flash, protrusions, or gate burrs shall not exceed 0.15 mm per side.
4. This dimension does not include interlead flash. Interlead flash shall not exceed 0.25 mm per side.
5. Reference JEDEC registration MO-153.

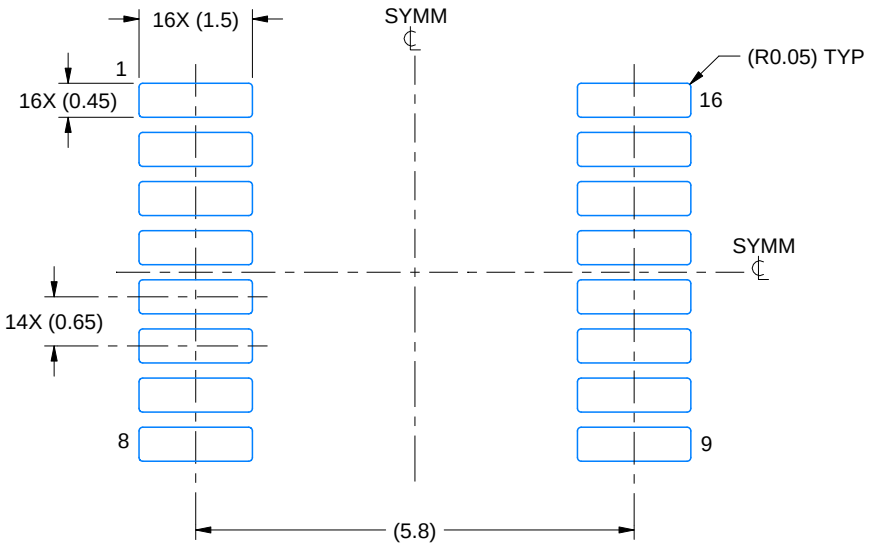

LAND PATTERN EXAMPLE
EXPOSED METAL SHOWN
SCALE: 10X



SOLDER MASK DETAILS

4220204/B 12/2023

NOTES: (continued)

6. Publication IPC-7351 may have alternate designs.
7. Solder mask tolerances between and around signal pads can vary based on board fabrication site.

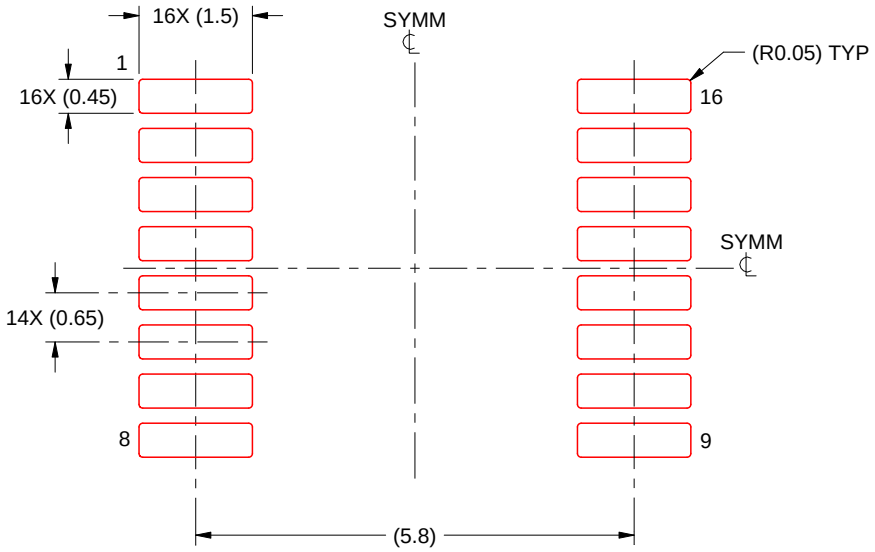

SOLDER PASTE EXAMPLE
BASED ON 0.125 mm THICK STENCIL
SCALE: 10X

4220204/B 12/2023

NOTES: (continued)

8. Laser cutting apertures with trapezoidal walls and rounded corners may offer better paste release. IPC-7525 may have alternate design recommendations.
9. Board assembly site may have different recommendations for stencil design.

N (R–PDIP–T**)

PLASTIC DUAL–IN–LINE PACKAGE

16 PINS SHOWN

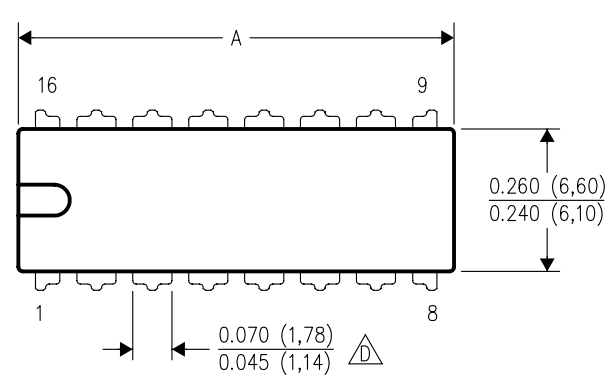

DIM \ PINS **	14	16	18	20
A MAX	0.775 (19,69)	0.775 (19,69)	0.920 (23,37)	1.060 (26,92)
A MIN	0.745 (18,92)	0.745 (18,92)	0.850 (21,59)	0.940 (23,88)
MS–001 VARIATION (C)	AA	BB	AC	AD

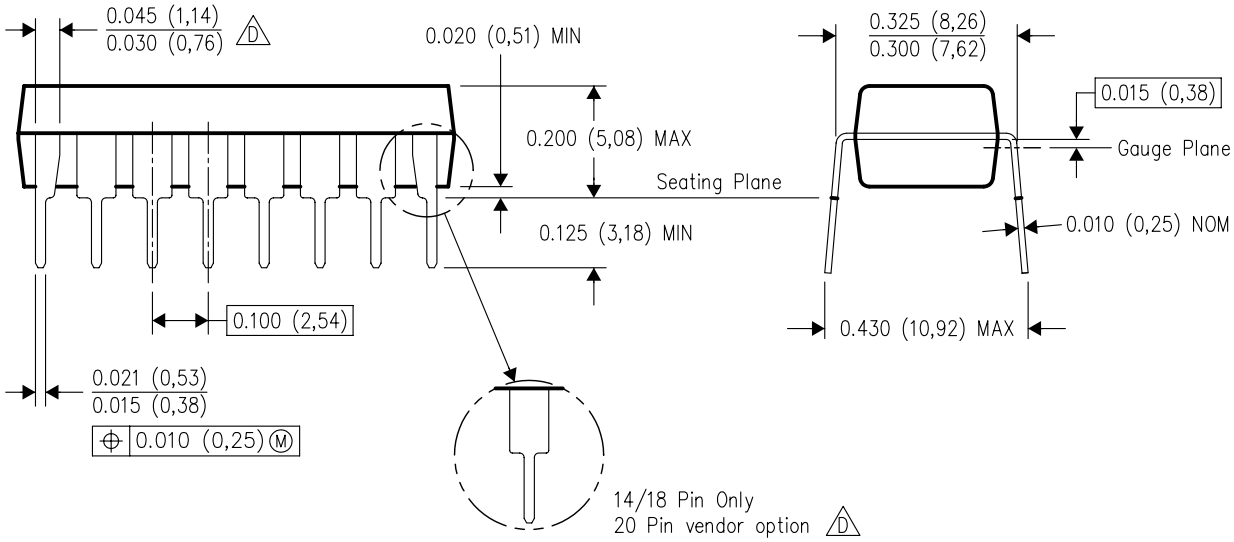

4040049/E 12/2002

NOTES:
A. All linear dimensions are in inches (millimeters).
B. This drawing is subject to change without notice.
C. Falls within JEDEC MS–001, except 18 and 20 pin minimum body length (Dim A).
D. The 20 pin end lead shoulder width is a vendor option, either half or full width.

IMPORTANT NOTICE AND DISCLAIMER

TI PROVIDES TECHNICAL AND RELIABILITY DATA (INCLUDING DATASHEETS), DESIGN RESOURCES (INCLUDING REFERENCE DESIGNS), APPLICATION OR OTHER DESIGN ADVICE, WEB TOOLS, SAFETY INFORMATION, AND OTHER RESOURCES “AS IS” AND WITH ALL FAULTS, AND DISCLAIMS ALL WARRANTIES, EXPRESS AND IMPLIED, INCLUDING WITHOUT LIMITATION ANY IMPLIED WARRANTIES OF MERCHANTABILITY, FITNESS FOR A PARTICULAR PURPOSE OR NON-INFRINGEMENT OF THIRD PARTY INTELLECTUAL PROPERTY RIGHTS.

These resources are intended for skilled developers designing with TI products. You are solely responsible for (1) selecting the appropriate TI products for your application, (2) designing, validating and testing your application, and (3) ensuring your application meets applicable standards, and any other safety, security, regulatory or other requirements.

These resources are subject to change without notice. TI grants you permission to use these resources only for development of an application that uses the TI products described in the resource. Other reproduction and display of these resources is prohibited. No license is granted to any other TI intellectual property right or to any third party intellectual property right. TI disclaims responsibility for, and you fully indemnify TI and its representatives against any claims, damages, costs, losses, and liabilities arising out of your use of these resources.

TI’s products are provided subject to TI’s Terms of Sale, TI’s General Quality Guidelines, or other applicable terms available either on ti.com or provided in conjunction with such TI products. TI’s provision of these resources does not expand or otherwise alter TI’s applicable warranties or warranty disclaimers for TI products. Unless TI explicitly designates a product as custom or customer-specified, TI products are standard, catalog, general purpose devices.

TI objects to and rejects any additional or different terms you may propose.

Copyright © 2026, Texas Instruments Incorporated

Last updated 10/2025

ENTEGRECİ

Bu belge www.entegreci.com üzerinden sunulmaktadır.

Elektronik komponent tedarikinde Entegreci

Entegreci, Eskişehir merkezli, Türkiye geneline satış yapan bir elektronik komponent mağazasıdır. Entegreler (IC), mikrodenetleyiciler, transistörler, diyotlar, pasif elemanlar, konnektörler, modüller ve geliştirme kartları tek adetten seri üretim adetlerine kadar satılır. Ürün sayfalarında güncel stok durumunu, fiyatı ve datasheet bağlantısını bulabilirsiniz.

Parça koduyla arama

Üretici parça numarasını yazın; stok ve fiyatı hemen görün.

www.entegreci.com

Ürün kategorileri

Entegreden kapasitöre tüm elektronik komponent kategorileri.

Kategorilere göz atın

Üreticiler

Aradığınız üreticinin ürünlerini tek sayfada inceleyin.

Üreticileri görün

Toplu alım ve teklif

Listede olmayan ya da yüksek adetli parçalar için teklif isteyin.

Teklif isteyin

www.entegreci.com | **destek@entegreci.com** | **0850 305 90 34**

Entegreci is an online electronic components store based in Türkiye. Search by manufacturer part number to see stock, prices and datasheets for integrated circuits, microcontrollers, transistors, passive components and connectors, or request a quote for parts that are not listed.

Bu sayfa Entegreci tarafından eklenmiştir. Belgenin önceki sayfaları asıl yayıncısına aittir ve içeriği değiştirilmemiştir; en güncel sürüm için belgenin yayıncısına başvurun.