Unitrode Products from Texas Instruments

application INFO available

UCC15701/2
UCC25701/2
UCC35701/2

Advanced Voltage Mode Pulse Width Modulator

FEATURES

- 700kHz Operation
- Integrated Oscillator/ Voltage Feed Forward Compensation
- Accurate Duty Cycle Limit
- Accurate Volt-second Clamp
- Optocoupler Interface
- Fault Counting Shutdown
- Fault Latch off or Automatic Shutdown
- Soft Stop Optimized for Synchronous Rectification
- 1A Peak Gate Drive Output
- 130μA Start-up Current
- 750μA Operating Current

DESCRIPTION

The UCC35701/UCC35702 family of pulse width modulators is intended for isolated switching power supplies using primary side control. They can be used for both off-line applications and DC/DC converter designs such as in a distributed power system architecture or as a telecom power source.

The devices feature low startup current, allowing for efficient off-line starting, yet have sufficient output drive to switch power MOSFETs in excess of 500kHz.

Voltage feed forward compensation is operational over a 5:1 input range and provides fast and accurate response to input voltage changes over a 4:1 range. An accurate volt-second clamp and maximum duty cycle limit are also featured.

Fault protection is provided by pulse by pulse current limiting as well as the ability to latch off after a programmable number of repetitive faults has occurred.

Two UVLO options are offered. UCC35701 family has turn-on and turn-off thresholds of 13V/9V and UCC35702 family has thresholds of 9.6V/8.8V.

The UCC35701/2 and the UCC25701/2 are offered in the 14 pin SOIC (D), 14 pin PDIP (N) or in 14 pin TSSOP (PW) packages. The UCC15701/2 is offered in the 14 pin CDIP (J) package.

TYPICAL APPLICATION DIAGRAM

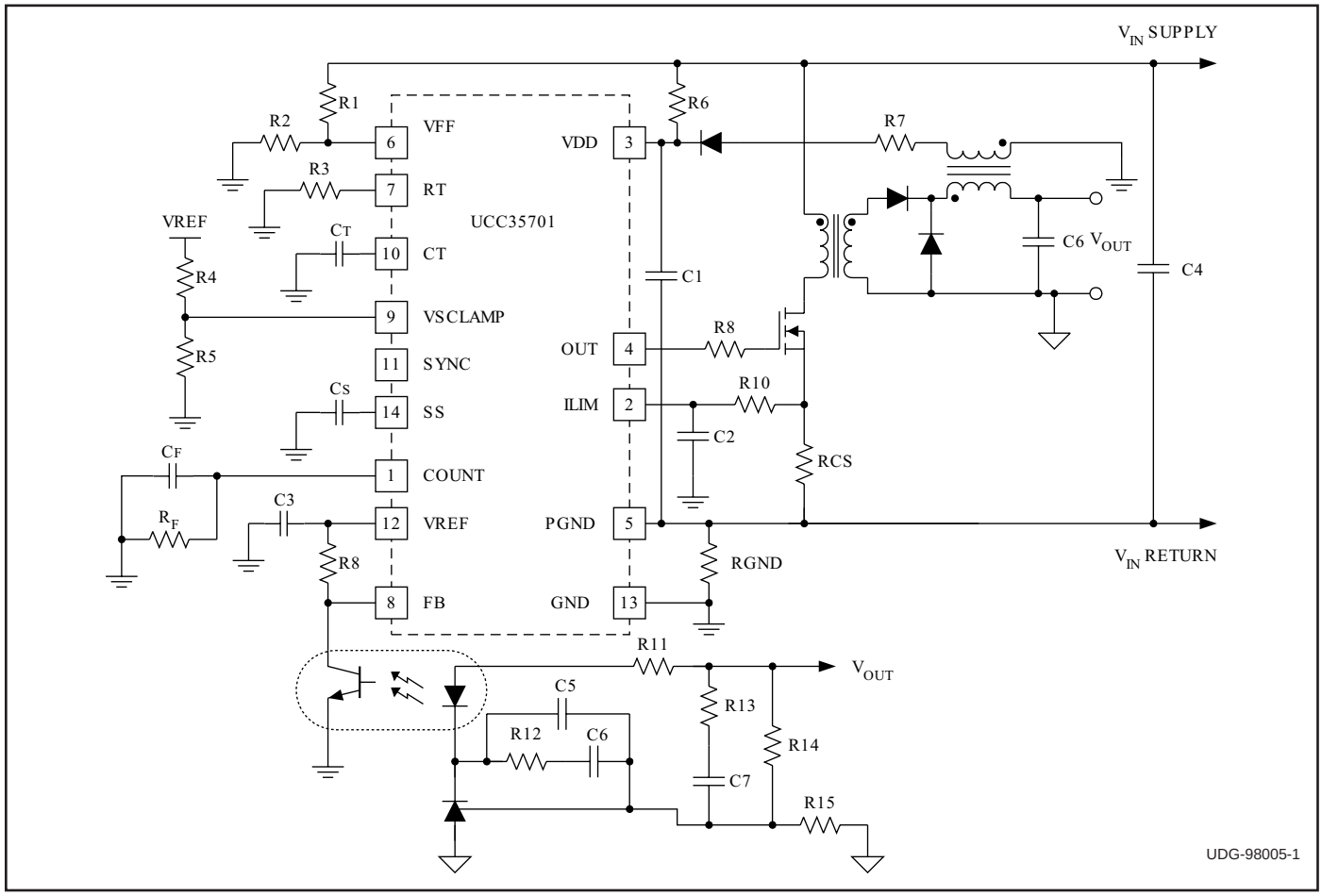

ABSOLUTE MAXIMUM RATINGS

Supply voltage (Supply current limited to 20mA) 15V
Supply Current. 20mA
Input pins (ILIM,VFF,RT,CT,VSCLAMP,SYNC,SS, FB) . . . 6V
Output Current (OUT) DC. . . . . +/–180mA
Output Current (OUT) Pulse (0.5ms) . . . . . +/–1.2A
Storage Temperature. . . . . –65°C to +150°C
Junction Temperature. . . . . –55°C to +150°C
Lead Temperature (Soldering, 10 sec.) . . . . . +300°C

Note: All voltages are with respect to GND. Currents are positive into the specified terminal. Consult Packaging Section of the Databook for thermal limitations and considerations of packages.

CONNECTION DIAGRAMS

DIL-14, SOIC-14, TSSOP-14 (TOP VIEW)
N or J, D, PW PACKAGE

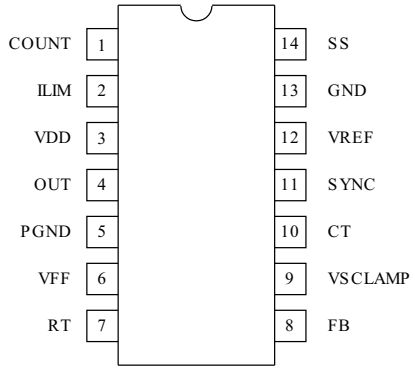

ORDERING INFORMATION

$T_A = T_J$	UVLO Option	Package	Part Number
–55°C to +125°C	13V / 9V	CDIP-14	UCC15701J
	9.6V / 8.8V	CDIP-14	UCC15702J
–40°C to +85°C	13V / 9V	SOIC-14	UCC25701D
		PDIP-14	UCC25701N
		TSSOP-14	UCC25701PW
	9.6V / 8.8V	SOIC-14	UCC25702D
		PDIP-14	UCC25702N
		TSSOP-14	UCC25702PW
0°C to +70°C	13V / 9V	SOIC-14	UCC35701D
		PDIP-14	UCC35701N
		TSSOP-14	UCC35701PW
	9.6V / 8.8V	SOIC-14	UCC35702D
		PDIP-14	UCC35702N
		TSSOP-14	UCC35702PW

The D and PW packages are available taped and reeled. Add TR suffix to the device type (e.g., UCC35701DTR).

ELECTRICAL CHARACTERISTICS: Unless otherwise specified, V_{DD} = 11V, RT = 60.4k, C_T = 330pF, C_{REF} = C_{VDD} = 0.1 F, V_{FF} = 2.0V, and no load on the outputs.

PARAMETER	TEST CONDITIONS	MIN	TYP	MAX	UNITS
UVLO Section					
Start Threshold	(UCCX5701)	12	13	14	V
	(UCCX5702)	8.8	9.6	10.4	V
Stop Threshold	(UCCX5701)	8	9	10	V
	(UCCX5702)	8.0	8.8	9.6	V
Hysteresis	(UCCX5701)	3	4		V
	(UCCX5702)	0.3	0.8		V
Supply Current					
Start-up Current	(UCCX5701) V_{DD} = 11V, V_{DD} Comparator Off		130	200	µA
	(UCCX5702) V_{DD} = 8V, V_{DD} Comparator Off		120	190	µA
I_{DD} Active	V_{DD} Comparator On		0.75	1.5	mA
V_{DD} Clamp Voltage	(UCCX5701) I_{DD} = 10mA	13.5	14.3	15	V
	(UCCX5702) I_{DD} = 10mA	13	13.8	15	V
V_{DD} Clamp – Start Threshold	(UCCX5701)		1.3		V
	(UCCX5702)		4.2		V
Voltage Reference					
V_{REF}	V_{DD} = 10V to 13V, I_{VREF} = 0mA to 2mA	4.9	5	5.1	V
Line Regulation	V_{DD} = 10V to 13V		20		mV
Load Regulation	I_{VREF} = 0mA to 2mA		2		mV
Short Circuit Current	V_{REF} = 0V, T_J = 25°C		20	50	mA

ELECTRICAL CHARACTERISTICS: Unless otherwise specified, V_{DD} = 11V, RT = 60.4k, C_T = 330pF, C_{REF} = C_{VDD} = 0.1 F, V_{FF} = 2.0V, and no load on the outputs.

PARAMETER	TEST CONDITIONS	MIN	TYP	MAX	UNITS
Line Sense					
Vth High Line Comparator		3.9	4	4.1	V
Vth Low Line Comparator		0.5	0.6	0.7	V
Input Bias Current		–100		100	nA
Oscillator Section					
Frequency	V_{FF} = 0.8V to 3.2V	90	100	110	kHz
Frequency	V_{FF} = 0.6V to 3.4V (Note 1)	90	100	110	kHz
SYNC VIH		2			V
SYNC VIL				0.8	V
SYNC Input Current	VSYNC = 2.0V		3	10	μA
RT Voltage	VFF = 0.4V	0.5	0.6	0.7	V
	VFF = 0.8V	0.75	0.8	0.85	V
	VFF = 2.0V	1.95	2.0	2.05	V
	VFF = 3.2V	3.15	3.2	3.25	V
	VFF = 3.6V	3.3	3.4	3.5	V
C_T Peak Voltage	VFF = 0.8V (Note 1)		0.8		V
	VFF = 3.2V (Note 1)		3.2		V
C_T Valley Voltage	(Note 1)		0		V
Soft Start/Shutdown/Duty Cycle Control Section					
I_{SS} Charging Current		10	18	30	μA
I_{SS} Discharging Current		300	500	750	μA
Saturation	V_{DD} = 11V, IC Off		25	100	mV
Fault Counter Section					
Threshold Voltage	VFF = 0.8V to 3.2V	3.8	4	4.2	V
Saturation Voltage	VFF = 0.8V to 3.2V			100	mV
Count Charging Current		10	18	30	μA
Current Limit Section					
Input Bias Current		–100	0	100	nA
Current Limit Threshold		180	200	220	mV
Shutdown Threshold		500	600	700	mV
Pulse Width Modulator Section					
FB Pin Input Impedance	VFB = 3V	30	50	100	kΩ
Minimum Duty Cycle	VFB <= 1V			0	%
Maximum Duty Cycle	VFB >= 4.5V, VSCLAMP >= 2.0V	95	99	100	%
PWM Gain	VFF = 0.8V	35	50	70	%/V
Volt Second Clamp Section					
Maximum Duty Cycle	VFF = 0.8V, VSCLAMP = 0.6V	69	74	79	%
Minimum Duty Cycle	VFF = 3.2V, VSCLAMP = 0.6V	17	19	21	%
Output Section					
VOH	I_{OUT} = –100mA, (V_{DD} – V_{OUT})		0.4	1	V
VOL	I_{OUT} = 100mA		0.4	1	V
Rise Time	C_{LOAD} = 1000pF		20	100	ns
Fall Time	C_{LOAD} = 1000pF		20	100	ns

Note 1: Ensured by design. Not 100% tested in production.

DETAILED BLOCK DIAGRAM

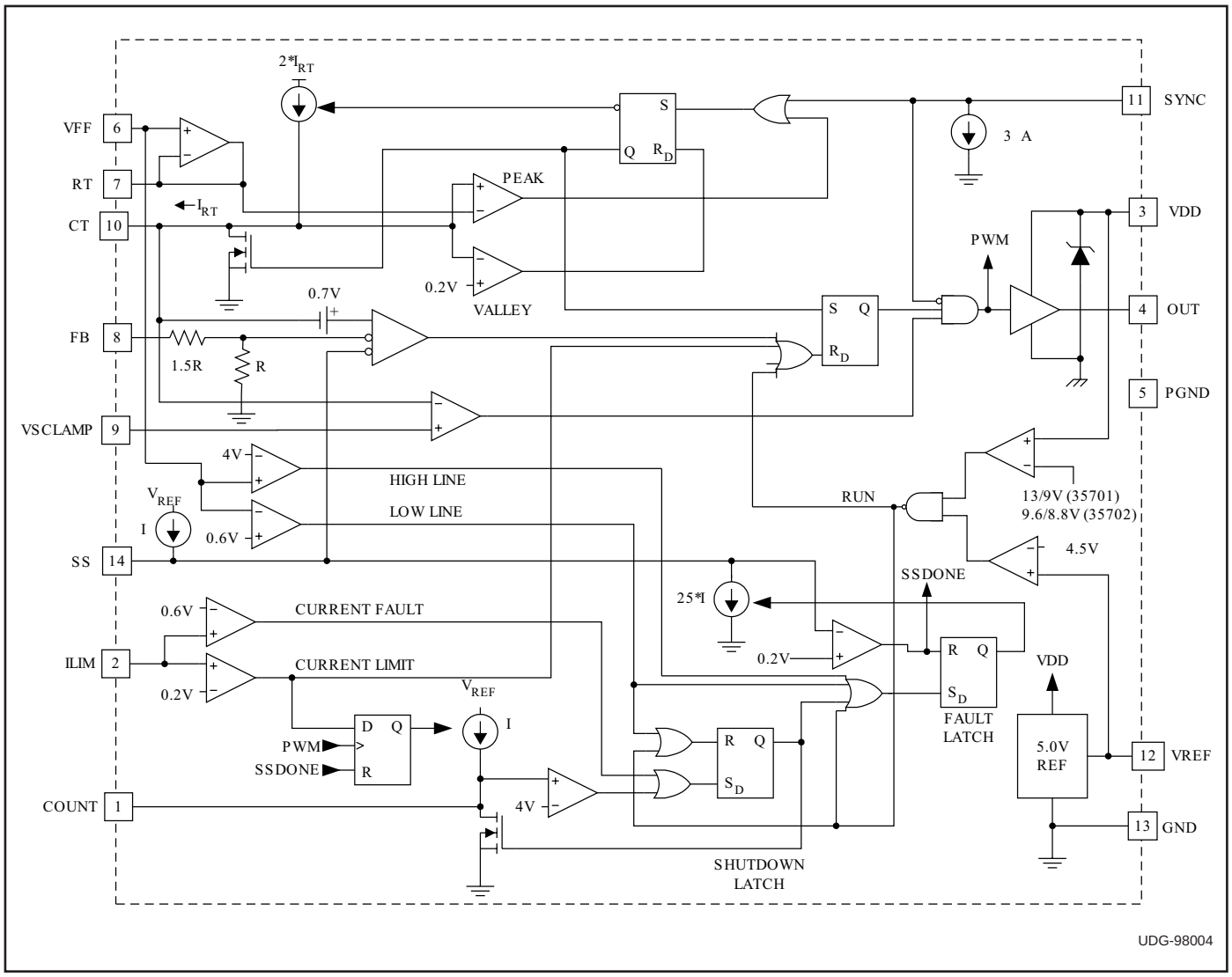

PIN DESCRIPTIONS

VDD: Power supply pin. A shunt regulator limits supply voltage to 14V typical at 10mA shunt current.

PGND: Power Ground. Ground return for output driver and currents.

GND: Analog Ground. Ground return for all other circuits. This pin must be connected directly to PGND on the board.

OUT: Gate drive output. Output resistance is 10Ω maximum.

VFF: Voltage feedforward pin. This pin connects to the power supply input voltage through a resistive divider and provides feedforward compensation over a 0.8V to 3.2V range. A voltage greater than 4.0V or less than 0.6V on this pin initiates a soft stop cycle.

RT: The voltage on this pin mirrors VFF over a 0.8V to 3.2V range. A resistor to ground sets the ramp capacitor charge current. The resistor value should be between 20k and 200k.

CT: A capacitor to ground provides the oscillator/ feedforward sawtooth waveform. Charge current is 2 • I_{RT}, resulting in a CT slope proportional to the input voltage. The ramp voltage range is GND to V_{RT}.

Period and oscillator frequency is given by:

$$T = \frac{V_{RT} \bullet C_T}{2 \bullet I_{RT}} + t_{DISCH} \approx 0.5 \bullet R_T \bullet C_T$$

$$F \approx \frac{2}{RT \bullet CT}$$

PIN DESCRIPTIONS (cont.)

VSCLAMP: Voltage at this pin is compared to the CT voltage, providing a constant volt-second limit. The comparator output terminates the PWM pulse when the ramp voltage exceeds VSCLAMP. The maximum on time is given by:

$$t_{ON} = \frac{V_{VSCLAMP} \bullet CT}{2 \bullet I_{RT}}$$

The maximum duty cycle limit is given by:

$$D_{MAX} = \frac{t_{ON}}{T} = \frac{V_{VSCLAMP}}{V_{RT}}$$

FB: Input to the PWM comparator. This pin is intended to be driven with an optocoupler circuit. Input impedance is 50kΩ Typical modulation range is 1.6V to 3.6V.

SYNC: Level sensitive oscillator sync input. A high level forces the gate drive output low and resets the ramp capacitor. On-time starts at the negative edge the pulse. There is a 3μA pull down current on the pin, allowing it to be disconnected when not used.

VREF: 5.0V trimmed reference with 2% variation over line, load and temperature. Bypass with a minimum of 0.1μF to ground.

SS: Soft Start pin. A capacitor is connected between this pin and ground to set the start up time of the converter. After power up (V_{DD}>13V AND V_{REF}>4.5V), or after a fault condition has been cleared, the soft start capacitor is charged to V_{REF} by a nominal 18μA internal current source. While the soft start capacitor is charging, and while V_{SS} < (0.4 V_{FB}), the duty cycle, and therefore the output voltage of the converter is determined by the soft start circuitry.

At High Line or Low Line fault conditions, the soft start capacitor is discharged with a controlled discharge current of about 500μA. During the discharge time, the duty cycle of the converter is gradually decreased to zero. This soft stop feature allows the synchronous rectifiers to gradually discharge the output LC filter. An abrupt shut off can cause the LC filter to oscillate, producing unpredictable output voltage levels.

All other fault conditions (UVLO, VREF Low, Over Current (0.6V on ILIM) or COUNT) will cause an immediate stop of the converter. Furthermore, both the Over Current fault and the COUNT fault will be internally latched until V_{DD} drops below 9V or V_{FF} goes below the 600mV threshold at the input of the Low Line comparator.

After all fault conditions are cleared and the soft start capacitor is discharged below 200 mV, a soft start cycle will be initiated to restart the converter.

ILIM: Provides a pulse by pulse current limit by terminating the PWM pulse when the input is above 200mV. An input over 600mV initiates a latched soft stop cycle.

COUNT: Capacitor to ground integrates current pulses generated when ILIM exceeds 200mV. A resistor to ground sets the discharge time constant. A voltage over 4V will initiate a latched soft stop cycle.

APPLICATION INFORMATION

(Note: Refer to the Typical Application Diagram on the first page of this datasheet for external component names.) All the equations given below should be considered as first order approximations with final values determined empirically for a specific application.

Power Sequencing

V_{DD} is normally connected through a high impedance (R6) to the input line, with an additional path (R7) to a low voltage bootstrap winding on the power transformer. VFF is connected through a divider (R1/R2) to the input line.

For circuit activation, all of the following conditions are required:

1. VFF between 0.6V and 4.0V (operational input voltage range).

2. VDD has been under the UVLO stop threshold to reset the shutdown latch.

3. VDD is over the UVLO start threshold.

The circuit will start at this point. I_{VDD} will increase from the start up value of 130μA to the run value of 750μA. The capacitor on SS is charged with a 18μA current. When the voltage on SS is greater than 0.8V, output pulses can begin, and supply current will increase to a level determined by the MOSFET gate charge requirements to I_{VDD} ~ 1mA + QT • fs. When the output is active, the bootstrap winding should be sourcing the supply current. If VDD falls below the UVLO stop threshold, the controller will enter a shutdown sequence and turn the controller off, returning the start sequence to the initial condition.

VDD Clamp

An internal shunt regulator clamps VDD so the voltage does not exceed a nominal value of 14V. If the regulator is active, supply current must be limited to less than 20mA.

APPLICATION INFORMATION (cont.)

Output Inhibit

During normal operation, OUT is driven high at the start of a clock period and is driven low by voltages on CT, FB or VSCLAMP.

The following conditions cause the output to be immediately driven low until a clock period starts where none of the conditions are true:

1. $I_{LIM} > 0.2V$

2. FB or SS is less than 0.8V

Current Limiting

ILIM is monitored by two internal comparators. The current limit comparator threshold is 0.2V. If the current limit comparator is triggered, OUT is immediately driven low and held low for the remainder of the clock cycle, providing pulse-by-pulse over-current control for excessive loads. This comparator also causes C_F to be charged for the remainder of the clock cycle.

If repetitive cycles are terminated by the current limit comparator causing COUNT to rise above 4V, the shutdown latch is set. The COUNT integration delay feature will be bypassed by the shutdown comparator which has a 0.6V threshold. The shutdown comparator immediately sets the shutdown latch. R_F in parallel with C_F resets the COUNT integrator following transient faults. R_F must be greater than $(4 \bullet R4) \bullet (1 - D_{MAX})$.

Latched Shutdown

If ILIM rises above 0.6V, or COUNT rises to 4V, the shutdown latch will be set. This will force OUT low, discharge SS and COUNT, and reduce I_{DD} to approximately 750μA. When, and if, V_{DD} falls below the UVLO stop threshold, the shutdown latch will reset and I_{DD} will fall to 130μA, allowing the circuit to restart. If V_{DD} remains above the UVLO stop threshold (within the UVLO band), an alternate restart will occur if VFF is momentarily reduced below 1V. External shutdown commands from any source may be added into either the COUNT or ILIM pins.

Voltage Feedforward

The voltage slope on CT is proportional to line voltage over a 4:1 range and equals 2•VFF (RT•CT). The capacitor charging current is set by the voltage across R_T. V(RT) tracks VFF over a range of 0.8V to 3.2V. A changing line voltage will immediately change the slope of V(CT), changing the pulse width in a proportional manner without using the feedback loop, providing excellent dynamic line regulation.

VFF is intended to operate accurately over a 4:1 range between 0.8V and 3.2V. Voltages at VFF below 0.6V or above 4.0V will initiate a soft stop cycle and a chip restart when the under/over voltage condition is removed.

Volt-Second Clamp

A constant volt-second clamp is formed by comparing the timing capacitor ramp voltage to a fixed voltage derived from the reference. Resistors R4 and R5 set the volt-second limit. For a volt-second product defined as VIN $t_{ON(max)}$, the required voltage at VSCLAMP is:

$$\frac{\left(\frac{R2}{R1+R2}\right) \bullet \left(V_{IN} \bullet t_{ON(\max)}\right)}{R_T \bullet C_T}.$$

The duty cycle limit is then:

$$\frac{V_{VSCLAMP}}{V_{VFF}}, \text{ or } \frac{V_{VSCLAMP}}{V_{IN} \bullet \left(\frac{R2}{R1+R2}\right)}.$$

The maximum duty cycle is realized when the feedforward voltage is set at the low end of the operating range (V_{FF} = 0.8V).

The absolute maximum duty cycle is:

$$D_{MAX} = \frac{V_{VSCLAMP}}{0.8} = \frac{V_{REF}}{0.8} \bullet \frac{R5}{R4+R5}$$

Frequency Set

The frequency is set by a resistor from RT to ground and a capacitor from CT to ground. The frequency is approximately: $F = \frac{2}{(R_T \bullet C_T)}$

External synchronization is via the SYNC pin. The pin has a 1.5V threshold , making it compatible with 5V and 3.3V CMOS logic. The input is level sensitive, with a high input forcing the oscillator ramp low and the output low. An active pull down on the SYNC pin allows it to be unconnected when not used.

Gate Drive Output

The UCC35701/2 is capable of a 1A peak output current. Bypass with at least 0.1μF directly to PGND. The capacitor must have a low equivalent series resistance and inductance. The connection from OUT to the power MOSFET gate should have a 2Ω or greater damping resistor and the distance between chip and MOSFET should be minimized. A low impedance path must be established between the MOSFET source (or ground side of the current sense resistor), the V_{DD} capacitor and PGND. PGND should then be connected by a single path (shown as RGND) to GND.

APPLICATION INFORMATION (cont.)

Transitioning From UCC3570 To UCC35701

The UCC35701/2 is an advanced version of the popular, low power UCC3570 PWM. Significant improvements were made to the IC's oscillator and PWM control sections to enhance overall system performance. All of the key attributes and functional blocks of the UCC3570 were maintained in the UCC35701/2. A typical application using UCC3570 and UCC35701/2 is shown in Fig. 6 for comparison.

The advantages of the UCC35701/2 over the UCC3570 are as follows.

Improved oscillator and PWM control section.

A precise maximum volt-second clamp circuit. The UCC3570 has a dual time base between oscillator and feedforward circuitry. The integated time base in UCC35701/2 improves the duty cycle clamp accuracy, providing better than ± 5% accurate volt- second clamp over full temperature range.

Separately programmable oscillator timing resistor (RT) and capacitor (CT) circuits provide a higher degree of versatility.

An independent SYNC input pin for simple external synchronization.

A smaller value filter capacitor (0.1μF) can be used with the enhanced reference voltage.

UCC35701/2 is pin to pin compatible to UCC3570 but is not a direct drop-in replacement for UCC3570 sockets. The changes required to the power supply printed circuit board of for existing UCC3570 designs are minimal. For conversion, only one extra resistor to set the volt-second clamp needs to be added to the existing PC board layouts. In addition, some component values will need to be changed due to the functionality change in of four of the IC pins.

The Pinout Changes from UCC3570 are as follows.

Pin 7 was changed from SLOPE to RT (for timing resistor)

Pin 8 was changed from ISET to VSCLAMP (requiring one additional resistor from pin 9 to VREF)

Pin 10 was changed from RAMP to CT (single timing capacitor)

Pin 11 was changed from FREQ to SYNC (input only)

Additional Information

Please refer to the following two Unitrode application topics on UCC3570 for additional information.

[1] Application Note U-150, Applying the UCC3570 Voltage-Mode PWM Controller to Both Off-line and DC/DC Converter Designs by Robert A. Mammano

[2] Design Note DN-62, Switching Power Supply Topology, Voltage Mode vs. Current Mode by Robert Mammano

TYPICAL WAVEFORMS

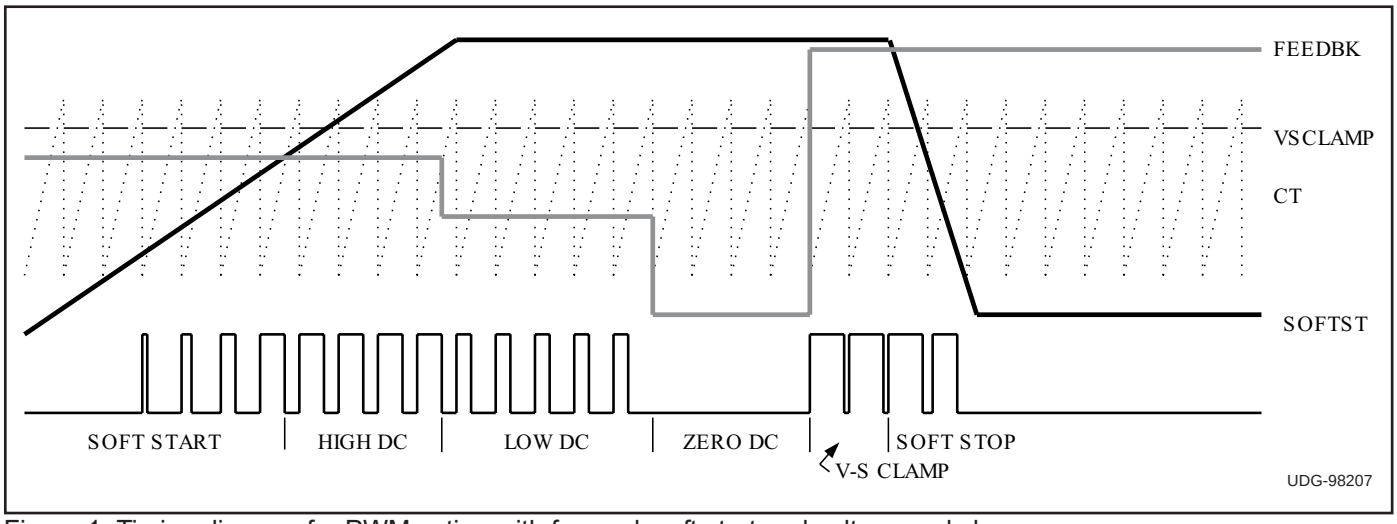

Figure 1. Timing diagram for PWM action with forward, soft start and volt-second clamp.

TYPICAL WAVEFORMS (cont.)

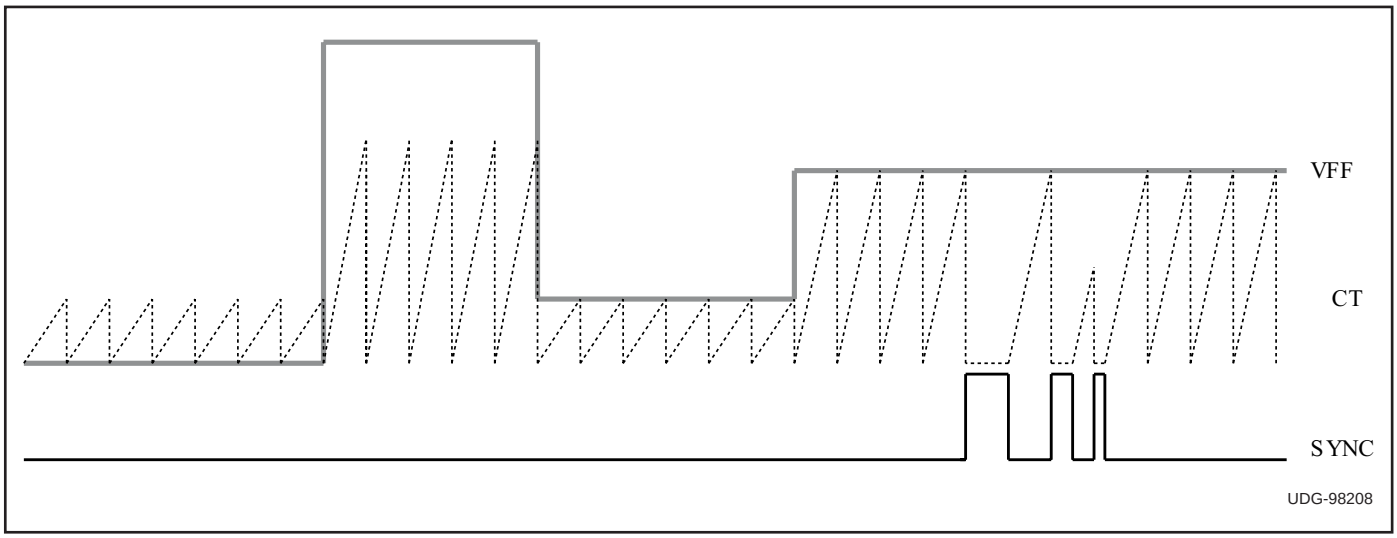

Figure 2. Timing diagram for oscillator waveforms showing feedforward action and synchronization.

TYPICAL CHARACTERISTIC CURVES

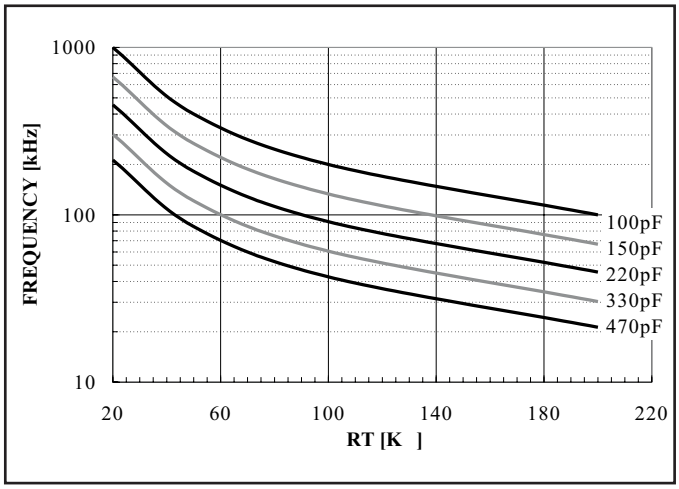

Figure 3. Oscillator frequency vs. RT and CT.

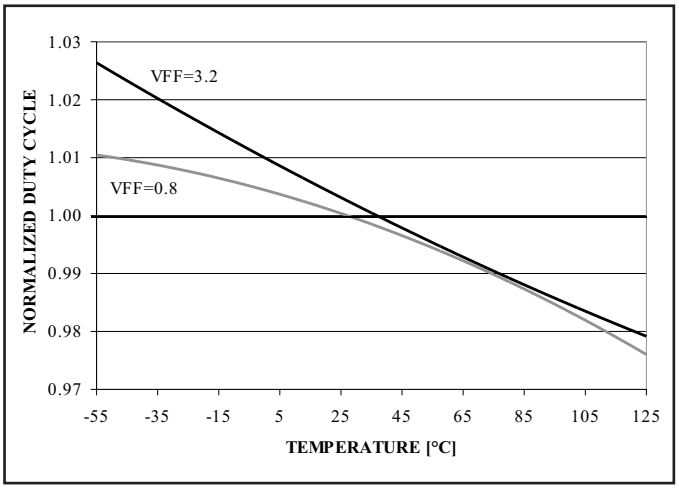

Figure 5. Normalized maximum duty cycle vs. temperature.

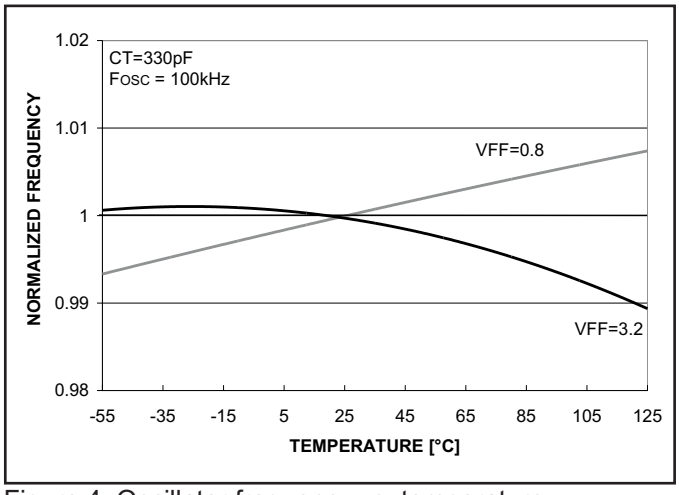

Figure 4. Oscillator frequency vs. temperature.

APPLICATION INFORMATION (cont.)

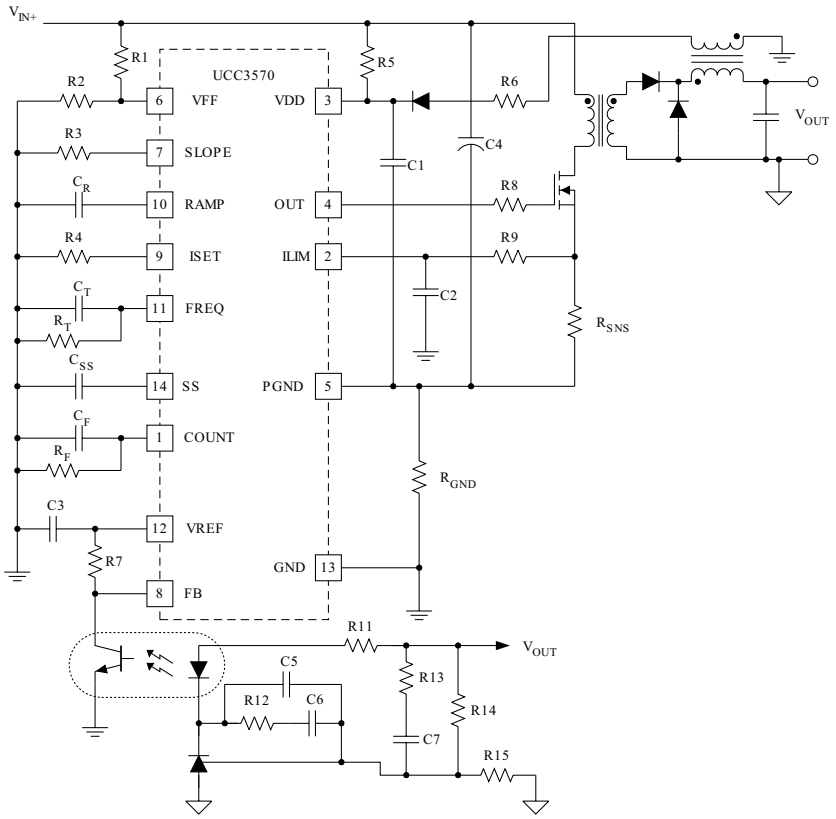

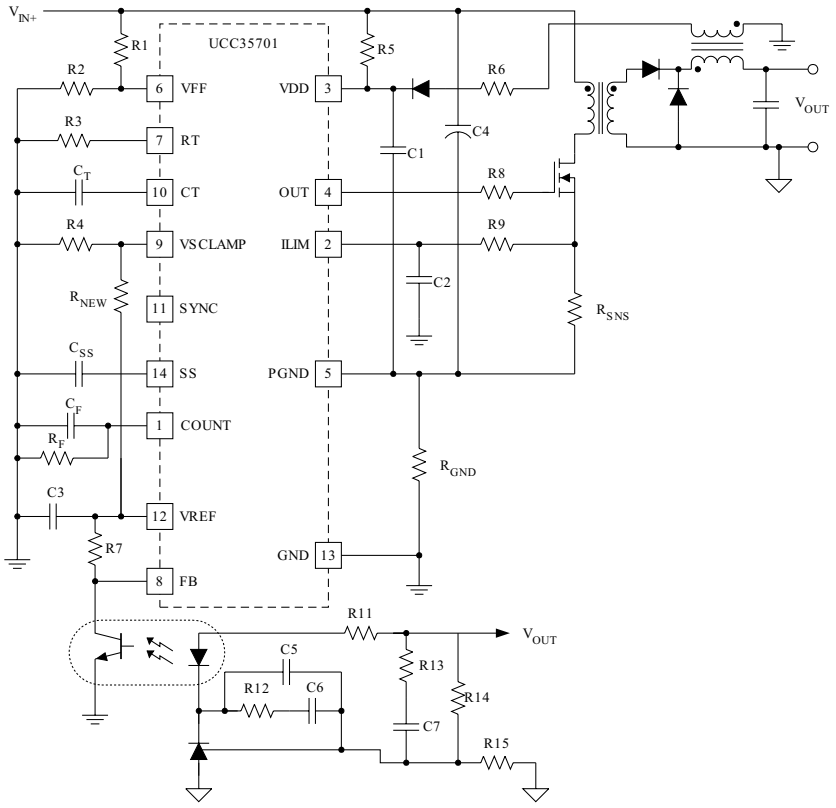

UDG-98210

Figure 6. Single-ended forward circuit comparison between UCC3570 and UCC37501.

REVISION HISTORY

DATE	REVISION	REASON
02/16/05	SLUS293B	Add FB to abs max table. Created revision history table.
6/16/05	SLUS293C	Updated block diagram and the SS pin description.

PACKAGING INFORMATION

Orderable part number	Status (1)	Material type (2)	Package | Pins	Package qty | Carrier	RoHS (3)	Lead finish/ Ball material (4)	MSL rating/ Peak reflow (5)	Op temp (°C)	Part marking (6)
UCC25701D	Active	Production	SOIC (D) | 14	50 | TUBE	Yes	NIPDAU	Level-1-260C-UNLIM	-40 to 85	UCC25701D
UCC25701D.A	Active	Production	SOIC (D) | 14	50 | TUBE	Yes	NIPDAU	Level-1-260C-UNLIM	-40 to 85	UCC25701D
UCC25701DTR	NRND	Production	SOIC (D) | 14	2500 | LARGE T&R	Yes	NIPDAU	Level-1-260C-UNLIM	-40 to 85	UCC25701D
UCC25701DTR.A	NRND	Production	SOIC (D) | 14	2500 | LARGE T&R	Yes	NIPDAU	Level-1-260C-UNLIM	-40 to 85	UCC25701D
UCC25701N	NRND	Production	PDIP (N) | 14	25 | TUBE	Yes	NIPDAU	N/A for Pkg Type	-40 to 85	UCC25701N
UCC25701N.A	NRND	Production	PDIP (N) | 14	25 | TUBE	Yes	NIPDAU	N/A for Pkg Type	-40 to 85	UCC25701N
UCC25701NG4	NRND	Production	PDIP (N) | 14	25 | TUBE	Yes	NIPDAU	N/A for Pkg Type	-40 to 85	UCC25701N
UCC25701PW	Active	Production	TSSOP (PW) | 14	90 | TUBE	Yes	NIPDAU	Level-2-260C-1 YEAR	-40 to 85	25701
UCC25701PW.A	Active	Production	TSSOP (PW) | 14	90 | TUBE	Yes	NIPDAU	Level-2-260C-1 YEAR	-40 to 85	25701
UCC25701PWG4	Active	Production	TSSOP (PW) | 14	90 | TUBE	Yes	NIPDAU	Level-2-260C-1 YEAR	-40 to 85	25701
UCC25702D	NRND	Production	SOIC (D) | 14	50 | TUBE	Yes	NIPDAU	Level-1-260C-UNLIM	-40 to 85	UCC25702D
UCC25702D.A	NRND	Production	SOIC (D) | 14	50 | TUBE	Yes	NIPDAU	Level-1-260C-UNLIM	-40 to 85	UCC25702D
UCC25702DTR	NRND	Production	SOIC (D) | 14	2500 | LARGE T&R	Yes	NIPDAU	Level-1-260C-UNLIM	-40 to 85	UCC25702D
UCC25702DTR.A	NRND	Production	SOIC (D) | 14	2500 | LARGE T&R	Yes	NIPDAU	Level-1-260C-UNLIM	-40 to 85	UCC25702D
UCC25702N	Active	Production	PDIP (N) | 14	25 | TUBE	Yes	NIPDAU	N/A for Pkg Type	-40 to 85	UCC25702N
UCC25702N.A	Active	Production	PDIP (N) | 14	25 | TUBE	Yes	NIPDAU	N/A for Pkg Type	-40 to 85	UCC25702N
UCC25702PW	Active	Production	TSSOP (PW) | 14	90 | TUBE	Yes	NIPDAU	Level-2-260C-1 YEAR	-40 to 85	25702
UCC25702PW.A	Active	Production	TSSOP (PW) | 14	90 | TUBE	Yes	NIPDAU	Level-2-260C-1 YEAR	-40 to 85	25702
UCC25702PWTR	NRND	Production	TSSOP (PW) | 14	2000 | LARGE T&R	Yes	NIPDAU	Level-2-260C-1 YEAR	-40 to 85	25702
UCC25702PWTR.A	NRND	Production	TSSOP (PW) | 14	2000 | LARGE T&R	Yes	NIPDAU	Level-2-260C-1 YEAR	-40 to 85	25702
UCC35701D	Active	Production	SOIC (D) | 14	50 | TUBE	Yes	NIPDAU	Level-1-260C-UNLIM	0 to 70	UCC35701D
UCC35701D.A	Active	Production	SOIC (D) | 14	50 | TUBE	Yes	NIPDAU	Level-1-260C-UNLIM	0 to 70	UCC35701D
UCC35701DTR	NRND	Production	SOIC (D) | 14	2500 | LARGE T&R	Yes	NIPDAU	Level-1-260C-UNLIM	0 to 70	UCC35701D
UCC35701DTR.A	NRND	Production	SOIC (D) | 14	2500 | LARGE T&R	Yes	NIPDAU	Level-1-260C-UNLIM	0 to 70	UCC35701D
UCC35701N	Active	Production	PDIP (N) | 14	25 | TUBE	Yes	NIPDAU	N/A for Pkg Type	0 to 70	UCC35701N
UCC35701N.A	Active	Production	PDIP (N) | 14	25 | TUBE	Yes	NIPDAU	N/A for Pkg Type	0 to 70	UCC35701N
UCC35701PW	Active	Production	TSSOP (PW) | 14	90 | TUBE	Yes	NIPDAU	Level-2-260C-1 YEAR	0 to 70	35701
UCC35701PW.A	Active	Production	TSSOP (PW) | 14	90 | TUBE	Yes	NIPDAU	Level-2-260C-1 YEAR	0 to 70	35701
UCC35702D	NRND	Production	SOIC (D) | 14	50 | TUBE	Yes	NIPDAU	Level-1-260C-UNLIM	0 to 70	UCC35702D

Orderable part number	Status (1)	Material type (2)	Package | Pins	Package qty | Carrier	RoHS (3)	Lead finish/ Ball material (4)	MSL rating/ Peak reflow (5)	Op temp (°C)	Part marking (6)
UCC35702D.A	NRND	Production	SOIC (D) | 14	50 | TUBE	Yes	NIPDAU	Level-1-260C-UNLIM	0 to 70	UCC35702D
UCC35702PW	Active	Production	TSSOP (PW) | 14	90 | TUBE	Yes	NIPDAU	Level-2-260C-1 YEAR	0 to 70	35702
UCC35702PW.A	Active	Production	TSSOP (PW) | 14	90 | TUBE	Yes	NIPDAU	Level-2-260C-1 YEAR	0 to 70	35702

(1) **Status:** For more details on status, see our product life cycle.

(2) **Material type:** When designated, preproduction parts are prototypes/experimental devices, and are not yet approved or released for full production. Testing and final process, including without limitation quality assurance, reliability performance testing, and/or process qualification, may not yet be complete, and this item is subject to further changes or possible discontinuation. If available for ordering, purchases will be subject to an additional waiver at checkout, and are intended for early internal evaluation purposes only. These items are sold without warranties of any kind.

(3) **RoHS values:** Yes, No, RoHS Exempt. See the TI RoHS Statement for additional information and value definition.

(4) **Lead finish/Ball material:** Parts may have multiple material finish options. Finish options are separated by a vertical ruled line. Lead finish/Ball material values may wrap to two lines if the finish value exceeds the maximum column width.

(5) **MSL rating/Peak reflow:** The moisture sensitivity level ratings and peak solder (reflow) temperatures. In the event that a part has multiple moisture sensitivity ratings, only the lowest level per JEDEC standards is shown. Refer to the shipping label for the actual reflow temperature that will be used to mount the part to the printed circuit board.

(6) **Part marking:** There may be an additional marking, which relates to the logo, the lot trace code information, or the environmental category of the part.

Multiple part markings will be inside parentheses. Only one part marking contained in parentheses and separated by a "~" will appear on a part. If a line is indented then it is a continuation of the previous line and the two combined represent the entire part marking for that device.

Important Information and Disclaimer: The information provided on this page represents TI's knowledge and belief as of the date that it is provided. TI bases its knowledge and belief on information provided by third parties, and makes no representation or warranty as to the accuracy of such information. Efforts are underway to better integrate information from third parties. TI has taken and continues to take reasonable steps to provide representative and accurate information but may not have conducted destructive testing or chemical analysis on incoming materials and chemicals. TI and TI suppliers consider certain information to be proprietary, and thus CAS numbers and other limited information may not be available for release.

In no event shall TI's liability arising out of such information exceed the total purchase price of the TI part(s) at issue in this document sold by TI to Customer on an annual basis.

TAPE AND REEL INFORMATION

REEL DIMENSIONS

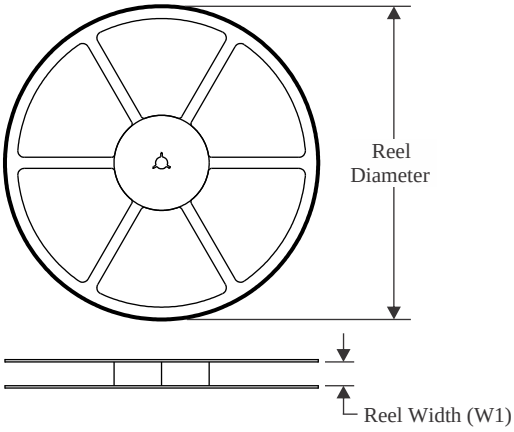

TAPE DIMENSIONS

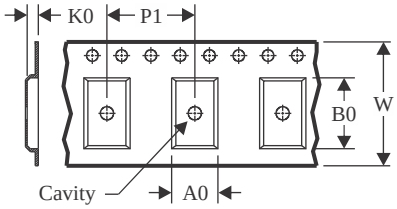

A0	Dimension designed to accommodate the component width
B0	Dimension designed to accommodate the component length
K0	Dimension designed to accommodate the component thickness
W	Overall width of the carrier tape
P1	Pitch between successive cavity centers

QUADRANT ASSIGNMENTS FOR PIN 1 ORIENTATION IN TAPE

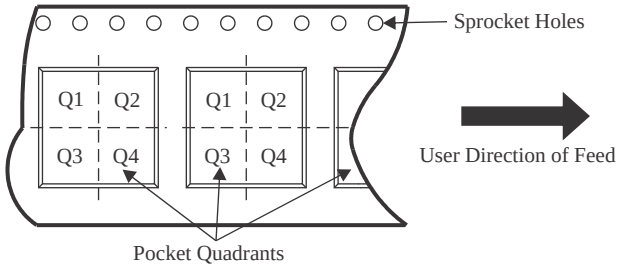

*All dimensions are nominal

Device	Package Type	Package Drawing	Pins	SPQ	Reel Diameter (mm)	Reel Width W1 (mm)	A0 (mm)	B0 (mm)	K0 (mm)	P1 (mm)	W (mm)	Pin1 Quadrant
UCC25701DTR	SOIC	D	14	2500	330.0	16.4	6.5	9.0	2.1	8.0	16.0	Q1
UCC25702DTR	SOIC	D	14	2500	330.0	16.4	6.5	9.0	2.1	8.0	16.0	Q1
UCC25702PWTR	TSSOP	PW	14	2000	330.0	12.4	6.9	5.6	1.6	8.0	12.0	Q1
UCC35701DTR	SOIC	D	14	2500	330.0	16.4	6.5	9.0	2.1	8.0	16.0	Q1

TAPE AND REEL BOX DIMENSIONS

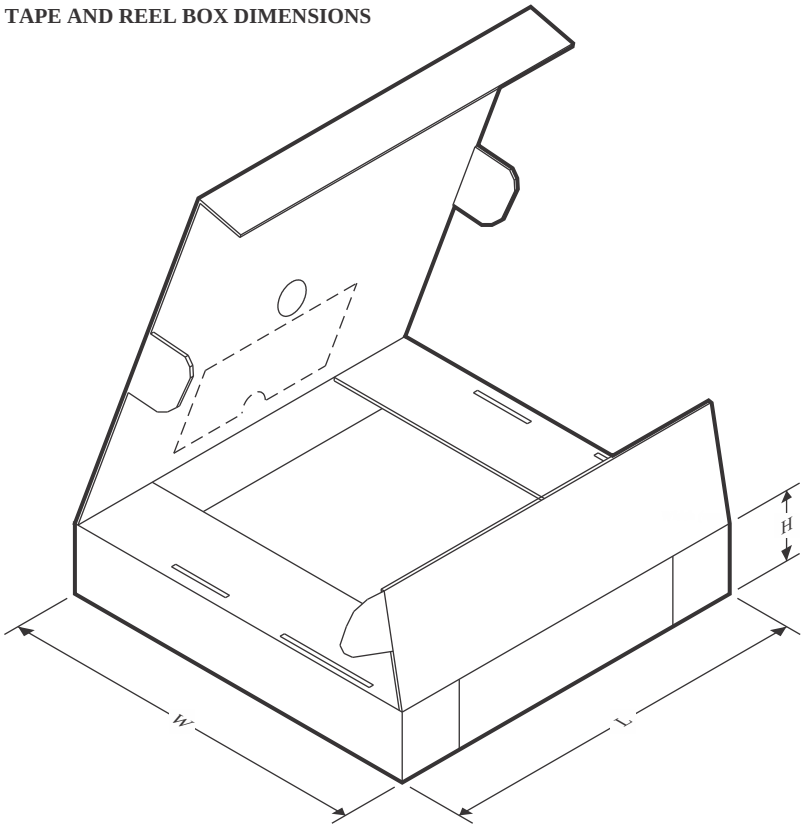

*All dimensions are nominal

Device	Package Type	Package Drawing	Pins	SPQ	Length (mm)	Width (mm)	Height (mm)
UCC25701DTR	SOIC	D	14	2500	340.5	336.1	32.0
UCC25702DTR	SOIC	D	14	2500	353.0	353.0	32.0
UCC25702PWTR	TSSOP	PW	14	2000	353.0	353.0	32.0
UCC35701DTR	SOIC	D	14	2500	340.5	336.1	32.0

TUBE

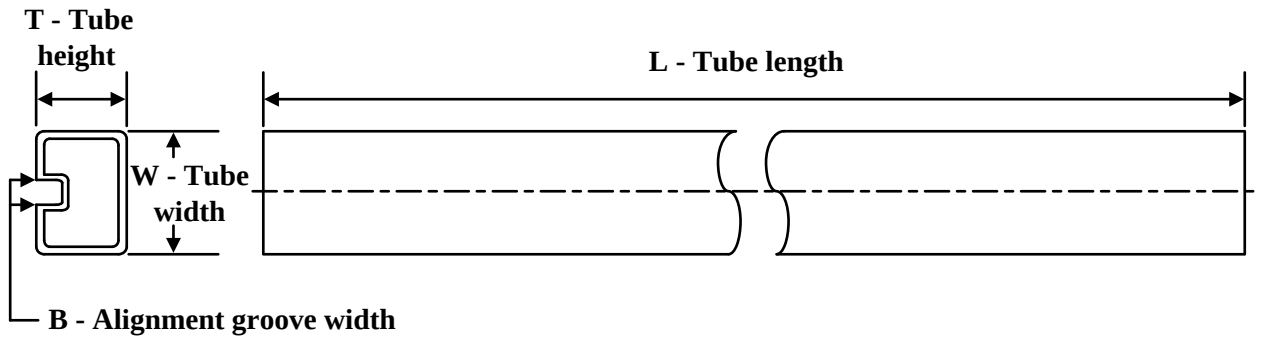

*All dimensions are nominal

Device	Package Name	Package Type	Pins	SPQ	L (mm)	W (mm)	T (µm)	B (mm)
UCC25701D	D	SOIC	14	50	507	8	3940	4.32
UCC25701D.A	D	SOIC	14	50	507	8	3940	4.32
UCC25701N	N	PDIP	14	25	506	13.97	11230	4.32
UCC25701N.A	N	PDIP	14	25	506	13.97	11230	4.32
UCC25701NG4	N	PDIP	14	25	506	13.97	11230	4.32
UCC25701PW	PW	TSSOP	14	90	508	8.5	3250	2.8
UCC25701PW.A	PW	TSSOP	14	90	508	8.5	3250	2.8
UCC25701PWG4	PW	TSSOP	14	90	508	8.5	3250	2.8
UCC25702D	D	SOIC	14	50	507	8	3940	4.32
UCC25702D.A	D	SOIC	14	50	507	8	3940	4.32
UCC25702N	N	PDIP	14	25	506	13.97	11230	4.32
UCC25702N.A	N	PDIP	14	25	506	13.97	11230	4.32
UCC25702PW	PW	TSSOP	14	90	508	8.5	3250	2.8
UCC25702PW.A	PW	TSSOP	14	90	508	8.5	3250	2.8
UCC35701D	D	SOIC	14	50	507	8	3940	4.32
UCC35701D.A	D	SOIC	14	50	507	8	3940	4.32
UCC35701N	N	PDIP	14	25	506	13.97	11230	4.32
UCC35701N.A	N	PDIP	14	25	506	13.97	11230	4.32
UCC35701PW	PW	TSSOP	14	90	508	8.5	3250	2.8
UCC35701PW.A	PW	TSSOP	14	90	508	8.5	3250	2.8
UCC35702D	D	SOIC	14	50	507	8	3940	4.32
UCC35702D.A	D	SOIC	14	50	507	8	3940	4.32
UCC35702PW	PW	TSSOP	14	90	508	8.5	3250	2.8
UCC35702PW.A	PW	TSSOP	14	90	508	8.5	3250	2.8

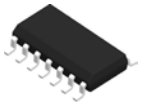

PACKAGE OUTLINE

D0014A

SOIC - 1.75 mm max height

SMALL OUTLINE INTEGRATED CIRCUIT

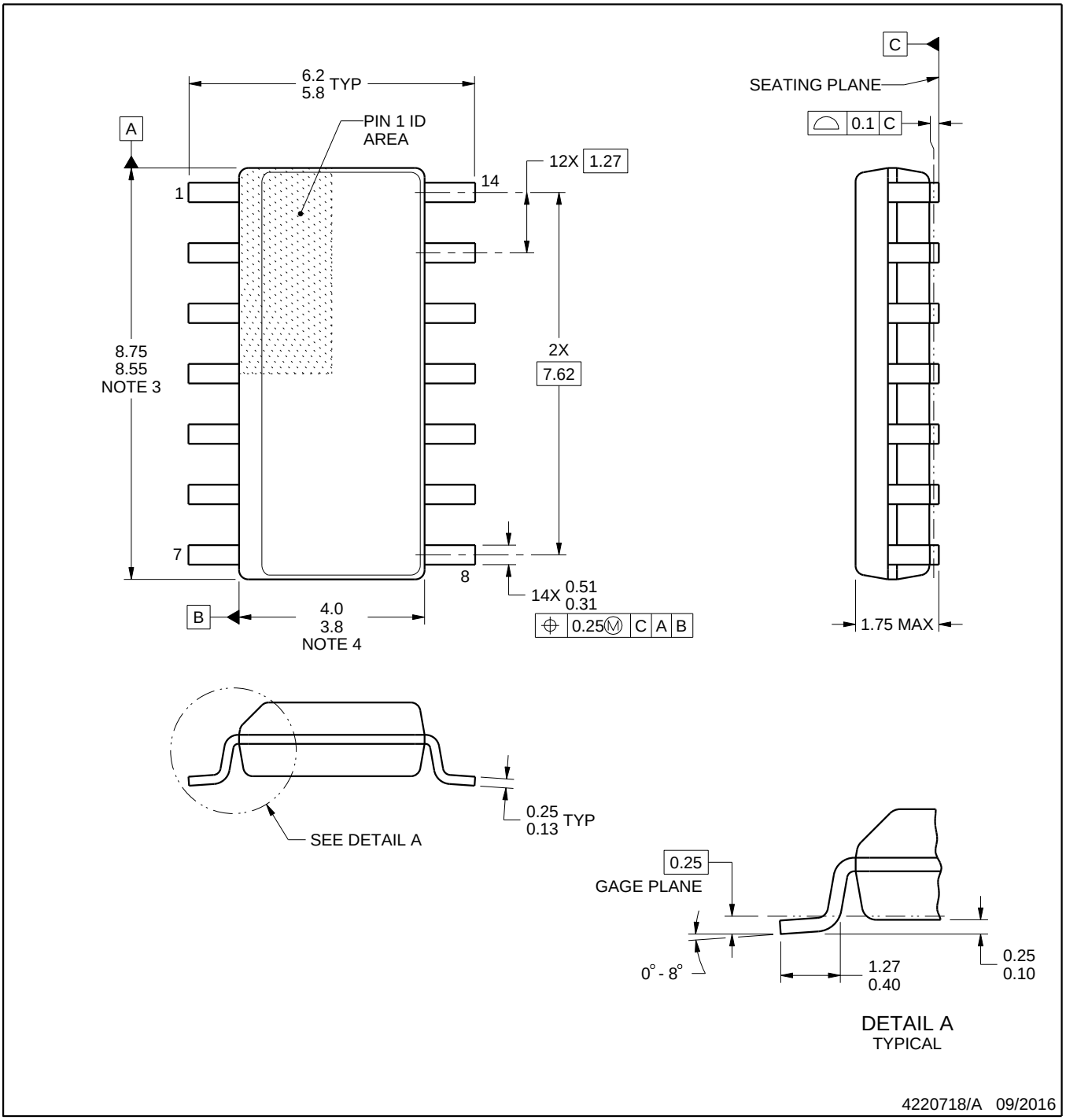

NOTES:

1. All linear dimensions are in millimeters. Dimensions in parenthesis are for reference only. Dimensioning and tolerancing per ASME Y14.5M.
2. This drawing is subject to change without notice.
3. This dimension does not include mold flash, protrusions, or gate burrs. Mold flash, protrusions, or gate burrs shall not exceed 0.15 mm, per side.
4. This dimension does not include interlead flash. Interlead flash shall not exceed 0.43 mm, per side.
5. Reference JEDEC registration MS-012, variation AB.

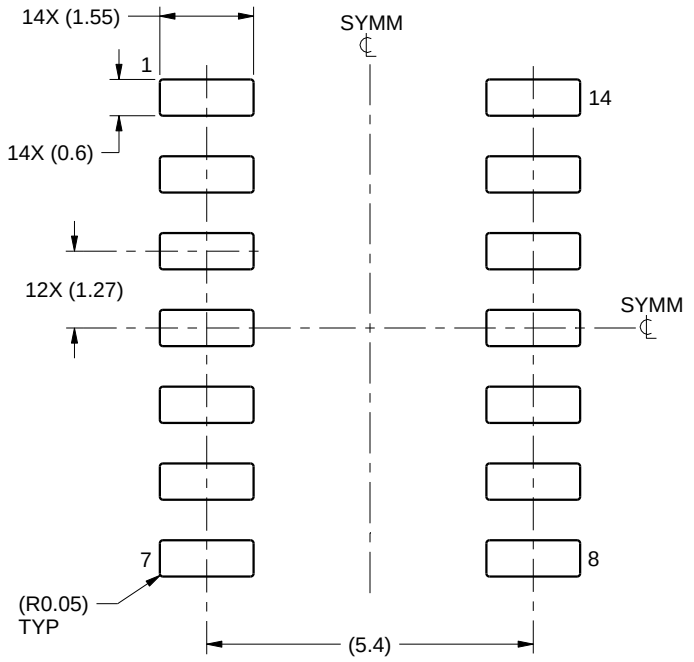

LAND PATTERN EXAMPLE
SCALE:8X

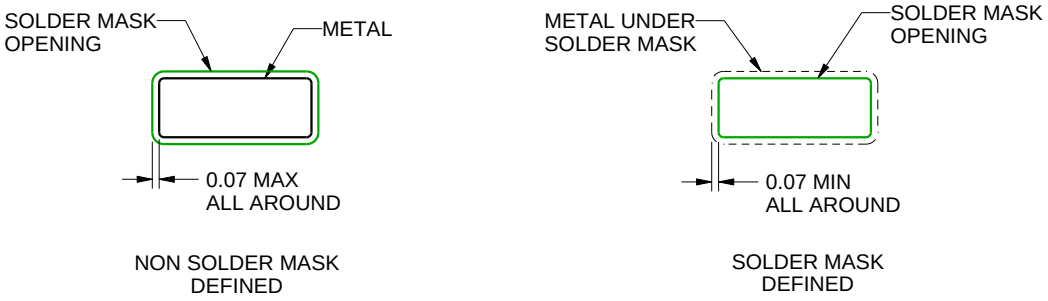

SOLDER MASK DETAILS

4220718/A 09/2016

NOTES: (continued)

6. Publication IPC-7351 may have alternate designs.
7. Solder mask tolerances between and around signal pads can vary based on board fabrication site.

EXAMPLE STENCIL DESIGN

D0014A

SOIC - 1.75 mm max height

SMALL OUTLINE INTEGRATED CIRCUIT

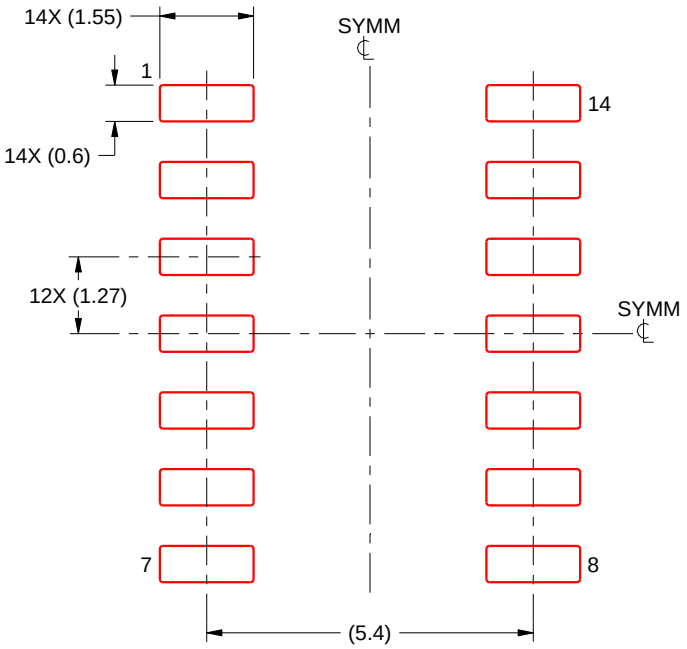

SOLDER PASTE EXAMPLE
BASED ON 0.125 mm THICK STENCIL
SCALE:8X

4220718/A 09/2016

NOTES: (continued)

8. Laser cutting apertures with trapezoidal walls and rounded corners may offer better paste release. IPC-7525 may have alternate design recommendations.
9. Board assembly site may have different recommendations for stencil design.

N (R–PDIP–T**)

PLASTIC DUAL–IN–LINE PACKAGE

16 PINS SHOWN

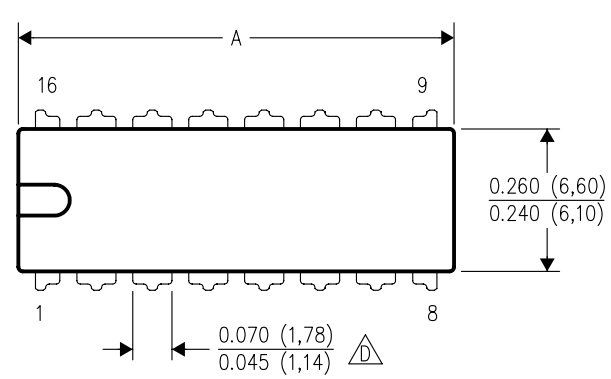

DIM \ PINS **	14	16	18	20
A MAX	0.775 (19,69)	0.775 (19,69)	0.920 (23,37)	1.060 (26,92)
A MIN	0.745 (18,92)	0.745 (18,92)	0.850 (21,59)	0.940 (23,88)
MS–001 VARIATION (C)	AA	BB	AC	AD

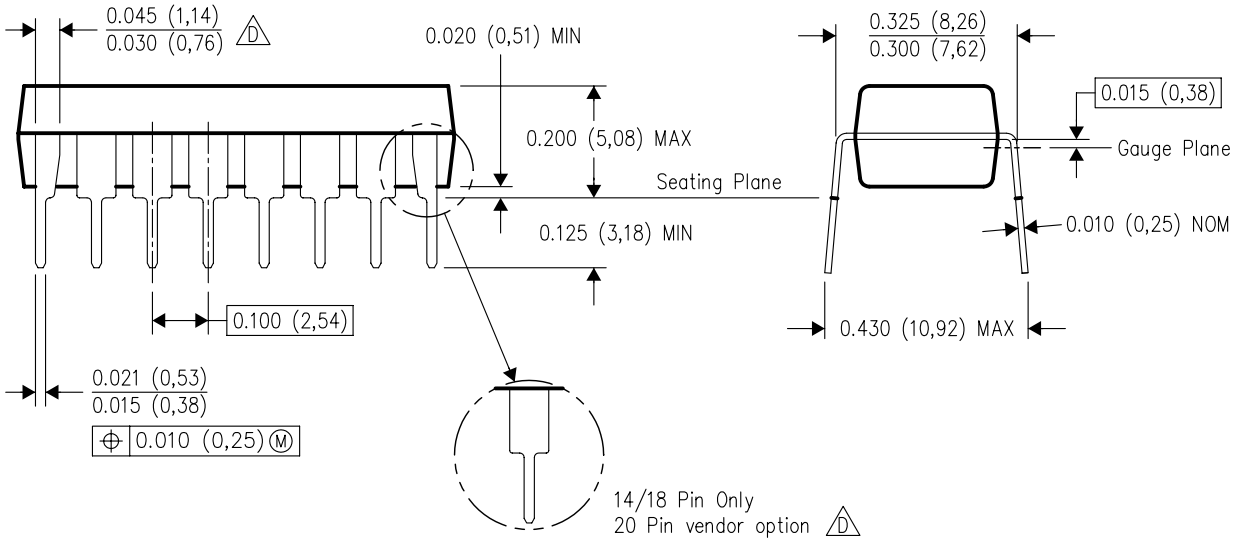

4040049/E 12/2002

NOTES:
A. All linear dimensions are in inches (millimeters).
B. This drawing is subject to change without notice.
C. Falls within JEDEC MS–001, except 18 and 20 pin minimum body length (Dim A).
D. The 20 pin end lead shoulder width is a vendor option, either half or full width.

PACKAGE OUTLINE

PW0014A

TSSOP - 1.2 mm max height

SMALL OUTLINE PACKAGE

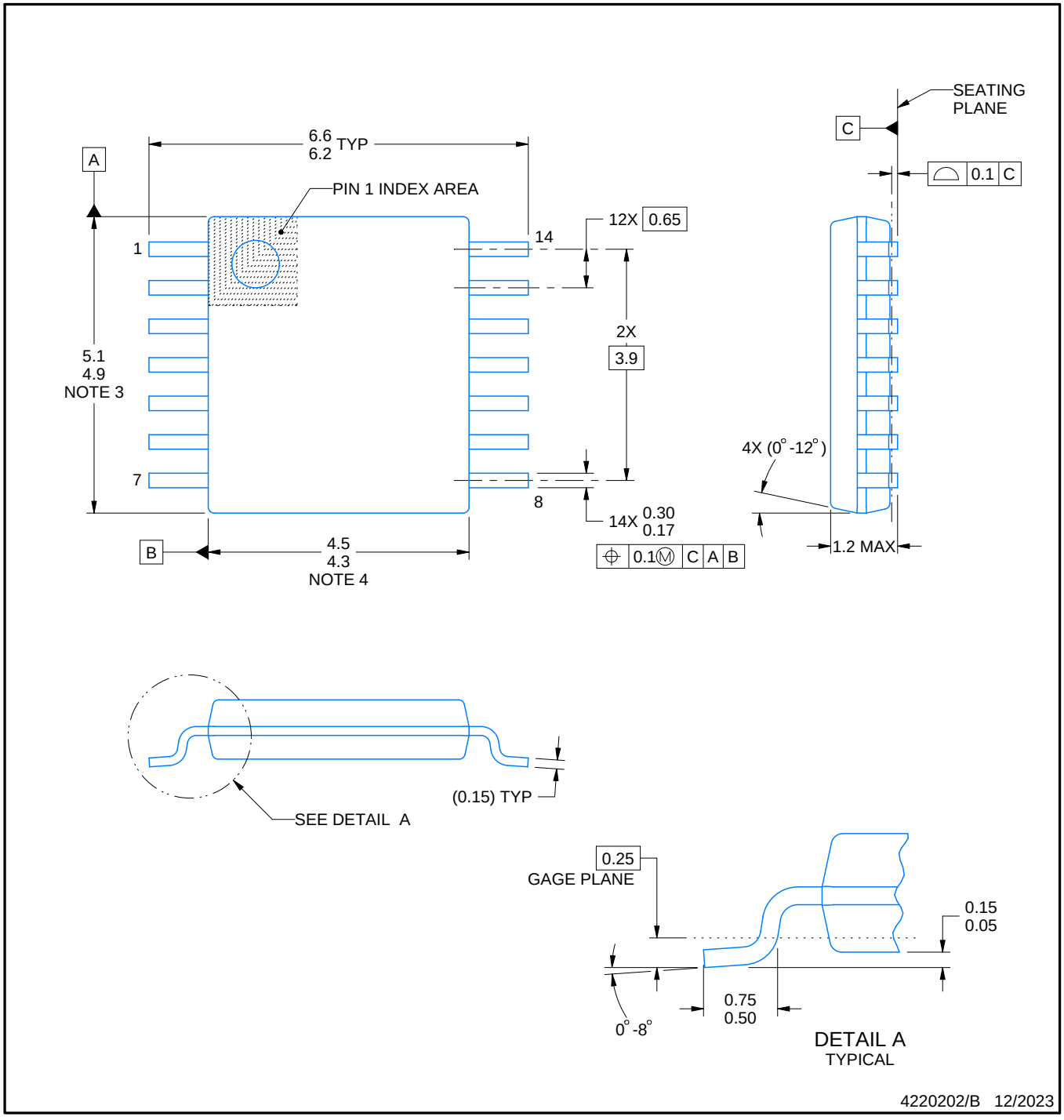

NOTES:

1. All linear dimensions are in millimeters. Any dimensions in parenthesis are for reference only. Dimensioning and tolerancing per ASME Y14.5M.
2. This drawing is subject to change without notice.
3. This dimension does not include mold flash, protrusions, or gate burrs. Mold flash, protrusions, or gate burrs shall not exceed 0.15 mm per side.
4. This dimension does not include interlead flash. Interlead flash shall not exceed 0.25 mm per side.
5. Reference JEDEC registration MO-153.

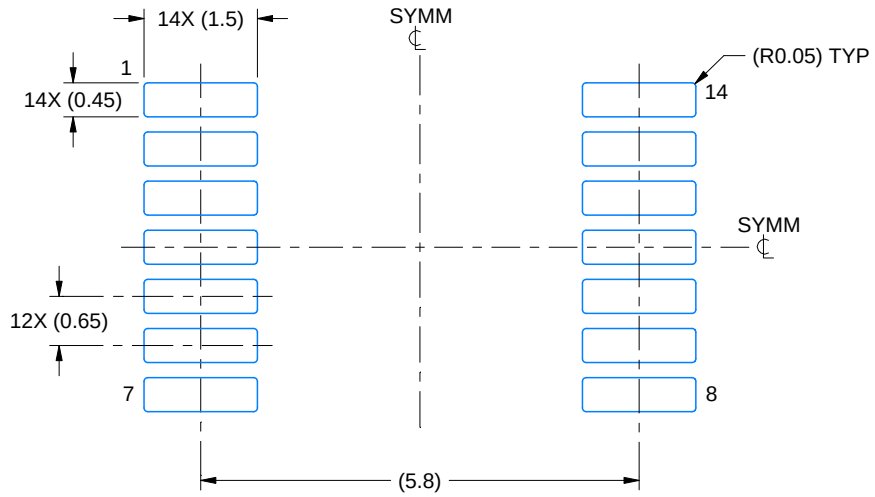

LAND PATTERN EXAMPLE
EXPOSED METAL SHOWN
SCALE: 10X

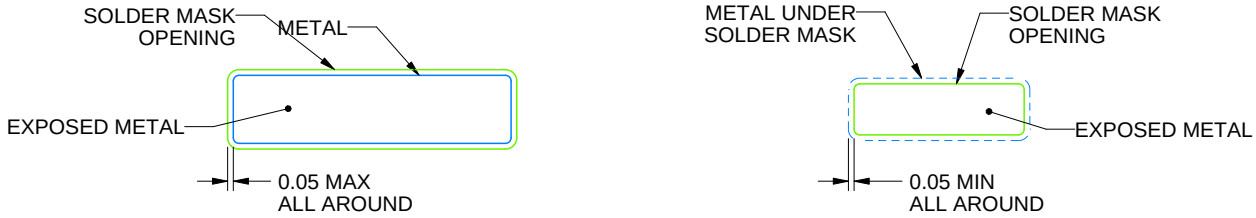

SOLDER MASK DETAILS

4220202/B 12/2023

NOTES: (continued)

6. Publication IPC-7351 may have alternate designs.
7. Solder mask tolerances between and around signal pads can vary based on board fabrication site.

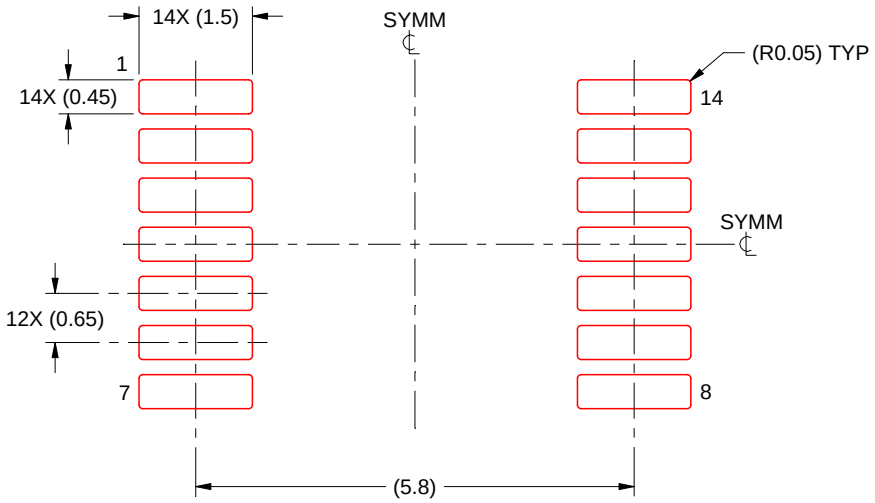

SOLDER PASTE EXAMPLE
BASED ON 0.125 mm THICK STENCIL
SCALE: 10X

4220202/B 12/2023

NOTES: (continued)

8. Laser cutting apertures with trapezoidal walls and rounded corners may offer better paste release. IPC-7525 may have alternate design recommendations.
9. Board assembly site may have different recommendations for stencil design.

IMPORTANT NOTICE AND DISCLAIMER

TI PROVIDES TECHNICAL AND RELIABILITY DATA (INCLUDING DATASHEETS), DESIGN RESOURCES (INCLUDING REFERENCE DESIGNS), APPLICATION OR OTHER DESIGN ADVICE, WEB TOOLS, SAFETY INFORMATION, AND OTHER RESOURCES “AS IS” AND WITH ALL FAULTS, AND DISCLAIMS ALL WARRANTIES, EXPRESS AND IMPLIED, INCLUDING WITHOUT LIMITATION ANY IMPLIED WARRANTIES OF MERCHANTABILITY, FITNESS FOR A PARTICULAR PURPOSE OR NON-INFRINGEMENT OF THIRD PARTY INTELLECTUAL PROPERTY RIGHTS.

These resources are intended for skilled developers designing with TI products. You are solely responsible for (1) selecting the appropriate TI products for your application, (2) designing, validating and testing your application, and (3) ensuring your application meets applicable standards, and any other safety, security, regulatory or other requirements.

These resources are subject to change without notice. TI grants you permission to use these resources only for development of an application that uses the TI products described in the resource. Other reproduction and display of these resources is prohibited. No license is granted to any other TI intellectual property right or to any third party intellectual property right. TI disclaims responsibility for, and you fully indemnify TI and its representatives against any claims, damages, costs, losses, and liabilities arising out of your use of these resources.

TI’s products are provided subject to TI’s Terms of Sale, TI’s General Quality Guidelines, or other applicable terms available either on ti.com or provided in conjunction with such TI products. TI’s provision of these resources does not expand or otherwise alter TI’s applicable warranties or warranty disclaimers for TI products. Unless TI explicitly designates a product as custom or customer-specified, TI products are standard, catalog, general purpose devices.

TI objects to and rejects any additional or different terms you may propose.

Copyright © 2026, Texas Instruments Incorporated

Last updated 10/2025

ENTEGRECİ

Bu belge www.entegreci.com üzerinden sunulmaktadır.

Elektronik komponent tedarikinde Entegreci

Entegreci, Eskişehir merkezli, Türkiye geneline satış yapan bir elektronik komponent mağazasıdır. Entegreler (IC), mikrodenetleyiciler, transistörler, diyotlar, pasif elemanlar, konnektörler, modüller ve geliştirme kartları tek adetten seri üretim adetlerine kadar satılır. Ürün sayfalarında güncel stok durumunu, fiyatı ve datasheet bağlantısını bulabilirsiniz.

Parça koduyla arama

Üretici parça numarasını yazın; stok ve fiyatı hemen görün.

www.entegreci.com

Ürün kategorileri

Entegreden kapasitöre tüm elektronik komponent kategorileri.

Kategorilere göz atın

Üreticiler

Aradığınız üreticinin ürünlerini tek sayfada inceleyin.

Üreticileri görün

Toplu alım ve teklif

Listede olmayan ya da yüksek adetli parçalar için teklif isteyin.

Teklif isteyin

www.entegreci.com | **destek@entegreci.com** | **0850 305 90 34**

Entegreci is an online electronic components store based in Türkiye. Search by manufacturer part number to see stock, prices and datasheets for integrated circuits, microcontrollers, transistors, passive components and connectors, or request a quote for parts that are not listed.

Bu sayfa Entegreci tarafından eklenmiştir. Belgenin önceki sayfaları asıl yayıncısına aittir ve içeriği değiştirilmemiştir; en güncel sürüm için belgenin yayıncısına başvurun.