N-Channel 150 V (D-S) MOSFET

PowerPAK® SO-8 Single

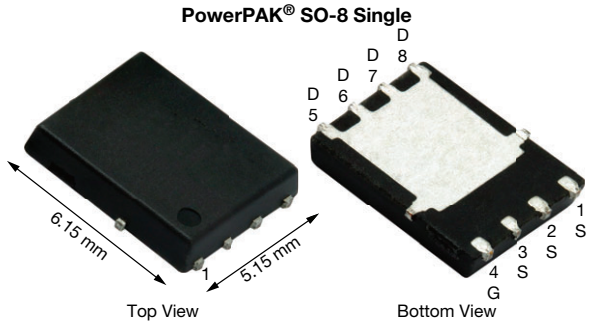

Top View Bottom View

FEATURES

- TrenchFET® Gen V power MOSFET
- Very low R_{DS} x Q_g figure-of-merit (FOM)
- Tuned for the lowest R_{DS} x Q_{oss} FOM
- 100 % R_g and UIS tested
- Material categorization: for definitions of compliance please see www.vishay.com/doc?99912

RoHS COMPLIANT HALOGEN FREE

APPLICATIONS

- Synchronous rectification
- Primary side switch
- DC/DC converters
- Power supplies
- Motor drive control

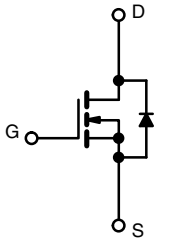

N-Channel MOSFET

PRODUCT SUMMARY	
V_{DS} (V)	150
$R_{DS(on)}$ max. (Ω) at V_{GS} = 10 V	0.016
$R_{DS(on)}$ max. (Ω) at V_{GS} = 7.5 V	0.017
Q_g typ. (nC)	19
I_D (A)	42.2
Configuration	Single

ORDERING INFORMATION	
Package	PowerPAK SO-8
Lead (Pb)-free and halogen-free	SIR576DP-T1-RE3
Alternate manufacturing location	SIR576DP-T1-BE3

ABSOLUTE MAXIMUM RATINGS (T_A = 25 °C, unless otherwise noted)

PARAMETER		SYMBOL	LIMIT	UNIT
Drain-source voltage		V_{DS}	150	V
Gate-source voltage		V_{GS}	± 20	
Continuous drain current (T_J = 150 °C)	T_C = 25 °C	I_D	42.2	A
	T_C = 70 °C		33.8	
	T_A = 25 °C		11.1 [b, c]	
	T_A = 70 °C		8.9 [b, c]	
Pulsed drain current (t = 100 µs)		I_{DM}	120	
Continuous source-drain diode current	T_C = 25 °C	I_S	64.9	
	T_A = 25 °C		4.5 [b, c]	
Single pulse avalanche current	L = 0.1 mH	I_{AS}	16	
Single pulse avalanche energy		E_{AS}	12.8	mJ
Maximum power dissipation	T_C = 25 °C	P_D	71.4	W
	T_C = 70 °C		45.7	
	T_A = 25 °C		5.0 [b, c]	
	T_A = 70 °C		3.2 [b, c]	
Operating junction and storage temperature range		T_J, T_{stg}	-55 to +150	°C
Soldering recommendations (peak temperature) [c]			260	

THERMAL RESISTANCE RATINGS

PARAMETER		SYMBOL	TYPICAL	MAXIMUM	UNIT
Maximum junction-to-ambient [b]	t ≤ 10 s	R_{thJA}	20	25	°C/W
Maximum junction-to-case (drain)	Steady state	R_{thJC}	1.4	1.75	

Notes

a. Package limited
b. Surface mounted on 1" x 1" FR4 board
c. t = 10 s
d. See solder profile (www.vishay.com/doc?73257). The PowerPAK SO-8 is a leadless package. The end of the lead terminal is exposed copper (not plated) as a result of the singulation process in manufacturing. A solder fillet at the exposed copper tip cannot be guaranteed and is not required to ensure adequate bottom side solder interconnection
e. Rework conditions: manual soldering with a soldering iron is not recommended for leadless components
f. Maximum under steady state conditions is 70 °C/W
g. T_C = 25 °C

For technical questions, contact: pmostechsupport@vishay.com

THIS DOCUMENT IS SUBJECT TO CHANGE WITHOUT NOTICE. THE PRODUCTS DESCRIBED HEREIN AND THIS DOCUMENT ARE SUBJECT TO SPECIFIC DISCLAIMERS, SET FORTH AT www.vishay.com/doc?91000

SPECIFICATIONS (T_J = 25 °C, unless otherwise noted)						
PARAMETER	**SYMBOL**	**TEST CONDITIONS**	**MIN.**	**TYP.**	**MAX.**	**UNIT**
Static						
Drain-source breakdown voltage	V_{DS}	V_{GS} = 0 V, I_D = 1 mA	150	-	-	V
V_{DS} temperature coefficient	$\Delta V_{DS}/T_J$	I_D = 10 mA	-	112	-	mV/°C
$V_{GS(th)}$ temperature coefficient	$\Delta V_{GS(th)}/T_J$	I_D = 250 µA	-	-6.4	-	
Gate-source threshold voltage	$V_{GS(th)}$	V_{DS} = V_{GS}, I_D = 250 µA	2	-	4	V
Gate-source leakage	I_{GSS}	V_{DS} = 0 V, V_{GS} = ± 20 V	-	-	100	nA
Zero gate voltage drain current	I_{DSS}	V_{DS} = 120 V, V_{GS} = 0 V	-	-	1	µA
		V_{DS} = 120 V, V_{GS} = 0 V, T_J = 70 °C	-	-	15	
Drain-source on-state resistance [a]	$R_{DS(on)}$	V_{GS} = 10 V, I_D = 10 A	-	0.0133	0.016	Ω
		V_{GS} = 7.5 V, I_D = 10 A	-	0.0141	0.017	
Forward transconductance [a]	g_{fs}	V_{DS} = 15 V, I_D = 10 A	-	32	-	S
Dynamic [b]						
Input capacitance	C_{iss}	V_{DS} = 75 V, V_{GS} = 0 V, f = 1 MHz	-	1870	-	pF
Output capacitance	C_{oss}		-	170	-	
Reverse transfer capacitance	C_{rss}		-	6.1	-	
Total gate charge	Q_g	V_{DS} = 75 V, V_{GS} = 10 V, I_D = 10 A	-	25.2	38	nC
		V_{DS} = 75 V, V_{GS} = 7.5 V, I_D = 10 A	-	19	29	
Gate-source charge	Q_{gs}		-	9.1	-	
Gate-drain charge	Q_{gd}		-	2.8	-	
Output charge	Q_{oss}	V_{DS} = 75 V, V_{GS} = 0 V	-	56	-	
Gate resistance	R_g	f = 1 MHz	0.4	1.0	1.7	Ω
Turn-on delay time	$t_{d(on)}$	V_{DD} = 75 V, R_L = 7.5 Ω, $I_D \cong$ 10 A, V_{GEN} = 10 V, R_g = 1 Ω	-	15	30	ns
Rise time	t_r		-	9	18	
Turn-off delay time	$t_{d(off)}$		-	24	48	
Fall time	t_f		-	15	30	
Turn-on delay time	$t_{d(on)}$	V_{DD} = 75 V, R_L = 7.5 Ω, $I_D \cong$ 10 A, V_{GEN} = 7.5 V, R_g = 1 Ω	-	18	36	
Rise time	t_r		-	15	30	
Turn-off delay time	$t_{d(off)}$		-	24	48	
Fall time	t_f		-	16	32	
Drain-Source Body Diode Characteristics						
Continuous source-drain diode current	I_S	T_C = 25 °C	-	-	64.9	A
Pulse diode forward current	I_{SM}		-	-	120	
Body diode voltage	V_{SD}	I_S = 5 A, V_{GS} = 0 V	-	0.78	1.1	V
Body diode reverse recovery time	t_{rr}	I_F = 10 A, di/dt = 100 A/µs, T_J = 25 °C	-	67	134	ns
Body diode reverse recovery charge	Q_{rr}		-	128	256	nC
Reverse recovery fall time	t_a		-	54	-	ns
Reverse recovery rise time	t_b		-	13	-	

Notes

a. Pulse test; pulse width ≤ 300 µs, duty cycle ≤ 2 %

b. Guaranteed by design, not subject to production testing

Stresses beyond those listed under "Absolute Maximum Ratings" may cause permanent damage to the device. These are stress ratings only, and functional operation of the device at these or any other conditions beyond those indicated in the operational sections of the specifications is not implied. Exposure to absolute maximum rating conditions for extended periods may affect device reliability.

For technical questions, contact: pmostechsupport@vishay.com
THIS DOCUMENT IS SUBJECT TO CHANGE WITHOUT NOTICE. THE PRODUCTS DESCRIBED HEREIN AND THIS DOCUMENT ARE SUBJECT TO SPECIFIC DISCLAIMERS, SET FORTH AT www.vishay.com/doc?91000

TYPICAL CHARACTERISTICS (25 °C, unless otherwise noted)

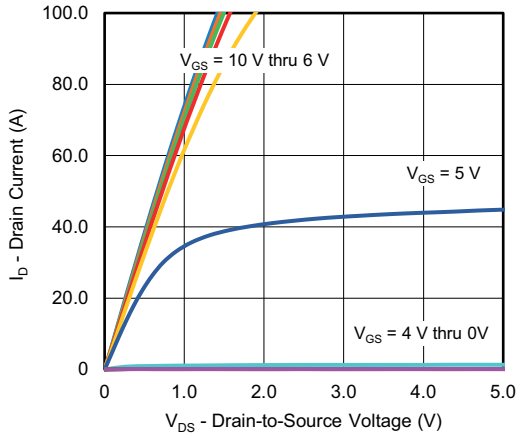

Output Characteristics

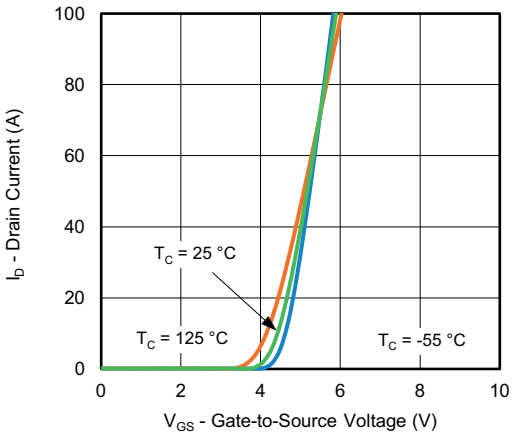

Transfer Characteristics

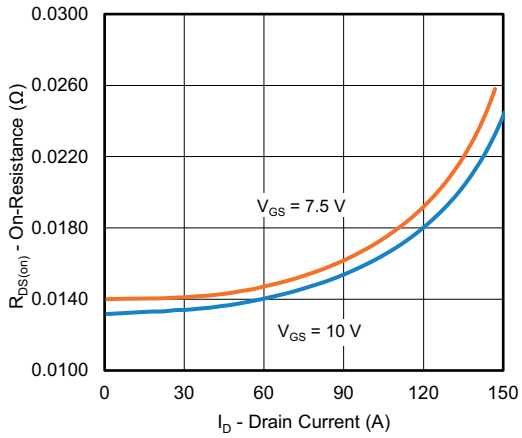

On-Resistance vs. Drain Current and Gate Voltage

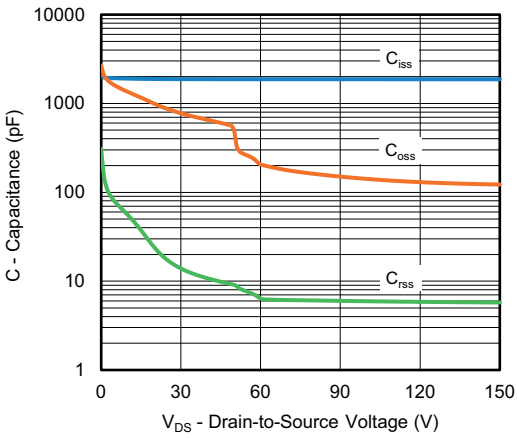

Capacitance

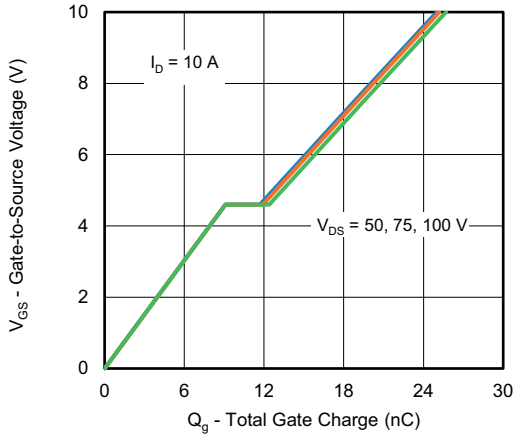

Gate Charge

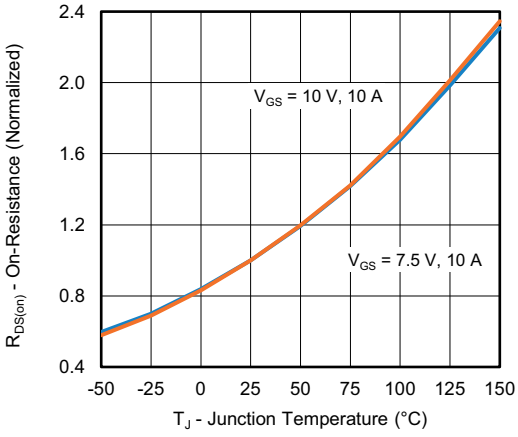

On-Resistance vs. Junction Temperature

For technical questions, contact: pmostechsupport@vishay.com
THIS DOCUMENT IS SUBJECT TO CHANGE WITHOUT NOTICE. THE PRODUCTS DESCRIBED HEREIN AND THIS DOCUMENT ARE SUBJECT TO SPECIFIC DISCLAIMERS, SET FORTH AT www.vishay.com/doc?91000

TYPICAL CHARACTERISTICS (25 °C, unless otherwise noted)

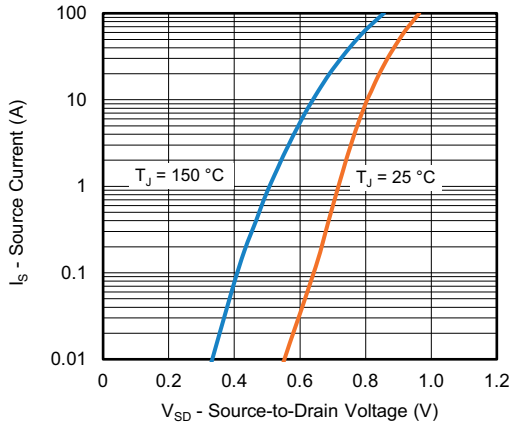

Source-Drain Diode Forward Voltage

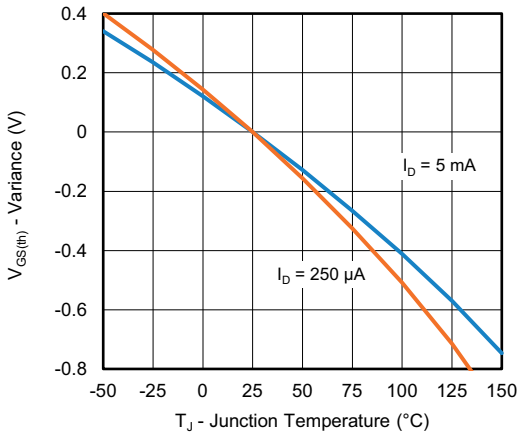

Threshold Voltage

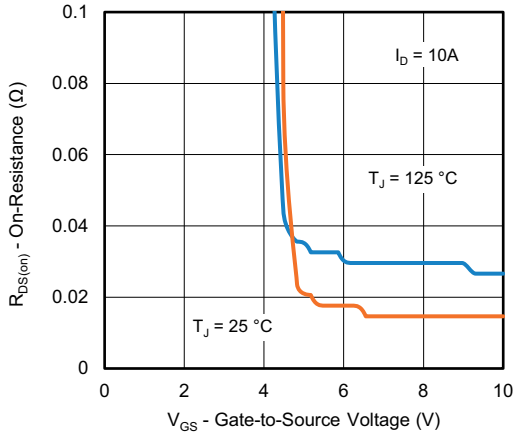

On-Resistance vs. Gate-to-Source Voltage

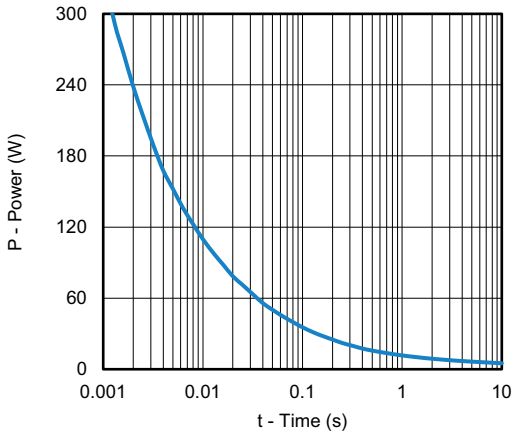

Single Pulse Power, Junction-to-Ambient

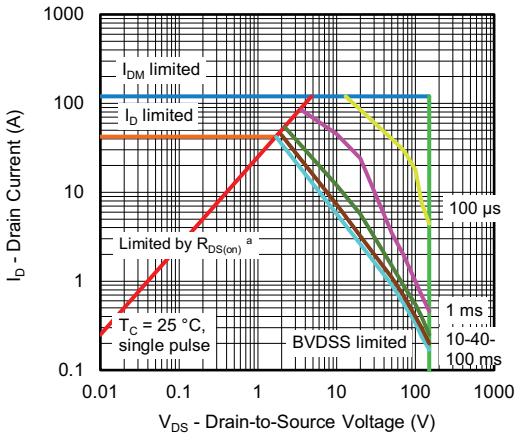

Safe Operating Area, Junction-to-Case

Note

a. V_{GS} > minimum V_{GS} at which $R_{DS(on)}$ is specified

For technical questions, contact: pmostechsupport@vishay.com

THIS DOCUMENT IS SUBJECT TO CHANGE WITHOUT NOTICE. THE PRODUCTS DESCRIBED HEREIN AND THIS DOCUMENT ARE SUBJECT TO SPECIFIC DISCLAIMERS, SET FORTH AT www.vishay.com/doc?91000

TYPICAL CHARACTERISTICS (25 °C, unless otherwise noted)

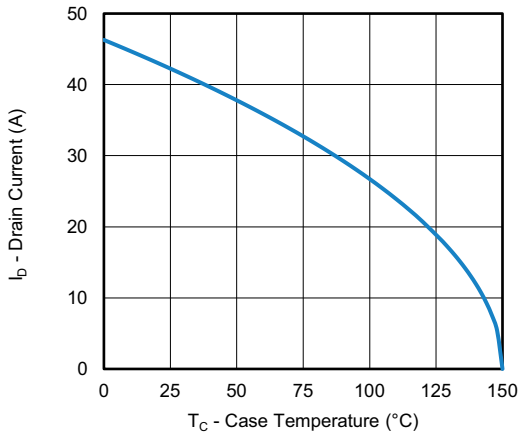

Current Derating [a]

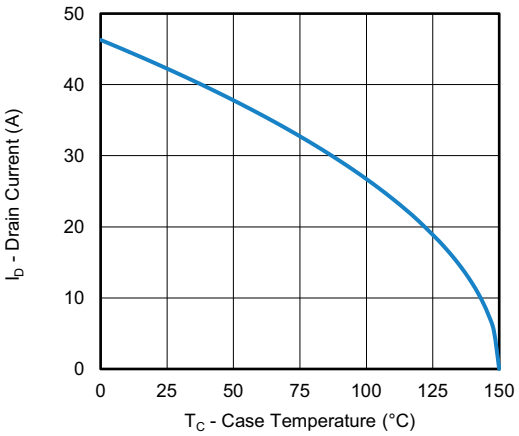

Power, Junction-to-Case

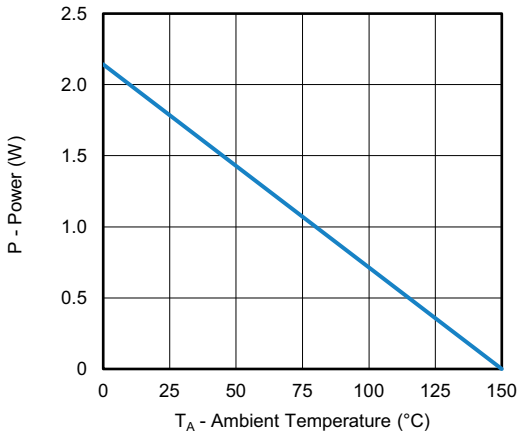

Power, Junction-to-Ambient

Note

a. The power dissipation P_D is based on T_J max. = 150 °C, using junction-to-case thermal resistance, and is more useful in settling the upper dissipation limit for cases where additional heatsinking is used. It is used to determine the current rating, when this rating falls below the package limit

For technical questions, contact: pmostechsupport@vishay.com
THIS DOCUMENT IS SUBJECT TO CHANGE WITHOUT NOTICE. THE PRODUCTS DESCRIBED HEREIN AND THIS DOCUMENT ARE SUBJECT TO SPECIFIC DISCLAIMERS, SET FORTH AT www.vishay.com/doc?91000

TYPICAL CHARACTERISTICS (25 °C, unless otherwise noted)

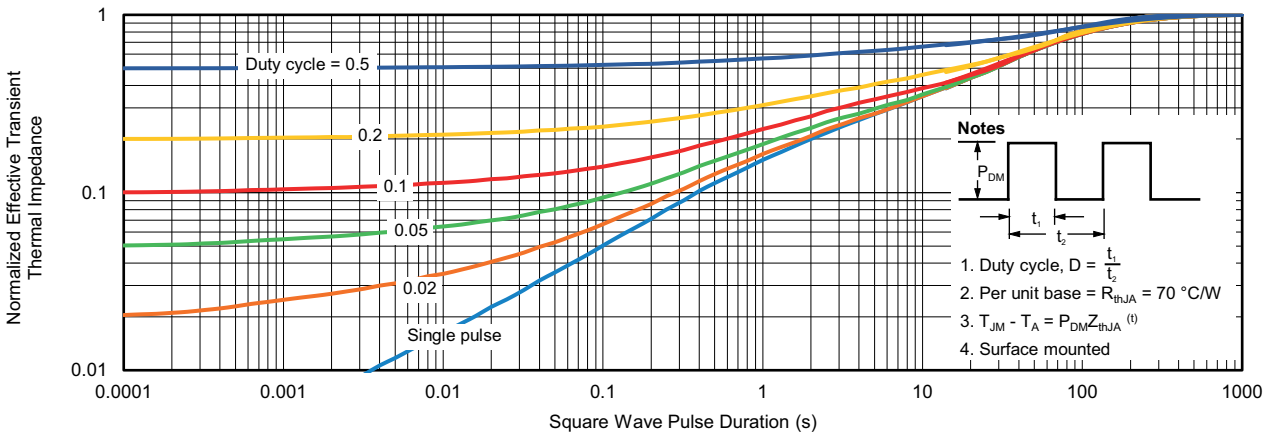

Normalized Thermal Transient Impedance, Junction-to-Ambient

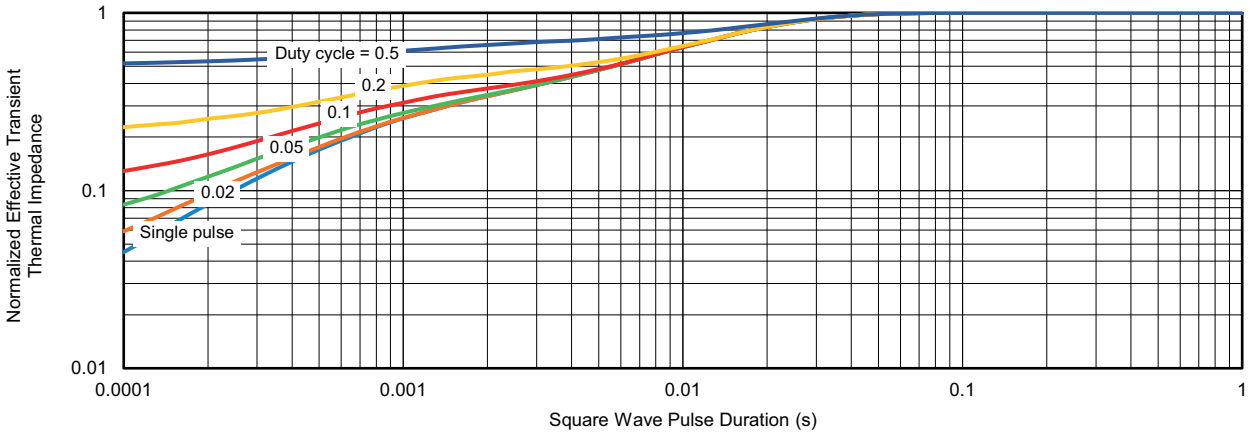

Normalized Thermal Transient Impedance, Junction-to-Case

Vishay Siliconix maintains worldwide manufacturing capability. Products may be manufactured at one of several qualified locations. Reliability data for Silicon Technology and Package Reliability represent a composite of all qualified locations. For related documents such as package / tape drawings, part marking, and reliability data, see www.vishay.com/ppg?63090.

For technical questions, contact: pmostechsupport@vishay.com
THIS DOCUMENT IS SUBJECT TO CHANGE WITHOUT NOTICE. THE PRODUCTS DESCRIBED HEREIN AND THIS DOCUMENT ARE SUBJECT TO SPECIFIC DISCLAIMERS, SET FORTH AT www.vishay.com/doc?91000

PowerPAK® SO-8, (Single/Dual)

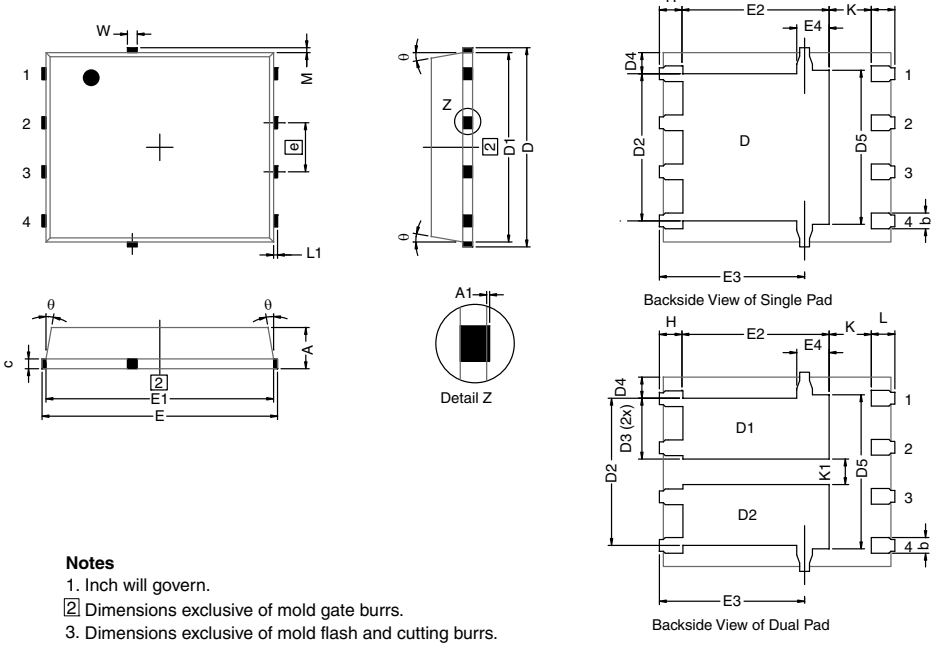

Notes

1. Inch will govern.
2. Dimensions exclusive of mold gate burrs.
3. Dimensions exclusive of mold flash and cutting burrs.

DIM.	MILLIMETERS			INCHES		
	MIN.	NOM.	MAX.	MIN.	NOM.	MAX.
A	0.97	1.04	1.12	0.038	0.041	0.044
A1		-	0.05	0	-	0.002
b	0.33	0.41	0.51	0.013	0.016	0.020
c	0.23	0.28	0.33	0.009	0.011	0.013
D	5.05	5.15	5.26	0.199	0.203	0.207
D1	4.80	4.90	5.00	0.189	0.193	0.197
D2	3.56	3.76	3.91	0.140	0.148	0.154
D3	1.32	1.50	1.68	0.052	0.059	0.066
D4	0.57 typ.			0.0225 typ.		
D5	3.98 typ.			0.157 typ.		
E	6.05	6.15	6.25	0.238	0.242	0.246
E1	5.79	5.89	5.99	0.228	0.232	0.236
E2	3.48	3.66	3.84	0.137	0.144	0.151
E3	3.68	3.78	3.91	0.145	0.149	0.154
E4	0.75 typ.			0.030 typ.		
e	1.27 BSC			0.050 BSC		
K	1.27 typ.			0.050 typ.		
K1	0.56	-	-	0.022	-	-
H	0.51	0.61	0.71	0.020	0.024	0.028
L	0.51	0.61	0.71	0.020	0.024	0.028
L1	0.06	0.13	0.20	0.002	0.005	0.008
θ	0°	-	12°	0°	-	12°
W	0.15	0.25	0.36	0.006	0.010	0.014
M	0.125 typ.			0.005 typ.		
ECN: S17-0173-Rev. L, 13-Feb-17 DWG: 5881						

THIS DOCUMENT IS SUBJECT TO CHANGE WITHOUT NOTICE. THE PRODUCTS DESCRIBED HEREIN AND THIS DOCUMENT ARE SUBJECT TO SPECIFIC DISCLAIMERS, SET FORTH AT www.vishay.com/doc?91000

RECOMMENDED MINIMUM PADS FOR PowerPAK® SO-8 Single

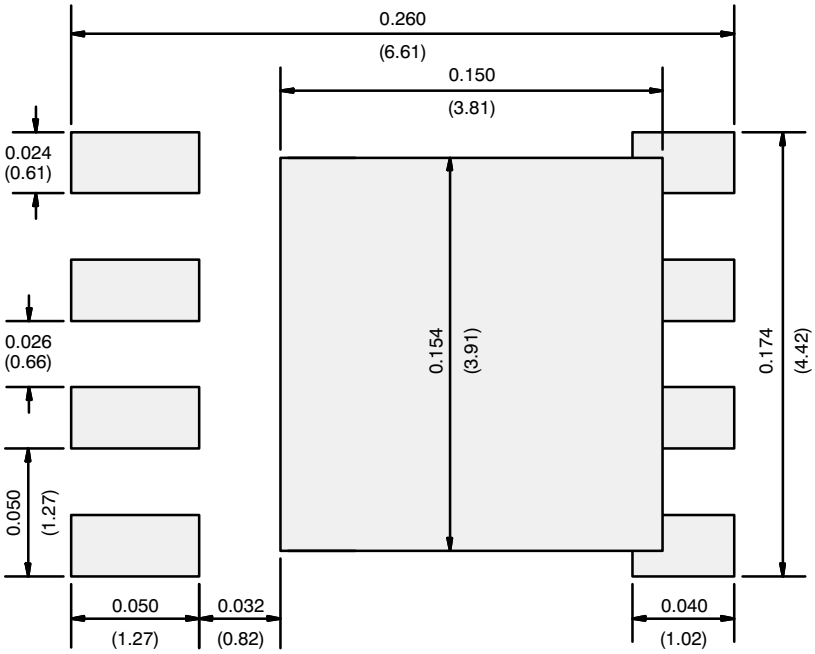

Recommended Minimum Pads
Dimensions in Inches/(mm)

Return to Index

APPLICATION NOTE

Disclaimer

ALL PRODUCT, PRODUCT SPECIFICATIONS AND DATA ARE SUBJECT TO CHANGE WITHOUT NOTICE TO IMPROVE RELIABILITY, FUNCTION OR DESIGN OR OTHERWISE.

Vishay Intertechnology, Inc., its affiliates, agents, and employees, and all persons acting on its or their behalf (collectively, “Vishay”), disclaim any and all liability for any errors, inaccuracies or incompleteness contained in any datasheet or in any other disclosure relating to any product.

Vishay makes no warranty, representation or guarantee regarding the suitability of the products for any particular purpose or the continuing production of any product. To the maximum extent permitted by applicable law, Vishay disclaims (i) any and all liability arising out of the application or use of any product, (ii) any and all liability, including without limitation special, consequential or incidental damages, and (iii) any and all implied warranties, including warranties of fitness for particular purpose, non-infringement and merchantability.

Statements regarding the suitability of products for certain types of applications are based on Vishay's knowledge of typical requirements that are often placed on Vishay products in generic applications. Such statements are not binding statements about the suitability of products for a particular application. It is the customer's responsibility to validate that a particular product with the properties described in the product specification is suitable for use in a particular application. Parameters provided in datasheets and / or specifications may vary in different applications and performance may vary over time. All operating parameters, including typical parameters, must be validated for each customer application by the customer's technical experts. Product specifications do not expand or otherwise modify Vishay's terms and conditions of purchase, including but not limited to the warranty expressed therein.

Hyperlinks included in this datasheet may direct users to third-party websites. These links are provided as a convenience and for informational purposes only. Inclusion of these hyperlinks does not constitute an endorsement or an approval by Vishay of any of the products, services or opinions of the corporation, organization or individual associated with the third-party website. Vishay disclaims any and all liability and bears no responsibility for the accuracy, legality or content of the third-party website or for that of subsequent links.

Vishay products are not designed for use in life-saving or life-sustaining applications or any application in which the failure of the Vishay product could result in personal injury or death unless specifically qualified in writing by Vishay. Customers using or selling Vishay products not expressly indicated for use in such applications do so at their own risk. Please contact authorized Vishay personnel to obtain written terms and conditions regarding products designed for such applications.

No license, express or implied, by estoppel or otherwise, to any intellectual property rights is granted by this document or by any conduct of Vishay. Product names and markings noted herein may be trademarks of their respective owners.

© 2026 VISHAY INTERTECHNOLOGY, INC. ALL RIGHTS RESERVED

THIS DOCUMENT IS SUBJECT TO CHANGE WITHOUT NOTICE. THE PRODUCTS DESCRIBED HEREIN AND THIS DOCUMENT ARE SUBJECT TO SPECIFIC DISCLAIMERS, SET FORTH AT www.vishay.com/doc?91000

ENTEGRECİ

Bu belge www.entegreci.com üzerinden sunulmaktadır.

Elektronik komponent tedarikinde Entegreci

Entegreci, Eskişehir merkezli, Türkiye geneline satış yapan bir elektronik komponent mağazasıdır. Entegreler (IC), mikrodenetleyiciler, transistörler, diyotlar, pasif elemanlar, konnektörler, modüller ve geliştirme kartları tek adetten seri üretim adetlerine kadar satılır. Ürün sayfalarında güncel stok durumunu, fiyatı ve datasheet bağlantısını bulabilirsiniz.

Parça koduyla arama

Üretici parça numarasını yazın; stok ve fiyatı hemen görün.

www.entegreci.com

Ürün kategorileri

Entegreden kapasitöre tüm elektronik komponent kategorileri.

Kategorilere göz atın

Üreticiler

Aradığınız üreticinin ürünlerini tek sayfada inceleyin.

Üreticileri görün

Toplu alım ve teklif

Listede olmayan ya da yüksek adetli parçalar için teklif isteyin.

Teklif isteyin

www.entegreci.com | **destek@entegreci.com** | **0850 305 90 34**

Entegreci is an online electronic components store based in Türkiye. Search by manufacturer part number to see stock, prices and datasheets for integrated circuits, microcontrollers, transistors, passive components and connectors, or request a quote for parts that are not listed.

Bu sayfa Entegreci tarafından eklenmiştir. Belgenin önceki sayfaları asıl yayıncısına aittir ve içeriği değiştirilmemiştir; en güncel sürüm için belgenin yayıncısına başvurun.