3.5 A, 78 mΩ, 2.8 V to 22 V eFuse With Accurate Current Limit, OVP, and Active Reverse Current Blocking

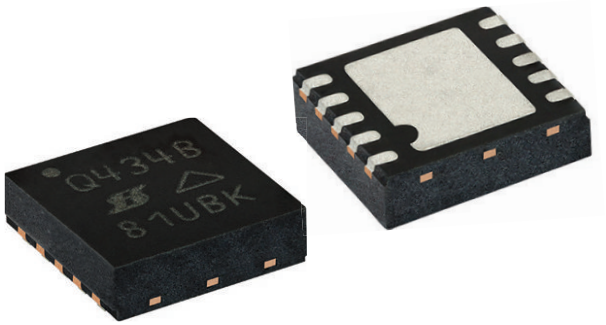

FEATURES

- Qualified for automotive applications
- AEC-Q100 qualified:
  - Device temperature grade 1
  - Device HBM ESD classification level 2
  - Device CDM ESD classification level C4B method 2
- 2.8 V to 22 V operation voltage
- 28 V max. DC tolerance on V_{IN}
- 78 mΩ typical switch resistance
- 0.3 A to 4.5 A current limit setting range
- Current limit accuracy of ± 8 %
- Fast short circuit protection response
- OCP triggering without overhead current
- Programmable turn-on slew rate
- Active reverse current blocking
- Adjustable OVP (and fixed 24 V OVP at V_{IN})
- Adjustable UVLO
- Over-temperature protection
- PGD: power good indicator output
- IEC 62368-1 2018, CB certified, E531343-A6001-CB-1
- Compact TDFN10 3 mm x 3 mm package wettable flank
- 6 A uni-directional parts available with SIPQ32434
- Material categorization: for definitions of compliance please see www.vishay.com/doc?99912

DESCRIPTION

The SIPQ32433A and SIPQ32433B are single channel eFuses protect both power sources and downstream circuitry from excessive inrush currents, overloads, short circuits, over voltage, and Active Reverse Current Blocking which actively suppresses current flowing from the output to the input. They provide increased controllability, reliability, with simplified designs with minimal external components.

V_{IN} overvoltage protection and undervoltage lockout threshold levels can be set with an external resistor network. VIN inrush current can be set with a soft start capacitor. The output current limit can be set by a resistor connected to I_{LIM} pin. I_{LIM} pin voltage can also serve as switch current reporting.

Upon switch-off due to latchable faults, the SIPQ32433A will latch the power switch off and the PGD will remain low. The switch can restart by resetting the EN or V_{IN}. The SIPQ32433B will auto retry if there is no OTP or OVP fault. The retry delay time is 32 times the soft start time set by the CSS.

The switch is characterized for operation over a junction temperature range of -40 °C to +125 °C.

APPLICATIONS

- Automotive infotainment
- ADAS and auto-pilot
- Cameras and sensors
- USB hubs
- Holdup power switching
- Power muxing

TYPICAL APPLICATION CIRCUIT

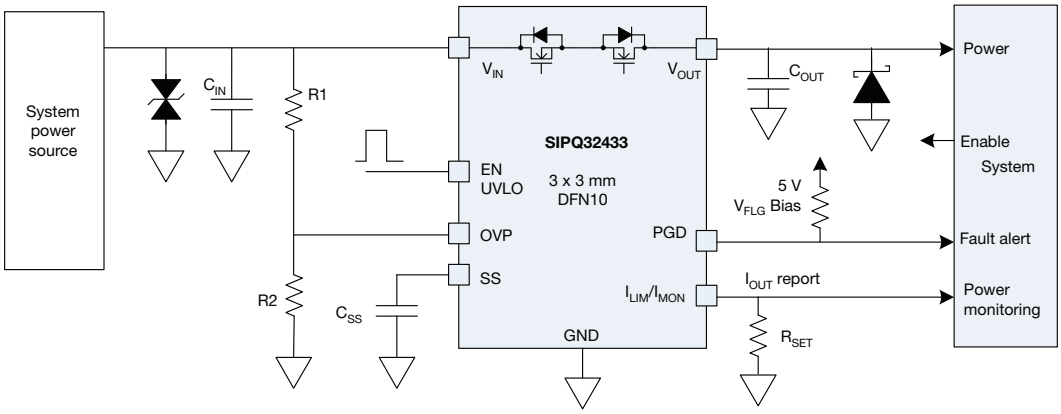

Fig. 1 - Application Circuit

For technical questions, contact: powerictechsupport@vishay.com

THIS DOCUMENT IS SUBJECT TO CHANGE WITHOUT NOTICE. THE PRODUCTS DESCRIBED HEREIN AND THIS DOCUMENT ARE SUBJECT TO SPECIFIC DISCLAIMERS, SET FORTH AT www.vishay.com/doc?91000

ORDERING INFORMATION

PART NUMBER	OCP RESPONSE	$R_{DS(on)}$ (mΩ)	ACTIVE REVERSE CURRENT BLOCKING	REPORT	MARKING CODE	PACKAGE	LEAD FINISH
SIPQ32433ADN-T1E3	Latch	78	Yes	PG	Q433A	DFN10 3 mm x 3 mm	Matte tin
SIPQ32433BDN-T1E3	Auto-retry	78	Yes	PG	Q433B	DFN10 3 mm x 3 mm	
SIP32433AEVB	Evaluation board						
SIP32433BEVB	Evaluation board						

ABSOLUTE MAXIMUM RATINGS

PARAMETER	CONDITION	LIMIT	UNIT
Input voltage (V_{IN})	Reference to GND	-0.3 to +28	V
Output voltage (V_{OUT})	Reference to GND	-0.3 to +28	
		-5 V for +5 µs	
EN voltage	Reference to GND	-0.3 to +24	
OVP	Reference to GND	-0.3 to +6	
SS	Reference to GND	-0.3 to +6	
I_{LIM}		-0.3 to +6	
PGD		-0.3 to +6	
Maximum continuous switch current		3.5	A
Thermal resistance ($_{thJA}$)		44.8	°C/W
ESD rating	HBM	± 1	kV
ESD rating	CDM	± 1	
Latch up current	Per JESD78E, Class II	100	mA
MSL rating		MSL1	
Temperature			
Operating junction temperature		-40 to +150	°C
Storage temperature		-65 to +150	

Stresses beyond those listed under "Absolute Maximum Ratings" may cause permanent damage to the device. These are stress ratings only, and functional operation of the device at these or any other conditions beyond those indicated in the operational sections of the specifications is not implied. Exposure to absolute maximum rating conditions for extended periods may affect device reliability.

RECOMMENDED OPERATING RANGE

ELECTRICAL	LIMIT	UNIT
Input voltage (V_{IN})	2.8 to 22	V
Operating junction temperature	-40 to +125	°C

For technical questions, contact: powerictechsupport@vishay.com

THIS DOCUMENT IS SUBJECT TO CHANGE WITHOUT NOTICE. THE PRODUCTS DESCRIBED HEREIN AND THIS DOCUMENT ARE SUBJECT TO SPECIFIC DISCLAIMERS, SET FORTH AT www.vishay.com/doc?91000

ELECTRICAL SPECIFICATIONS

PARAMETER	SYMBOL	TEST CONDITIONS UNLESS SPECIFIED V_{IN} = 12 V, T_J = -40 °C to +125 °C, $V_{EN(H)}$ = 2.4 V, C_{OUT} = 0.1 µF, R_{LIM} = 4.1 kΩ	LIMITS MIN.	LIMITS TYP.	LIMITS MAX.	UNIT
Power Supply						
V_{IN} max. DC tolerance	$V_{IN(max.)}$		-	-	28	V
V_{IN} operation voltage	V_{IN}	Operating input voltage range	2.8	-	22	V
Quiescent current	$I_{Q(ON)}$	EN = 1.8 V, V_{IN} = 2.8 V to 28 V, V_{OUT} open	-	250	340	µA
Shutdown current	$I_{Q(SD)}$	V_{IN} = 2.8 V to 28 V, EN = 0 V, T_A = 25 °C	-	0.6	5	
OVP switch-off current	$I_{Q(OVP)}$	V_{IN} = 2.8 V to 28 V, EN = 2.4 V, OVP = 1.4 V	-	1	-	
V_{IN} UVLO						
Switch V_{OUT} leakage	I_{UVLO_OUT}		-500	-	+500	nA
Switch V_{IN} leakage	I_{UVLO_IN}		-	27	50	µA
Overvoltage Protection						
OVP threshold	V_{OVP}	V_{IN} = 12 V, OVP rising	1.14	1.2	1.26	V
OVP hysteresis	OVP_{HST}		45	105	140	mV
OVP leakage	I_{OVP}	V_{OVP} = 1.2 V on the pin, T_A = 25 °C	-	40	100	nA
V_{IN} pin internal fixed OVP	IN_{OVP}	T_A = 25 °C	22.1	24	25.6	V
EN / UVLO						
EN on threshold	V_{UVPR}	V_{EN} rising	-	1.25	-	V
EN off threshold	V_{UVPF}	V_{EN} falling	-	1.05	-	
EN / UVLO leakage		V_{EN} = 1.2 V	-0.25	-	+0.25	µA
Soft start bias current	I_{SS}		-	5	-	
Overcurrent Protection						
Current limit voltage threshold	V_{OCP}	Voltage that triggers the OCP shown on I_{LIM} pin	-	0.6	-	V
Current limit accuracy	I_{OCP}	V_{IN} - V_{OUT} = 1 V, R_{SET} = 20.6kΩ	0.255	0.3	0.345	A
		V_{IN} - V_{OUT} = 1 V, R_{SET} = 4.1 kΩ	1.39	1.5	1.6	
		V_{IN} - V_{OUT} = 1 V, R_{SET} = 1.8 kΩ	3.32	3.5	3.68	
Current limit setting range			0.25	-	4.5	
Current limit hold-up time	t_{ILIM}	Current limiting timeout, if no OTP	4	6	8	ms
Active ReverseCurrent Blocking						
V_{IN} - V_{OUT} reverse blocking falling threshold	V_{REVTH}	V_{IN} - V_{OUT}, V_{IN} falling	-30	-20	-5	mV
V_{IN} - V_{OUT} reverse blocking rising threshold	V_{FWDTH}	V_{IN} - V_{OUT}, V_{IN} rising	5	20	30	
Power Switch						
On resistance	$R_{DS(ON)}$	V_{IN} = 3 V to 22 V, I_{OUT} = 1 A, T_J = 25 °C	-	78	100	mΩ
		V_{IN} = 3 V to 22 V, I_{OUT} = 1 A, T_J = 85 °C	-	-	130	
Output leakage at switch off		V_{IN} = 28 V, V_{EN} = 0 V, V_{OUT} = 0 V, sourcing	-	-	5	µA
PGD, Power Good						
PGD pull-down resistance	R_{PG}	V_{IN} = 5 V, output pin = 0.1 V	-	5.2	10	Ω
PGD oll leakage	I_{PG}	Biased with 5 V_{DC}	-	0.01	1	µA

For technical questions, contact: powerictechsupport@vishay.com
THIS DOCUMENT IS SUBJECT TO CHANGE WITHOUT NOTICE. THE PRODUCTS DESCRIBED HEREIN AND THIS DOCUMENT ARE SUBJECT TO SPECIFIC DISCLAIMERS, SET FORTH AT www.vishay.com/doc?91000

SWITCHING CHARACTERISTICS						
PARAMETER	**SYMBOL**	**TEST CONDITIONS UNLESS SPECIFIED** V_{IN} = 12 V, T_J = -40 °C to +125 °C, $V_{EN(H)}$ = 2.4 V, C_{OUT} = 0.1 µF, R_{LIM} = 4.1 kΩ	**LIMITS**			**UNIT**
			MIN.	**TYP.**	**MAX.**	
EN / UVLO						
Switch turn-on delay time	T_{ON_DLY}	From EN / UVLO voltage, V_{UVPR} to V_{OUT} reaches 10 % V_{IN}, R_L = 10 Ω, C_L = 10 µF, C_{SS} open	-	190	-	µs
Shutdown delay	T_{OFF_DLY}	From EN / UVLO low to V_{OUT} = 0.9 x V_{IN}, R_L = 10 Ω, C_L = 10 µF, C_{SS} open	-	10	-	
OVP Timing						
OVP off time	t_{OVP}	R_L = 100 Ω, C_L = 0 µF, OVP steps from 1 V to 1.4 V; measured from OVP pin voltage crossing 1.2 V threshold to V_{OUT} = 0.9 x V_{IN}	-	0.3	1	µs
Internal OVP off time	t_{OVP_INT}	R_L = 100 Ω, C_L = 0 µF, V_{IN} steps from 22 V to 26 V; measured from V_{IN} pin voltage crossing 24 V threshold to V_{OUT} = 0.9 x V_{IN}	-	1.5	-	
Flag reporting delay		PGD pull up to 5 V through a 100 kΩ; delay time from OVP pin voltage step to PGD is below 0.5 V	-	-	2	
Overcurrent protection						
Moderate overcurrent protection	t_{OCP}	Load current is 120 % of current limit threshold	-	1.1	-	µs
Soft Start Control						
Output rise up time	t_R	V_{IN} = 12 V, R_L = 10 Ω, C_L = 10 µF, V_{OUT} from 10 % to 90 % V_{IN}, C_{SS} open	-	350	-	µs
		V_{IN} = 12 V, R_L = 10 Ω, C_L = 10 µF, V_{OUT} from 10 % to 90 % V_{IN}, C_{SS} = 22 nF	-	4.7	-	ms
SS charge current			-	5	-	µA
Auto Retry						
Auto retry count	RTY_{cnt}	Delay time of restart after all faults are removed; this is defined as the number of cycles of soft start time set by C_{SS}	-	32	-	
Thermal Shutdown						
Thermal shutdown		Temperature increases	-	165	-	°C
Thermal shutdown hysteresis			-	45	-	°C

For technical questions, contact: powerictechsupport@vishay.com
THIS DOCUMENT IS SUBJECT TO CHANGE WITHOUT NOTICE. THE PRODUCTS DESCRIBED HEREIN AND THIS DOCUMENT ARE SUBJECT TO SPECIFIC DISCLAIMERS, SET FORTH AT www.vishay.com/doc?91000

PACKAGE OUTLINE

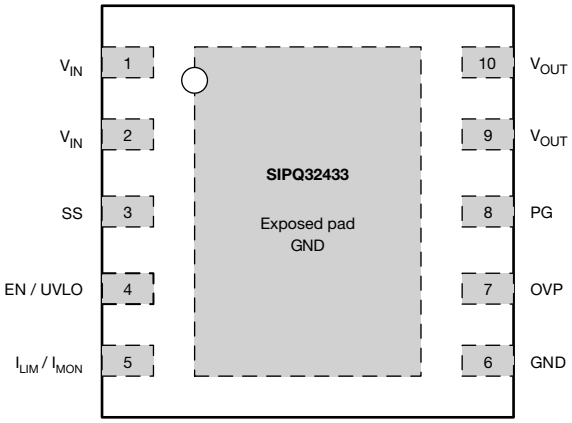

Fig. 2 - Pin Out Drawing (top view)

PIN DESCRIPTION		
PIN #	**NAME**	**FUNCTION**
1, 2	V_{IN}	Power switch input pins; two pins are fused inside the package
3	SS	A capacitor from this pin to GND sets output voltage slew rate
4	EN / UVLO	Active high switch control input; $V_{THL} < 0.3$ V, $V_{THH} > 1.4$ V
5	I_{LIM} / I_{MON}	A resistor from this pin to GND sets the over current and short-circuit current limit; the pin can be used for current reporting, referring to the voltage developed over the current limit setting resistor
6	GND	Ground (internally connected to central exposed pad)
7	OVP	Input for setting the programmable overvoltage protection threshold. An overvoltage event turns-off the internal FET and asserts FLT to indicate the overvoltage fault
8	PGD	Open drain output, asserted when V_{OUT} is ≥ 95 % V_{IN}, and none of the following faults are triggered: OT, OC, OV
9, 10	V_{OUT}	Power switch output pins; two pins are fused inside the package
Exposed pad	GND	The package's central exposed pad must be connected to the ground plane; optimal PCB thermal design will enhance device performance

For technical questions, contact: powerictechsupport@vishay.com
THIS DOCUMENT IS SUBJECT TO CHANGE WITHOUT NOTICE. THE PRODUCTS DESCRIBED HEREIN AND THIS DOCUMENT ARE SUBJECT TO SPECIFIC DISCLAIMERS, SET FORTH AT www.vishay.com/doc?91000

FUNCTIONAL BLOCK DIAGRAM AND TRUTH TABLE

TRUTH TABLE	
EN	**SWITCH**
1	ON
0	OFF

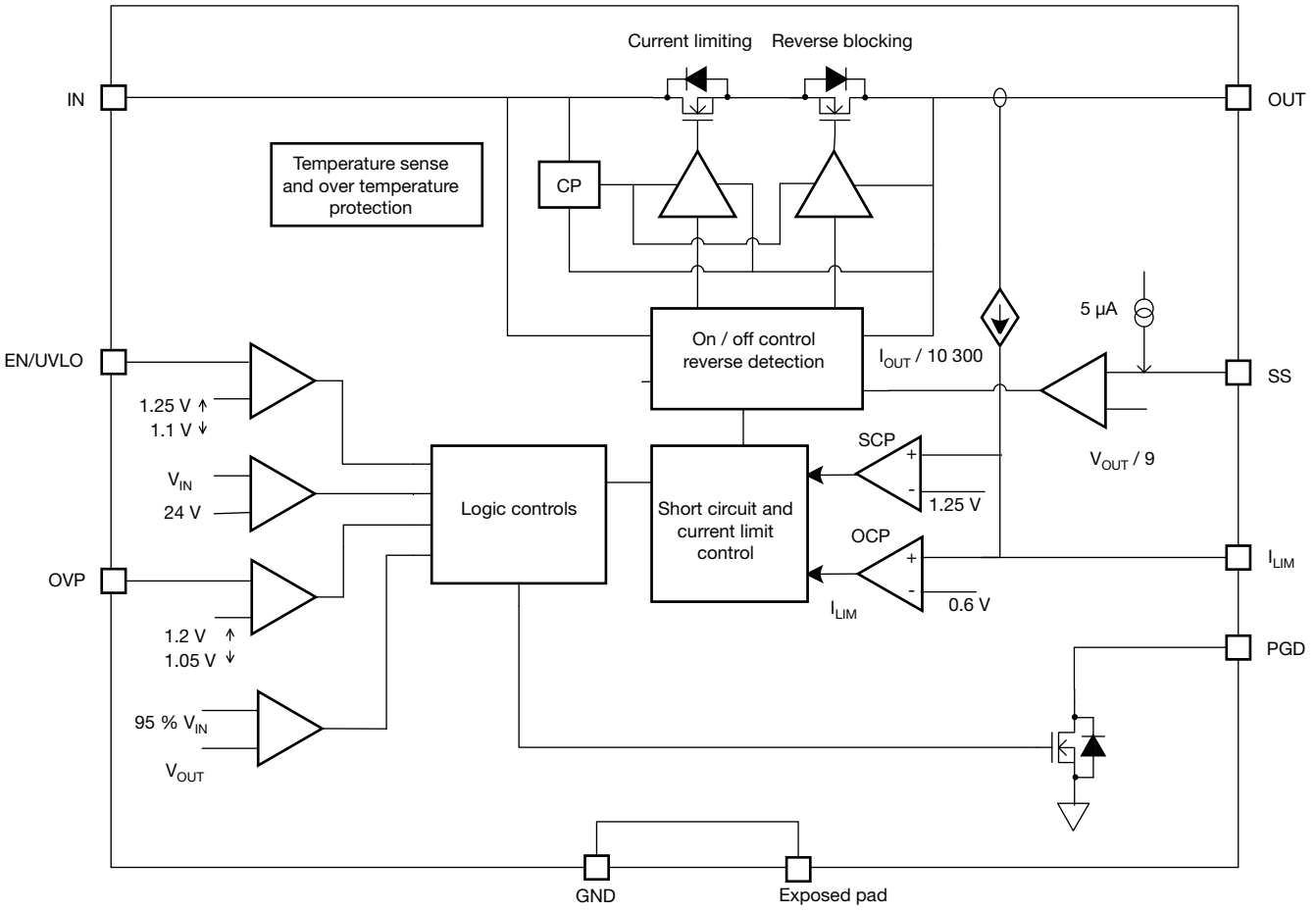

Fig. 3 - Device Block Diagram

For technical questions, contact: powerictechsupport@vishay.com
THIS DOCUMENT IS SUBJECT TO CHANGE WITHOUT NOTICE. THE PRODUCTS DESCRIBED HEREIN AND THIS DOCUMENT ARE SUBJECT TO SPECIFIC DISCLAIMERS, SET FORTH AT www.vishay.com/doc?91000

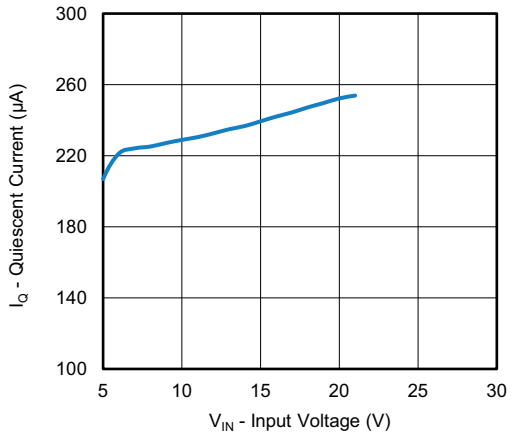

Fig. 4 - Quiescent Current vs. Input

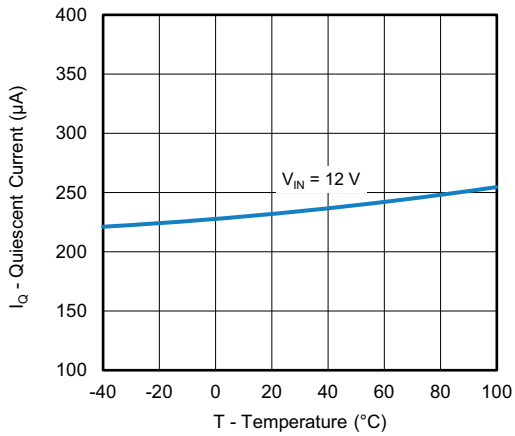

Fig. 5 - Quiescent Current vs. Temperature

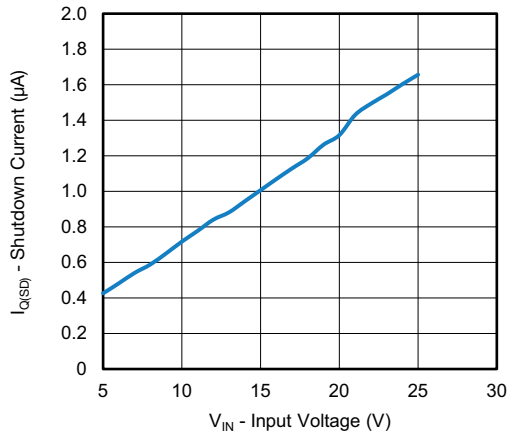

Fig. 6 - Shutdown Current vs. Input

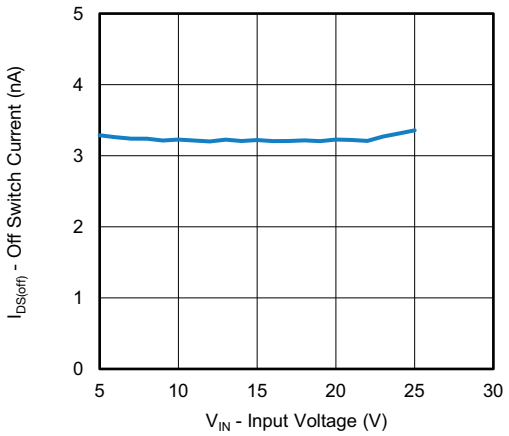

Fig. 7 - Switch Off Current vs. Input

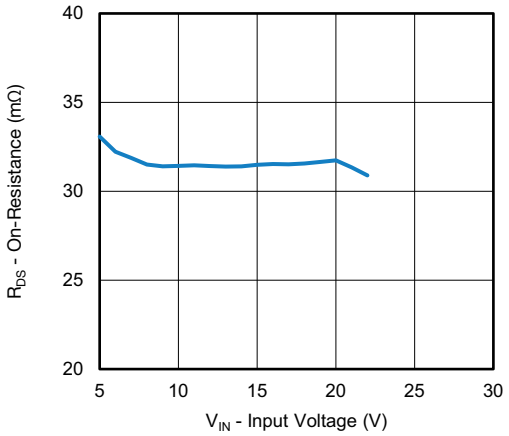

Fig. 8 - On Resistance vs. Input

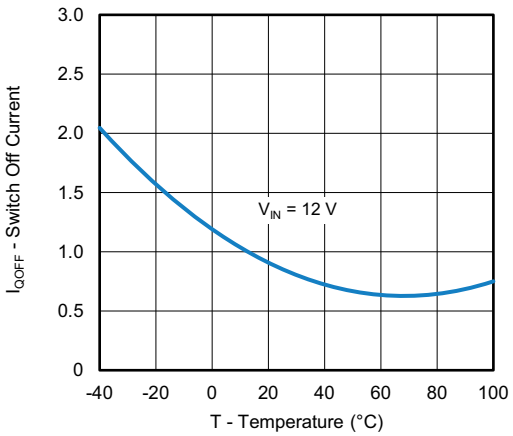

Fig. 9 - Shutdown Current vs. Temperature

For technical questions, contact: powerictechsupport@vishay.com
THIS DOCUMENT IS SUBJECT TO CHANGE WITHOUT NOTICE. THE PRODUCTS DESCRIBED HEREIN AND THIS DOCUMENT ARE SUBJECT TO SPECIFIC DISCLAIMERS, SET FORTH AT www.vishay.com/doc?91000

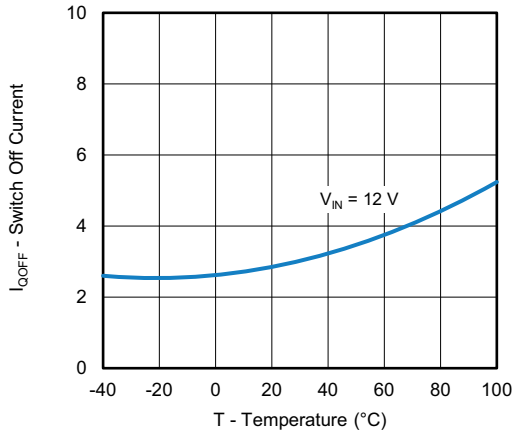

Fig. 10 - Switch Off Current vs. Temperature

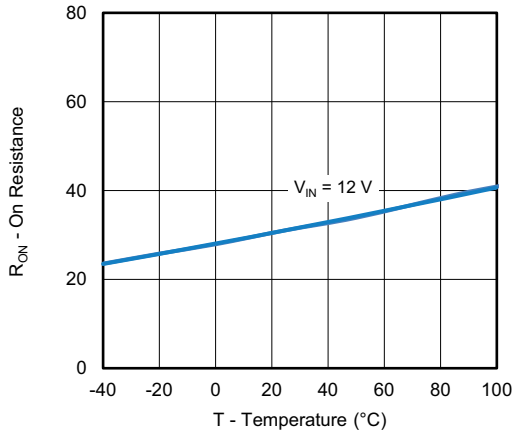

Fig. 11 - On Resistance vs. Temperature

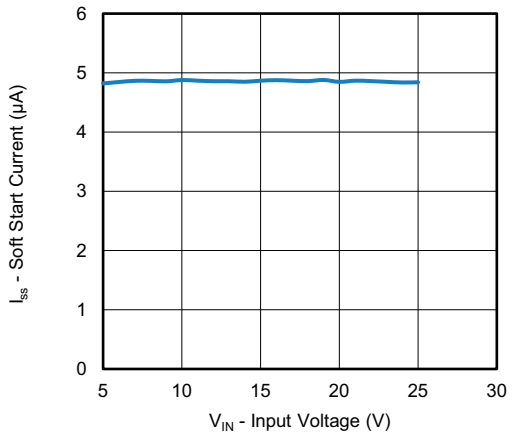

Fig. 12 - Soft Start Current vs. Input Voltage V_{IN}

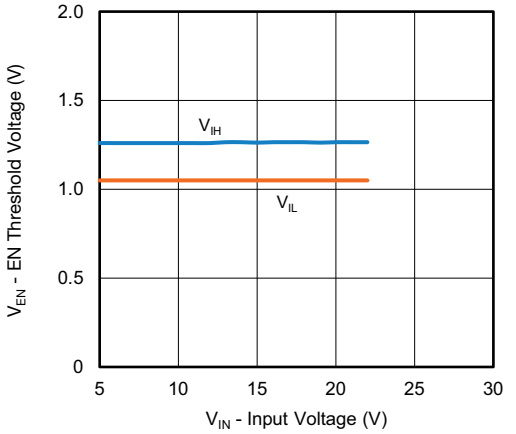

Fig. 13 - Threshold Voltage vs. Input Voltage V_{IN}

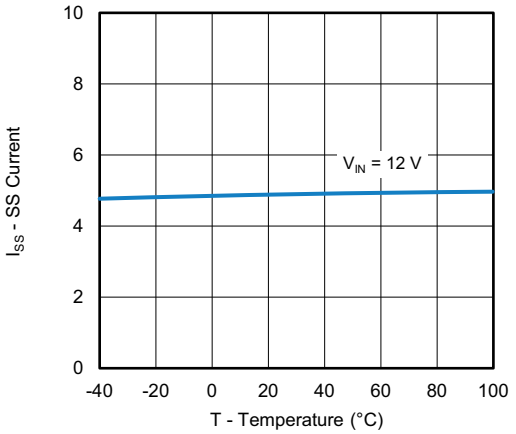

Fig. 14 - Soft Start Current vs. Temperature

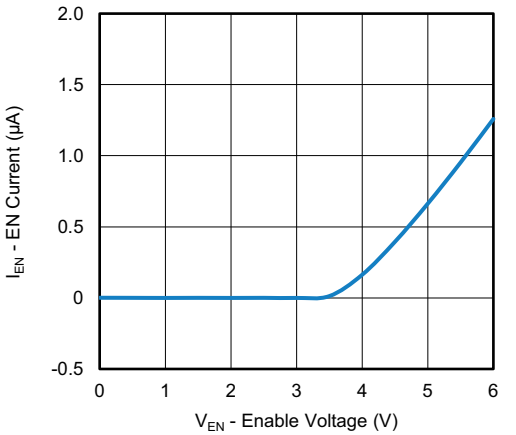

Fig. 15 - EN Current vs. EN Voltage

For technical questions, contact: powerictechsupport@vishay.com
THIS DOCUMENT IS SUBJECT TO CHANGE WITHOUT NOTICE. THE PRODUCTS DESCRIBED HEREIN AND THIS DOCUMENT ARE SUBJECT TO SPECIFIC DISCLAIMERS, SET FORTH AT www.vishay.com/doc?91000

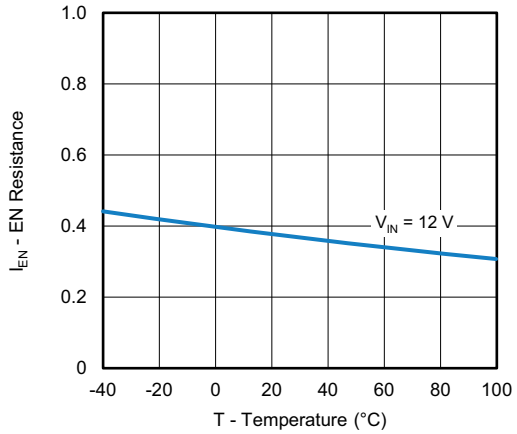

Fig. 16 - Enable Resistance vs. Temperature

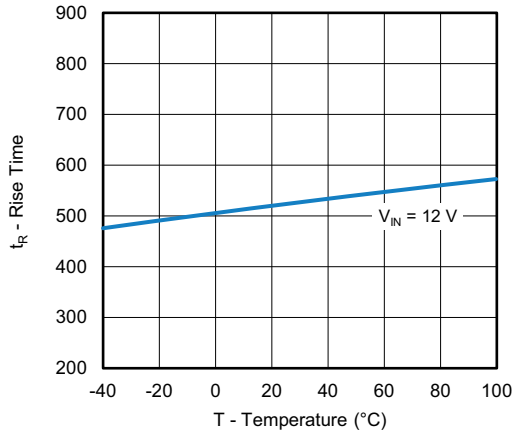

Fig. 17 - Rise Time vs. Temperature

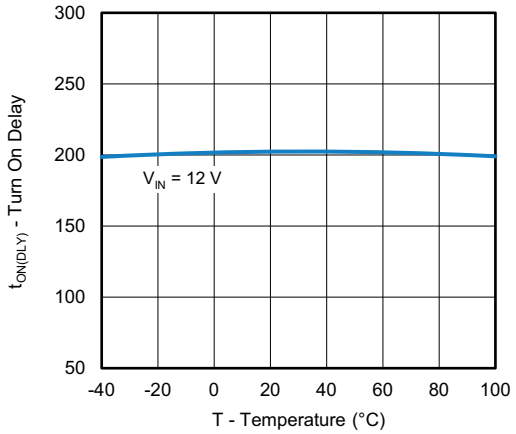

Fig. 18 - Turn On Delay Time vs. Temperature

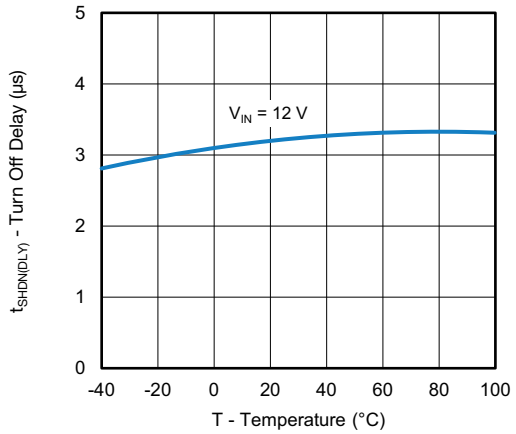

Fig. 19 - Turn Off Delay Time vs. Temperature

For technical questions, contact: powerictechsupport@vishay.com
THIS DOCUMENT IS SUBJECT TO CHANGE WITHOUT NOTICE. THE PRODUCTS DESCRIBED HEREIN AND THIS DOCUMENT ARE SUBJECT TO SPECIFIC DISCLAIMERS, SET FORTH AT www.vishay.com/doc?91000

TYPICAL CHARACTERISTICS

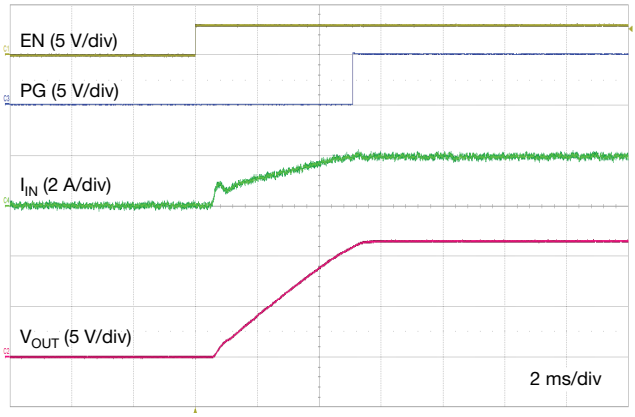

Fig. 20 - Turn On by EN
V_{IN} = 12 V, R_L = 6 Ω, C_L = 47 µF x 3, C_{SS} = 133 nF, R_{LIM} = 2.49 kΩ

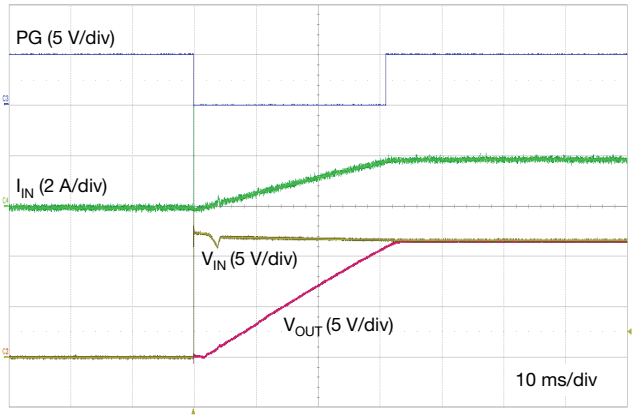

Fig. 23 - Turn On by Hot-Plug of V_{IN}
V_{IN} = 12 V, R_L = 6 Ω, C_L = 47 µF x 3, C_{SS} = 133 nF, R_{LIM} = 2.49 kΩ
EN Voltage Divider Resistors, 1 MΩ and 133 kΩ

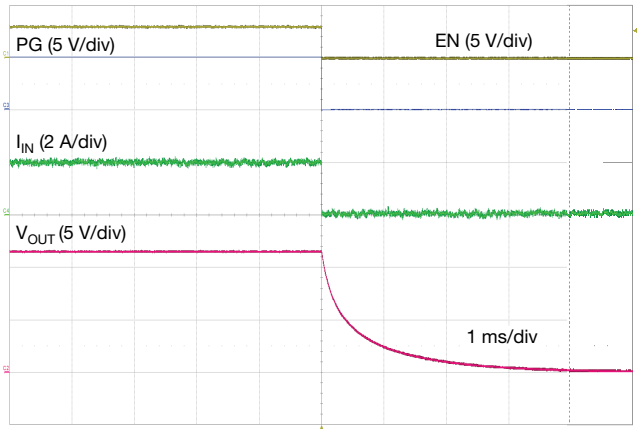

Fig. 21 - Turn Off by EN
V_{IN} = 12 V, R_L = 6 Ω, C_L = 47 µF x 3, C_{SS} = 133 nF, R_{LIM} = 2.49 kΩ

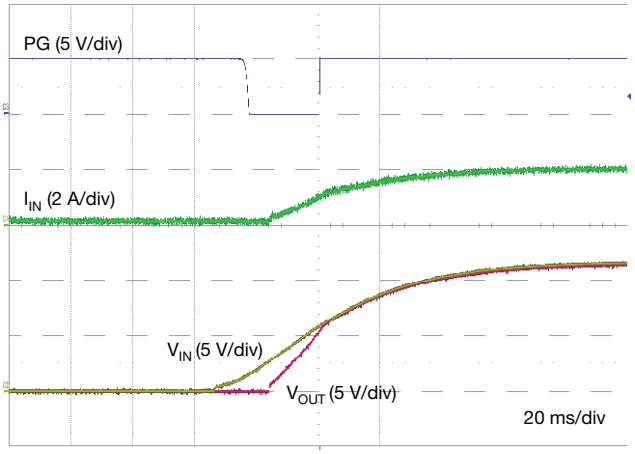

Fig. 24 - Turn On by V_{IN} When EN is 3 V
V_{IN} = 12 V, R_L = 6 Ω, C_L = 47 µF x 3, C_{SS} = 133 nF, R_{LIM} = 2.49 kΩ

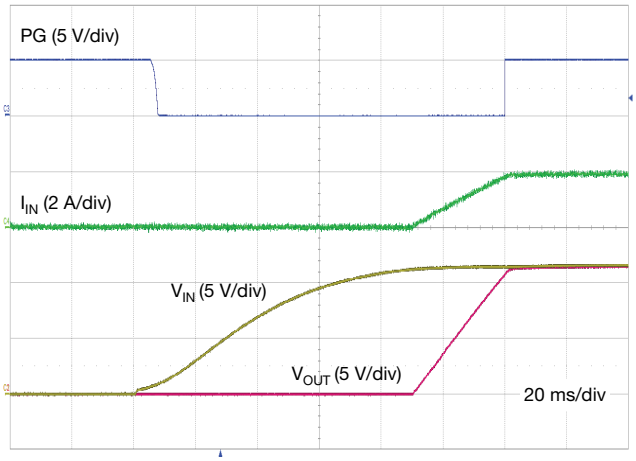

Fig. 22 - Turn On by V_{IN}
V_{IN} = 12 V, R_L = 6 Ω, C_L = 47 µF x 3, C_{SS} = 133 nF, R_{LIM} = 2.49 kΩ
EN Voltage Divider Resistors, 1 MΩ and 133 kΩ

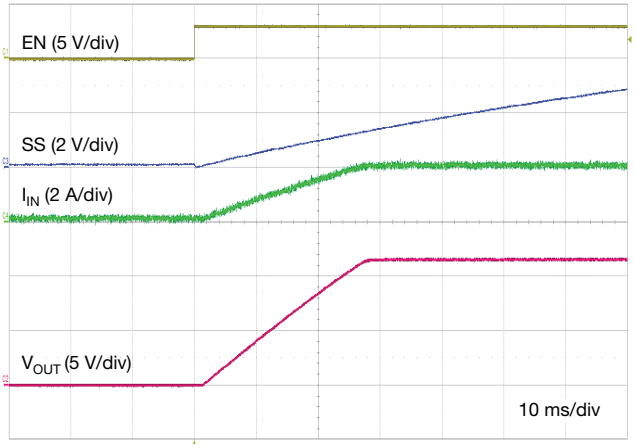

Fig. 25 - Turn On by EN Into Resistive Load
V_{IN} = 12 V, R_L = 6 Ω, C_{SS} = 133 nF, R_{LIM} = 2.49 kΩ

For technical questions, contact: powerictechsupport@vishay.com
THIS DOCUMENT IS SUBJECT TO CHANGE WITHOUT NOTICE. THE PRODUCTS DESCRIBED HEREIN AND THIS DOCUMENT ARE SUBJECT TO SPECIFIC DISCLAIMERS, SET FORTH AT www.vishay.com/doc?91000

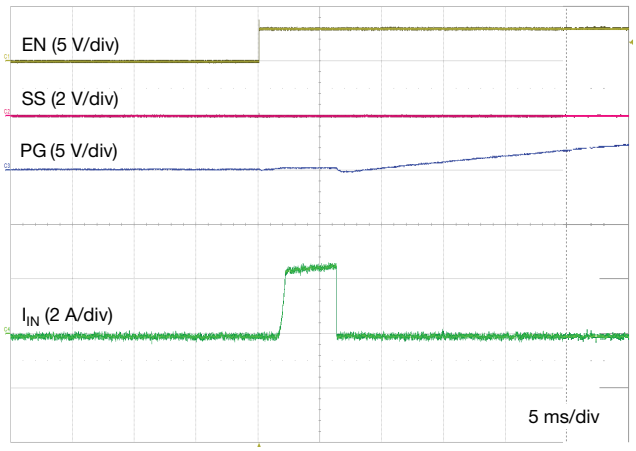

Fig. 26 - Turn On Into Output Short
V_{IN} = 12 V, C_{SS} = 133 nF, R_{LIM} = 2.49 kΩ

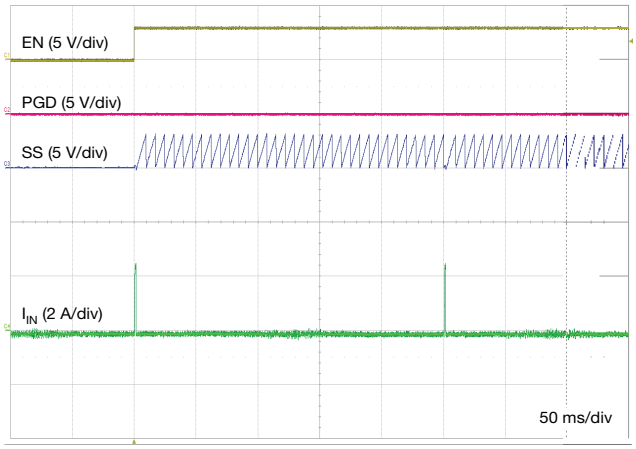

Fig. 27 - Turn On Into Output Short, Auto-Retry
V_{IN} = 12 V, C_{SS} = 133 nF, R_{LIM} = 2.49 kΩ

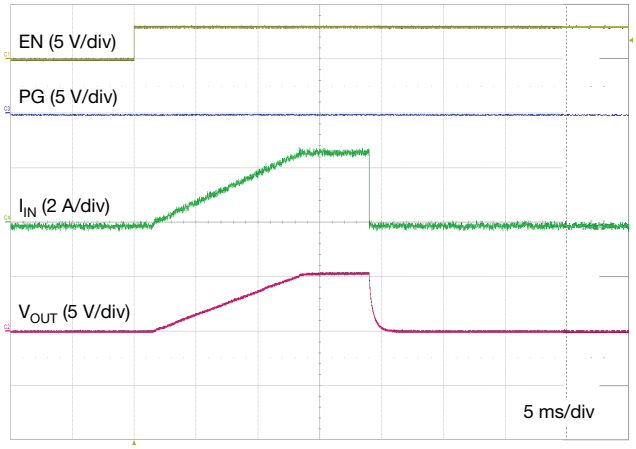

Fig. 28 - Turn On by EN Into OCP Load
V_{IN} = 12 V, R_L = 2 Ω, C_L = 47 µF x 3, C_{SS} = 133 µF, R_{LIM} = 2.49 kΩ

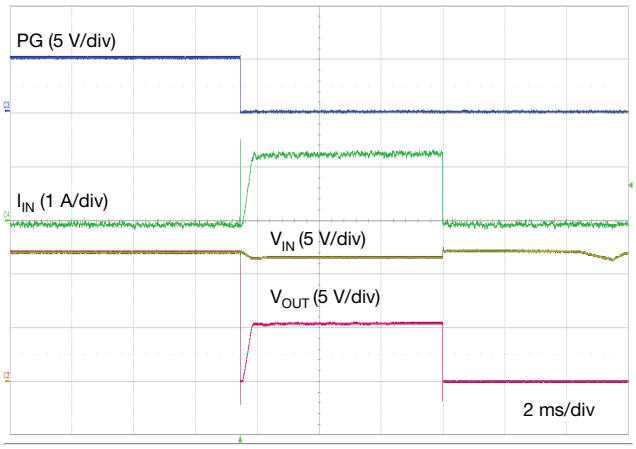

Fig. 29 - V_{OUT} Short With a 2 Ω, Load
V_{IN} = 12 V, R_L = 2 Ω, C_L = 0 µF, C_{SS} = 133 nF, R_{LIM} = 2.49 kΩ

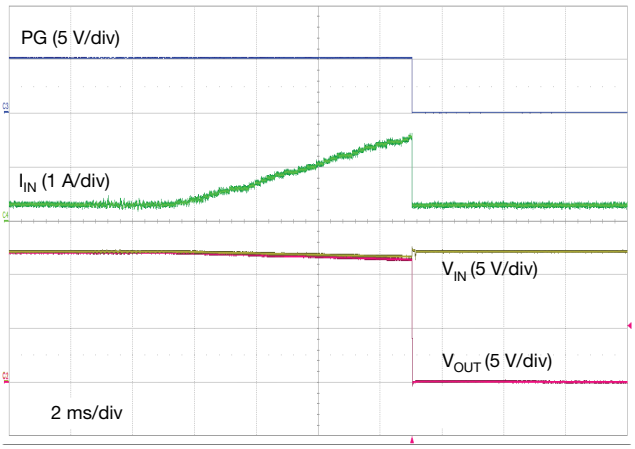

Fig. 30 - Output Current Protection
Increase Load Current Slowly
V_{IN} = 12 V, R_L = 2 Ω, C_L = 47 nF, C_{SS} = 133 nF, R_{LIM} = 2.49 kΩ

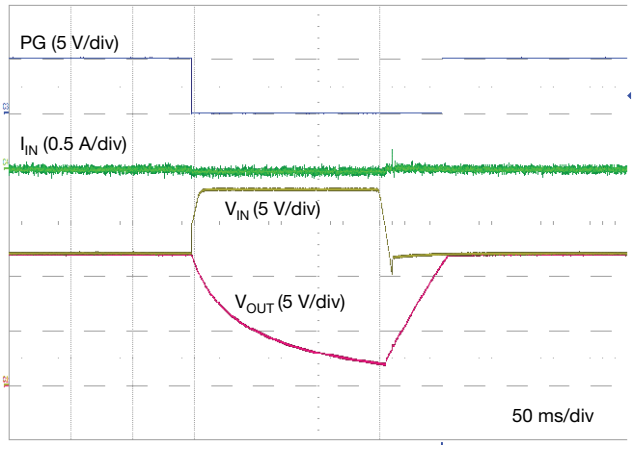

Fig. 31 - Over Voltage Protection
R_L = 1 kΩ, C_L = 100 µF, C_{SS} = 133 nF, R_{LIM} = 2.49 kΩ,
OVP Set to 18 V

For technical questions, contact: powerictechsupport@vishay.com
THIS DOCUMENT IS SUBJECT TO CHANGE WITHOUT NOTICE. THE PRODUCTS DESCRIBED HEREIN AND THIS DOCUMENT ARE SUBJECT TO SPECIFIC DISCLAIMERS, SET FORTH AT www.vishay.com/doc?91000

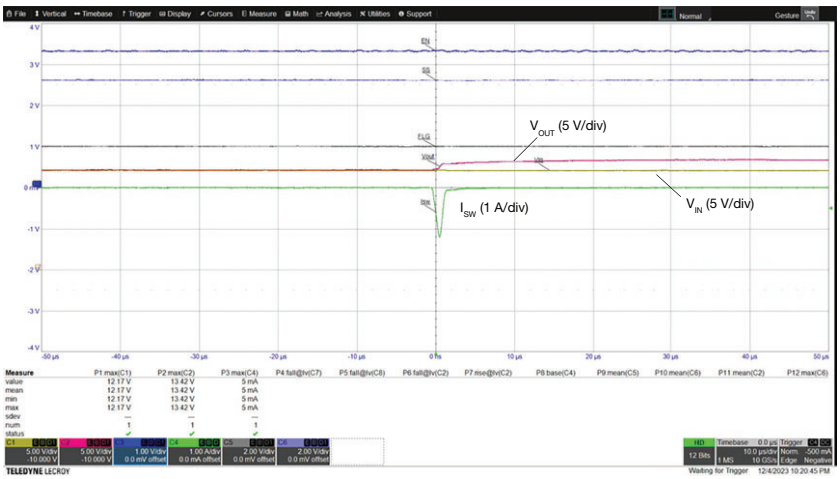

Fig. 32 - Active Reverse Current Blocking
V_{IN} = 12 V, V_{OUT} Raised Up to 13.5 V

OPERATION

The SIPQ32433A and SIPQ32433B are 78 mΩ switches designed to operate in the 2.8 V to 22 V range. The V_{IN} maximum DC tolerance is 28 V.

The devices start their operation by checking the V_{IN}, V_{OUT}, OVP, and EN / UVLO pins. When the voltages are within the operation ranges, the PGD open drain switch is off. The PGD is high through an external pull high resistor. A high level on the EN / UVLO pin turns on the soft start current source charging CSS and enables internal MOSFET gate driver control the V_{OUT} to follow SS voltage at 9 times ratio. In case of OCP during soft start, the switch current will be regulated to the set current limit level.

After a successful turn-on sequence, the device now actively monitors its load current, input voltage, and protects the load from harmful over-current, and over-voltage conditions. A built-in thermal sense circuit will detect junction over temperature and shut down the switch for safety.

SWITCH ON / OFF, AND UNDER-VOLTAGE LOCKOUT PROTECTION - UVLO

EN / UVLO pin controls the on / off of the power switch. When EN / UVLO is at a logic high the switch is on. When EN / UVLO is at a logic low, the switch is off.

The SIPQ32433A and SIPQ32433B implement under-voltage protection on the EN / UVLO to turn off the output. It is a user-defined under-voltage protection setting to flexibly select the proper minimum applied voltage for the downstream load or the device's proper operation.

The diagram shows how a resistor divider from supply to GND can be used to set the UVLO set point for a given voltage supply level.

For technical questions, contact: powerictechsupport@vishay.com
THIS DOCUMENT IS SUBJECT TO CHANGE WITHOUT NOTICE. THE PRODUCTS DESCRIBED HEREIN AND THIS DOCUMENT ARE SUBJECT TO SPECIFIC DISCLAIMERS, SET FORTH AT www.vishay.com/doc?91000

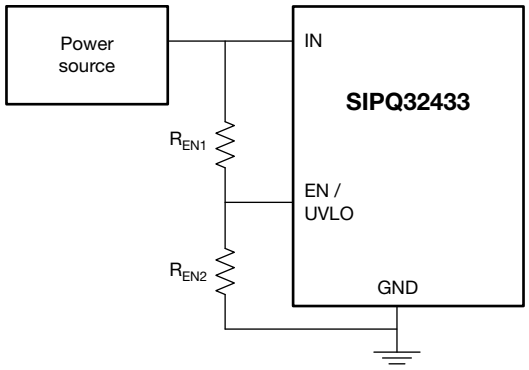

Fig. 33

The resistors must be sized large enough to minimize the constant leakage from supply to ground through the resistor divider network. At the same time, keep the current through the resistor network sufficiently larger than the leakage current on the EN / UVLO pin to minimize the error in the resistor divider ratio.

$$R_{EN1} = \frac{R_{EN2}(V_{IN} - V_{UVPR})}{V_{UVPR}}$$

Where V_{UVPR} is 1.25 V.

UVLO turn off delay (T_{OFF_DLY}) is typically 550 µs and turn on delay T_{ON_DLY} is typically 500 µs.

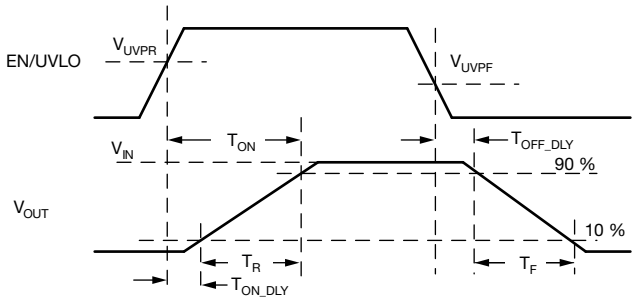

Fig. 34 - Switching Times

INRUSH CURRENT, AND OVER-CURRENT PROTECTION

The SIPQ32433A and SIPQ32433B incorporate two protections against over-current:

- Adjustable slew rate (SR) for inrush current control
- Adjustable over-current protection / active current limit to protect against overload conditions

The over-current protection (OCP) is active also during soft start. The over-current protection circuit controls the switch impedance to limit the current to the level programmed by the R_{SET} resistor.

If the over-current condition persists for more than 6 ms (typ.), the switch shuts off and alert the drain FLG is asserted, pulling the pin to GND.

For technical questions, contact: powerictechsupport@vishay.com
THIS DOCUMENT IS SUBJECT TO CHANGE WITHOUT NOTICE. THE PRODUCTS DESCRIBED HEREIN AND THIS DOCUMENT ARE SUBJECT TO SPECIFIC DISCLAIMERS, SET FORTH AT www.vishay.com/doc?91000

SLEW RATE CONTROL

An inrush current happens when the switch turns on into a large output capacitance. If the inrush current is not controlled, it can damage the input connectors and / or cause the system power supply to droop, leading to unexpected restarts elsewhere in the system.

The SIPQ32433A and SIPQ32433B provide integrated output slew rate control to manage the inrush current during start-up. This is achieved by forcing the V_{OUT} to follow the voltage on a soft start capacitor. A constant current source of 5 µA charges the C_{SS}, generating a linear ramp up voltage on C_{SS}.

$$V_{OUT} = 9 \times V_{SS}$$

The inrush current is proportional to the load capacitance and rising slew rate. The following equations can be used to calculate the C_{SS} and slew rate required to limit the inrush current (I_{INRUSH}) for a given load capacitance (C_{OUT}):

$$SR\ (V/ms) = \frac{I_{INRUSH}\ (mA)}{C_{OUT}\ (\mu F)}$$

$$SR = \frac{I_{SS}}{C_{SS}} \times 9$$

$$T_{SS} = \frac{V_{IN}}{SR} = V_{IN} \times \frac{C_{OUT}\ (\mu F)}{I_{INRUSH}\ (mA)}$$

Inrush current should be controlled well below 20 % of set current limit, and within the device SOA.

The fastest output slew rate is achieved by leaving the soft start pin open.

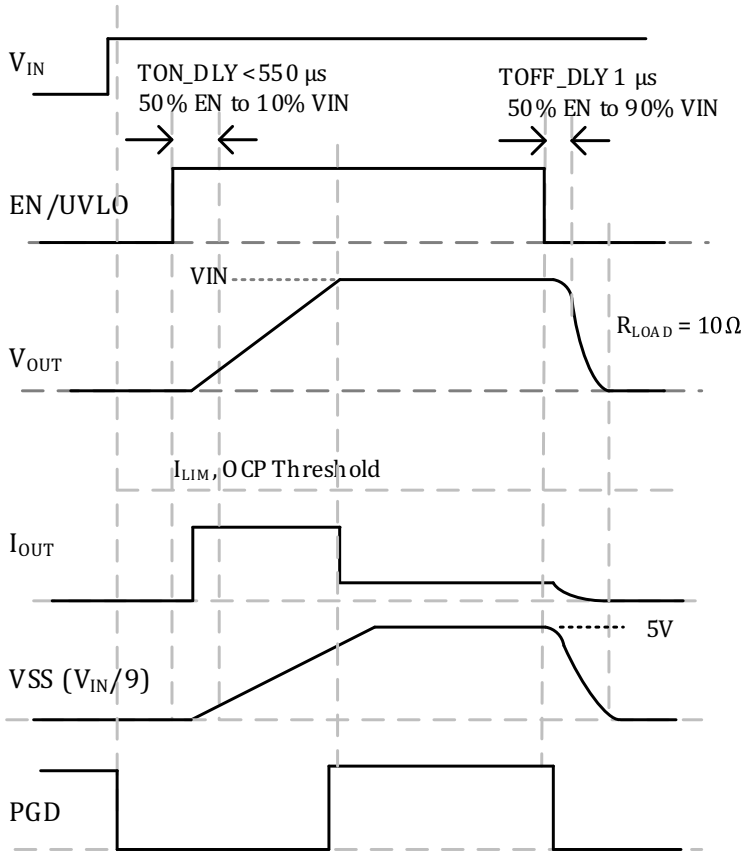

PGD is pulled through a resistor to an external voltage source

Fig. 35

For technical questions, contact: powerictechsupport@vishay.com
THIS DOCUMENT IS SUBJECT TO CHANGE WITHOUT NOTICE. THE PRODUCTS DESCRIBED HEREIN AND THIS DOCUMENT ARE SUBJECT TO SPECIFIC DISCLAIMERS, SET FORTH AT www.vishay.com/doc?91000

CURRENT LIMIT SETTING

The SIPQ32433A and SIPQ32433B actively monitor the current flow through the switch and provide a quick response to over-current conditions by actively regulating the current to a set limit. The current limit is set by connecting a resistor between the I_{LIM} pin and GND. R_{SET} can be calculated by the following formula for a desired current limit:

$$I_{LIM} = \frac{V_{OCP}}{R_{SET}} \times 10\,300$$

V_{OCP} is 0.6 V.

When the load current exceeds the threshold (I_{LIM}), the parts respond within 1 µs (typ.) to turn off the switch and then regulate the switch gate voltage to limit the output current to the set I_{LIM} level. During this brief period before the over-current protection circuit is engaged, the parts will see a surge current, especially under a severe output short condition. The magnitude of the surge current developed during the period when the over-current protection is not engaged is determined by impedance in the loop from the input current source to ground and the response time. This impedance is the sum total of the current source impedance, the path resistance and inductance, and the load impedance.

If the over-current condition persists for more than 6 ms / typ., the switch shuts off. When V_{OUT} falls below 95 % of V_{IN}, the PGD is pulled low. The device will exit current limiting when the load current falls below I_{LIM} before the end of the current limit period. The control circuit will increase the gate drive in the same manner as the soft start when the switch exits from the current limit mode.

The I_{LIMIT} / I_{MON} pin can also be used for current reporting. The output path should be of high impedance to prevent any disruption to the current limit circuitry.

The current limit mode could result in excessive power on the switch, which increases the T_J quickly. The SIPQ32433A and SIPQ32433B have OTP, providing an enhanced level of production.

Once the device is off due to OCP or OTP faults, the SIPQ32433A stays in the latch-off state and the SIPQ32433B auto-retries after 32 times of the programmed soft start time. They can be reset by toggling V_{IN} or EN / UVLO.

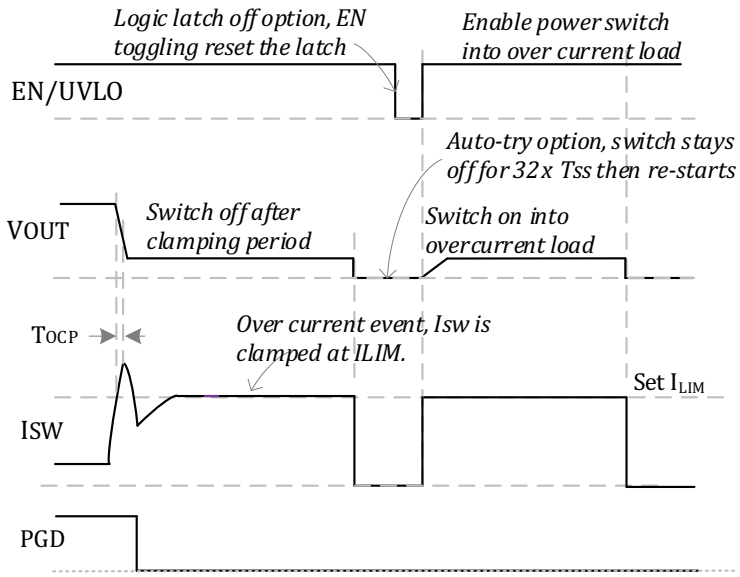

Fig. 36 - Over-Current Protection

For technical questions, contact: powerictechsupport@vishay.com
THIS DOCUMENT IS SUBJECT TO CHANGE WITHOUT NOTICE. THE PRODUCTS DESCRIBED HEREIN AND THIS DOCUMENT ARE SUBJECT TO SPECIFIC DISCLAIMERS, SET FORTH AT www.vishay.com/doc?91000

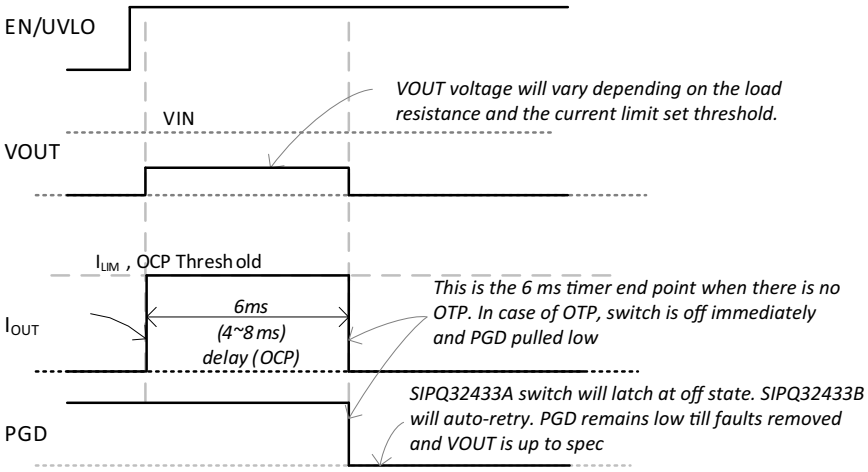

Fig. 37 - Turn On Into Over-Current Load

For technical questions, contact: powerictechsupport@vishay.com
THIS DOCUMENT IS SUBJECT TO CHANGE WITHOUT NOTICE. THE PRODUCTS DESCRIBED HEREIN AND THIS DOCUMENT ARE SUBJECT TO SPECIFIC DISCLAIMERS, SET FORTH AT www.vishay.com/doc?91000

Active Reverse Current Blocking

The SIPQ32433A and SIPQ32433B feature ARCB (active reverse current blocking) ideal diode operation. When V_{OUT} is detected higher than V_{IN} by V_{RCB} (20 mV typ.) the switch is turned off. The TRCB response time t_{RCB} is 300 ns ($V_{OUT} - V_{IN}$ = 100 mV) and 3 µs ($V_{OUT} - V_{IN}$ = 3 mV. TRCB is a non-latchable fault. Once V_{OUT} falls below the TRCB recovery threshold (V_{RCBR} 20 mV typically), the switch will turn on without soft start procedure. The SIP32419B also blocks the current from V_{OUT} to V_{IN} when V_{IN} is short to GND. When the switch is disabled, current flow is blocked in both directions.

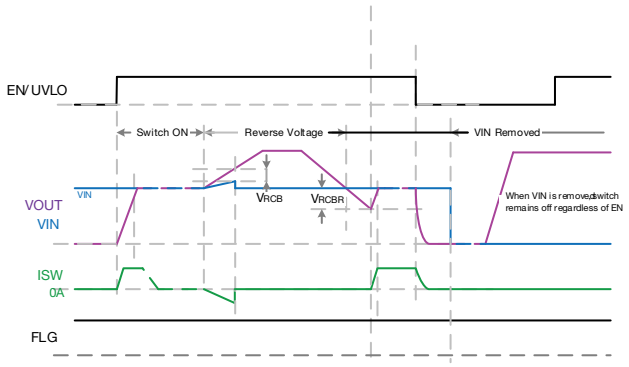

FLG remains high on this event

Fig. 38 - Active Reverse Current Blocking

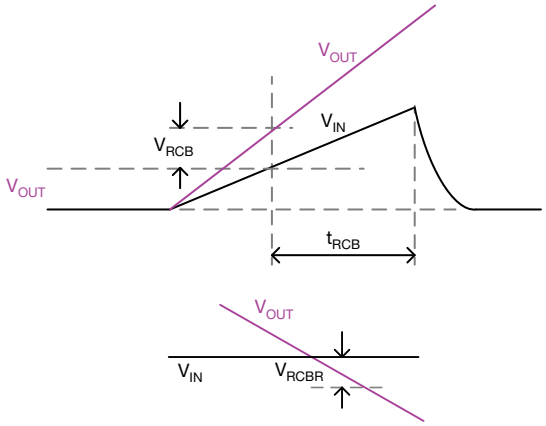

Fig. 39 - Active Reverse Current Blocking

OVER-VOLTAGE PROTECTION (OVP)

The SIPQ32433A and SIPQ32433B implement overvoltage protection (OVP) on both the V_{IN} and OVP pins to protect the output load in the event of an input over-voltage. When the input exceeds the over-voltage protection thresholds $V_{OVP(R)}$ or the IN_{OVP}, which is typically 24 V, the device turns off the output within t_{OVP}, while the open drain PGD asserts in the meantime. As long as an over-voltage condition is present on the input, the device stays disabled with the output turned off. Over-voltage is a non-latchable fault. Once the input voltage returns to the normal operating range, the device attempts to start up normally.

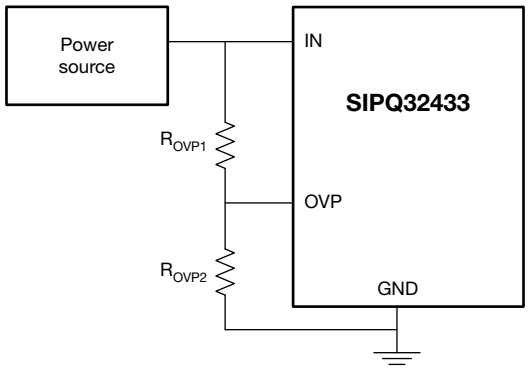

Fig. 40

$$\frac{R_{OVP1}}{R_{OVP2}} = \frac{V_{IN(OVP)} - 1.2\ V}{1.2\ V}$$

OVP voltage divider resistors total resistance should not be over 2.5 MΩ.

For technical questions, contact: powerictechsupport@vishay.com
THIS DOCUMENT IS SUBJECT TO CHANGE WITHOUT NOTICE. THE PRODUCTS DESCRIBED HEREIN AND THIS DOCUMENT ARE SUBJECT TO SPECIFIC DISCLAIMERS, SET FORTH AT www.vishay.com/doc?91000

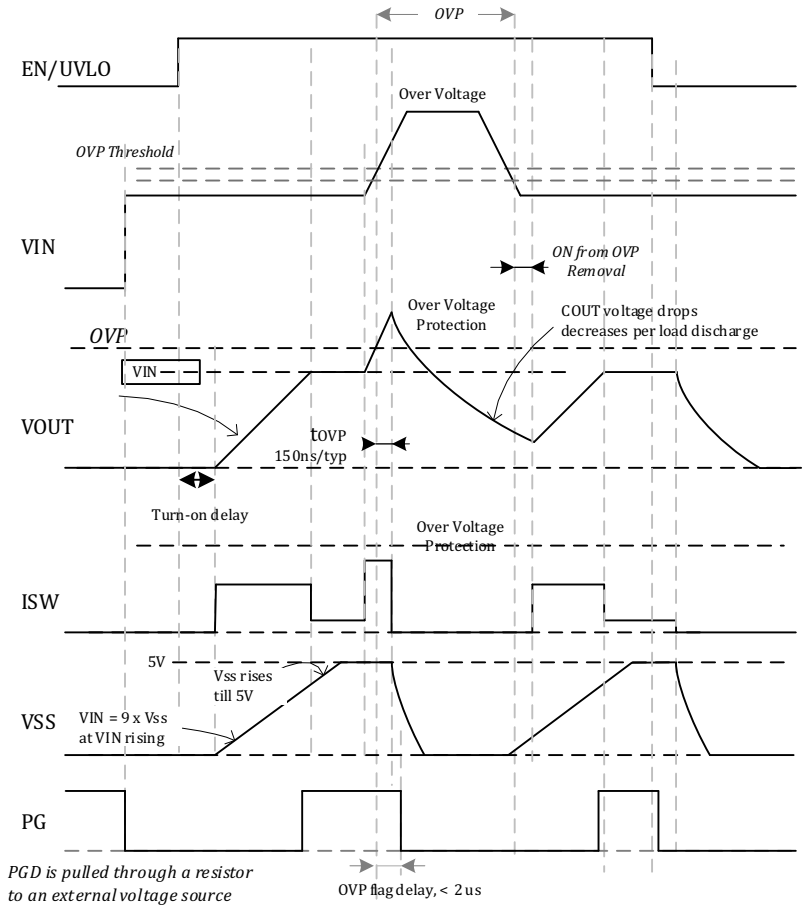

Fig. 41 - Over-Voltage Protection

OTP, OVER-TEMPERATURE PROTECTION

Over-temperature protection turns off the power switch when the die temperature reaches the OTP threshold of 165 °C. The hysteresis is 45 °C. When the die temperature drops below 120 °C, it is allowed to turn on again.

PGD, POWER GOOD REPORTING

PGD is an open drain output. Connect an external pull-up resistor to 3.3 V or 5 V.. It is asserted low when V_{OUT} is below 95 % of V_{IN}, an over-current, over-voltage, or over-temperature fault condition occurs.

INPUT CAPACITOR

A 2.2 µF or larger C_{IN} is recommended. It should be placed as physically close to the device's input pins and ground to be effective to minimize transients on the input. Ceramic capacitors are recommended over tantalum because of their ability to withstand input current surges from low impedance sources such as batteries. For hot-plug applications, where input path inductance is negligible, this input capacitor can be minimized or eliminated.

OUTPUT CAPACITOR

The SIP32433A and SIP32433B do not require an output capacitor for proper operation. Still, a proper value C_{OUT} is recommended to accommodate load transient per circuit design requirements. There are no ESR or capacitor type requirements.

Protection

For technical questions, contact: powerictechsupport@vishay.com
THIS DOCUMENT IS SUBJECT TO CHANGE WITHOUT NOTICE. THE PRODUCTS DESCRIBED HEREIN AND THIS DOCUMENT ARE SUBJECT TO SPECIFIC DISCLAIMERS, SET FORTH AT www.vishay.com/doc?91000

LAYOUT GUIDELINES

The SIPQ32433A and SIPQ32433B are protection switches designed to maintain a constant output load current upon over-current fault. Optimized layout with efficient heat sinking is critical. It is recommended to put as much copper as possible to the devices' central exposed pad which is connected to ground. Connect all ground planes with all possible thermal VIAs.

The circuit setting components should be laid close to their connection pins. The components include current limit setting resistor, soft start setting capacitor, and resistors connected to EN / UVLO and OVP pins.

Protection devices such as input TVS or output Schottky diodes must be located close the pins to be protected and routed with short traces to reduce inductance.

Below is a layout example.

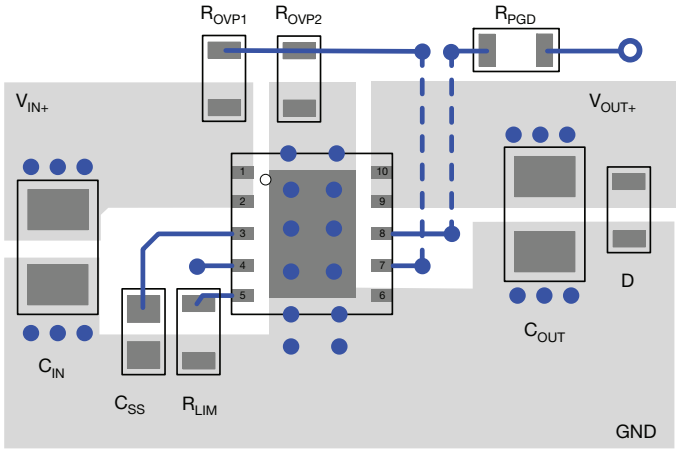

Fig. 42

For technical questions, contact: powerictechsupport@vishay.com
THIS DOCUMENT IS SUBJECT TO CHANGE WITHOUT NOTICE. THE PRODUCTS DESCRIBED HEREIN AND THIS DOCUMENT ARE SUBJECT TO SPECIFIC DISCLAIMERS, SET FORTH AT www.vishay.com/doc?91000

PRODUCT SUMMARY		
Part number	SiPQ32433A	SiPQ32433B
Description	3.5 A, 78 mΩ, 2.8 V to 22 V eFuse with accurate current limit, OVP, and active reverse current blocking	3.5 A, 78 mΩ, 2.8 V to 22 V eFuse with accurate current limit, OVP, and active reverse current blocking
Configuration	Single	Single
Slew rate time (µs)	Adjustable	Adjustable
On delay time (µs)	190	190
Input voltage min. (V)	2.8	2.8
Input voltage max. (V)	28	28
On-resistance at input voltage min. (mΩ)	78	78
On-resistance at input voltage max. (mΩ)	78	78
Quiescent current at input voltage min. (µA)	180	180
Quiescent current at input voltage max. (µA)	250	250
Output discharge (yes / no)	N	N
Reverse blocking (yes / no)	Active Reverse Current Blocking	Active Reverse Current Blocking
Continuous current (A)	3.5	3.5
Package type	DFN33 10L wettable flank	DFN33 10L wettable flank
Package size (W, L, H) (mm)	3.0 x 3.0 x 0.9	3.0 x 3.0 x 0.9
Status code	1	1
Product type	Slew rate, current limit	Slew rate, current limit
Applications	Automotive infotainment, ADAS and auto pilot, cameras and sensors, USB hubs, holdup power switching, power muxing	Automotive infotainment, ADAS and auto pilot, cameras and sensors, USB hubs, holdup power switching, power muxing

Vishay Siliconix maintains worldwide manufacturing capability. Products may be manufactured at one of several qualified locations. Reliability data for Silicon Technology and Package Reliability represent a composite of all qualified locations. For related documents such as package / tape drawings, part marking, and reliability data, see www.vishay.com/ppg?62096.

For technical questions, contact: powerictechsupport@vishay.com

THIS DOCUMENT IS SUBJECT TO CHANGE WITHOUT NOTICE. THE PRODUCTS DESCRIBED HEREIN AND THIS DOCUMENT ARE SUBJECT TO SPECIFIC DISCLAIMERS, SET FORTH AT www.vishay.com/doc?91000

Disclaimer

ALL PRODUCT, PRODUCT SPECIFICATIONS AND DATA ARE SUBJECT TO CHANGE WITHOUT NOTICE TO IMPROVE RELIABILITY, FUNCTION OR DESIGN OR OTHERWISE.

Vishay Intertechnology, Inc., its affiliates, agents, and employees, and all persons acting on its or their behalf (collectively, “Vishay”), disclaim any and all liability for any errors, inaccuracies or incompleteness contained in any datasheet or in any other disclosure relating to any product.

Vishay makes no warranty, representation or guarantee regarding the suitability of the products for any particular purpose or the continuing production of any product. To the maximum extent permitted by applicable law, Vishay disclaims (i) any and all liability arising out of the application or use of any product, (ii) any and all liability, including without limitation special, consequential or incidental damages, and (iii) any and all implied warranties, including warranties of fitness for particular purpose, non-infringement and merchantability.

Statements regarding the suitability of products for certain types of applications are based on Vishay's knowledge of typical requirements that are often placed on Vishay products in generic applications. Such statements are not binding statements about the suitability of products for a particular application. It is the customer's responsibility to validate that a particular product with the properties described in the product specification is suitable for use in a particular application. Parameters provided in datasheets and / or specifications may vary in different applications and performance may vary over time. All operating parameters, including typical parameters, must be validated for each customer application by the customer's technical experts. Product specifications do not expand or otherwise modify Vishay's terms and conditions of purchase, including but not limited to the warranty expressed therein.

Hyperlinks included in this datasheet may direct users to third-party websites. These links are provided as a convenience and for informational purposes only. Inclusion of these hyperlinks does not constitute an endorsement or an approval by Vishay of any of the products, services or opinions of the corporation, organization or individual associated with the third-party website. Vishay disclaims any and all liability and bears no responsibility for the accuracy, legality or content of the third-party website or for that of subsequent links.

Vishay products are not designed for use in life-saving or life-sustaining applications or any application in which the failure of the Vishay product could result in personal injury or death unless specifically qualified in writing by Vishay. Customers using or selling Vishay products not expressly indicated for use in such applications do so at their own risk. Please contact authorized Vishay personnel to obtain written terms and conditions regarding products designed for such applications.

No license, express or implied, by estoppel or otherwise, to any intellectual property rights is granted by this document or by any conduct of Vishay. Product names and markings noted herein may be trademarks of their respective owners.

© 2026 VISHAY INTERTECHNOLOGY, INC. ALL RIGHTS RESERVED

THIS DOCUMENT IS SUBJECT TO CHANGE WITHOUT NOTICE. THE PRODUCTS DESCRIBED HEREIN AND THIS DOCUMENT ARE SUBJECT TO SPECIFIC DISCLAIMERS, SET FORTH AT www.vishay.com/doc?91000

ENTEGRECİ

Bu belge www.entegreci.com üzerinden sunulmaktadır.

Elektronik komponent tedarikinde Entegreci

Entegreci, Eskişehir merkezli, Türkiye geneline satış yapan bir elektronik komponent mağazasıdır. Entegreler (IC), mikrodenetleyiciler, transistörler, diyotlar, pasif elemanlar, konnektörler, modüller ve geliştirme kartları tek adetten seri üretim adetlerine kadar satılır. Ürün sayfalarında güncel stok durumunu, fiyatı ve datasheet bağlantısını bulabilirsiniz.

Parça koduyla arama

Üretici parça numarasını yazın; stok ve fiyatı hemen görün.

www.entegreci.com

Ürün kategorileri

Entegreden kapasitöre tüm elektronik komponent kategorileri.

Kategorilere göz atın

Üreticiler

Aradığınız üreticinin ürünlerini tek sayfada inceleyin.

Üreticileri görün

Toplu alım ve teklif

Listede olmayan ya da yüksek adetli parçalar için teklif isteyin.

Teklif isteyin

www.entegreci.com | **destek@entegreci.com** | **0850 305 90 34**

Entegreci is an online electronic components store based in Türkiye. Search by manufacturer part number to see stock, prices and datasheets for integrated circuits, microcontrollers, transistors, passive components and connectors, or request a quote for parts that are not listed.

Bu sayfa Entegreci tarafından eklenmiştir. Belgenin önceki sayfaları asıl yayıncısına aittir ve içeriği değiştirilmemiştir; en güncel sürüm için belgenin yayıncısına başvurun.