SI-3000LSA Series Surface-Mount, Low Current Consumption, Low Dropout Voltage

■Features

- Compact surface-mount package (SOP8)
- Output current: 1 A
- Low circuit current at output OFF: Iq(OFF) ≤ 1 μA (V_C = 0 V)
- Low dropout voltage: V_{DIF}≤0.8 V (at I_O = 1 A)
  V_{DIF} ≤1.2 V (I_O = 1 A) for SI-3018LSA
- 4 types of output voltages (1.8 V, 2.5 V, 3.3 V, 5.0 V) available
- Output ON/OFF control terminal voltage compatible with LS-TTL
- Built-in foldback-type-overcurrent and thermal protection circuits

■Absolute Maximum Ratings

(T_a=25°C)

Parameter	Symbol	Ratings	Unit
DC Input Voltage	V_{IN}	16	V
Output control terminal voltage	V_C	V_{IN}	V
DC Output Current	I_O	1	A
Power Dissipation	P_{D1}*1	1.16	W
	P_{D2}*2	1.1	W
Junction Temperature	T_j*3	–30 to +150	°C
Operating Ambient Temperature	T_{op}	–30 to +150	°C
Storage Temperature	T_{stg}	–30 to +150	°C
Thermal Resistance (Junction to Lead (pin 8))	$\theta_{j\text{-}L}$	36	°C/W
Thermal Resistance (Junction to Ambient Air)	$\theta_{j\text{-}a}$*2	100	°C/W

*1: When mounted on glass-epoxy board 56.5 × 56.5 mm (copper laminate area 100%).
*2: When mounted on glass-epoxy board 40 × 40 mm (copper laminate area 100%).
*3: Thermal protection circuits may be activated if the junction temperature exceeds 135°C.

■Applications

- Auxiliary power supplies for PC
- Battery-driven electronic equipment

■Recommended Operating Conditions

Parameter	Symbol	Ratings				Unit
		SI-3018LSA	SI-3025LSA	SI-3033LSA	SI-3050LSA	
DC Input Voltage Range	V_{IN}	3.1 to 3.5*1	*2 to 3.5*1	*2 to 5.2*1	*2 to 8.0	V
DC Output Current Range	I_O	0 to 1				A
Operating Junction Temperature	T_{jop}	–20 to +125				°C
Operating Ambient Temperature	T_{aop}	–30 to +85				°C

*1: V_{IN} (max) and I_O (max) are restricted by the relation $P_D = (V_{IN} - V_O) \times I_O$.
Please calculate these values referring to the reference data on page 71.
*2: Refer to the Dropout Voltage parameter.

■Electrical Characteristics

(T_a=25°C, V_C=2V, unless otherwise specified)

Parameter		Symbol	Ratings												Unit
			SI-3018LSA			SI-3025LSA			SI-3033LSA			SI-3050LSA			
			min.	typ.	max.	min.	typ.	max.	min.	typ.	max.	min.	typ.	max.	
Output Voltage		V_O	1.764	1.800	1.836	2.450	2.500	2.550	3.234	3.300	3.366	4.90	5.00	5.10	V
		Conditions	V_{IN}=3.3V, I_O=0.5A			V_{IN}=3.3V, I_O=0.5A			V_{IN}=5V, I_O=0.5A			V_{IN}=6V, I_O=0.5A			
Dropout Voltage		V_{DIF}		–				0.4			0.4			0.4	V
		Conditions		–		I_O≤0.5A			I_O≤0.5A			I_O≤0.5A			
				0.6	1.2			0.8			0.8			0.8	
		Conditions	I_O≤1A												
Line Regulation		ΔV_{LINE}		2	10		2	10		3	10		3	15	mV
		Conditions	V_{IN}=3.1 to 3.5V, I_O=0.3A			V_{IN}=3.1 to 3.5V, I_O=0.3A			V_{IN}=4.5 to 5.5V, I_O=0.3A			V_{IN}=6 to 7V, I_O=0.3A			
Load Regulation		ΔV_{OLOAD}		10	20		10	20		10	20		10	30	mV
		Conditions	V_{IN}=3.3V, I_O=0 to 1A			V_{IN}=3.3V, I_O=0 to 1A			V_{IN}=5V, I_O=0 to 1A			V_{IN}=6V, I_O=0 to 1A			
Temperature Coefficient of Output Voltage		$\Delta V_O/\Delta T_a$		±0.3			±0.3			±0.3			±0.5		mV/°C
		Conditions	V_{IN}=3.3V, I_O=5mA, T_j=0 to 100°C			V_{IN}=3.3V, I_O=5mA, T_j=0 to 100°C			V_{IN}=5V, I_O=5mA, T_j=0 to 100°C			V_{IN}=6V, I_O=5mA, T_j=0 to 100°C			
Ripple Rejection		R_{REJ}		60			57			55			55		dB
		Conditions	V_{IN}=3.3V, f=100 to 120Hz			V_{IN}=3.3V, f=100 to 120Hz			V_{IN}=5V, f=100 to 120Hz			V_{IN}=6V, f=100 to 120Hz			
Quiescent Circuit Current		I_q		1.7	2.5		1.7	2.5		1.7	2.5		1.7	2.5	mA
		Conditions	V_{IN}=3.3V, I_O=0A			V_{IN}=3.3V, I_O=0A			V_{IN}=5V, I_O=0A			V_{IN}=6V, I_O=0A			
Circuit Current at Output OFF		I_q(OFF)			1			1			1			1	μA
		Conditions	V_{IN}=3.3V, I_O=0A, V_C=0V			V_{IN}=3.3V, I_O=0A, V_C=0V			V_{IN}=5V, I_O=0A, V_C=0V			V_{IN}=6V, I_O=0A, V_C=0V			
Overcurrent Protection Starting Current*1,3		I_{S1}	1.2			1.2			1.2			1.2			A
		Conditions	V_{IN}=3.3V			V_{IN}=3.3V			V_{IN}=5V			V_{IN}=6V			
V_C Terminal	Control Voltage (Output ON)*2	V_C, IH	2.0			2.0			2.0			2.0			V
	Control Voltage (Output OFF)*2	V_C, IL			0.8			0.8			0.8			0.8	
	Control Current (Output ON)	I_C, IH		40	80		40	80		40	80		40	80	μA
		Conditions	V_C=2V												
	Control Current (Output OFF)	I_C, IL		0	–5		0	–5		0	–5		0	–5	μA
		Conditions	V_C=0V												

*1: I_{S1} is specified at the 5% drop point of output voltage V_O on the condition that V_{IN} = 3.3 V (5 V for SI-3033LSA), and I_O = 0.5 A.
*2: Output is OFF when the output control terminal VC is open. Each input level is equivalent to LS-TTL level. Therefore, the device can be driven directly by LS-TTLs.
*3: These products cannot be used in the following applications. Because these applications require a certain current at start-up and so the built-in foldback-type overcurrent protection may cause errors during start-up stage.
(1) Constant current load (2) Positive and negative power supply (3) Series-connected power supply (4) V_O adjustment by raising ground voltage

Not Recommended for New Designs

■External Dimensions (SOP8)

(Unit : mm)

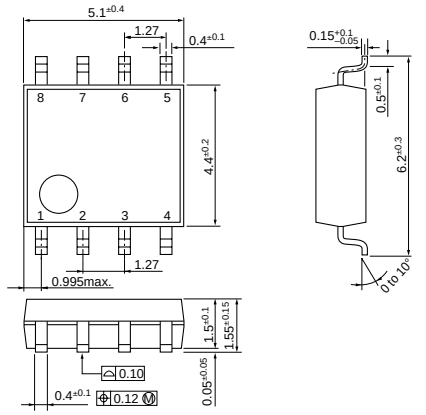

Pin Assignment
① V_{IN}
② NC (Leave open)
③ V_{IN}
④ V_C
⑤ GND
⑥ GND
⑦ V_O
⑧ V_O

Plastic Mold Package Type
Flammability: UL94V-0
Product Mass: Approx. 0.1g

■Block Diagram

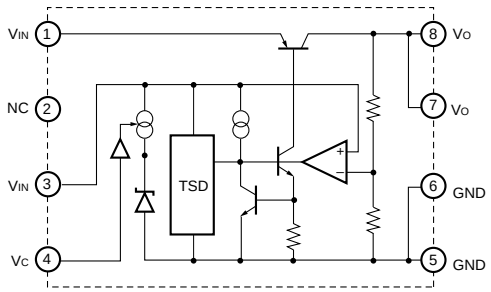

■Typical Connection Diagram

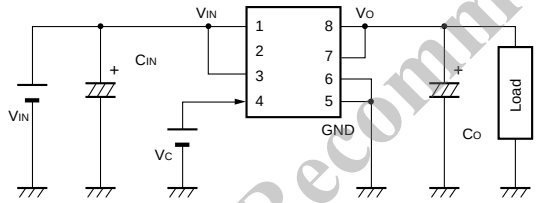

C_O: Output capacitor (22 μF or larger)
C_{IN}: Input capacitor (10 μF)
This capacitor is required in the case of an inductive input line or long wiring.
Tantalum capacitors are recommended for C_{IN} and C_O, particularly at low temperatures.
* Leave pin 2 open.

■Reference Data

PCB Copper Laminate Area vs. Junction to Ambient Air Thermal Resistance

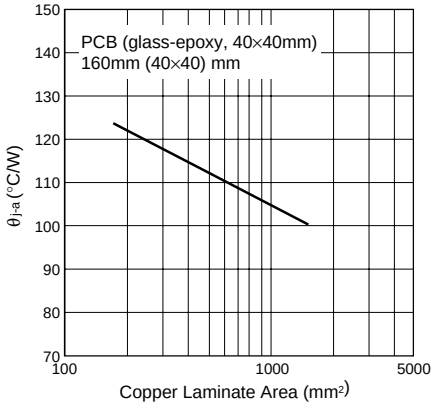

Allowable Output Current (vs. V_{IN}-V_{OUT} Voltage Difference) V_{IN}-Io max

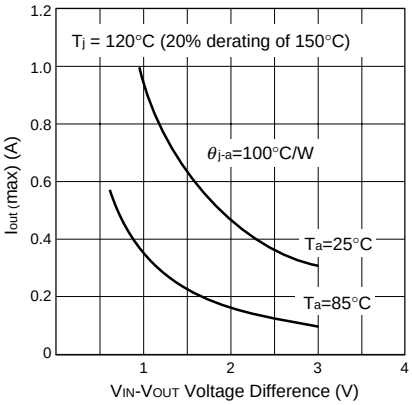

The inner frame stage, on which the PTr is mounted, is directly connected to the V_{OUT} pin.
Therefore, enlarging the copper laminate area around the V_{OUT} pin is really effective for a heat radiation.

Not Recommended for New Designs

ENTEGRECİ

Bu belge www.entegreci.com üzerinden sunulmaktadır.

Elektronik komponent tedarikinde Entegreci

Entegreci, Eskişehir merkezli, Türkiye geneline satış yapan bir elektronik komponent mağazasıdır. Entegreler (IC), mikrodenetleyiciler, transistörler, diyotlar, pasif elemanlar, konnektörler, modüller ve geliştirme kartları tek adetten seri üretim adetlerine kadar satılır. Ürün sayfalarında güncel stok durumunu, fiyatı ve datasheet bağlantısını bulabilirsiniz.

Parça koduyla arama

Üretici parça numarasını yazın; stok ve fiyatı hemen görün.

www.entegreci.com

Ürün kategorileri

Entegreden kapasitöre tüm elektronik komponent kategorileri.

Kategorilere göz atın

Üreticiler

Aradığınız üreticinin ürünlerini tek sayfada inceleyin.

Üreticileri görün

Toplu alım ve teklif

Listede olmayan ya da yüksek adetli parçalar için teklif isteyin.

Teklif isteyin

www.entegreci.com | **destek@entegreci.com** | **0850 305 90 34**

Entegreci is an online electronic components store based in Türkiye. Search by manufacturer part number to see stock, prices and datasheets for integrated circuits, microcontrollers, transistors, passive components and connectors, or request a quote for parts that are not listed.

Bu sayfa Entegreci tarafından eklenmiştir. Belgenin önceki sayfaları asıl yayıncısına aittir ve içeriği değiştirilmemiştir; en güncel sürüm için belgenin yayıncısına başvurun.