SI-3000KD Series Surface-Mount, Low Current Consumption, Low Dropout Voltage

■Features

- Compact surface-mount package (TO263-5)
- Output current: 1.0A
- Low dropout voltage: $V_{DIF} \leq 0.6V$ (at $I_O = 1.0A$)
- Low circuit current consumption: $I_q \leq 350\ \mu A$ (600 μA for SI-3010KD, SI-3050KD)
- Low circuit current at output OFF: I_q (OFF) $\leq 1\ \mu A$
- Built-in overcurrent, thermal protection circuits
- Compatible with low ESR capacitors (SI-3012KD and SI-3033KD)

■Absolute Maximum Ratings

(T_a=25°C)

Parameter	Symbol	Ratings		Unit
		SI-3012KD/3033KD	SI-3010KD/3050KD	
DC Input Voltage	V_{IN}	17	35*1	V
Output Control Terminal Voltage	V_C	V_{IN}		V
DC Output Current	I_O	1.0		A
Power Dissipation	P_D*2	3		W
Junction Temperature	T_j	–30 to +125		°C
Storage Temperature	T_{stg}	–30 to +125		°C
Thermal Resistance (Junction to Ambient Air)	$\theta_{j\text{-}a}$	33.3		°C/W
Thermal Resistance (Junction to Case)	$\theta_{j\text{-}c}$	3		°C/W

*1: A built-in input-overvoltage-protection circuit shuts down the output voltage at the Input Overvoltage Shutdown Voltage of the electrical characteristics.

*2: When mounted on glass-epoxy board of 1600mm^2 (copper laminate area 100%).

■Applications

- Secondary stabilized power supply (local power supply)

■Electrical Characteristics 1 (Low Input Voltage type compatible with low ESR output capacitor)

(T_a=25°C, V_C=2V, unless otherwise specified)

Parameter		Symbol	Ratings						Unit
			SI-3012KD (Variable type)			SI-3033KD			
			min.	typ.	max.	min.	typ.	max.	
Input Voltage		V_{IN}	2.4*3		*4	*3		*4	V
Output Voltage (Reference Voltage for SI-3012KD)		V_O (V_{ADJ})	1.24	1.28	1.32	3.234	3.300	3.366	V
		Conditions	V_{IN}=3.3V, I_O=10mA			V_{IN}=5V, I_O=10mA			
Line Regulation		ΔV_{OLINE}			15			15	mV
		Conditions	V_{IN}=3.3 to 8V, I_O=10mA (V_O=2.5V)			V_{IN}=5 to 10V, I_O=10mA			
Load Regulation		ΔV_{OLOAD}			40			50	mV
		Conditions	V_{IN}=3.3V, I_O=0 to 1A (V_O=2.5V)			V_{IN}=5V, I_O=0 to 1A			
Dropout Voltage		V_{DIF}			0.4			0.4	V
		Conditions	I_O=0.5A (V_O=2.5V)			I_O=0.5A			
					0.6			0.6	
		Conditions	I_O=1A (V_O=2.5V)			I_O=1A			
Quiescent Circuit Current		I_q			350			350	μA
		Conditions	V_{IN}=3.3V, I_O=0A, V_C=2V, R2=2.4kΩ			V_{IN}=5V, I_O=0A, V_C=2V			
Circuit Current at Output OFF		I_q (OFF)			1			1	μA
		Conditions	V_{IN}=3.3V, V_C=0V			V_{IN}=5V, V_C=0V			
Temperature Coefficient of Output Voltage		$\Delta V_O/\Delta T_a$		±0.3			±0.3		mV/°C
		Conditions	T_j=0 to 100°C (V_O=2.5V)			T_j=0 to 100°C			
Ripple Rejection		R_{REJ}		55			55		dB
		Conditions	V_{IN}=3.3V, f=100 to 120Hz, I_O=0.1A (V_O=2.5V)			V_{IN}=5V, f=100 to 120Hz, I_O=0.1A			
Overcurrent Protection Starting Current*1		I_{S1}	1.1			1.1			A
		Conditions	V_{IN}=3.3V			V_{IN}=5V			
V_C Terminal	Control Voltage (Output ON)*2	V_C, IH	2			2			V
	Control Voltage (Output OFF)	V_C, IL			0.8			0.8	
	Control Current (Output ON)	I_C, IH			40			40	μA
		Conditions	V_C=2V			V_C=2V			
	Control Current (Output OFF)	I_C, IL	–5	0		–5	0		μA
		Conditions	V_C=0V			V_C=0V			

*1: I_{S1} is specified at the 5% drop point of output voltage V_O under the condition of Output Voltage parameter.

*2: Output is OFF when the output control terminal (V_C terminal) is open. Each input level is equivalent to LS-TTL level. Therefore, the device can be driven directly by LS-TTLs.

*3: Refer to the Dropout Voltage parameter.

*4: V_{IN} (max) and I_O (max) are restricted by the relation $P_D = (V_{IN} - V_O) \times I_O$. Please calculate these values referring to the Copper laminate area vs. Power dissipation data.

Not Recommended for New Designs. SI-3012KD, SI-3050KD

■Electrical Characteristics 2 (High Input Voltage Type)

Parameter		Symbol	Ratings						Unit
			SI-3010KD (Variable type)			SI-3050KD			
			min.	typ.	max.	min.	typ.	max.	
Input Voltage		V_{IN}	2.4[*1]		27[*5]	[*1]		15[*5]	V
Output Voltage (Reference Voltage V_{ADJ} for SI-3010KD)		V_O (V_{ADJ})	0.98	1.00	1.02	4.90	5.00	5.10	V
		Conditions	V_{IN}=7V, I_O=10mA			V_{IN}=7V, I_O=10mA			
Line Regulation		ΔV_{OLINE}			30			30	mV
		Conditions	V_{IN}=6 to 11V, I_O=10mA (V_O=5V)			V_{IN}=6 to 11V, I_O=10mA			
Load Regulation		ΔV_{OLOAD}			75			75	mV
		Conditions	V_{IN}=7V, I_O=0 to 1A (V_O=5V)			V_{IN}=7V, I_O=0 to 1A			
Dropout Voltage		V_{DIF}			0.3			0.3	V
		Conditions	I_O=0.5A (V_O=5V)			I_O=0.5A			
					0.6			0.6	
		Conditions	I_O=1A (V_O=5V)			I_O=1A			
Quiescent Circuit Current		I_q			600			600	μA
		Conditions	V_{IN}=7V, I_O=0A, V_C=2V R2=10kΩ			V_{IN}=7V, I_O=0A, V_C=2V			
Circuit Current at Output OFF		I_q (OFF)			1			1	μA
		Conditions	V_{IN}=7V, V_C=0V			V_{IN}=7V, V_C=0V			
Temperature Coefficient of Output Voltage		$\Delta V_O/\Delta T_a$		±0.5			±0.5		mV/°C
		Conditions	T_j=0 to 100°C (V_O=5V)			T_j=0 to 100°C			
Ripple Rejection		R_{REJ}		75			75		dB
		Conditions	V_{IN}=7V, f=100 to 120Hz, I_O=0.1A (V_O=5V)			V_{IN}=7V, f=100 to 120Hz, I_O=0.1A			
Overcurrent Protection Starting Current[*2] [*4]		I_{S1}	1.1			1.1			A
		Conditions	V_{IN}=7V			V_{IN}=7V			
V_C Terminal	Control Voltage (Output ON)[*3]	V_C, IH	2.0			2.0			V
	Control Voltage (Output OFF)[*3]	V_C, IL			0.8			0.8	
	Control Current (Output ON)	I_C, IH			40			40	μA
		Conditions	V_C=2V			V_C=2V			
	Control Current (Output OFF)	I_C, IL	–5	0		–5	0		μA
		Conditions	V_C=0V			V_C=0V			
Input Overvoltage Shutdown Voltage		V_{OVP}	33			26			V
		Conditions	I_O=10mA			I_O=10mA			

*1: Refer to the Dropout Voltage parameter.
*2: I_{S1} is specified at the 5% drop point of output voltage V_O under the condition of Output Voltage parameter.
*3: Output is OFF when the output control terminal (V_C terminal) is open. Each input level is equivalent to LS-TTL level. Therefore, the device can be driven directly by LS-TTLs.
*4: SI-3010KD, SI-3050KD, cannot be used in the following applications because the built-in foldback-type overcurrent protection may cause errors during start-up stage.
(1) Constant current load (2) Positive and negative power supply (3) Series-connected power supply (4) V_O adjustment by raising ground voltage
*5: V_{IN} (max) and I_O (max) are restricted by the relation P_D = (V_{IN} - V_O) × I_O. Please calculate these values referring to the Copper laminate area vs. Power dissipation data as shown hereinafter.

Not Recommended for New Designs.
SI-3010KD, SI-3050KD

■External Dimensions (TO263-5)

(unit : mm)

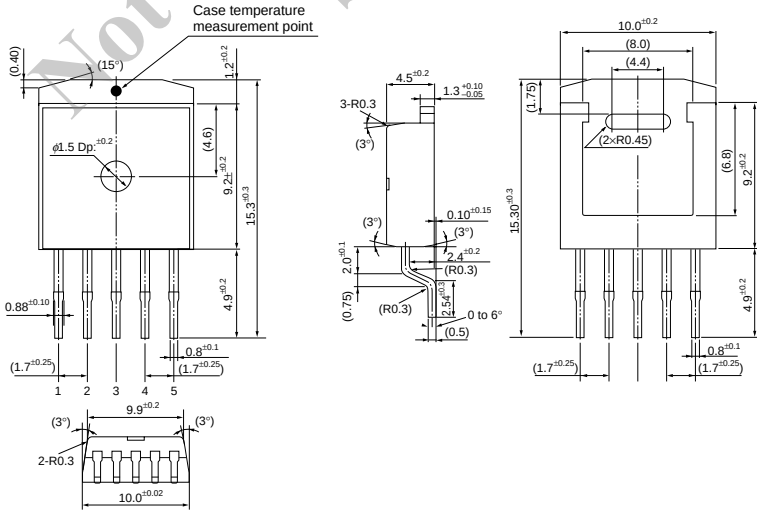

Pin Assignment
① V_C
② V_{IN}
③ GND (Common to the rear side of product)
④ V_O
⑤ Sense
(ADJ for SI-3010KD/3012KD)

Plastic Mold Package Type
Flammability: UL94V-0
Product Mass: Approx. 1.48g

■Block Diagram

●SI-3010KD/SI-3012KD

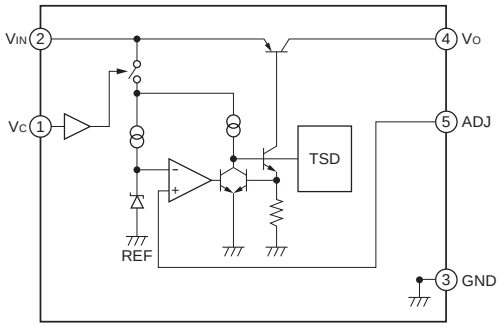

●SI-3033KD/SI-3050KD

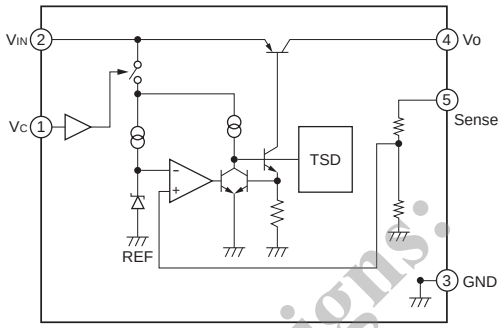

■Typical Connection Diagram

●SI-3033KD/SI-3050KD

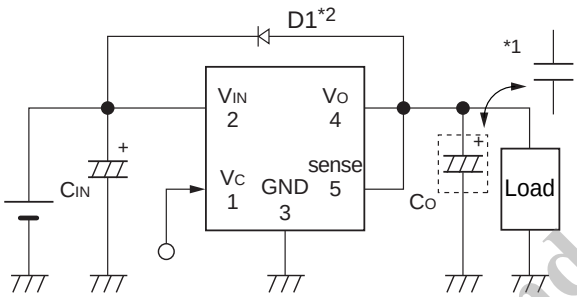

●SI-3010KD/SI-3012KD

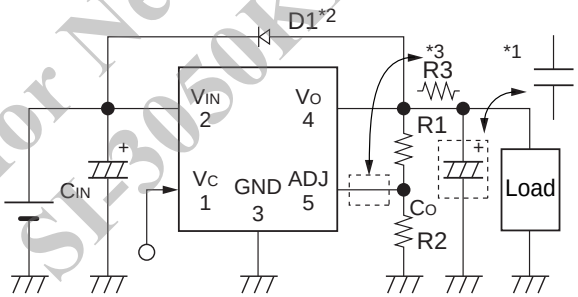

CIN: Input capacitor (22 μF or larger)
CO: Output capacitor

*1: SI-3012KD/3033KD (22 μF or larger)
Co has to be a low ESR capacitor such as a ceramic capacitor.
When using the electrolytic capacitor, oscillation may occur at a low temperature.
SI-3010KD/3050KD/ (47 μF or larger)
If a low ESR capacitor is used, oscillation may occur.

*2: D1: Reverse bias protection diode
This diode is required for protection against reverse biasing between the input and output.
(Sanken SJPL-H2 is recommended.)
This diode is not required at VO ≤ 3.3V.

R1, R2: Output voltage setting resistors
The output voltage can be set by connecting R1 and R2 as shown above.
The recommended value for R2 is 10Ω (24kΩ for SI-3012KD).

$R1=(V_O-V_{ADJ})\div(V_{ADJ}/R2)$

*3: For SI-3010KD, insert R3 in case of setting VO to VO ≤ 1.5V.
The recommended value for R3 is 10kΩ.

Not Recommended for New Designs.
SI-3012KD, SI-3050KD

■Reference Data

Copper Laminate Area (on Glass-Epoxy Board) vs.
Thermal Resistance (from Junction to Ambient Temperature) (Typical Value)

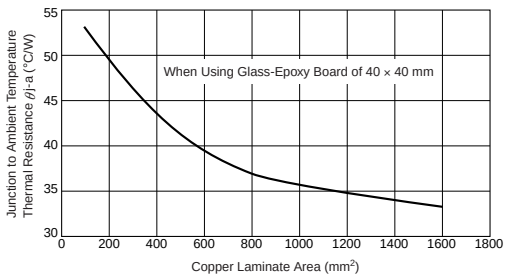

- A higher heat radiation effect can be achieved by enlarging the copper laminate area connected to the inner frame to which a monolithic ICs is mounted.
- Obtaining the junction temperature
  Measure the case temperature TC with a thermocouple, etc. Then, substitute this value in the following formula to obtain the junction temperature.

$T_j=P_D \times \theta_{j-C} + T_C \quad (\theta_{j-C} = 3°C/W) \quad P_D= (V_{IN}-V_O)\bullet I_{OUT}$

ENTEGRECİ

Bu belge www.entegreci.com üzerinden sunulmaktadır.

Elektronik komponent tedarikinde Entegreci

Entegreci, Eskişehir merkezli, Türkiye geneline satış yapan bir elektronik komponent mağazasıdır. Entegreler (IC), mikrodenetleyiciler, transistörler, diyotlar, pasif elemanlar, konnektörler, modüller ve geliştirme kartları tek adetten seri üretim adetlerine kadar satılır. Ürün sayfalarında güncel stok durumunu, fiyatı ve datasheet bağlantısını bulabilirsiniz.

Parça koduyla arama

Üretici parça numarasını yazın; stok ve fiyatı hemen görün.

www.entegreci.com

Ürün kategorileri

Entegreden kapasitöre tüm elektronik komponent kategorileri.

Kategorilere göz atın

Üreticiler

Aradığınız üreticinin ürünlerini tek sayfada inceleyin.

Üreticileri görün

Toplu alım ve teklif

Listede olmayan ya da yüksek adetli parçalar için teklif isteyin.

Teklif isteyin

www.entegreci.com | **destek@entegreci.com** | **0850 305 90 34**

Entegreci is an online electronic components store based in Türkiye. Search by manufacturer part number to see stock, prices and datasheets for integrated circuits, microcontrollers, transistors, passive components and connectors, or request a quote for parts that are not listed.

Bu sayfa Entegreci tarafından eklenmiştir. Belgenin önceki sayfaları asıl yayıncısına aittir ve içeriği değiştirilmemiştir; en güncel sürüm için belgenin yayıncısına başvurun.