I_{OUT} = 1 A Linear Regulator ICs

SI-3000KD Series

Data Sheet

Description

The SI-3000KD series are linear regulator ICs whose maximum output current is 1 A. The output voltage of the SI-3010KD is adjusted by external resistors. The output voltage of the SI-3033KD is 3.3 V fixed.

The ICs have a built-in low saturation PNP bipolar transistor and can operate with a low input/output voltage difference. The ICs have various functions including the Output On/Off Function, the Overcurrent Protection and the Thermal Shutdown, and achieve a linear regulator circuit with few external components.

Features

- Low Dropout Voltage, $\Delta V_{DIF} \leq 0.6$ V (I_{OUT} = 1 A)
- Output On/Off Function
- Protections
  Overcurrent Protection (OCP): Fold-back (SI-3010KD), Drooping (SI-3033KD), Auto-restart
  Thermal Shutdown (TSD): Auto-restart

Typical Application (SI-3010KD)

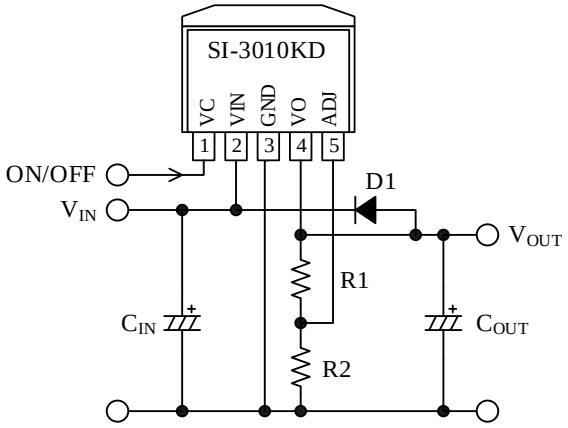

Packages

TO263-5L



Not to scale

Selection Guide

Part Number	Output Voltage
SI-3010KD	Adjustable
SI-3033KD	3.3 V

Applications

- Audio Visual Equipment
- Office Automation Equipment
- White Goods

© SANKEN ELECTRIC CO., LTD. 2013

Contents

Description ---- 1
Contents ---- 2
1. Absolute Maximum Ratings ---- 3
2. Thermal Resistance Characteristics ---- 3
3. Recommended Operating Range ---- 4
4. Electrical Characteristics ---- 5
4.1. SI-3010KD ---- 5
4.2. SI-3033KD ---- 6
5. Performance Curves ---- 7
5.1. SI-3010KD ---- 7
5.2. SI-3033KD ---- 10
6. Derating Curve ---- 12
7. Block Diagram ---- 13
8. Pin Configuration Definitions ---- 14
9. Typical Application ---- 15
9.1. SI-3010KD ---- 15
9.2. SI-3033KD ---- 16
10. Physical Dimensions ---- 17
10.1. Land Pattern Example ---- 17
11. Marking Diagram ---- 18
12. Operational Description ---- 19
12.1. Constant Voltage Control ---- 19
12.2. Output Voltage Setting (Only SI-3010KD) ---- 19
12.3. Overcurrent Protection Function (OCP) ---- 19
12.4. Thermal Shutdown (TSD) ---- 19
12.5. Output On/Off Function ---- 19
13. Design Notes ---- 20
13.1. Considerations in Circuit Configuration (Only SI-3010KD) ---- 20
13.2. External Components ---- 20
13.3. PCB Pattern Layout ---- 20
13.4. Thermal Design ---- 21
Important Notes ---- 22

© SANKEN ELECTRIC CO., LTD. 2013

1. Absolute Maximum Ratings

Unless otherwise specified, T_A = 25 °C.

Parameter	Symbol	Conditions	Rating	Unit	Remarks
VIN Pin Voltage	V_{IN}		35[1]	V	SI-3010KD
			17	V	SI-3033KD
VC Pin Voltage	V_C		V_{IN}	V	
Output Current	I_{OUT}		1	A	
Power Dissipation	P_D	Mounted on the board [2]	3	W	
Junction Temperature	T_J		−30 to 125	°C	
Operating Ambient Temperature [2]	T_{OP}		−30 to 85	°C	
Storage Temperature	T_{STG}		−30 to 125	°C	

2. Thermal Resistance Characteristics

Parameter	Symbol	Conditions	Min.	Typ.	Max.	Unit
Thermal Resistance between Junction and Ambient	θ_{J-A}	Mounted on the board [2]	—	—	33.3	°C/W
Thermal Resistance between Junction and Case[3]	θ_{J-C}		—	—	3	°C/W

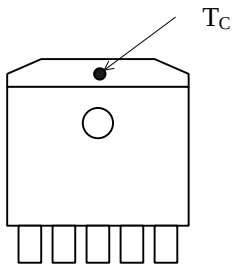

Figure 2-1. Case Temperature Measurement Point

[1] Limited by overvoltage protection voltage of 33 V.
[2] Glass-epoxy board (40 mm × 40 mm), copper area 100%
[3] The case temperature (°C) is measured at the point defined in Figure 2-1.

© SANKEN ELECTRIC CO., LTD. 2013

3. Recommended Operating Range

Parameter	Symbol	Min.	Max.	Unit	Remarks
VIN Pin Voltage	V_{IN}	2.4[1]	27[2]	V	SI-3010KD
		[1]	6[2]	V	SI-3033KD
Output Current	I_{OUT}	0	1[2]	A	
Output Voltage	V_{OUT}	1.1	16	V	SI-3010KD
Operating Ambient Temperature	$T_{OP(A)}$	−30	85	°C	
Operating Junction Temperature	$T_{OP(J)}$	−20	100	°C	

[1] Should be set to V_{OUT} + dropout voltage or higher. See Section 4 for dropout voltage.

[2] The following equation shows the relationship between V_{IN}, V_{OUT}, and I_{OUT}. Thus, Dropout Voltage ($V_{IN} - V_{OUT}$) and/or I_{OUT} may be limited in some conditions.

$$P_D = (V_{IN} - V_{OUT}) \times I_{OUT}$$

© SANKEN ELECTRIC CO., LTD. 2013

4. Electrical Characteristics

4.1. SI-3010KD

Current polarities are defined as follows: current going into the IC (sinking) is positive current (+); current coming out of the IC (sourcing) is negative current (−).

Unless otherwise specified, T_A = 25 °C, V_{OUT} = 5 V, R2 = 10 kΩ.

Parameter	Symbol	Conditions	Min	Typ.	Max	Unit
Reference Voltage	V_{REF}	V_{IN} = 7 V, I_{OUT} = 10 mA	0.98	1.00	1.02	V
Line Regulation	ΔV_{LINE}	V_{IN} = 6 V to 15 V, I_{OUT} = 10 mA	—	—	30	mV
Load Regulation	ΔV_{LOAD}	V_{IN} = 7 V, I_{OUT} = 0 A to 1 A	—	—	75	mV
Dropout Voltage	ΔV_{DIF}	I_{OUT} = 0.5 A	—	—	0.3	V
		I_{OUT} = 1 A	—	—	0.6	V
Output Voltage Temperature Coefficient	$\Delta V_{OUT}/\Delta T_A$	T_J = 0 °C to 100 °C	—	±0.5	—	mV/°C
Ripple Rejection Ratio	R_{REJ}	V_{IN} = 7 V, f = 100 Hz to 120 Hz I_{OUT} = 0.1 A	—	55	—	dB
Overcurrent Protection Operating Current (1)	I_{S1}	V_{IN} = 7 V	1.1	—	—	A
Quiescent Current	I_Q	V_{IN} = 7 V, I_{OUT} = 0 A, V_C = 2 V	—	—	600	µA
Circuit Current during Regulator Output Off	$I_{Q(OFF)}$	V_{IN} = 7 V, V_C = 0 V	—	—	1	µA
VC Pin Voltage (Output On)	V_{C_IH}		2	—	—	V
VC Pin Voltage (Output Off)	V_{C_IL}		—	—	0.8	V
VC Pin Current (Output On)	I_{C_IH}	V_C = 2.0 V	—	—	40	µA
VC Pin Current (Output Off)	I_{C_IL}	V_C = 0 V	−5	0	—	µA
Overvoltage Protection Voltage	V_{OVP}	I_{OUT} = 10 mA	33	—	—	V

(1) After the Overcurrent Protection is activated, I_{S1} is measured when the output voltage, V_{OUT}, (conditions: V_{IN} = 7 V, I_{OUT} = 10 mA) decreases by 5%.

© SANKEN ELECTRIC CO., LTD. 2013

4.2. SI-3033KD

Current polarities are defined as follows: current going into the IC (sinking) is positive current (+); current coming out of the IC (sourcing) is negative current (−).

Unless otherwise specified, T_A = 25 °C.

Parameter	Symbol	Conditions	Min	Typ.	Max	Unit
Setting Output Voltage	V_{OUT}	V_{IN} = 5 V, I_{OUT} = 10 mA	3.234	3.300	3.366	V
Line Regulation	ΔV_{LINE}	V_{IN} = 5 V to 10 V, I_{OUT} = 10 mA	—	—	15	mV
Load Regulation	ΔV_{LOAD}	V_{IN} = 5 V, I_{OUT} = 0 A to 1 A	—	—	50	mV
Dropout Voltage	ΔV_{DIF}	I_{OUT} = 0.5 A	—	—	0.4	V
		I_{OUT} = 1 A	—	—	0.6	V
Output Voltage Temperature Coefficient	$\Delta V_{OUT}/\Delta T_A$	T_J = 0 °C to 100 °C	—	±0.3	—	mV/°C
Ripple Rejection Ratio	R_{REJ}	V_{IN} = 5 V, f = 100 Hz to 120 Hz	—	55	—	dB
Overcurrent Protection Operating Current [(1)]	I_{S1}	V_{IN} = 5 V	1.1	—	—	A
Quiescent Current	I_Q	V_{IN} = 5 V, I_{OUT} = 0 A, V_C = 2 V	—	—	350	µA
Circuit Current during Regulator Output Off	$I_{Q(OFF)}$	V_{IN} = 5 V, V_C = 0 V	—	—	1	µA
VC Pin Voltage (Output On)	V_{C_IH}		2	—	—	V
VC Pin Voltage (Output Off)	V_{C_IL}		—	—	0.8	V
VC Pin Current (Output On)	I_{C_IH}	V_C = 2.0 V	—	—	40	µA
VC Pin Current (Output Off)	I_{C_IL}	V_C = 0 V	−5	0	—	µA

[(1)] After the Overcurrent Protection is activated, I_{S1} is measured when the output voltage, V_{OUT}, (conditions: V_{IN} = 5 V, I_{OUT} = 10 mA) decreases by 5%.

© SANKEN ELECTRIC CO., LTD. 2013

5. Performance Curves

5.1. SI-3010KD

Unless otherwise specified, T_A = 25 °C, V_{OUT} = 5 V, R2 = 10 kΩ.

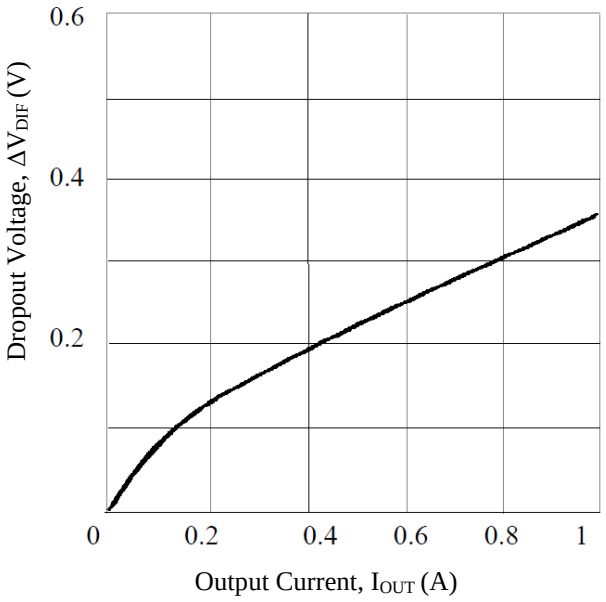

Figure 5-1. Dropout Voltage

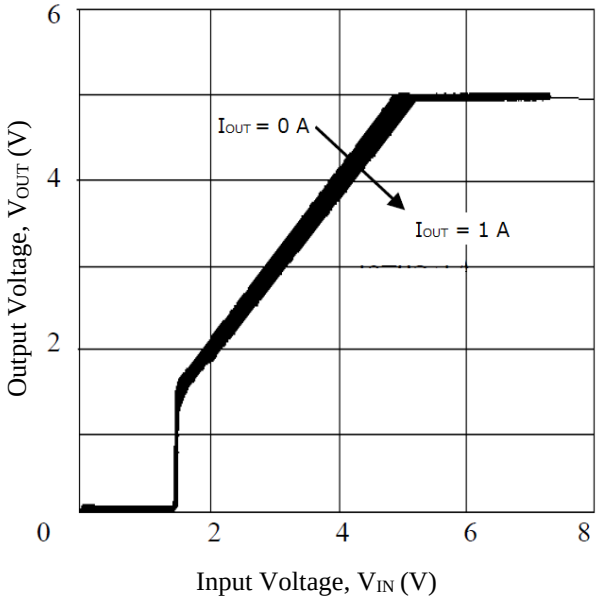

Figure 5-2. Output Rise Characteristics

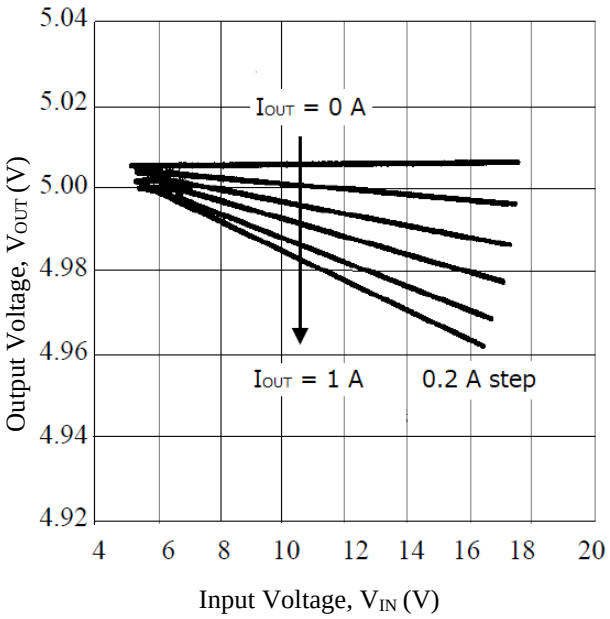

Figure 5-3. Line Regulation

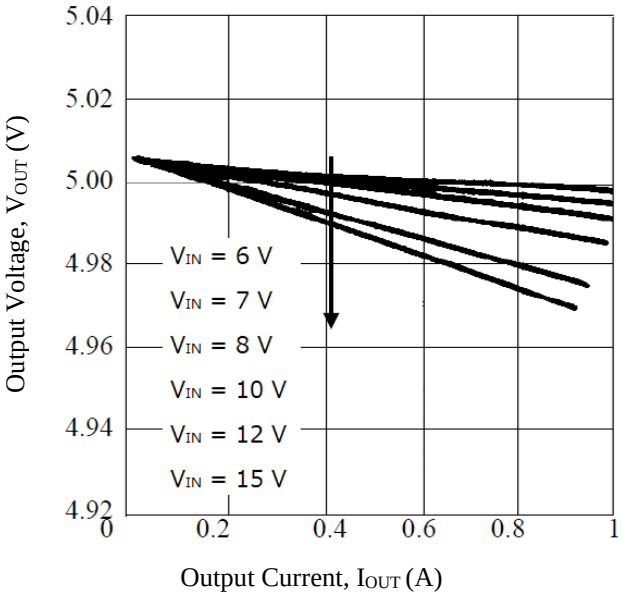

Figure 5-4. Load Regulation

© SANKEN ELECTRIC CO., LTD. 2013

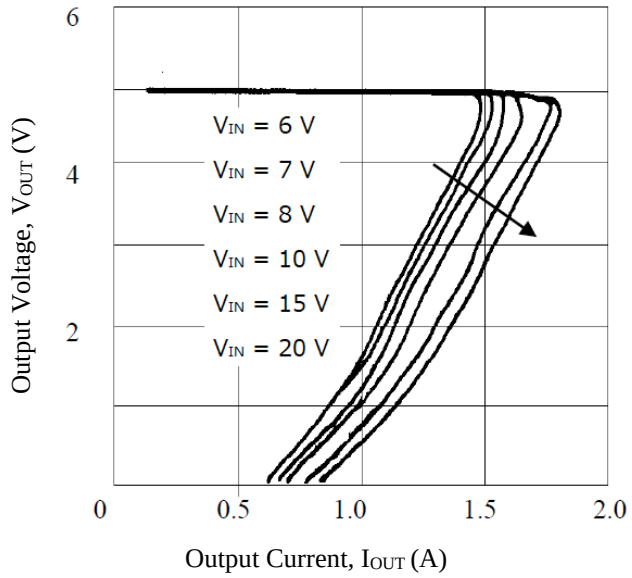

Figure 5-5. Overcurrent Protection Characteristics

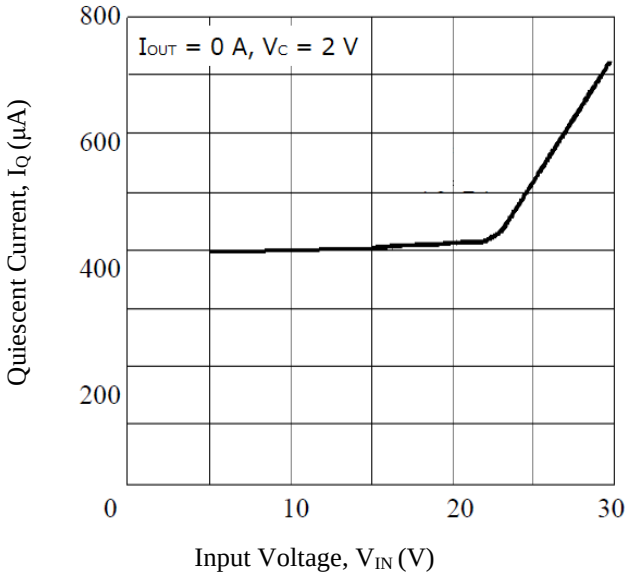

Figure 5-6. I_Q – V_{IN}

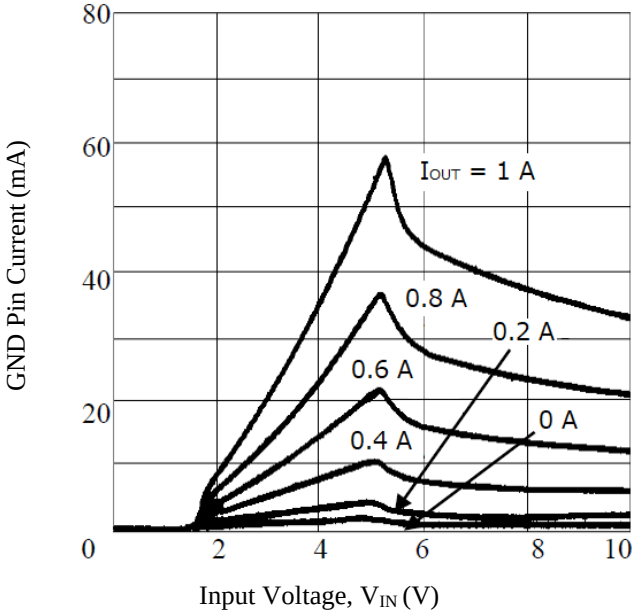

Figure 5-7. GND Pin Current

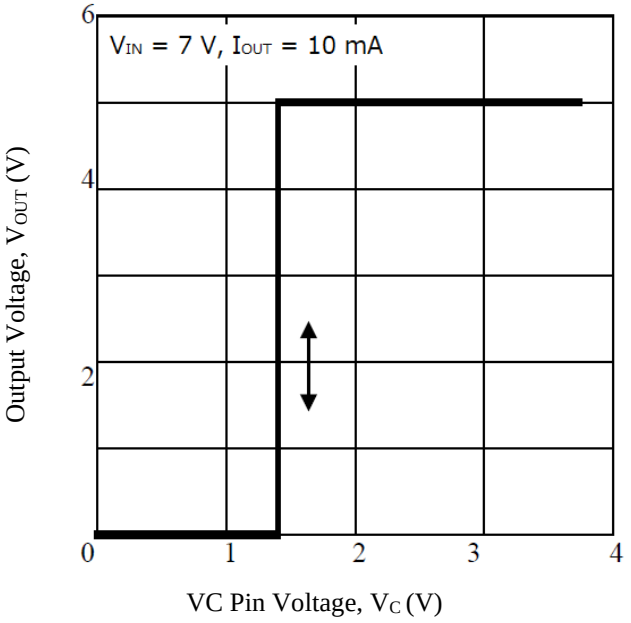

Figure 5-8. V_{OUT} – V_C

© SANKEN ELECTRIC CO., LTD. 2013

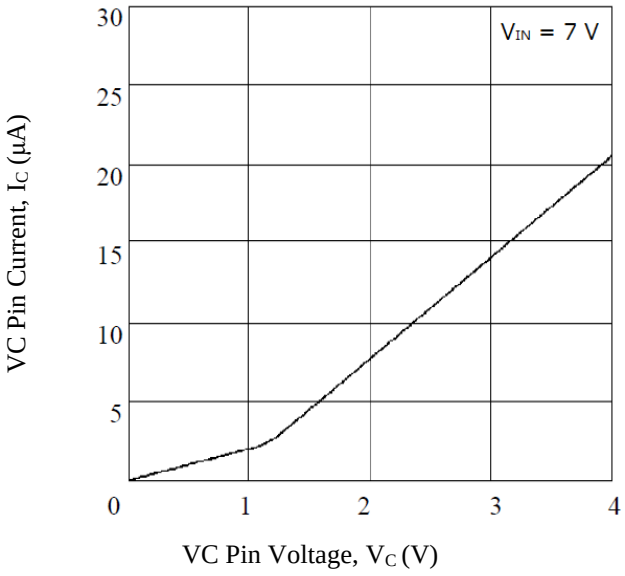

Figure 5-9. $I_C - V_C$

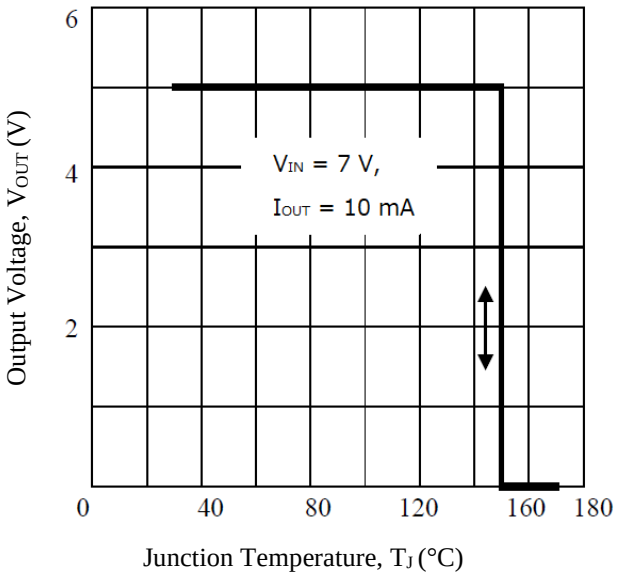

Figure 5-10. Thermal Shutdown Characteristics

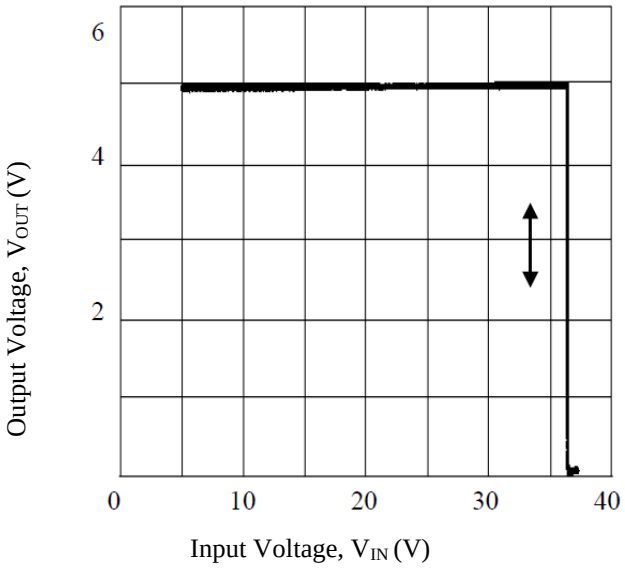

Figure 5-11 Overvoltage Protection Characteristics

© SANKEN ELECTRIC CO., LTD. 2013

5.2. SI-3033KD

Unless otherwise specified, T_A = 25 °C.

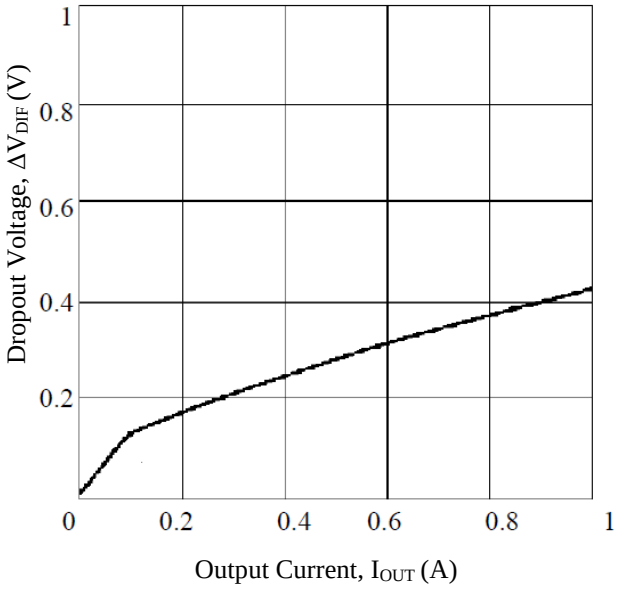

Figure 5-12. Dropout Voltage

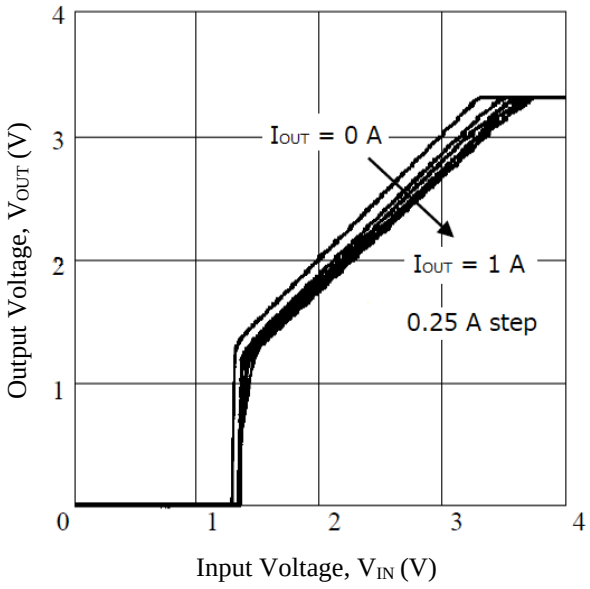

Figure 5-13. Output Rise Characteristics

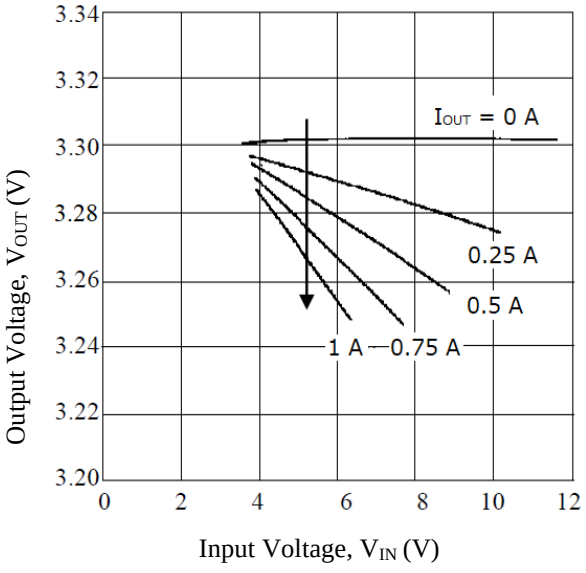

Figure 5-14. Line Regulation

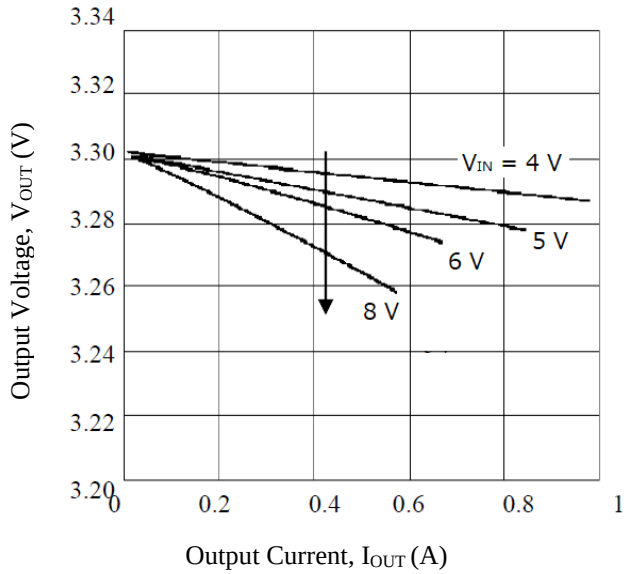

Figure 5-15. Load Regulation

© SANKEN ELECTRIC CO., LTD. 2013

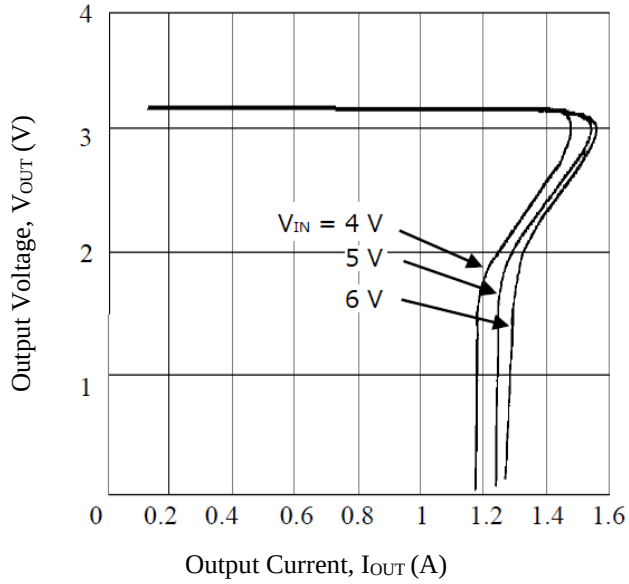

Figure 5-16. Overcurrent Protection Characteristics

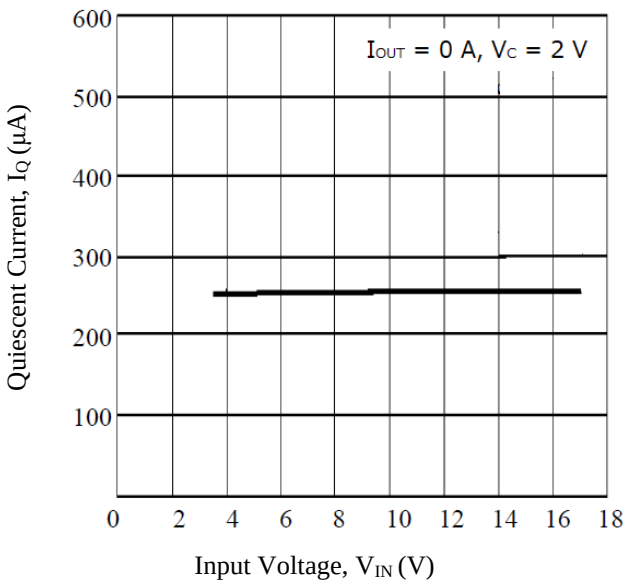

Figure 5-17. I_Q – V_{IN}

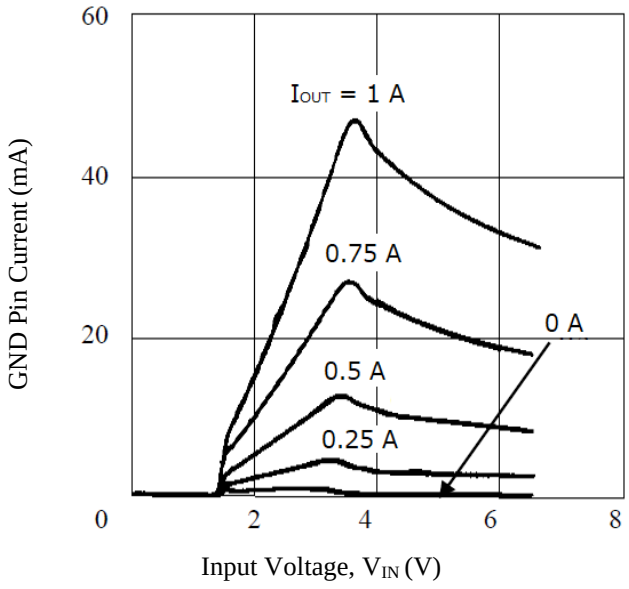

Figure 5-18. GND Pin Current

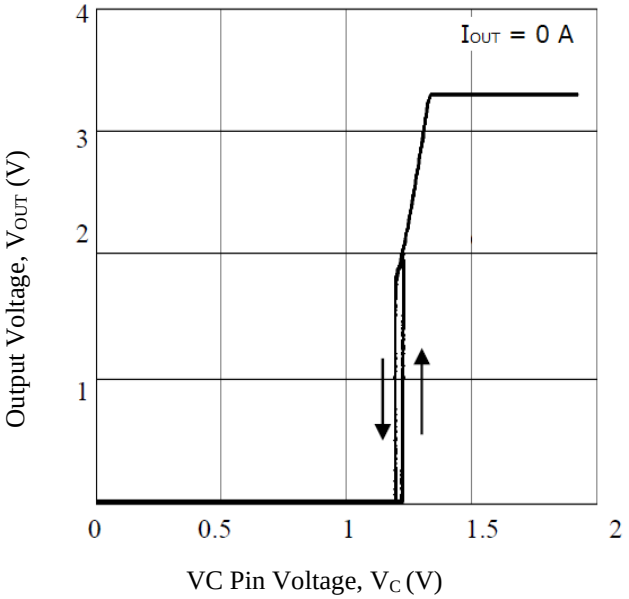

Figure 5-19. V_{OUT} – V_C

© SANKEN ELECTRIC CO., LTD. 2013

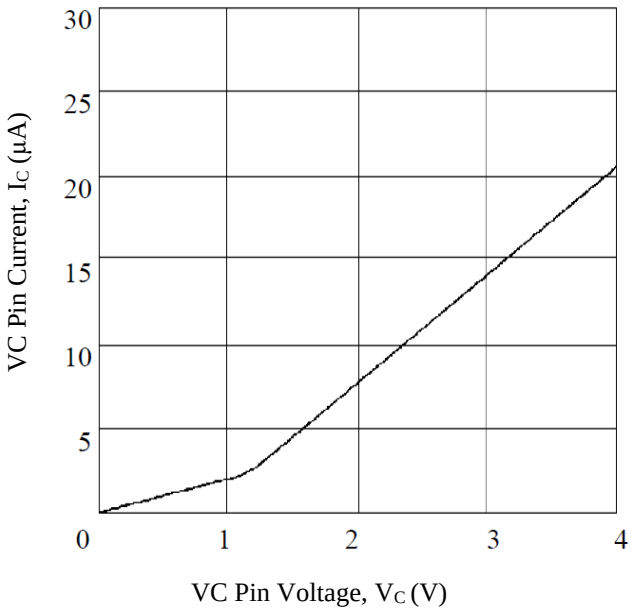

Figure 5-20. I_C – V_C

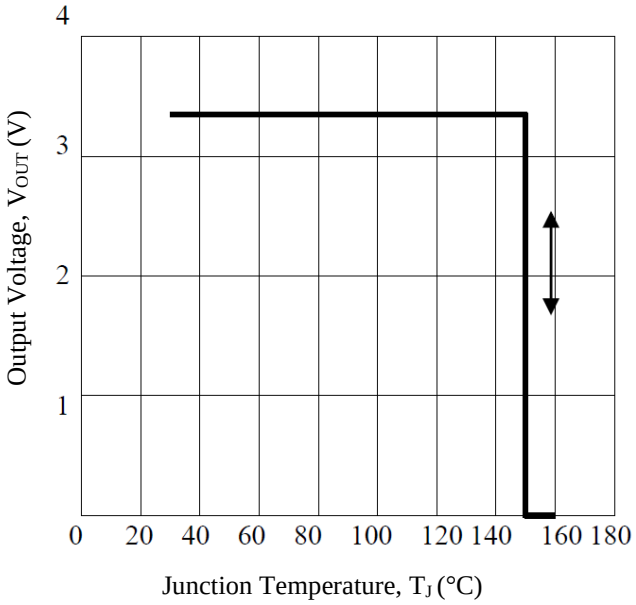

Figure 5-21. Thermal Shutdown Characteristics

6. Derating Curve

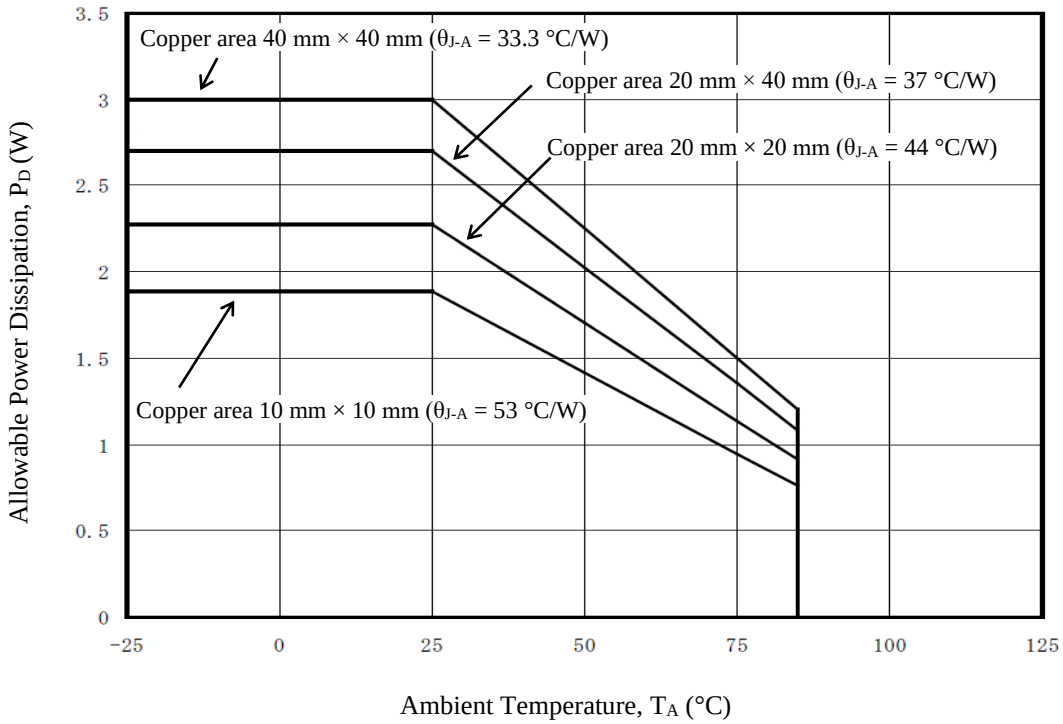

Figure 6-1. Power Dissipation, P_D vs. Ambient Temperature, T_A

© SANKEN ELECTRIC CO., LTD. 2013

7. Block Diagram

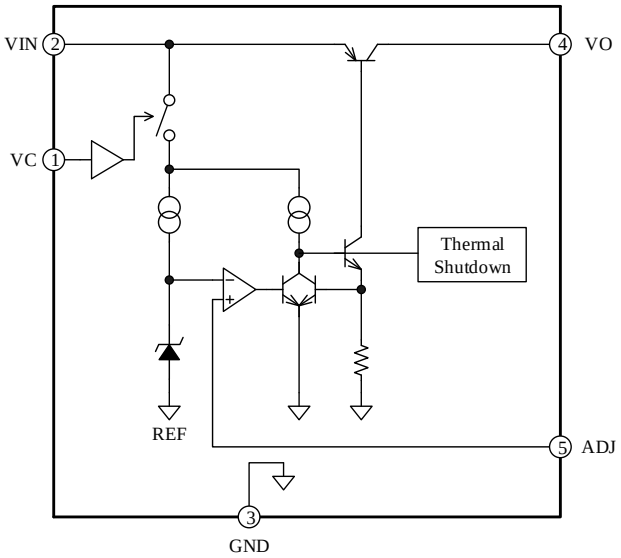

Figure 7-1. SI-3010KD: Block Diagram

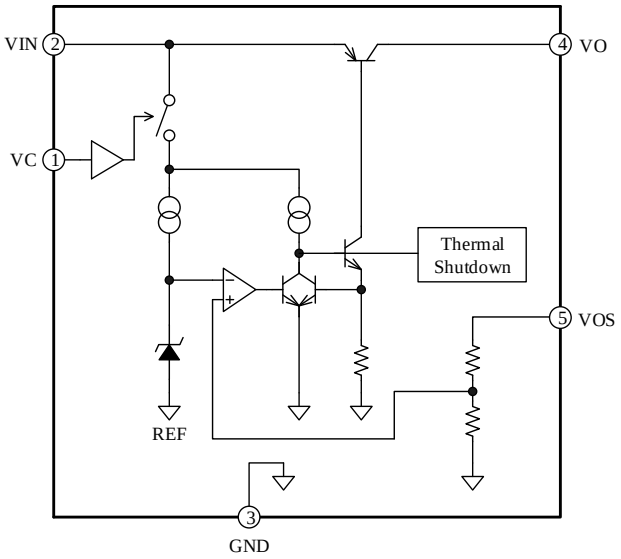

Figure 7-2. SI-3033KD: Block Diagram

© SANKEN ELECTRIC CO., LTD. 2013

8. Pin Configuration Definitions

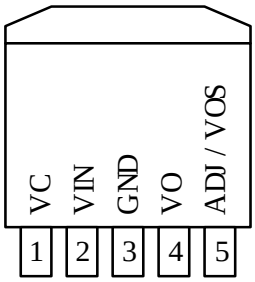

Pin Number	Pin Name	Function	Remarks
1	VC	On/off signal input	
2	VIN	Voltage input	
3	GND	Ground	
4	VO	Voltage output	
5	ADJ	Output voltage setting resistor connection	SI-3010KD
	VOS	Feedback	SI-3033KD
(Back Side)	—	Heatsink (A heatsink is internally connected to the GND pin. In order to improve heat dissipation, be sure to solder the heatsink of the IC to copper trace on PCB. The copper area should be as wide as possible.)	

© SANKEN ELECTRIC CO., LTD. 2013

9. Typical Application

9.1. SI-3010KD

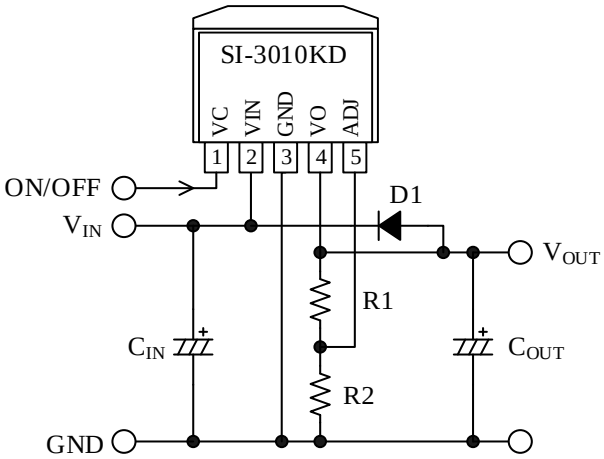

Figure 9-1. Typical Application (V_{OUT} > 1.5 V)

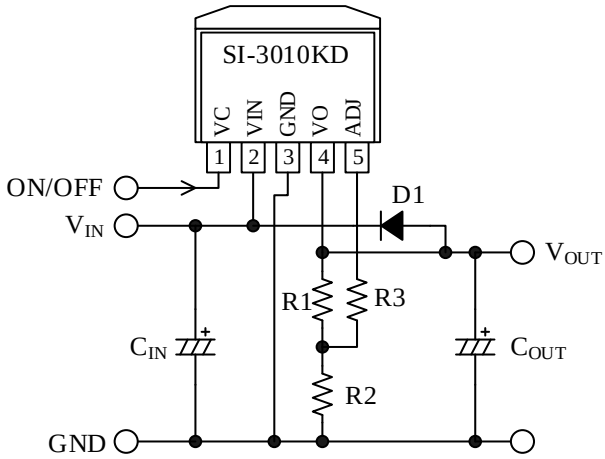

Figure 9-2. Typical Application ($V_{OUT} \leq$ 1.5 V)

Table 9-1 Reference Value of External Components

Symbol	Part Type	Reference Value	Remarks
C_{IN}	Electrolytic capacitor/ ceramic capacitor	0.47 µF to 22 µF	C_{IN} is required when the input line contains inductance, or the wiring is long. C_{IN} should be connected as close as possible to the VIN and GND pins with a minimal length of traces.
C_{OUT}	Electrolytic capacitor	≥ 47 µF	Ceramic capacitors cannot be used.
R1	Resistor	—	Adjust resistance according to the output voltage. See Section 12.2.
R2	Resistor	10 kΩ	See Section 12.2.
R3	Resistor	10 kΩ	Add R3 when $V_{OUT} \leq$ 1.5 V.
D1	Diode	—	Add D1 when V_{OUT} > 3.3 V. Select a diode that has sufficient Surge Forward Current tolerance against the discharge current of C_{OUT}. See Section 13.2.

© SANKEN ELECTRIC CO., LTD. 2013

9.2. SI-3033KD

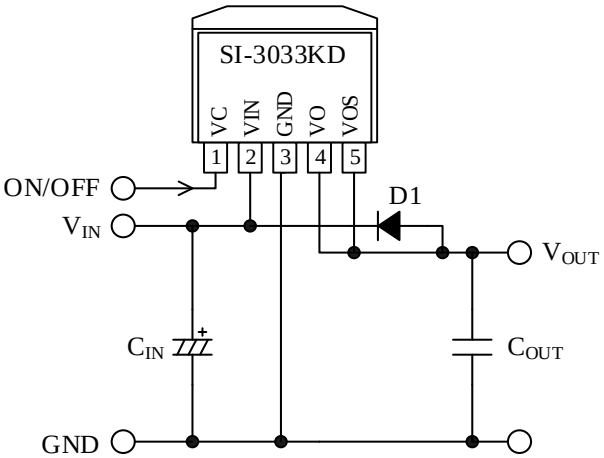

Figure 9-3. Typical Application

Table 9-2 Reference Value of External Components

Symbol	Part Type	Reference Value	Remarks
C_{IN}	Electrolytic capacitor/ ceramic capacitor	0.47 µF to 22 µF	C_{IN} is required when the input line contains inductance, or the wiring is long. C_{IN} should be connected as close as possible to the VIN and GND pins with a minimal length of traces.
C_{OUT}	Ceramic capacitor	≥ 22 µF	Electrolytic capacitors cannot be used.
D1	Diode	—	Select a diode that has sufficient Surge Forward Current tolerance against the discharge current of C_{OUT}. See Section 13.2.

© SANKEN ELECTRIC CO., LTD. 2013

10. Physical Dimensions

● **TO263-5L**

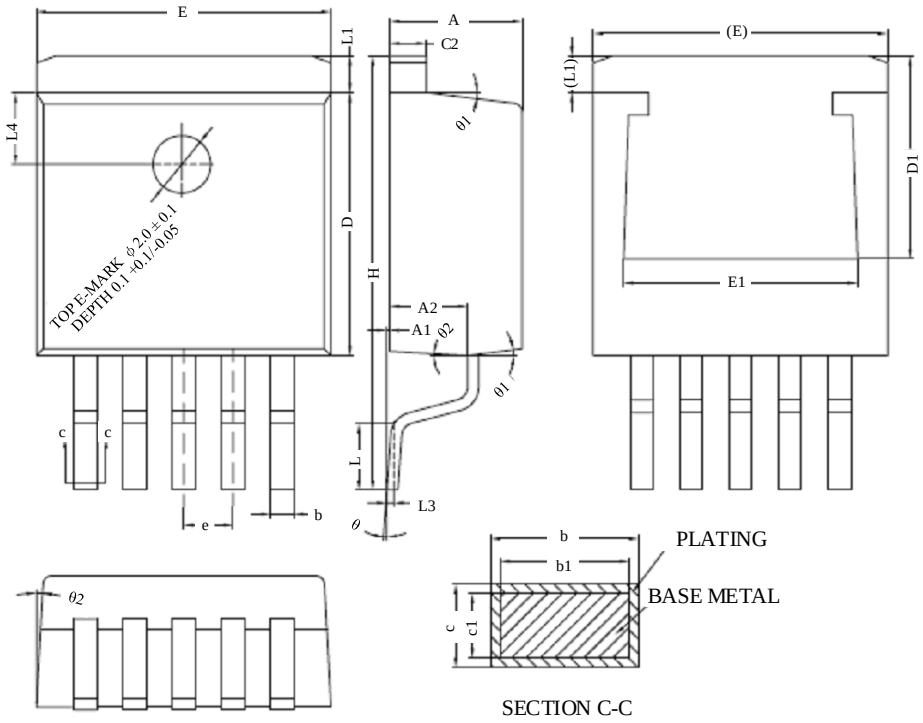

Symbol	Min.	Nom.	Max.
A	4.40	4.57	4.70
A1	0	0.10	0.25
A2	2.59	2.69	2.79
b	0.77	—	0.90
b1	0.76	0.81	0.86
c	0.34	—	0.47
c1	0.33	0.38	0.43
C2	1.22	—	1.32
D	9.05	9.15	9.25
D1	6.86	—	7.50
E	10.06	10.16	10.26
E1	7.50	—	8.30
e		1.70 BSC	
H	14.70	15.10	15.50
L	2.00	2.30	2.60
L1	1.17	1.27	1.40
L3	0.25 BSC		
L4	2.00 REF		
θ	0°	—	8°
θ1	5°	7°	9°
θ2	1°	3°	5°

NOTES:
- Dimensions in millimeters
- Bare lead frame: Pb-free (RoHS compliant)
- Dimensions do not include mold burrs.

10.1. Land Pattern Example

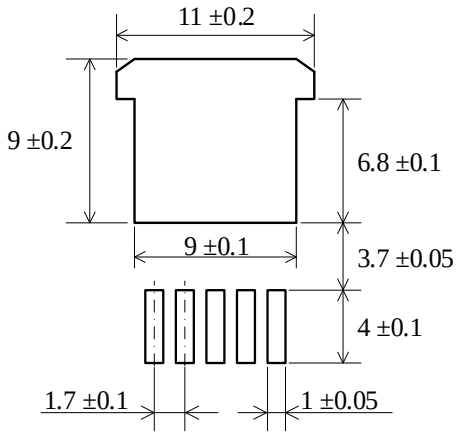

Dimensions in millimeters.

© SANKEN ELECTRIC CO., LTD. 2013

11. Marking Diagram

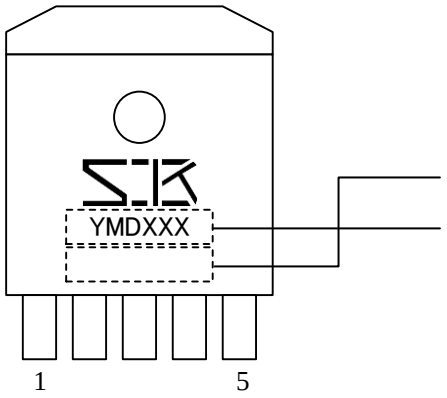

Specific Device Code (See Table 11-1.)

Lot Number:
Y is the last digit of the year of manufacture (0 to 9)
M is the month of the year (1 to 9, O, N, or D)
D is the period of days represented by:
1: the first 10 days of the month (1st to 10th)
2: the second 10 days of the month (11th to 20th)
3: the last 10–11 days of the month (21st to 31st)
XXX is the control number

Table 11-1 Specific Device Code

Specific Device Code	Part Number
3010KD	SI-3010KD
3033KD	SI-3033KD

© SANKEN ELECTRIC CO., LTD. 2013

12. Operational Description

All the characteristic values given in this section are typical values, unless they are specified as minimum or maximum. See Figure 9-1, Figure 9-2 and Figure 9-3 for symbols used in the description.

12.1. Constant Voltage Control

The IC consists of some circuit such as a reference voltage, an error amplifier, and a PNP transistor.

The SI-3010KD compares the ADJ pin voltage with the reference voltage by the error amplifier (see Figure 7-1). The SI-3033KD compares the output voltage, V_{OUT} divided by the detection resistors and the reference voltage by the error amplifier (see Figure 7-2). To regulate the output voltage, the emitter-to-collector voltage of the PNP transistor is linear controlled so that the compared voltages are the same.

The thermal design must be taken into account, because the product of the emitter-collector voltage (Dropout Voltage) and the output current result in the loss of the IC.

12.2. Output Voltage Setting (Only SI-3010KD)

The output voltage is adjusted by external resistors, R1 and R2 (see Figure 9-1 and Figure 9-2). The ADJ pin is for feedback signal input to set the output voltage. Do not apply any voltage other than this feedback signal to the ADJ pin.

The feedback current flowing through R1 and R2 is set to about 100 μA. The reference voltage of the ADJ pin, V_{REF}, is 1.00 V. R2 is calculated by Equation (1).

$$R2 = \frac{V_{REF}}{100\ (\mu A)} = \frac{1.10\ (V)}{100\ (\mu A)} = 11\ (k\Omega) \quad (1)$$

The output voltage, V_{OUT}, is calculated by Equation (2).

$$V_{OUT} = \frac{R1 + R2}{R2} \times V_{REF} \quad (2)$$

Thus, R1 is calculated by using Equation (3).

$$R1 = \frac{R2 \times (V_{OUT} - V_{REF})}{V_{REF}}$$

$$= \frac{10\ k\Omega \times (V_{OUT} - 1.10\ V)}{1.10\ V} \quad (3)$$

If the calculation result does not match the value defined by the E series, adjustment resistors should be added in series or parallel to R1.

When setting the output voltage to ≤ 1.5 V, add R3 as shown in Figure 9-2. R3 is about 10 kΩ.

12.3. Overcurrent Protection Function (OCP)

- **SI-3010KD**

The IC has Overcurrent Protection (OCP) with the fold-back characteristic that the output current at the short circuit load (V_{OUT} = 0 V) is smaller than that at OCP activation (see Figure 5-5). In the short circuit load, the loss (V_{IN} × I_{OUT}) of a fold-back system is less than the loss of the constant current or fold-forward system.

When the voltage across the output capacitor is 0 V at IC startup, the IC gradually increases the output voltage while limiting the output current with OCP.

- **SI-3033KD**

The IC has the Overcurrent Protection (OCP) with the drooping characteristic as shown in Figure 5-16. Note that the drooping type keeps a large output current flowing even after the OCP operates and the output voltage is short-circuited.

12.4. Thermal Shutdown (TSD)

The IC has the Thermal Shutdown (TSD). When the junction temperature of the IC increases to 130 °C or more, TSD is activated, and turns off the internal PNP transistor to shutdown the load current.

The TSD does not have temperature hysteresis. When the junction temperature falls below 130 °C, the IC automatically returns to normal operation.

The TSD protects the IC against the heat generation when the loss of the IC increases due to the instantaneous short-circuit of the load. This does not guarantee the operation including the reliability in the short-circuit state for long period or the state where the heat generation continues.

12.5. Output On/Off Function

The output is turned on/off by the input signal to the VC pin. When the VC pin voltage, V_C, is 2 V or more, the output is supplied. When V_C is 0.8 V or less, the output is turned off. When the VC pin is open, the output is turned off.

Since the VC pin input is equivalent to the low power Schottky TTL circuit (LS-TTL), the VC pin can be driven directly by LS-TTL.

Note that the voltage applied to the VC pin should not exceed the maximum rating.

© SANKEN ELECTRIC CO., LTD. 2013

13. Design Notes

13.1. Considerations in Circuit Configuration (Only SI-3010KD)

The overcurrent protection of the SI-3010KD has the fold-back characteristic. To avoid startup failure, do not use the circuit configurations as follows:

- Constant current circuit is connected to the IC.
- CV/CC circuit is connected to the IC.
- Load 2 is stacked on Load 1 (see in Figure 13-1).
- The output voltage setting resistor is connected between the GND pin and Ground (see Figure 13-2).

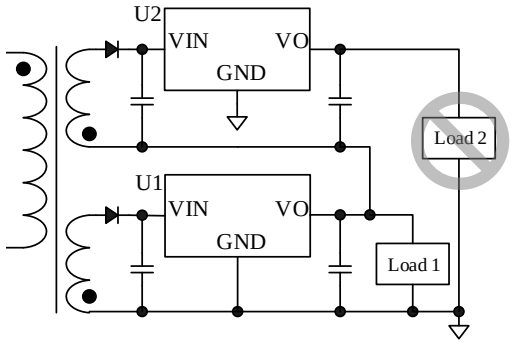

Figure 13-1 Stacked on Loads
(Do not connect Load 2.)

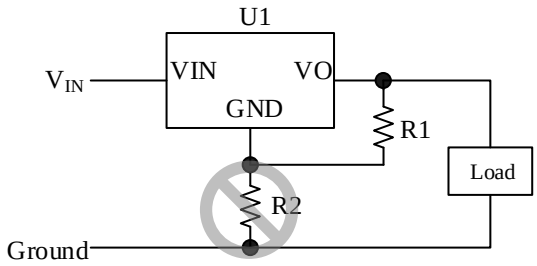

Figure 13-2 Output Voltage Setting
(Do not connect R2.)

13.2. External Components

- **Input Capacitor, C_{IN}**

The capacitor, C_{IN}, connected to the VIN pin is a bypass capacitor for suppressing noise and stabilizing voltage. Use electrolytic or ceramic capacitor for C_{IN}. The capacitance is about 0.47 µF to 22 µF.

- **Output Capacitor, C_{OUT}**

The output capacitor, C_{OUT}, is connected to the VO pin.

SI-3010KD

C_{OUT} is a capacitor for phase compensation and is an electrolytic capacitor of ≥ 47 µF. Select an electrolytic capacitor with a series equivalent resistance (ESR) in the range of 0.2 Ω to 2 Ω.

If a low ESR type capacitor such as a ceramic capacitor is used for the output capacitor, the output voltage may oscillate.

SI-3033KD

C_{OUT} is a capacitor for phase compensation and is a ceramic capacitor of ≥ 22 µF. Select a ceramic capacitor with a series equivalent resistance (ESR) of > 0.2 Ω.

If a high ESR type capacitor such as an electrolytic capacitor is used for the output capacitor, the output voltage may oscillate.

- **Protection Diode for Reverse Biasing**

If the output voltage is 3.3 V or higher, connect the diode, D1, for reverse bias protection. The IC is protected when a reverse bias is applied between input and output such as when the input voltage is turned off. D1 is not required if the output voltage is less than 3.3V.

13.3. PCB Pattern Layout

- **Input/ output Capacitor, C_{IN}, C_{OUT}**

Place C_{IN} and C_{OUT} as close as possible to the IC with a minimum length of traces to the VIN and VO pins.

- **Output Voltage Setting Resistor, R1, R2 (Only SI-3010KD)**

R1 and R2 should be placed as close as possible to the IC. R2 should be connected to the ADJ and GND pins with a minimum length of traces.

- **Ground**

Ground traces should be as wide and short as possible so that EMI levels can be reduced.

© SANKEN ELECTRIC CO., LTD. 2013

13.4. Thermal Design

Generally, the heat dissipation of an IC depends on the size and material of the board and the copper area. To improve the thermal performance, the copper area of the part where the backside of the IC is soldered should be as large as possible.

Figure13-3 shows the derating of the IC. When using the IC, ensure a sufficient margin.

Follow the procedure below to design heat dissipation.

(1) Measure the maximum ambient temperature, $T_{A(MAX)}$ of the IC.

(2) Change the input/output conditions and check the power dissipation, P_D. Calculate the maximum power dissipation, $P_{D(MAX)}$ with the Equation (4).

$$P_D = (V_{IN} - V_{OUT}) \times I_{OUT} \quad (4)$$

(3) Determine the copper area by confirming the intersection of ambient temperature and power dissipation by the thermal derating characteristics shown in Figure13-3.

For reference, Figure13-3 shows the relationship between the copper area and thermal resistance of a single-sided copper foil board, FR-4.

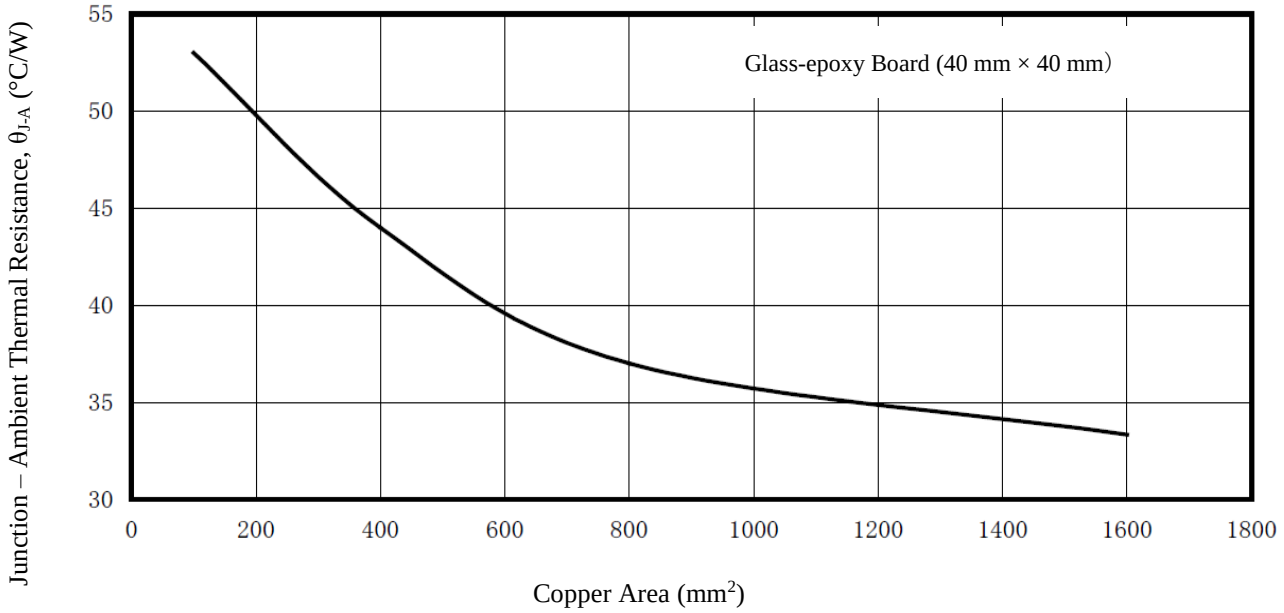

Figure13-3 Thermal Resistance – Copper Area Reference Characteristics
(Single-sided Copper Foil Board, FR-4)

© SANKEN ELECTRIC CO., LTD. 2013

Important Notes

- All data, illustrations, graphs, tables and any other information included in this document (the "Information") as to Sanken's products listed herein (the "Sanken Products") are current as of the date this document is issued. The Information is subject to any change without notice due to improvement of the Sanken Products, etc. Please make sure to confirm with a Sanken sales representative that the contents set forth in this document reflect the latest revisions before use.
- The Sanken Products are intended for use as components of general purpose electronic equipment or apparatus (such as home appliances, office equipment, telecommunication equipment, measuring equipment, etc.). Prior to use of the Sanken Products, please put your signature, or affix your name and seal, on the specification documents of the Sanken Products and return them to Sanken. When considering use of the Sanken Products for any applications that require higher reliability (such as transportation equipment and its control systems, traffic signal control systems or equipment, disaster/crime alarm systems, various safety devices, etc.), you must contact a Sanken sales representative to discuss the suitability of such use and put your signature, or affix your name and seal, on the specification documents of the Sanken Products and return them to Sanken, prior to the use of the Sanken Products. The Sanken Products are not intended for use in any applications that require extremely high reliability such as: aerospace equipment; nuclear power control systems; and medical equipment or systems, whose failure or malfunction may result in death or serious injury to people, i.e., medical devices in Class III or a higher class as defined by relevant laws of Japan (collectively, the "Specific Applications"). Sanken assumes no liability or responsibility whatsoever for any and all damages and losses that may be suffered by you, users or any third party, resulting from the use of the Sanken Products in the Specific Applications or in manner not in compliance with the instructions set forth herein.
- In the event of using the Sanken Products by either (i) combining other products or materials or both therewith or (ii) physically, chemically or otherwise processing or treating or both the same, you must duly consider all possible risks that may result from all such uses in advance and proceed therewith at your own responsibility.
- Although Sanken is making efforts to enhance the quality and reliability of its products, it is impossible to completely avoid the occurrence of any failure or defect or both in semiconductor products at a certain rate. You must take, at your own responsibility, preventative measures including using a sufficient safety design and confirming safety of any equipment or systems in/for which the Sanken Products are used, upon due consideration of a failure occurrence rate and derating, etc., in order not to cause any human injury or death, fire accident or social harm which may result from any failure or malfunction of the Sanken Products. Please refer to the relevant specification documents and Sanken's official website in relation to derating.
- No anti-radioactive ray design has been adopted for the Sanken Products.
- The circuit constant, operation examples, circuit examples, pattern layout examples, design examples, recommended examples, all information and evaluation results based thereon, etc., described in this document are presented for the sole purpose of reference of use of the Sanken Products.
- Sanken assumes no responsibility whatsoever for any and all damages and losses that may be suffered by you, users or any third party, or any possible infringement of any and all property rights including intellectual property rights and any other rights of you, users or any third party, resulting from the Information.
- No information in this document can be transcribed or copied or both without Sanken's prior written consent.
- Regarding the Information, no license, express, implied or otherwise, is granted hereby under any intellectual property rights and any other rights of Sanken.
- Unless otherwise agreed in writing between Sanken and you, Sanken makes no warranty of any kind, whether express or implied, including, without limitation, any warranty (i) as to the quality or performance of the Sanken Products (such as implied warranty of merchantability, and implied warranty of fitness for a particular purpose or special environment), (ii) that any Sanken Product is delivered free of claims of third parties by way of infringement or the like, (iii) that may arise from course of performance, course of dealing or usage of trade, and (iv) as to the Information (including its accuracy, usefulness, and reliability).
- In the event of using the Sanken Products, you must use the same after carefully examining all applicable environmental laws and regulations that regulate the inclusion or use or both of any particular controlled substances, including, but not limited to, the EU RoHS Directive, so as to be in strict compliance with such applicable laws and regulations.
- You must not use the Sanken Products or the Information for the purpose of any military applications or use, including but not limited to the development of weapons of mass destruction. In the event of exporting the Sanken Products or the Information, or providing them for non-residents, you must comply with all applicable export control laws and regulations in each country including the U.S. Export Administration Regulations (EAR) and the Foreign Exchange and Foreign Trade Act of Japan, and follow the procedures required by such applicable laws and regulations.
- Sanken assumes no responsibility for any troubles, which may occur during the transportation of the Sanken Products including the falling thereof, out of Sanken's distribution network.
- Although Sanken has prepared this document with its due care to pursue the accuracy thereof, Sanken does not warrant that it is error free and Sanken assumes no liability whatsoever for any and all damages and losses which may be suffered by you resulting from any possible errors or omissions in connection with the Information.
- Please refer to our official website in relation to general instructions and directions for using the Sanken Products, and refer to the relevant specification documents in relation to particular precautions when using the Sanken Products.
- All rights and title in and to any specific trademark or tradename belong to Sanken and such original right holder(s).

DSGN-CEZ-16003

© SANKEN ELECTRIC CO., LTD. 2013

ENTEGRECİ

Bu belge www.entegreci.com üzerinden sunulmaktadır.

Elektronik komponent tedarikinde Entegreci

Entegreci, Eskişehir merkezli, Türkiye geneline satış yapan bir elektronik komponent mağazasıdır. Entegreler (IC), mikrodenetleyiciler, transistörler, diyotlar, pasif elemanlar, konnektörler, modüller ve geliştirme kartları tek adetten seri üretim adetlerine kadar satılır. Ürün sayfalarında güncel stok durumunu, fiyatı ve datasheet bağlantısını bulabilirsiniz.

Parça koduyla arama

Üretici parça numarasını yazın; stok ve fiyatı hemen görün.

www.entegreci.com

Ürün kategorileri

Entegreden kapasitöre tüm elektronik komponent kategorileri.

Kategorilere göz atın

Üreticiler

Aradığınız üreticinin ürünlerini tek sayfada inceleyin.

Üreticileri görün

Toplu alım ve teklif

Listede olmayan ya da yüksek adetli parçalar için teklif isteyin.

Teklif isteyin

www.entegreci.com | **destek@entegreci.com** | **0850 305 90 34**

Entegreci is an online electronic components store based in Türkiye. Search by manufacturer part number to see stock, prices and datasheets for integrated circuits, microcontrollers, transistors, passive components and connectors, or request a quote for parts that are not listed.

Bu sayfa Entegreci tarafından eklenmiştir. Belgenin önceki sayfaları asıl yayıncısına aittir ve içeriği değiştirilmemiştir; en güncel sürüm için belgenin yayıncısına başvurun.