Application Note

Surface Molding Series Regulator IC

SI-3000KM series

Jun 2015 Rev.2.0

SANKEN ELECTRIC CO., LTD.

― ― ― Contents ― ― ―

1. General Description
- 1-1 Features ― ― ― ― ― ― ― ― ― ― 3
- 1-2 Application ― ― ― ― ― ― ― ― ― ― 3
- 1-3 Type ― ― ― ― ― ― ― ― ― ― 3

2. Specification
- 2-1 Package Information ― ― ― ― ― ― ― ― ― ― 4
- 2-2 Ratings ― ― ― ― ― ― ― ― ― ― 5
- 2-3 Circuit Diagram ― ― ― ― ― ― ― ― ― ― 10

3. Operational Description
- 3-1 Voltage Control ― ― ― ― ― ― ― ― ― ― 12
- 3-2 Overcurrent Protection ― ― ― ― ― ― ― ― ― ― 12
- 3-3 Thermal Shutdown ― ― ― ― ― ― ― ― ― ― 13

4. Cautions
- 4-1 External Components ― ― ― ― ― ― ― ― ― ― 14
- 4-2 Pattern Design Notes ― ― ― ― ― ― ― ― ― ― 15

5. Applications
- 5-1 Output ON / OFF Control ― ― ― ― ― ― ― ― ― ― 16
- 5-2 Thermal Design ― ― ― ― ― ― ― ― ― ― 16

6. Typical Characteristics
- 6-1 SI-3012KM ― ― ― ― ― ― ― ― ― ― 18
- 6-2 SI-3010KM ― ― ― ― ― ― ― ― ― ― 20

1. General Description

The SI-3000KM is a series regulator IC using a hyposaturation type PNP bipolar transistor in the power section and it can be used with the low difference of input/output voltages. It is provided with an ON / OFF terminal which operates in Active High mode and the current consumption of circuits at OFF time is zero.

● 1-1 Features

- Output current 1A
  Output current is 1A at maximum with the outline of TO-252-5L.
- Hyposaturation (Vdif = 0.6 Vmax / Io = 1A)
  It can be designed with low difference of input/output voltages.
- ON/OFF function
  The ON/OFF terminal which can be directly controlled by TLL logic signals is provided.
- Low current consumption
  Current consumption of circuits at OFF time is zero.
  Quiescent Current at no load is 600μA at maximum.
- High ripple attenuation ratio
  75dB: F = 100 - 120kHz at Vo = 5V
- Built-in Overcurrent protection / Thermal shutdown
  The automatic restoration and Foldback type overcurrent protection and Thermal shutdown circuit are built in.

● 1-2 Application

For on-board local power supplies, power supplies for OA equipment, stabilization of secondary output voltage of regulator and power supply for communication equipment

● 1-3 Type

- Type: Semiconductor integrated circuits (monolithic IC)
- Structure: Resin molding type (transfer molding)

2. Specification

Unit: mm

● 2-1 Package Information

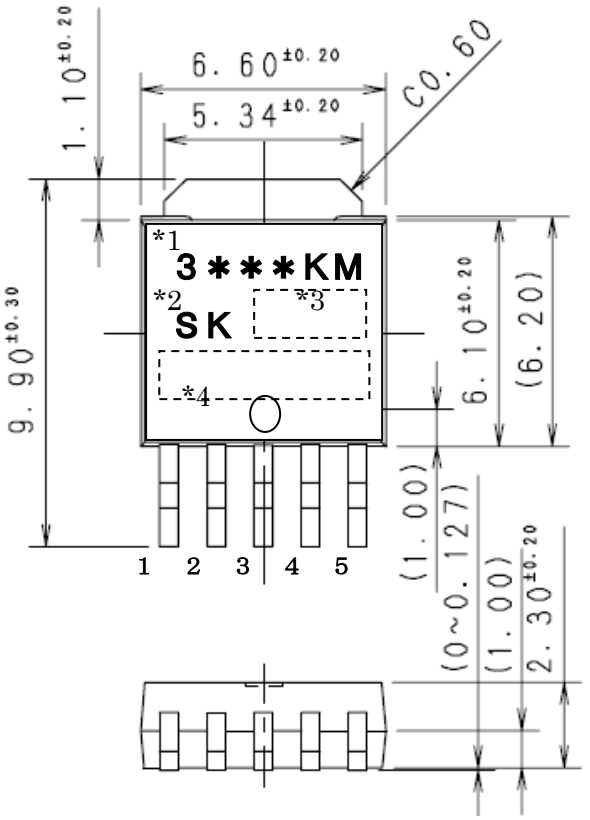

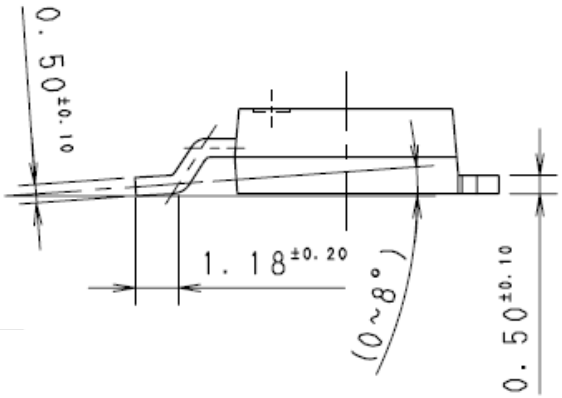

Pin assignment

1. Vc
2. VIN
3. GND
4. Vout
5. Sense (or ADJ terminal for SI-3010KM/SI-3012KM)

The stem part has same potential as No. 3 pin (GND).

Marking Method
*1:Product Name
*2:Logo Mark
*3:Lot Number
1st letter：The last digit of year
2nd letter：Month
1 to 9 for Jan. to Sept.,O for Oct.
N for Nov. D for Dec.
3rd letter：day
1 to 9day： for ” 1” to “9”
10 to 31day：for “A” to” Z”
(But,“ B”,”I”,”O”,”Q” is removed.
*4:Administer number (Seven digit)

Product mass: about 0.33 g

● 2-2 Ratings

2-2-1 Absolute Maximum Ratings Ta = 25°C

Parameter	Symbol	Ratings		Units
		SI-3012KM/3025KM /3033KM	SI-3010KM/2050KM /3090KM/3120KM	
DC Input Voltage	V_{IN}	17	35*[1]	V
Output Control Terminal Voltage	V_C	V_{IN}		V
DC Output Current	Io	1.0		A
Power Dissipation	PD*[2]	1		W
Junction Temperature	Tj	-30 ro +125		℃
Storage Temperature	Tstg	-30 to +125		℃
Thermal Resistance (Junction to Air)	θj-a	95		℃/W
Thermal Resistance (Junction to Case)	θj-c	6		℃/W

*1: A built-in input-overvoltage-protection circuit shuts down the output voltage at the Input Overvoltage Shutdown Voltage of the electrical characteristics.
*2: When mounted on glass-epoxy board of 900mm^2 (copper laminate area 4.3%).

2-2-2 Recommended Conditions

Parameter	Symbol	Ratings							Units
		SI-3012KM	SI-3025KM	SI-3033KM	SI-3010KM	SI-3050KM	SI-3090KM	SI-3120KM	
Input Voltage	V_{IN}	2.4*[2] to 6.0*[1]	2.4*[2] to 5.0*[1]	*[2] to 6.0*[1]	2.4*[2] to 27*[1]	2.4*[2] to 17*[1]	*[2] to 20*[1]	*[2] to 25*[1]	V
Output Current	Io	0 to 1.0							A
Operational Ambient Temperature	Top	-30 to 85							℃
Junction Temperature in Operation	Tj	-20 to 100							℃

*1: V_{IN} (max) and Io (max) are restricted by the relationship P_D (max) = (V_{IN} – Vo) × Io .
*2: Refer to the Dropout Voltage parameter.

2-2-3 Electrical Characteristics(1) （SI-3012KM,SI-3025KM,SI-3033KM） Ta = 25°C

Parameter		Symbol	Ratings									Units
			SI-3012KM(Vo adjustable)			SI-3025KM			SI-3033KM			
			min	typ	max	min	typ	max	min	typ	max	
Input Voltage		V_{IN}	2.4*[1]			*[1]			*[1]			V
Output Voltage Settings		V_O (V_{adj})	(1.24)	(1.28)	(1.32)	2.45	2.5	2.55	3.234	3.300	3.366	V
		Conditions	V_{IN}=3.3V,Io=10mA			V_{IN}=3.3V,Io=10mA			V_{IN}=5V,Io=10mA			
Line Regulation		ΔV_{OLINE}			15			15			15	mV
		Conditions	VIN=3.3 to 8V, Io=10mA(Vo=2.5V)			V_{IN}=3.3V,Io=10mA			V_{IN}=3.3V,Io=10mA			
Load Regulation		ΔV_{OLOAD}			40			40			40	mV
		Conditions	V_{IN}=3.3V, Io=0 to 1A(Vo=2.5V)			V_{IN}=3.3V, Io=0 to 1A			V_{IN}=5V, Io=0 to 1A			
Dropout Voltage		V_{DIF1}			0.4			0.4			0.4	V
		Conditions	Io=0.5A(Vo=2.5V)			Io=0.5A			Io=0.5A			
		V_{DIF2}			0.6			0.6			0.6	
		Conditions	Io=1A(Vo=2.5V)			Io=1A			Io=1A			
Quiescent Circuit Current		Iq			350			350			350	μA
		Conditions	V_{IN}=3.3V,Io=0A,V_C=2V, R2=24kΩ			V_{IN}=3.3V,Io=0A,V_C=2V			V_{IN}=5V,Io=0A,V_C=2V			
Circuit Current at Output OFF		Iq(OFF)			1			1			1	μA
		Conditions	V_{IN}=3.3V,V_C=0V			V_{IN}=3.3V,V_C=0V			V_{IN}=5V,V_C=0V			
Temperature Coefficient of Output Voltage		⊿Vo/⊿Ta		±0.3			±0.3			±0.3		mV/℃
		Conditions	Tj=0 to 100℃(Vo=2.5V)			Tj=0 to 100℃			Tj=0 to 100℃			
Ripple Rejection		R_{REJ}		55			55			55		dB
		Conditions	V_{IN}=3.3V,f=100 to 120Hz,Vo=2.5V			V_{IN}=3.3V,f=100 to 120Hz			V_{IN}=5V,f=100 to 120Hz			
Overcurrent Protection Starting Current[*2]		I_{S1}	1.1			1.1			1.1			A
		Conditions	V_{IN}=3.3V			V_{IN}=3.3V			V_{IN}=5V			
V_C Terminal	Control Voltage (Output ON)*3	V_C,IH	2.2			2.2			2.2			V
	Control Voltage (Output OFF)	V_C,IL			0.8			0.8			0.8	
	Control Current (Output ON)	I_C,IH			40			40			40	μA
		Conditions	V_C=2V			V_C=2V			V_C=2V			
	Control Current (Output OFF)	I_C,IL	-5	0		-5	0		-5	0		
		Conditions	V_C=0V			V_C=0V			V_C=0V			

*1: Refer to the clause of a difference in input and output voltage.

*2: Is1 is specified at the 5% drop point of output voltage Vo on the condition that VIN = overcurrent protection starting current, Io = 10mA.

*3: Output is OFF when the output control terminal Vc is open. Each input level is equivalent to LS-TTL level. Therefore, the device can be driven directly by LS-TTLs.

Attention …

As PD=(V_{IN}－Vo)×Io, V_{IN}(MAX) and Io(MAX) must be referred to the data of P17, copper area vs power dissipation upon actual applications.

2-2-3 Electrical Characteristics(2) （SI-3010KM,SI-3050KM,SI-3090KM） Ta = 25°C

Parameter	Symbol	Ratings									Units
		SI-3010KM(Vo adjustable)			SI-3050KM			SI-3090KM			
		min	typ	max	min	typ	max	min	typ	max	
Input Voltage	V_{IN}	2.4*[1]			*[1]			*[1]			V
Output Voltage Settings	$V_{O\ or}$ (V_{adj})	(0.98)	(1.00)	(1.02)	4.90	5.00	5.10	8.82	9.00	9.18	V
	Conditions	V_{IN}=7V,Io=10mA			V_{IN}=7V,Io=10mA			V_{IN}=11V,Io=10mA			
Line Regulation	⊿V_{OLINE}			30			75			54	mV
	Conditions	VIN=6 to 11V, Io=10mA(Vo=5V)			V_{IN}=6 to 11V,Io=10mA			V_{IN}=10 to 15V,Io=10mA			
Load Regulation	⊿V_{OLOAD}			75			40			40	mV
	Conditions	V_{IN}=7V, Io=0 to 1A(Vo=5V)			V_{IN}=7V, Io=0 to 1A			V_{IN}=11V, Io=0 to 1A			
Dropout Voltage	V_{DIF1}			0.3			0.3			0.3	V
	Conditions	Io=0.5A(Vo=5V)			Io=0.5A			Io=0.5A			
	V_{DIF2}			0.6			0.6			0.6	
	Conditions	Io=1A(Vo=5V)			Io=1A			Io=1A			
Quiescent Circuit Current	Iq			600			600			600	μA
	Conditions	V_{IN}=7V,Io=0A,V_C=2V, R2=10kΩ			V_{IN}=7V,Io=0A,V_C=2V			V_{IN}=11,Io=0A,V_C=2V			
Circuit Current at Output OFF	Iq(OFF)			1			1			1	μA
	Conditions	V_{IN}=7V,V_C=0V			V_{IN}=7V,V_C=0V			V_{IN}=11V,V_C=0V			
Temperature Coefficient of Output Voltage	⊿Vo/⊿Ta		±0.5			±0.5			±1.0		mV/℃
	Conditions	Tj=0 to 100℃(Vo=5V)			Tj=0 to 100℃			Tj=0 to 100℃			
Ripple Rejection	R_{REJ}		75			75			68		dB
	Conditions	V_{IN}=7V,f=100 to 120Hz,Vo=5V			V_{IN}=7V,f=100 to 120Hz			V_{IN}=11V,f=100 to 120Hz			
Overcurrent Protection Starting Current*[2]	I_{S1}	1.1			1.1			1.1			A
	Conditions	V_{IN}=7V			V_{IN}=7V			V_{IN}=11V			
V_C Terminal: Control Voltage (Output ON)*3	V_C,IH	2.0			2.0			2.0			V
V_C Terminal: Control Voltage (Output OFF)	V_C,IL			0.8			0.8			0.8	
V_C Terminal: Control Current (Output ON)	I_C,IH			40			40			40	μA
	Conditions	V_C=2V			V_C=2V			V_C=2V			
V_C Terminal: Control Current (Output OFF)	I_C,IL	-5	0		-5	0		-5	0		
	Conditions	V_C=0V			V_C=0V			V_C=0V			
Input Overvoltage Shutdown Voltage	V_{OVP}	33			26			30			V
	Conditions	Io=10mA			Io=10mA			Io=10mA			

*1: Refer to the clause of a difference in input and output voltage.

*2: Is1 is specified at the 5% drop point of output voltage Vo on the condition that VIN = overcurrent protection starting current, Io = 10mA.

*3: Output is OFF when the output control terminal Vc is open. Each input level is equivalent to LS-TTL level. Therefore, the device can be driven directly by LS-TTLs.

Attention …

SI-3010KM,SI-3050KM,SI-3090KM cannot be used in the following applications because the built-in foldback-type overcurrent protection may cause errors during start-up stage;

(1) Constant current load (2) Positive and negative power supply (3) Series-connected power supply (4) Vo adjustment by raising ground voltage

As PD=(V_{IN}－Vo)×Io, V_{IN}(MAX) and Io(MAX) must be referred to the data of P17, copper area vs power dissipation upon actual applications.

2-2-3 Electrical Characteristics(3) （SI-3120KM） Ta = 25°C

Parameter		Symbol	Ratings			Units
			SI-3120KM			
			min	typ	max	
Input Voltage		V_{IN}	*1			V
Output Voltage Settings		$V_{O\ or}$ (V_{adj})	11.76	12.00	12.24	V
		Conditions	V_{IN}=7V,Io=10mA			
Line Regulation		⊿V_{OLINE}			72	mV
		Conditions	VIN=13 to 18V, Io=10mA			
Load Regulation		⊿V_{OLOAD}			180	mV
		Conditions	V_{IN}=14V, Io=0 to 1A			
Dropout Voltage		V_{DIF1}			0.3	V
		Conditions	Io=0.5A			
		V_{DIF2}			0.6	
		Conditions	Io=1A			
Quiescent Circuit Current		Iq			600	μA
		Conditions	V_{IN}=14V,Io=0A,V_C=2V,			
Circuit Current at Output OFF		Iq(OFF)			1	μA
		Conditions	V_{IN}=7V,V_C=0V			
Temperature Coefficient of Output Voltage		⊿Vo/⊿Ta		±1.5		mV/℃
		Conditions	Tj=0 to 100℃			
Ripple Rejection		R_{REJ}		66		dB
		Conditions	V_{IN}=14V,f=100 to 120Hz			
Overcurrent Protection Starting Current*2		I_{S1}	1.1			A
		Conditions	V_{IN}=14V			
V_C Terminal	Control Voltage (Output ON)*3	V_C,IH	2.0			V
	Control Voltage (Output OFF)	V_C,IL			0.8	
	Control Current (Output ON)	I_C,IH			40	μA
		Conditions	V_C=2V			
	Control Current (Output OFF)	I_C,IL	-5	0		
		Conditions	V_C=0V			
Input Overvoltage Shutdown Voltage		V_{OVP}	33			V
		Conditions	Io=10mA			

*1: Refer to the clause of a difference in input and output voltage.

*2: Is1 is specified at the 5% drop point of output voltage Vo on the condition that VIN = overcurrent protection starting current, Io = 10mA.

*3: Output is OFF when the output control terminal Vc is open. Each input level is equivalent to LS-TTL level. Therefore, the device can be driven directly by LS-TTLs.

Attention …
SI-3120KM cannot be used in the following applications because the built-in foldback-type overcurrent protection may cause errors during start-up stage;
(1) Constant current load (2) Positive and negative power supply (3) Series-connected power supply (4) Vo adjustment by raising ground voltage
As PD=(VIN－Vo)×Io, VIN(MAX) and Io(MAX) must be referred to the data of P17, copper area vs power dissipation upon actual applications.

● 2-3 Circuit Diagram

2-3-1 Block Diagram

（SI-3010KM,SI-3012KM）

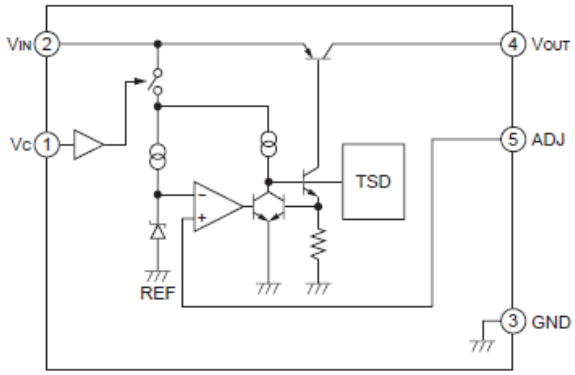

（SI-3025KM,SI-3033KM,SI-3050KM,SI-3090KM,SI-3120KM）

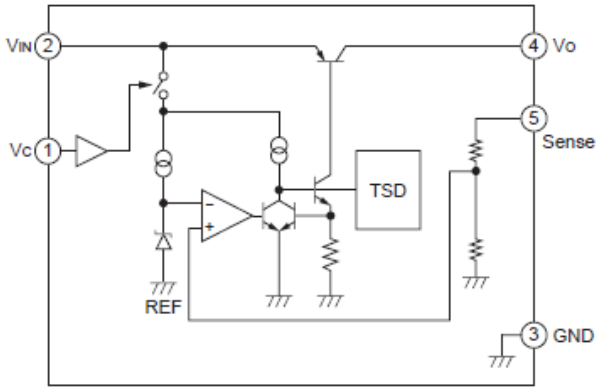

2-3-2 Typical Connection Diagram

（SI-3010KM,SI-3012KM）

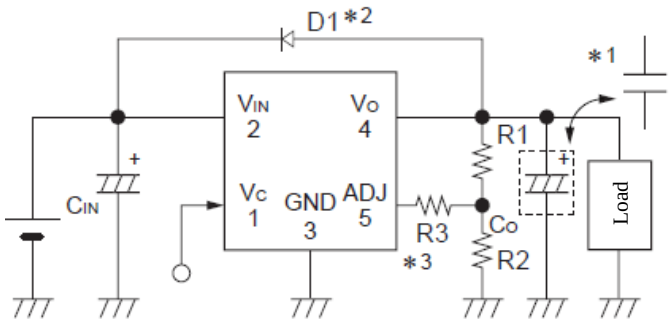

（SI-3025KM,SI-3033KM,SI-3050KM,SI-3090KM,SI-3120KM）

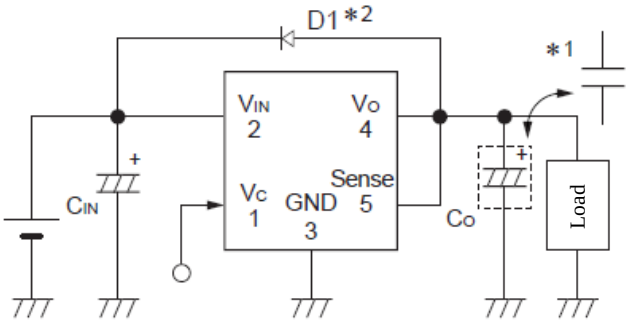

*1　For SI-3012KM,SI-3025KM,SI-3033KM.
It is the setup to use a ultra-low ESR capacitor such as a ceramics-capacitor for Co with these models.
When an electrolytic-capacitor is used for Co, they may oscillate at low-temperature.
*1　For SI-3010KM,SI-3050KM,SI-3090KM,SI-3120KM.
As for these models,they may oscillate when a ultra-low ESR capacitor such as ceramic-capacitor is used for Co.

*2: D1: Reverse biased protection diodes
In the case of reverse bias between input and output, this diode will be required.
(Recommended diodes: SJPL-H2 made by Sanken)
It is unnecessary in case of Vo≦3.3V.
R1, R2: resistors for setting output voltages
Output voltages can be adjusted by connecting R1 and R2 as shown in the above figure.
R2: 10kΩ is recommended.(In case of the SI-3120KM,24kΩ is recommended.)

$$R1=(Vo-V_{ADJ}) \ / \ (V_{ADJ}/R2)$$

*3: In the case that Vo ≦1.5V is set, R3 should be inserted. 10kΩ is recommended for R3.
Regardless of the setup voltage, R3 is unnecessary in case of the SI-3012KM.

3. Operational Description

● 3-1 Voltage Control

In the SI-3000KM series, the driving circuit is controlled by comparing the reference voltage with the ADJ terminal voltage (voltage divided by Vo detection resistor in fixed output products) to stabilize the output voltage by varying the voltage between the emitter and collector of a main PNP power transistor. The product of voltage between emitter and collector and the output current at this moment is consumed as heat.

● 3-2 Overcurrent Protection

3-2-1 Overcurrent Protection Characterization for SI-3012KM,SI-3025KM,SI-3033KM

The Drooping type overcurrent protection function is provided in these models. In the case of the series regulator, as the output voltage drops subject to the overcurrent protection, the difference of input/output voltages increases to cause significant heating. Special care should be taken for the current limiting type overcurrent protection, since large current flows continuously.

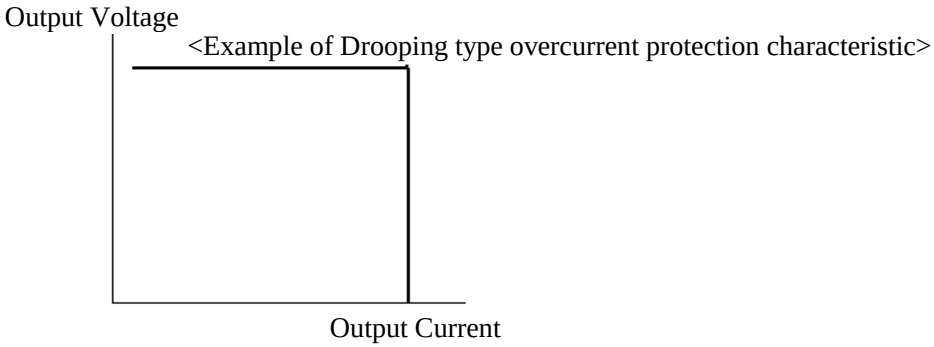

3-2-2 Overcurrent Protection Characterization for SI-3010KM,SI-3050KM,SI-3090KM,SI-3120KM

The foldback type overcurrent protection function is provided in these models. After operation of the overcurrent protection function, if the load resistance decreases and the output voltage drops, the output current of products is squeezed to reduce the increase of loss. However, in the case of the foldback type overcurrent protection function, since current limiting is also made at start-up, the function may not be used for the following applications, as it may cause a start-up error.

(1) Constant current loads
(2) Plus/minus power supply
(3) DC power supply
(4) Output voltage adjustment by grounding-up

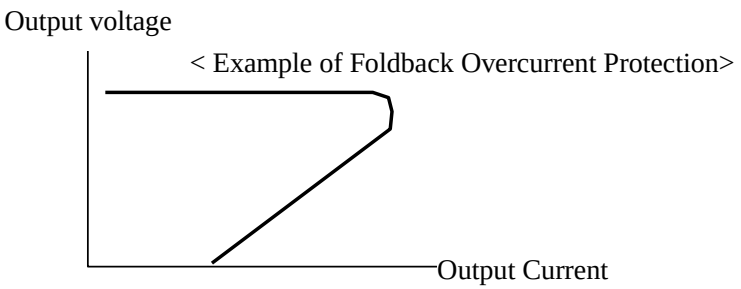

● 3-3 Thermal Shutdown

This IC is provided with the overheat protection circuit which detects the semiconductor junction temperature of the IC to limit the driving current, when the junction temperature exceeds the set value (around 150°C). Since the minimum operating temperature of the overheat protection circuit is 130°C, the thermal design of Tj <125°C is required. Since the overheat protection has no hysteresis, as soon as the overload state is released and Tj falls below the set temperature, the normal operation is automatically restored. When the overheat protection function is operated in the overload state, the output voltage falls, but at the same time the output current is decreased and in the consequence, overheat protection operation and automatic restoration are repeated in a short interval, resulting eventually in the waveforms of output voltage oscillation.

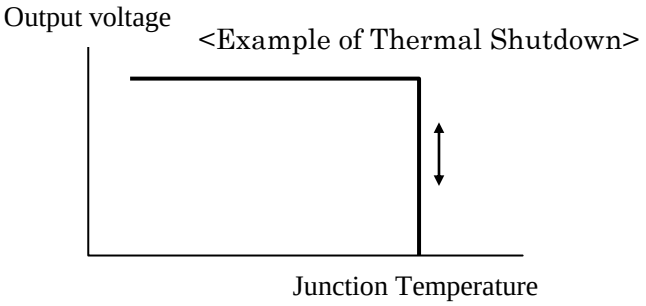

*Note for thermal shutdown characteristic

This circuit protects the IC against overheat resulting from the instantaneous short circuit, but it should be noted that this function does not assure the operation including reliability in the state that overheat continues due to long time short circuit.

4. Cautions

● 4-1 External Components

4-1-1 Input Capacitor CIN

The input capacitor is required to eliminate noise and stabilize the operation and values of 0.47μF - 22μF are recommended. Any of ceramic capacitors or electrolytic ones may be used for the input capacitor.

4-1-2 Output Capacitor Co

Co for SI-3010KM,SI-3050KM,SI-3090KM,SI-3120KM

In the output capacitor Co, larger capacitance than the recommended value is required for phase compensation. Equivalent series resistance values (ESR) of capacitors are limited, and depending on products, therefore the type of recommended capacitors is limited.
Recommended ESR values for SI-3010KM,SI-3050KM,SI-3090KM,SI-3120KM: 2Ω > ESR > 0.2Ω
It is recommended to use electrolytic capacitors. When capacitors with ultra-low ESR such as ceramic capacitors, functional polymer capacitors,OS-capacitors etc., are used, phase margin is decreased, possibly causing the oscillation of output voltage. Therefore these capacitors can not be used.

Co for SI-3012KM,SI-3025KM,SI-3033KM
Using a ceramics capacitor and a function polymer capacitor, OS-capacitor etc., is recommended.
As for these models,when a big-ESR capacitor such as electrolytic-capacitors was used, phase margin is decreased and possibly causing the oscillation of output voltage. ESR's increase in the low temperature condition. Therefore,
an electrolytic-capacitor can't be recommended because output may oscillate at a low temperature even when the output doesn't oscillate at a room temperature.

4-1-3 Reverse bias protection diode D1

In the case of falling-down of the input voltage, it is recommended to insert a protection diode D1 against the reverse bias between input and output. However, in the case of setting the Vout < 3.3V or lower, D1 is not required including the case of reverse bias. In order to select a suitable D1, it should be taken into consideration that the diode has adequate forward current withstand voltage against the instantaneous discharge of energy stored in output capacitor Co.

The permissible value of the forward current per unit time of diode is specified in I_{FSM} (A) and in the case of our diode, it is specified at 50Hz half wave (10ms), but it should be noted that different companies may specify different times. The selection of diode should be made by converting the specified time into the actual discharging time so as to meet the required I_{FSM} (A). The discharging time of Co is normally shorter than 1ms, but it is recommended to do the conversion with 1ms in consideration of margin.

For conversion into I_{FSM}, calculation should be made by using the equations (1) and (2).

$$\left(\frac{I_{FSM}}{\sqrt{2}}\right)^2 * t1 = X \qquad \text{--- (1)}$$

As for I_{FSM}, please refer to the catalog of each company.

t1 = specified time in catalog of each company

$$\text{Converted IFSM} = \sqrt{\frac{2 * X}{t2}} \qquad \text{--- (2)}$$

t2: converted time (discharging time of Co)

<Graph 1>

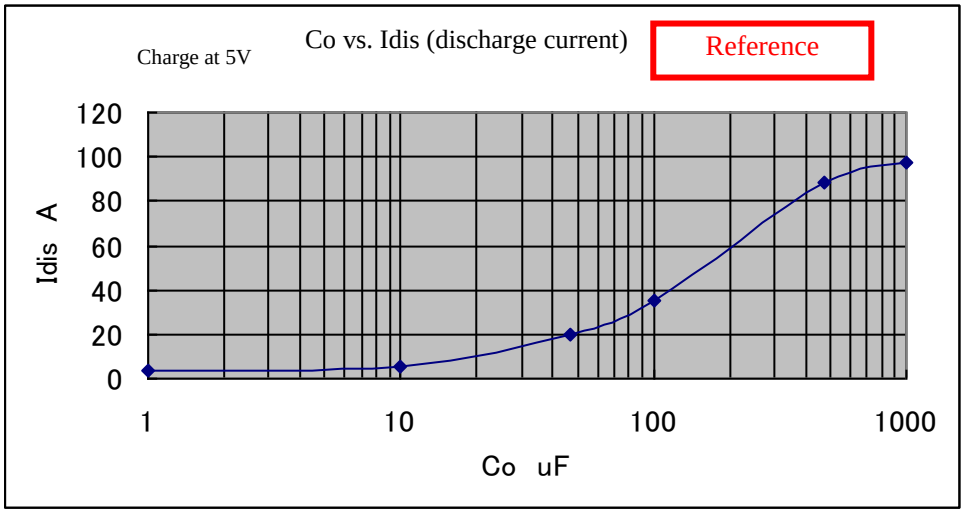

On the assumption of Cout = 470μF, I_{FSM} of around 90A or more (in 1ms time period) is required and according to our specifications of diode, I_{FSM} is specified for 10ms, therefore the diode of 30A has the tolerated dose of 94.8A (in 1ms) to prove that it is usable.

● 4-2 Pattern Design Notes

4-2-1 Input / Output Capacitor

The input capacitor C1 and the output capacitor C2 should be connected to the IC as close as possible. If the rectifying capacitor for AC rectifier circuit is on the input side, it can be used as an input capacitor. However, if it is no close to the IC, the input capacitor should be connected in addition to the rectifying capacitor.

4-2-2 ADJ Terminal (Output Voltage Set-up for SI-3010KM & SI-3012KM)

The ADJ terminal is a feedback detection terminal for controlling the output voltage. The output voltage set-up is achieved by connecting R1 and R2.
SI-3010KM: it should be set in a manner that I_{ADJ} is around 100μA.
SI-3012KM: it should be set in a manner that I_{ADJ} is around 50μA.

R1, R2 and output voltage can be obtained by the following equations:

$I_{ADJ}=V_{ADJ}/R2$

*V_{ADJ} = 1. 0V ± 2% (SI-3010KM), R2 = 10kΩ recommended
*V_{ADJ} = 1. 28V ± 3% (SI-3012KM), R2 = 24kΩ recommended

$R1 = (Vo-V_{ADJ}) / I_{ADJ}$ $R2 = V_{ADJ} / I_{ADJ}$

$Vout = R1\times (V_{ADJ} / R2) + V_{ADJ}$

5. Applications

● 5-1 Output ON / OFF Control

The ON/OFF control of output can be made by directly applying voltage to No. 1 Vc terminal. When the Vc terminal is open, the operation is in OFF. The Vc terminal is in OFF below 0.8V and in ON at above 2V.

● 5-2 Thermal Design

5-2-1 Calculation of heat dissipation

Heat generation of the surface mounting IC is generally dependent on size, material and copper foil area of the mounted printed circuit board. Full attention should be paid to heat dissipation and adequate margin be taken into consideration at thermal design. In order to enhance the heat dissipation effect, it is recommended to enlarge the copper foil area connected to the stem part on the back side of the product. The copper foil area of the printed circuit board significantly affects the heat dissipation effect.

As the junction temperature Tj (MAX) is an inherent value, it must be observed strictly. For this purpose, heat sink design (thermal resistance of board) which is appropriate for Pd (MAX) and Ta MAX is required. This is graphically shown in the heat derating curve for easy understanding. The heat dissipation design is done in the following procedure.

1) The maximum ambient temperature in the set Ta MAX is obtained.
2) The maximum loss PdMAX which varies the input/output conditions is obtained.
Pd = (V_{IN} - Vout) × Iout
3) The area of copper foil is determined from the intersection point in the heat derating curve below shown.

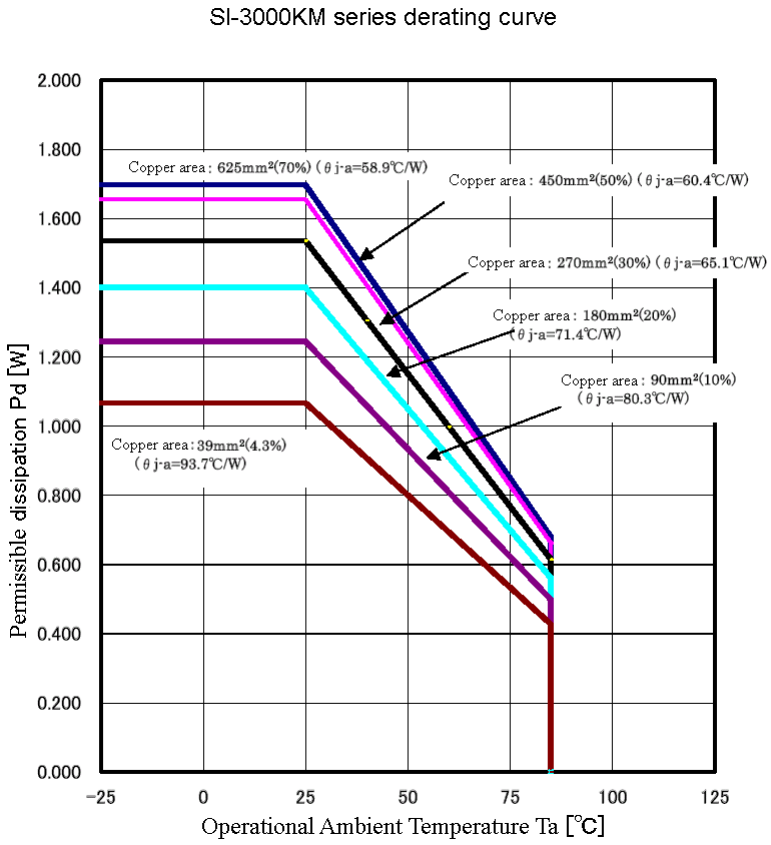

For reference information, the graph of copper foil area vs. thermal resistance between junction temperature and ambient temperature θj-a and the graph of copper foil area vs. permissible dissipation that both are in the single side copper foil board FR - 4 are shown below.

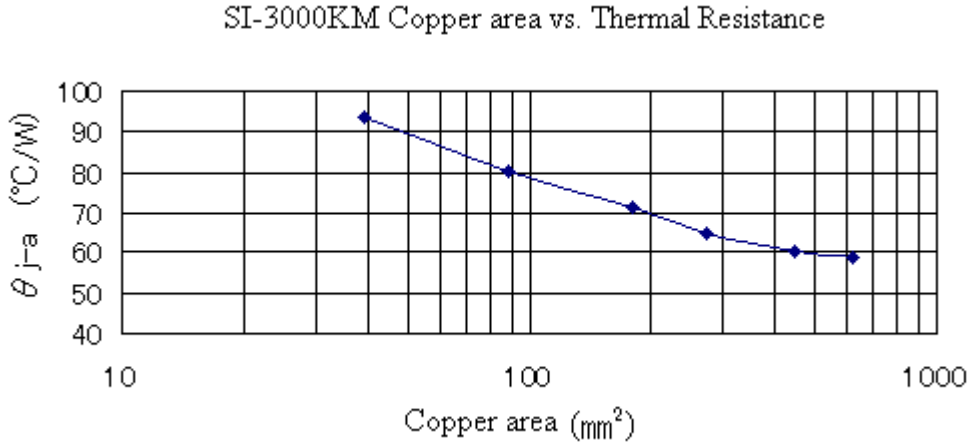

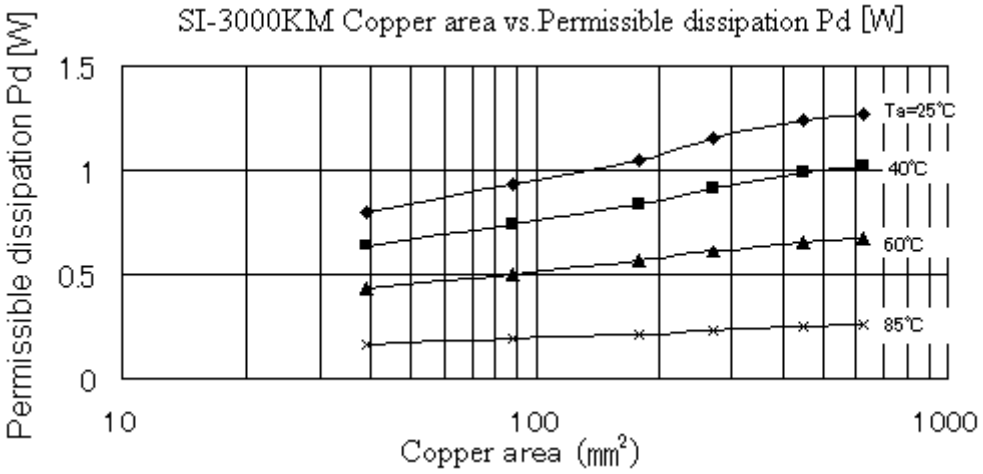

6. Typical Characteristics

6.1 SI-3012KM

(Ta = 25°C) *Set Vout = 2.5V (R2 = 24kΩ)

(1) Output current vs. Dropout voltage

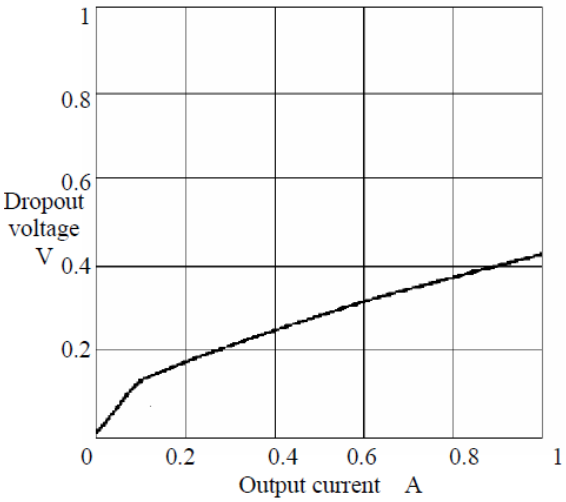

(2) Input voltage vs. Output voltage

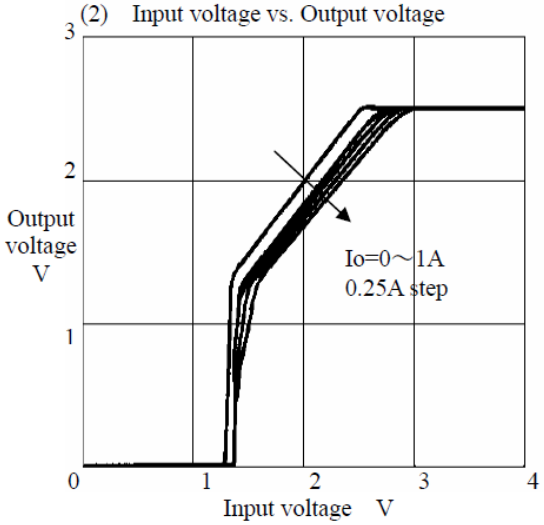

(3) Line regulation

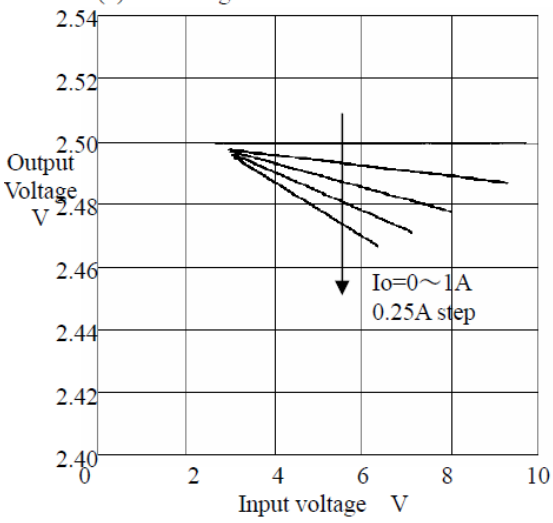

(4) Load regulation

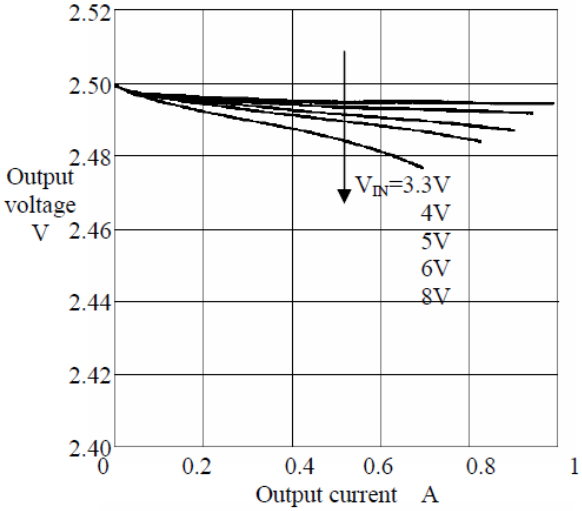

(5) Over current protection

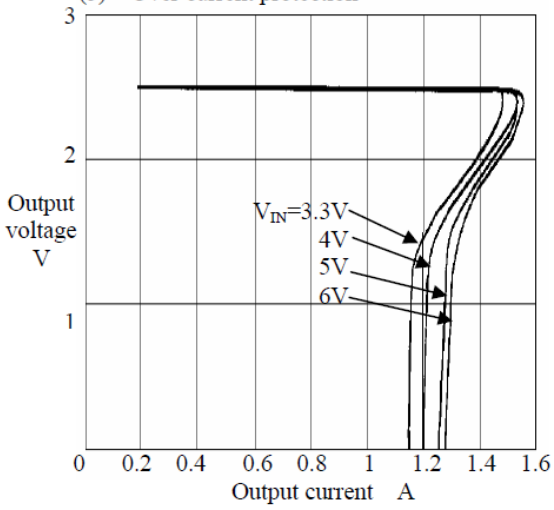

(6) Input voltage vs. Quiescent current

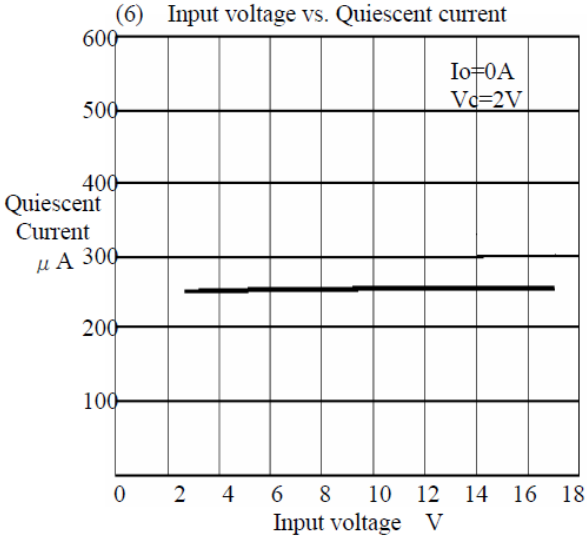

(7) Input voltage vs. GND current

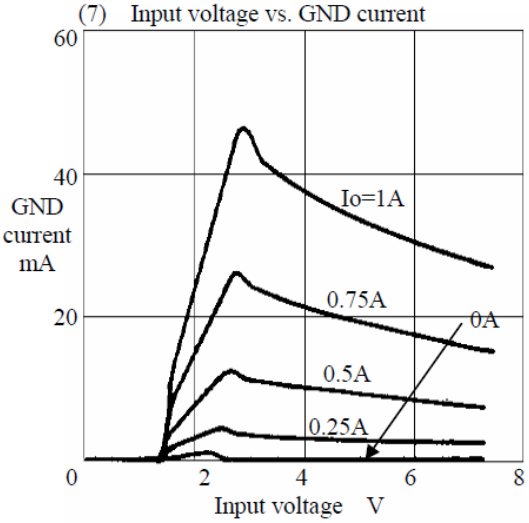

(8) Control terminal voltage vs. Output voltage

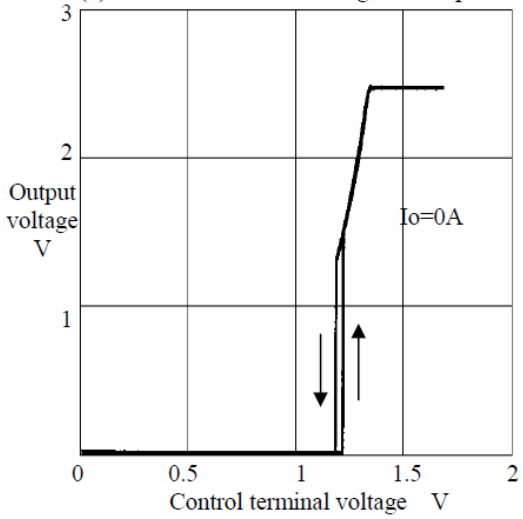

(9) Control terminal voltage vs. Control terminal current

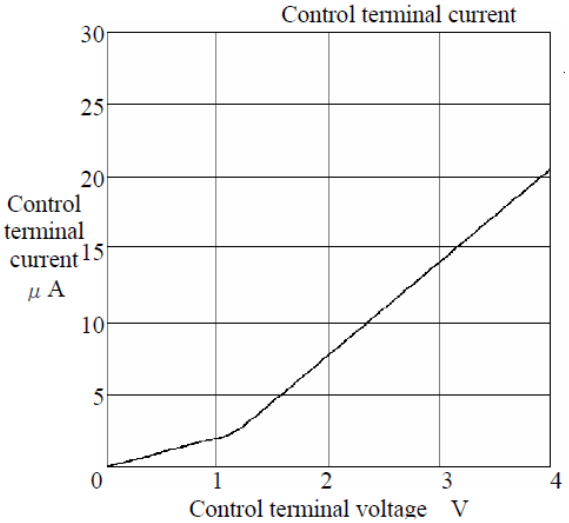

(10) Thermal protection

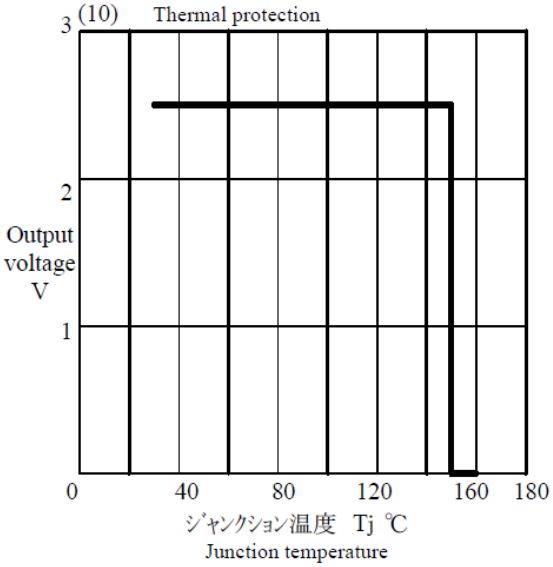

6.1 SI-3010KM

(Ta = 25°C) *Set Vout = 5V (R2 = 10kΩ)

(1) Output current vs. Dropout voltage

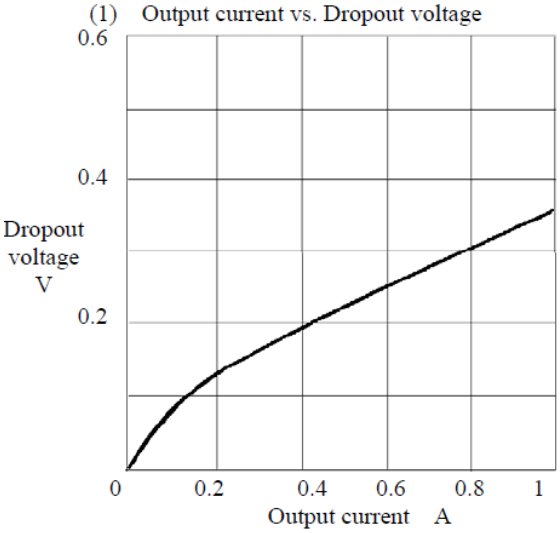

(4) Load regulation

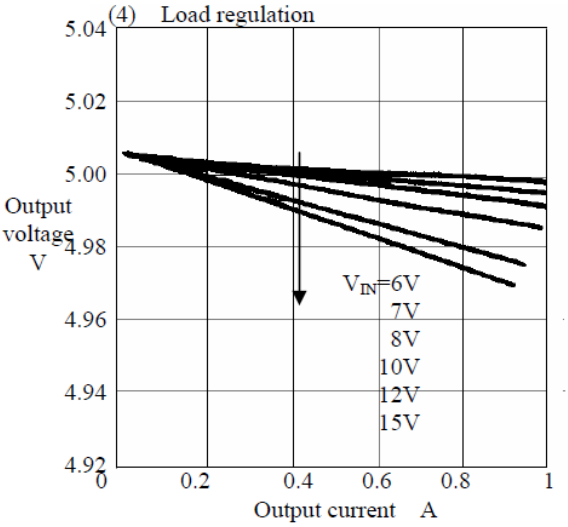

(2) Input voltage vs. Output voltage

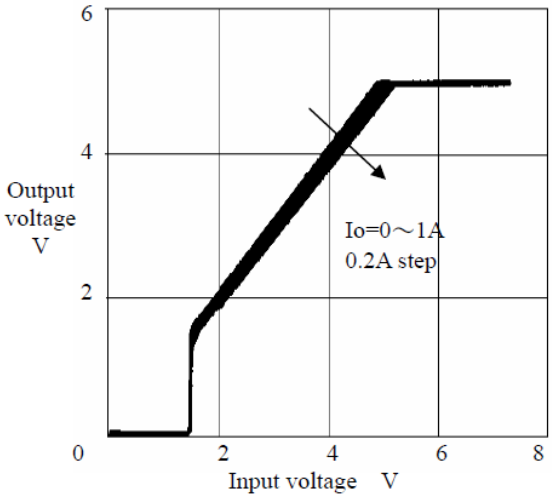

(5) Over current protection

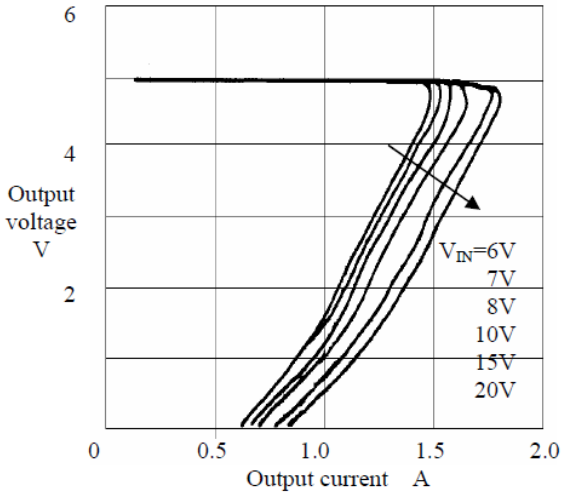

(3) Line regulation

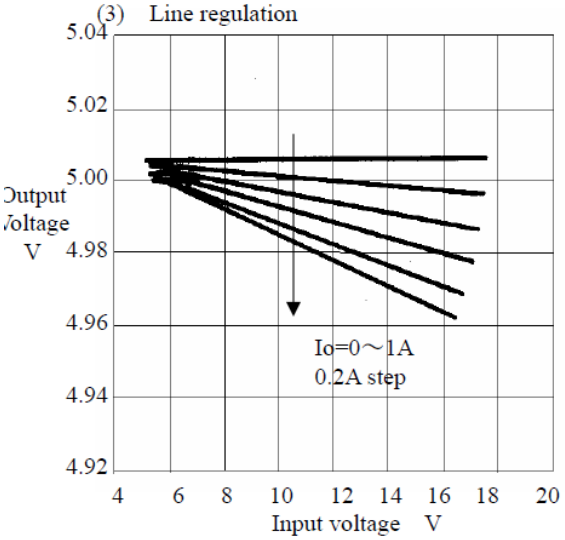

(6) Input voltage vs. Quiescent current

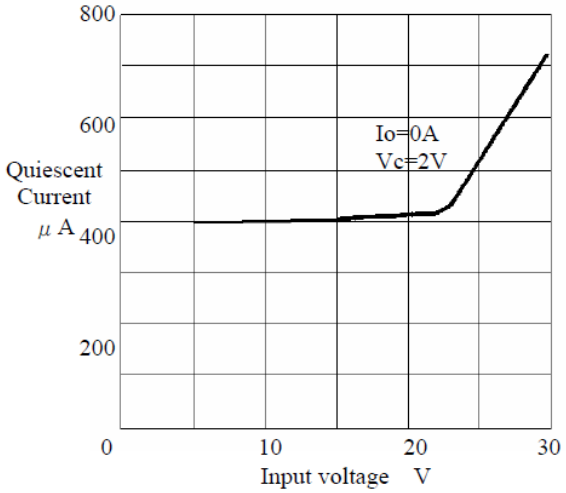

(7) Input voltage vs. GND current

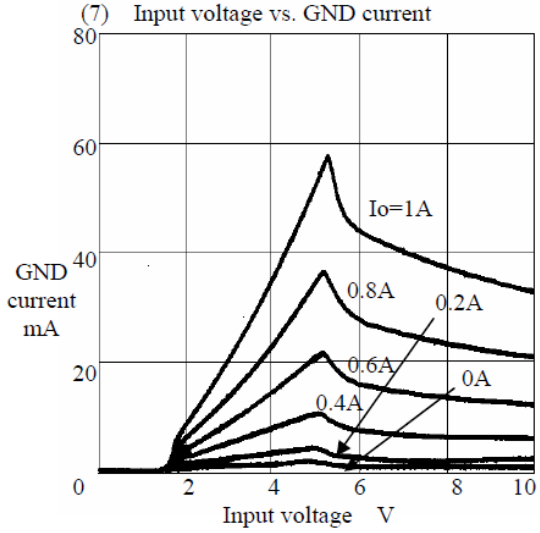

(8) Control terminal voltage vs. Output voltage

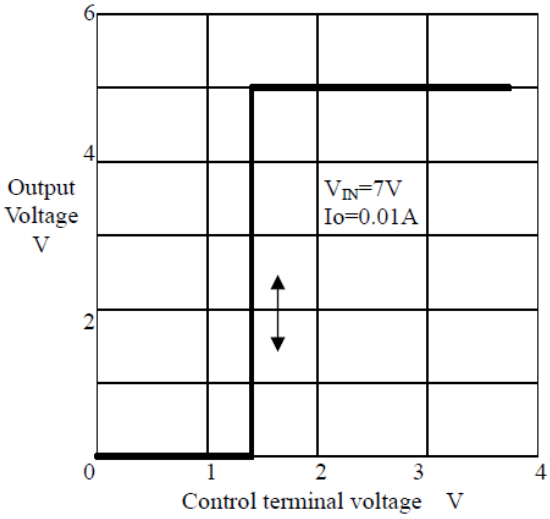

(9) Control terminal voltage vs. Control terminal current

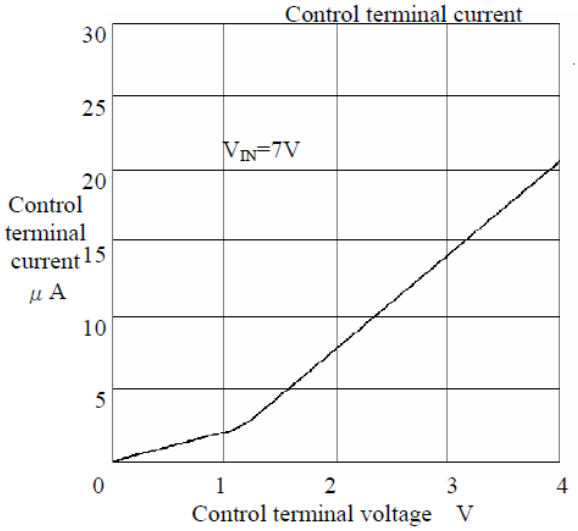

(10) Thermal protection

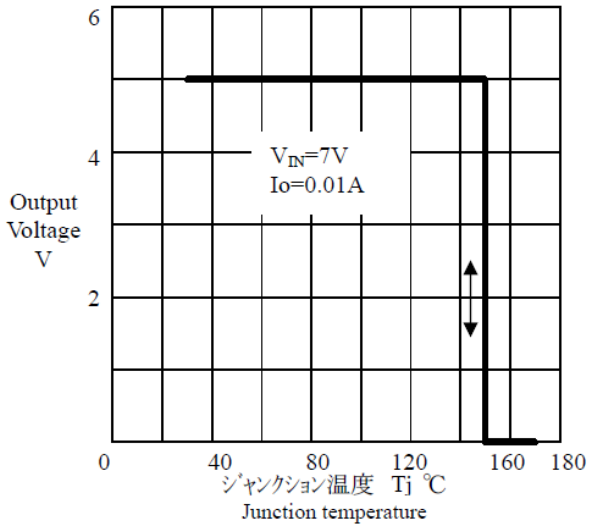

(11) Over Voltage protection

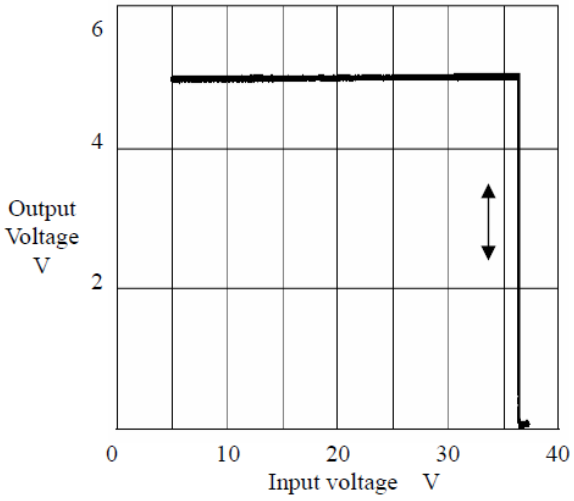

Notice

- The contents of this description are subject to change without prior notice for improvement etc. Please make sure that any information to be used is the latest one.
- Any example of operation or circuitry described in this application note is only for reference, and we are not liable to any infringement of industrial property rights, intellectual property rights or any other rights owned by third parties resulting from such examples.
- In the event that you use any product described here in combination with other products, please review the feasibility of combination at your responsibility.
- Although we endeavor to improve the quality and reliability of our product, in the case of semi-conductor components, defects or failures which occur at a certain rate of probability are inevitable. The user should take into adequate consideration the safety design in the equipment or the system in order to prevent accidents causing death or injury, fires, social harms etc..
- Products described here are designed to be used in the general-purpose electronic equipment (home appliances, office equipment, communication terminals, measuring equipment etc.). If used in the equipment or system requiring super-high reliability (transport machinery and its control equipment, traffic signal control equipment, disaster/crime prevention system, various safety apparatus etc.), please consult with our sales office. Please do not use our product for the equipment requiring ultrahigh reliability (aerospace equipment, atomic control, medical equipment for life support etc.) without our written consent.
- The products described here are not of radiation proof type.
- The contents of this brochure shall not be transcribed nor copied without our written consent.

ENTEGRECİ

Bu belge www.entegreci.com üzerinden sunulmaktadır.

Elektronik komponent tedarikinde Entegreci

Entegreci, Eskişehir merkezli, Türkiye geneline satış yapan bir elektronik komponent mağazasıdır. Entegreler (IC), mikrodenetleyiciler, transistörler, diyotlar, pasif elemanlar, konnektörler, modüller ve geliştirme kartları tek adetten seri üretim adetlerine kadar satılır. Ürün sayfalarında güncel stok durumunu, fiyatı ve datasheet bağlantısını bulabilirsiniz.

Parça koduyla arama

Üretici parça numarasını yazın; stok ve fiyatı hemen görün.

www.entegreci.com

Ürün kategorileri

Entegreden kapasitöre tüm elektronik komponent kategorileri.

Kategorilere göz atın

Üreticiler

Aradığınız üreticinin ürünlerini tek sayfada inceleyin.

Üreticileri görün

Toplu alım ve teklif

Listede olmayan ya da yüksek adetli parçalar için teklif isteyin.

Teklif isteyin

www.entegreci.com | **destek@entegreci.com** | **0850 305 90 34**

Entegreci is an online electronic components store based in Türkiye. Search by manufacturer part number to see stock, prices and datasheets for integrated circuits, microcontrollers, transistors, passive components and connectors, or request a quote for parts that are not listed.

Bu sayfa Entegreci tarafından eklenmiştir. Belgenin önceki sayfaları asıl yayıncısına aittir ve içeriği değiştirilmemiştir; en güncel sürüm için belgenin yayıncısına başvurun.