RJK0660DPA

60V, 40A, 5.1mΩ max.
N Channel Power MOS FET
High Speed Power Switching

R07DS0346EJ0300
Rev.3.00
Apr 09, 2013

Features

- High speed switching
- Low drive current
- High density mounting
- Low on-resistance
- Pb-free
- Halogen-free

Outline

RENESAS Package code: PWSN0008DE-A
(Package name: WPAK(3F))

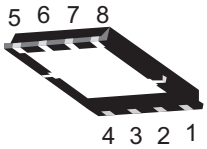

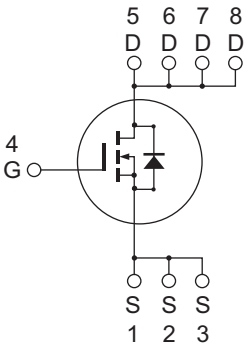

1, 2, 3	Source
4	Gate
5, 6, 7, 8	Drain

Absolute Maximum Ratings

(Ta = 25°C)

Item	Symbol	Ratings	Unit
Drain to source voltage	V_{DSS}	60	V
Gate to source voltage	V_{GSS}	±20	V
Drain current	I_D	40	A
Drain peak current	$I_{D(pulse)}$ Note1	160	A
Body-drain diode reverse drain current	I_{DR}	40	A
Avalanche current	I_{AP} Note 2	20	A
Avalanche energy	E_{AS} Note 2	30	mJ
Channel dissipation	Pch Note3	65	W
Channel to case thermal impedance	θch-c Note3	1.93	°C/W
Channel temperature	Tch	150	°C
Storage temperature	Tstg	–55 to +150	°C

Notes: 1. PW ≤ 10 μs, duty cycle ≤ 1%
2. Value at Tch = 25°C, Rg ≥ 50 Ω
3. Tc = 25°C

Electrical Characteristics

(Ta = 25°C)

Item	Symbol	Min	Typ	Max	Unit	Test Conditions
Drain to source breakdown voltage	$V_{(BR)DSS}$	60	—	—	V	I_D = 10 mA, V_{GS} = 0 V
Gate to source leak current	I_{GSS}	—	—	±0.1	μA	V_{GS} = ±20 V, V_{DS} = 0 V
Zero gate voltage drain current	I_{DSS}	—	—	1	μA	V_{DS} = 60 V, V_{GS} = 0 V
Gate to source cutoff voltage	$V_{GS(off)}$	2.0	—	4.0	V	V_{DS} = 10 V, I_D = 1 mA
Static drain to source on state resistance	$R_{DS(on)}$	—	4.2	5.1	mΩ	I_D = 20 A, V_{GS} = 10 V [Note4]
Forward transfer admittance	$\|y_{fs}\|$	—	60	—	S	I_D = 20 A, V_{DS} = 10 V [Note4]
Input capacitance	Ciss	—	3600	—	pF	V_{DS} = 10 V, V_{GS} = 0 V, f = 1 MHz
Output capacitance	Coss	—	830	—	pF	
Reverse transfer capacitance	Crss	—	230	—	pF	
Gate Resistance	Rg	—	1.1	—	Ω	
Total gate charge	Qg	—	45	—	nC	V_{DD} = 25 V, V_{GS} = 10 V, I_D = 40 A
Gate to source charge	Qgs	—	20	—	nC	
Gate to drain charge	Qgd	—	7.5	—	nC	
Turn-on delay time	$t_{d(on)}$	—	18	—	ns	V_{GS} = 10 V, I_D = 20 A, V_{DD} ≅ 30 V, R_L = 1.5 Ω, Rg = 4.7 Ω
Rise time	t_r	—	14	—	ns	
Turn-off delay time	$t_{d(off)}$	—	43	—	ns	
Fall time	t_f	—	11	—	ns	
Body–drain diode forward voltage	V_{DF}	—	0.8	1.1	V	I_F = 40 A, V_{GS} = 0 V [Note4]
Body–drain diode reverse recovery time	t_{rr}	—	47	—	ns	I_F = 40 A, V_{GS} = 0 V di_F/dt = 100 A/μs

Notes: 4. Pulse test

Main Characteristics

Power vs. Temperature Derating

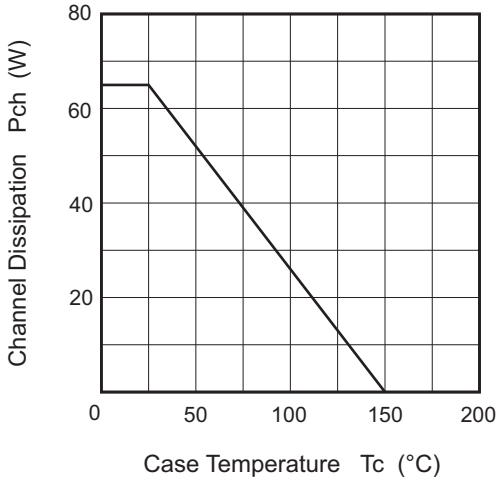

Maximum Safe Operation Area

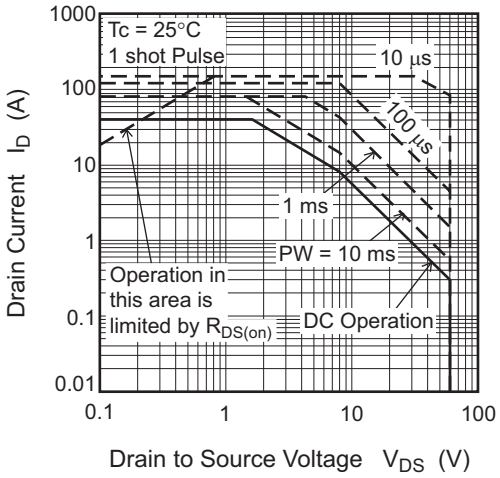

Typical Output Characteristics

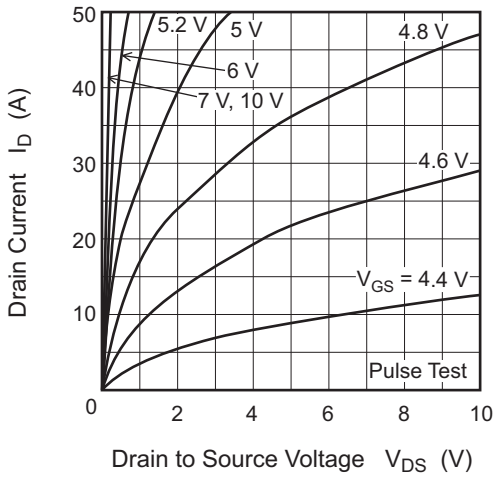

Typical Transfer Characteristics

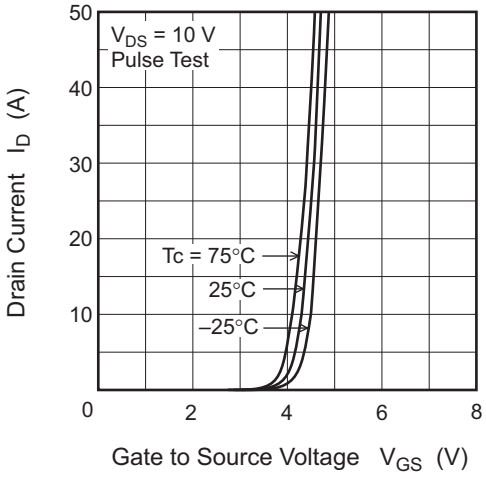

Drain to Source Saturation Voltage vs. Gate to Source Voltage

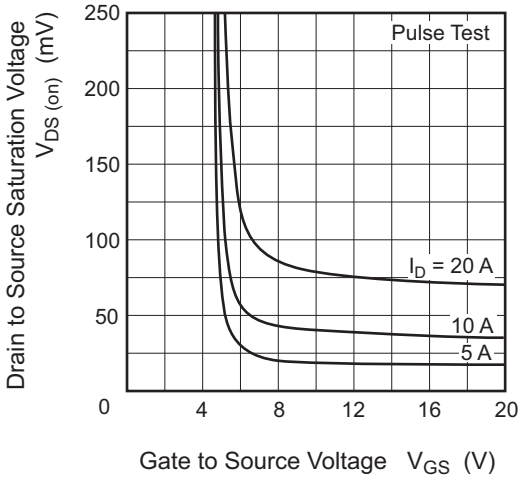

Static Drain to Source on State Resistance vs. Drain Current

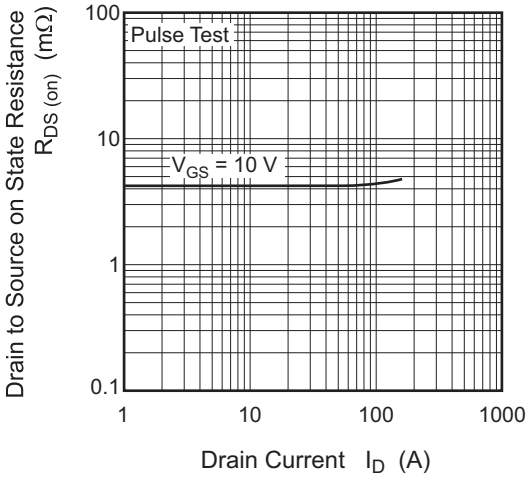

Static Drain to Source on State Resistance vs. Temperature

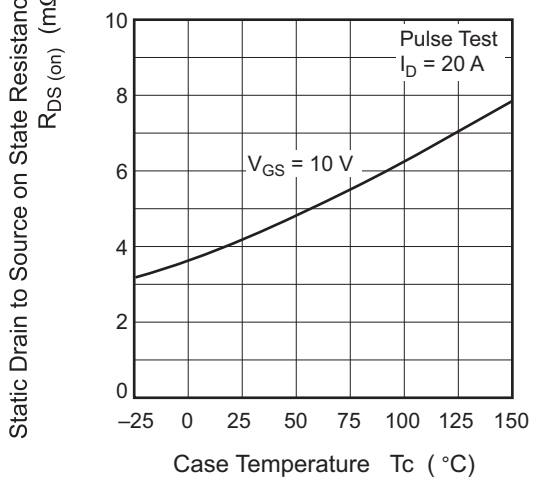

Typical Capacitance vs. Drain to Source Voltage

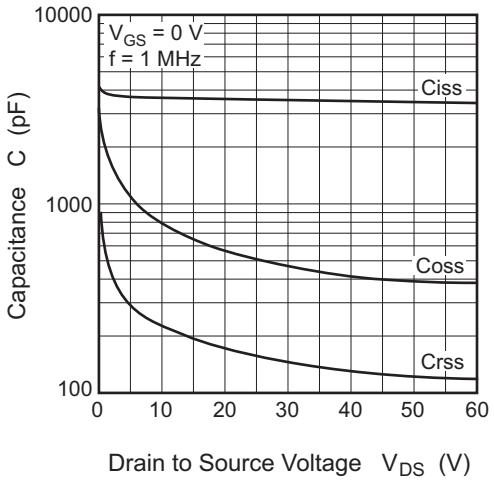

Dynamic Input Characteristics

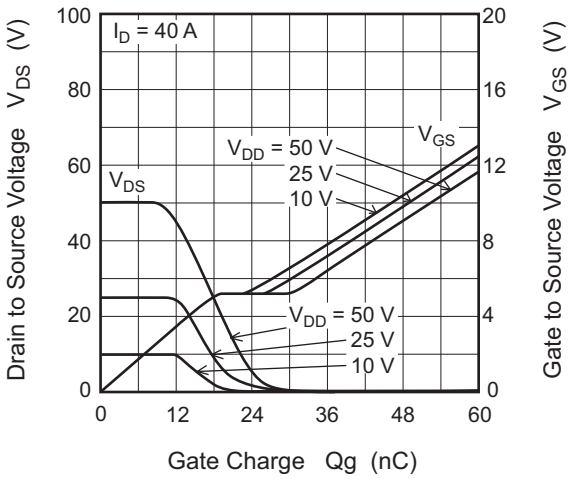

Reverse Drain Current vs. Source to Drain Voltage

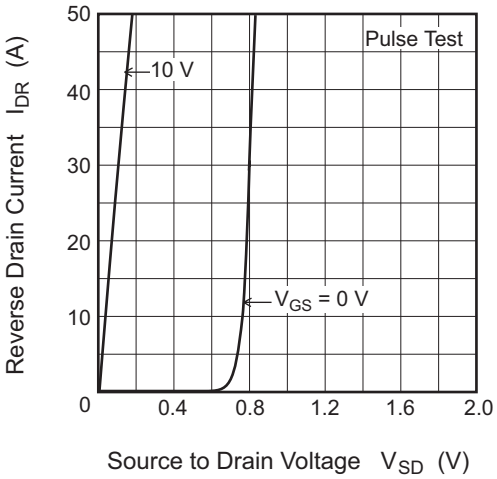

Maximum Avalanche Energy vs. Channel Temperature Derating

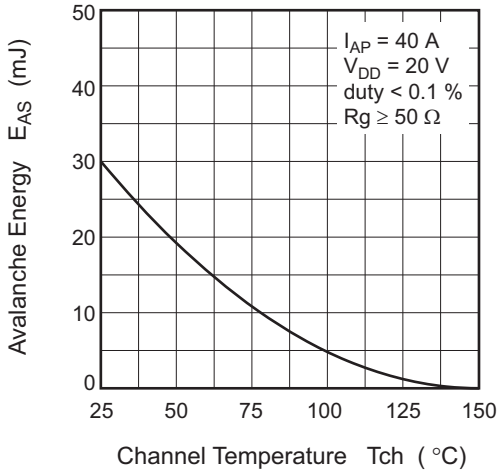

Normalized Transient Thermal Impedance vs. Pulse Width

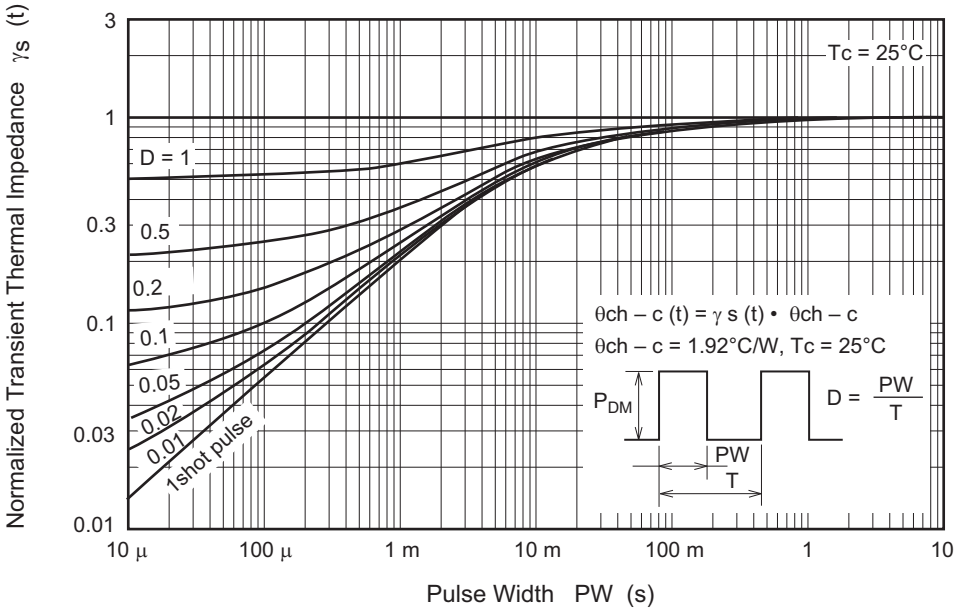

Avalanche Test Circuit

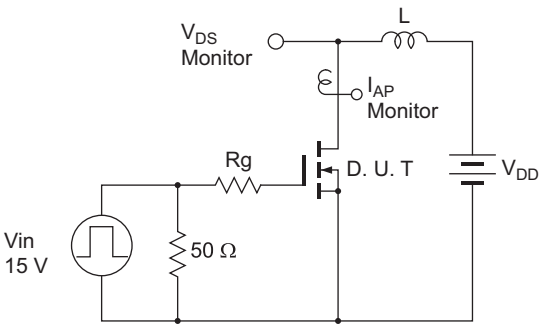

Avalanche Waveform

$$E_{AS} = \frac{1}{2} \cdot L \cdot I_{AP}^2 \cdot \frac{V_{DSS}}{V_{DSS} - V_{DD}}$$

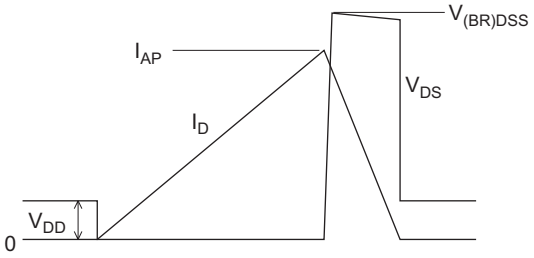

Switching Time Test Circuit

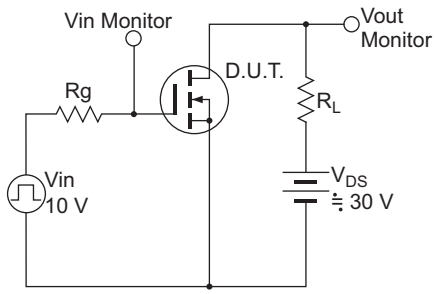

Switching Time Waveform

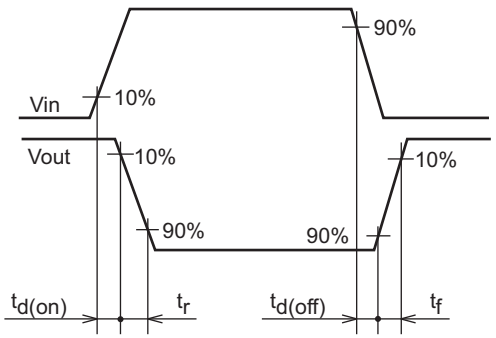

Package Dimensions

Package Name	JEITA Package Code	RENESAS Code	Previous Code	MASS[Typ.]
WPAK(3F)	—	PWSN0008DE-A	WPAK(3F)V	0.075g

Unit: mm

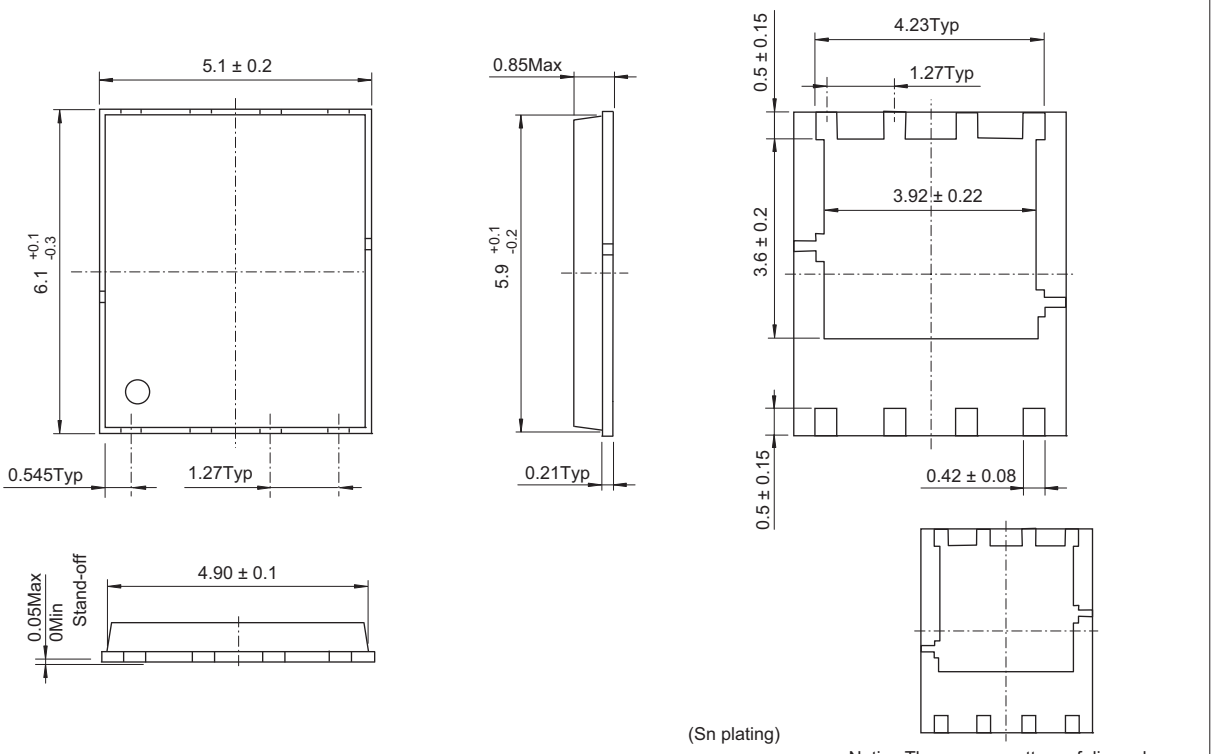

Notice:The reverse pattern of die-pad support lead described above exists.

Ordering Information

Orderable Part No.	Quantity	Shipping Container
RJK0660DPA-00-J5A	3000 pcs	Taping

Note: The symbol of 2nd "-" is occasionally presented as "#".

Notice

1. Descriptions of circuits, software and other related information in this document are provided only to illustrate the operation of semiconductor products and application examples. You are fully responsible for the incorporation of these circuits, software, and information in the design of your equipment. Renesas Electronics assumes no responsibility for any losses incurred by you or third parties arising from the use of these circuits, software, or information.
2. Renesas Electronics has used reasonable care in preparing the information included in this document, but Renesas Electronics does not warrant that such information is error free. Renesas Electronics assumes no liability whatsoever for any damages incurred by you resulting from errors in or omissions from the information included herein.
3. Renesas Electronics does not assume any liability for infringement of patents, copyrights, or other intellectual property rights of third parties by or arising from the use of Renesas Electronics products or technical information described in this document. No license, express, implied or otherwise, is granted hereby under any patents, copyrights or other intellectual property rights of Renesas Electronics or others.
4. You should not alter, modify, copy, or otherwise misappropriate any Renesas Electronics product, whether in whole or in part. Renesas Electronics assumes no responsibility for any losses incurred by you or third parties arising from such alteration, modification, copy or otherwise misappropriation of Renesas Electronics product.
5. Renesas Electronics products are classified according to the following two quality grades: "Standard" and "High Quality". The recommended applications for each Renesas Electronics product depends on the product's quality grade, as indicated below.
   "Standard": Computers; office equipment; communications equipment; test and measurement equipment; audio and visual equipment; home electronic appliances; machine tools; personal electronic equipment; and industrial robots etc.
   "High Quality": Transportation equipment (automobiles, trains, ships, etc.); traffic control systems; anti-disaster systems; anti-crime systems; and safety equipment etc.
   Renesas Electronics products are neither intended nor authorized for use in products or systems that may pose a direct threat to human life or bodily injury (artificial life support devices or systems, surgical implantations etc.), or may cause serious property damages (nuclear reactor control systems, military equipment etc.). You must check the quality grade of each Renesas Electronics product before using it in a particular application. You may not use any Renesas Electronics product for any application for which it is not intended. Renesas Electronics shall not be in any way liable for any damages or losses incurred by you or third parties arising from the use of any Renesas Electronics product for which the product is not intended by Renesas Electronics.
6. You should use the Renesas Electronics products described in this document within the range specified by Renesas Electronics, especially with respect to the maximum rating, operating supply voltage range, movement power voltage range, heat radiation characteristics, installation and other product characteristics. Renesas Electronics shall have no liability for malfunctions or damages arising out of the use of Renesas Electronics products beyond such specified ranges.
7. Although Renesas Electronics endeavors to improve the quality and reliability of its products, semiconductor products have specific characteristics such as the occurrence of failure at a certain rate and malfunctions under certain use conditions. Further, Renesas Electronics products are not subject to radiation resistance design. Please be sure to implement safety measures to guard them against the possibility of physical injury, and injury or damage caused by fire in the event of the failure of a Renesas Electronics product, such as safety design for hardware and software including but not limited to redundancy, fire control and malfunction prevention, appropriate treatment for aging degradation or any other appropriate measures. Because the evaluation of microcomputer software alone is very difficult, please evaluate the safety of the final products or systems manufactured by you.
8. Please contact a Renesas Electronics sales office for details as to environmental matters such as the environmental compatibility of each Renesas Electronics product. Please use Renesas Electronics products in compliance with all applicable laws and regulations that regulate the inclusion or use of controlled substances, including without limitation, the EU RoHS Directive. Renesas Electronics assumes no liability for damages or losses occurring as a result of your noncompliance with applicable laws and regulations.
9. Renesas Electronics products and technology may not be used for or incorporated into any products or systems whose manufacture, use, or sale is prohibited under any applicable domestic or foreign laws or regulations. You should not use Renesas Electronics products or technology described in this document for any purpose relating to military applications or use by the military, including but not limited to the development of weapons of mass destruction. When exporting the Renesas Electronics products or technology described in this document, you should comply with the applicable export control laws and regulations and follow the procedures required by such laws and regulations.
10. It is the responsibility of the buyer or distributor of Renesas Electronics products, who distributes, disposes of, or otherwise places the product with a third party, to notify such third party in advance of the contents and conditions set forth in this document, Renesas Electronics assumes no responsibility for any losses incurred by you or third parties as a result of unauthorized use of Renesas Electronics products.
11. This document may not be reproduced or duplicated in any form, in whole or in part, without prior written consent of Renesas Electronics.
12. Please contact a Renesas Electronics sales office if you have any questions regarding the information contained in this document or Renesas Electronics products, or if you have any other inquiries.

(Note 1) "Renesas Electronics" as used in this document means Renesas Electronics Corporation and also includes its majority-owned subsidiaries.

(Note 2) "Renesas Electronics product(s)" means any product developed or manufactured by or for Renesas Electronics.

RENESAS

SALES OFFICES Renesas Electronics Corporation http://www.renesas.com

Refer to "http://www.renesas.com/" for the latest and detailed information.

Renesas Electronics America Inc.
2880 Scott Boulevard Santa Clara, CA 95050-2554, U.S.A.
Tel: +1-408-588-6000, Fax: +1-408-588-6130

Renesas Electronics Canada Limited
1101 Nicholson Road, Newmarket, Ontario L3Y 9C3, Canada
Tel: +1-905-898-5441, Fax: +1-905-898-3220

Renesas Electronics Europe Limited
Dukes Meadow, Millboard Road, Bourne End, Buckinghamshire, SL8 5FH, U.K
Tel: +44-1628-651-700, Fax: +44-1628-651-804

Renesas Electronics Europe GmbH
Arcadiastrasse 10, 40472 Düsseldorf, Germany
Tel: +49-211-65030, Fax: +49-211-6503-1327

Renesas Electronics (China) Co., Ltd.
7th Floor, Quantum Plaza, No.27 ZhiChunLu Haidian District, Beijing 100083, P.R.China
Tel: +86-10-8235-1155, Fax: +86-10-8235-7679

Renesas Electronics (Shanghai) Co., Ltd.
Unit 204, 205, AZIA Center, No.1233 Lujiazui Ring Rd., Pudong District, Shanghai 200120, China
Tel: +86-21-5877-1818, Fax: +86-21-6887-7858 / -7898

Renesas Electronics Hong Kong Limited
Unit 1601-1613, 16/F., Tower 2, Grand Century Place, 193 Prince Edward Road West, Mongkok, Kowloon, Hong Kong
Tel: +852-2886-9318, Fax: +852 2886-9022/9044

Renesas Electronics Taiwan Co., Ltd.
13F, No. 363, Fu Shing North Road, Taipei, Taiwan
Tel: +886-2-8175-9600, Fax: +886 2-8175-9670

Renesas Electronics Singapore Pte. Ltd.
80 Bendemeer Road, Unit #06-02 Hyflux Innovation Centre Singapore 339949
Tel: +65-6213-0200, Fax: +65-6213-0300

Renesas Electronics Malaysia Sdn.Bhd.
Unit 906, Block B, Menara Amcorp, Amcorp Trade Centre, No. 18, Jln Persiaran Barat, 46050 Petaling Jaya, Selangor Darul Ehsan, Malaysia
Tel: +60-3-7955-9390, Fax: +60-3-7955-9510

Renesas Electronics Korea Co., Ltd.
11F., Samik Lavied' or Bldg., 720-2 Yeoksam-Dong, Kangnam-Ku, Seoul 135-080, Korea
Tel: +82-2-558-3737, Fax: +82-2-558-5141

© 2013 Renesas Electronics Corporation. All rights reserved.

Colophon 2.2

ENTEGRECİ

Bu belge www.entegreci.com üzerinden sunulmaktadır.

Elektronik komponent tedarikinde Entegreci

Entegreci, Eskişehir merkezli, Türkiye geneline satış yapan bir elektronik komponent mağazasıdır. Entegreler (IC), mikrodenetleyiciler, transistörler, diyotlar, pasif elemanlar, konnektörler, modüller ve geliştirme kartları tek adetten seri üretim adetlerine kadar satılır. Ürün sayfalarında güncel stok durumunu, fiyatı ve datasheet bağlantısını bulabilirsiniz.

Parça koduyla arama

Üretici parça numarasını yazın; stok ve fiyatı hemen görün.

www.entegreci.com

Ürün kategorileri

Entegreden kapasitöre tüm elektronik komponent kategorileri.

Kategorilere göz atın

Üreticiler

Aradığınız üreticinin ürünlerini tek sayfada inceleyin.

Üreticileri görün

Toplu alım ve teklif

Listede olmayan ya da yüksek adetli parçalar için teklif isteyin.

Teklif isteyin

www.entegreci.com | **destek@entegreci.com** | **0850 305 90 34**

Entegreci is an online electronic components store based in Türkiye. Search by manufacturer part number to see stock, prices and datasheets for integrated circuits, microcontrollers, transistors, passive components and connectors, or request a quote for parts that are not listed.

Bu sayfa Entegreci tarafından eklenmiştir. Belgenin önceki sayfaları asıl yayıncısına aittir ve içeriği değiştirilmemiştir; en güncel sürüm için belgenin yayıncısına başvurun.