

Is Now Part of



ON Semiconductor®

To learn more about ON Semiconductor, please visit our website at
www.onsemi.com

Please note: As part of the Fairchild Semiconductor integration, some of the Fairchild orderable part numbers will need to change in order to meet ON Semiconductor's system requirements. Since the ON Semiconductor product management systems do not have the ability to manage part nomenclature that utilizes an underscore (_), the underscore (_) in the Fairchild part numbers will be changed to a dash (-). This document may contain device numbers with an underscore (_). Please check the ON Semiconductor website to verify the updated device numbers. The most current and up-to-date ordering information can be found at www.onsemi.com. Please email any questions regarding the system integration to Fairchild_questions@onsemi.com.

ON Semiconductor and the ON Semiconductor logo are trademarks of Semiconductor Components Industries, LLC dba ON Semiconductor or its subsidiaries in the United States and/or other countries. ON Semiconductor owns the rights to a number of patents, trademarks, copyrights, trade secrets, and other intellectual property. A listing of ON Semiconductor's product/patent coverage may be accessed at www.onsemi.com/site/pdf/Patent-Marking.pdf. ON Semiconductor reserves the right to make changes without further notice to any products herein. ON Semiconductor makes no warranty, representation or guarantee regarding the suitability of its products for any particular purpose, nor does ON Semiconductor assume any liability arising out of the application or use of any product or circuit, and specifically disclaims any and all liability, including without limitation special, consequential or incidental damages. Buyer is responsible for its products and applications using ON Semiconductor products, including compliance with all laws, regulations and safety requirements or standards, regardless of any support or applications information provided by ON Semiconductor. "Typical" parameters which may be provided in ON Semiconductor data sheets and/or specifications can and do vary in different applications and actual performance may vary over time. All operating parameters, including "Typicals" must be validated for each customer application by customer's technical experts. ON Semiconductor does not convey any license under its patent rights nor the rights of others. ON Semiconductor products are not designed, intended, or authorized for use as a critical component in life support systems or any FDA Class 3 medical devices or medical devices with a same or similar classification in a foreign jurisdiction or any devices intended for implantation in the human body. Should Buyer purchase or use ON Semiconductor products for any such unintended or unauthorized application, Buyer shall indemnify and hold ON Semiconductor and its officers, employees, subsidiaries, affiliates, and distributors harmless against all claims, costs, damages, and expenses, and reasonable attorney fees arising out of, directly or indirectly, any claim of personal injury or death associated with such unintended or unauthorized use, even if such claim alleges that ON Semiconductor was negligent regarding the design or manufacture of the part. ON Semiconductor is an Equal Opportunity/Affirmative Action Employer. This literature is subject to all applicable copyright laws and is not for resale in any manner.

Data Sheet **October 2013**

N-Channel UltraFET Power MOSFET
60 V, 17 A, 71 mΩ

Packaging

JEDEC TO-252AA

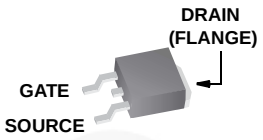

Symbol

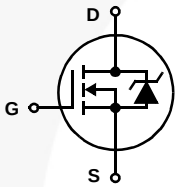

Features

- Ultra Low On-Resistance
  - $r_{DS(ON)}$ = 0.063Ω, V_{GS} = 10V
  - $r_{DS(ON)}$ = 0.071Ω, V_{GS} = 5V
- Simulation Models
  - Temperature Compensated PSPICE® and SABER© Electrical Models
  - Spice and SABER© Thermal Impedance Models
  - www.fairchildsemi.com
- Peak Current vs Pulse Width Curve
- UIS Rating Curve
- Switching Time vs R_{GS} Curves

Ordering Information

PART NUMBER	PACKAGE	BRAND
RFD12N06RLESM9A	TO-252AA	12N6LE

Absolute Maximum Ratings

T_C = 25°C, Unless Otherwise Specified

		RFD12N06RLESM9A	UNITS
Drain to Source Voltage (Note 1)	V_{DSS}	60	V
Drain to Gate Voltage (R_{GS} = 20kΩ) (Note 1)	V_{DGR}	60	V
Gate to Source Voltage	V_{GS}	±16	V
Drain Current			
Continuous (T_C= 25°C, V_{GS} = 5V)	I_D	17	A
Continuous (T_C= 25°C, V_{GS} = 10V) (Figure 2)	I_D	18	A
Continuous (T_C= 135°C, V_{GS} = 5V)	I_D	8	A
Continuous (T_C= 135°C, V_{GS} = 4.5V) (Figure 2)	I_D	8	A
Pulsed Drain Current	I_{DM}	Figure 4	
Pulsed Avalanche Rating	UIS	Figures 6, 17, 18	
Power Dissipation	P_D	49	W
Derate Above 25°C		0.327	W/°C
Operating and Storage Temperature	T_J, T_{STG}	-55 to 175	°C
Maximum Temperature for Soldering			
Leads at 0.063in (1.6mm) from Case for 10s	T_L	300	°C
Package Body for 10s, See Techbrief TB334	T_{pkg}	260	°C

NOTE:

1. T_J = 25°C to 150°C.

CAUTION: *Stresses above those listed in "Absolute Maximum Ratings" may cause permanent damage to the device. This is a stress only rating and operation of the device at these or any other conditions above those indicated in the operational sections of this specification is not implied.*

©2002 Fairchild Semiconductor Corporation

Electrical Specifications $T_C = 25^oC$, Unless Otherwise Specified

PARAMETER	SYMBOL	TEST CONDITIONS		MIN	TYP	MAX	UNITS
OFF STATE SPECIFICATIONS							
Drain to Source Breakdown Voltage	BV_{DSS}	I_D = 250μA, V_{GS} = 0V (Figure 12)		60	-	-	V
		I_D = 250μA, V_{GS} = 0V , T_C = -40°C (Figure 12)		55	-	-	V
Zero Gate Voltage Drain Current	I_{DSS}	V_{DS} = 55V, V_{GS} = 0V		-	-	1	μA
		V_{DS} = 50V, V_{GS} = 0V, T_C = 150°C		-	-	250	μA
Gate to Source Leakage Current	I_{GSS}	V_{GS} = ±16V		-	-	±100	nA
ON STATE SPECIFICATIONS							
Gate to Source Threshold Voltage	$V_{GS(TH)}$	V_{GS} = V_{DS}, I_D = 250μA (Figure 11)		1	-	3	V
Drain to Source On Resistance	$r_{DS(ON)}$	I_D = 18A, V_{GS} = 10V (Figures 9, 10)		-	0.052	0.063	Ω
		I_D = 8A, V_{GS} = 5V (Figure 9)		-	0.060	0.071	Ω
		I_D = 8A, V_{GS} = 4.5V (Figure 9)		-	0.064	0.075	Ω
THERMAL SPECIFICATIONS							
Thermal Resistance Junction to Case	$R_{\theta JC}$	TO-252AA		-	-	3.06	^{o}C/W
Thermal Resistance Junction to Ambient	$R_{\theta JA}$			-	-	100	^{o}C/W
SWITCHING SPECIFICATIONS (V_{GS} = 4.5V)							
Turn-On Time	t_{ON}	V_{DD} = 30V, I_D = 8A V_{GS} = 4.5V, R_{GS} = 22Ω (Figures 15, 21, 22)		-	-	153	ns
Turn-On Delay Time	$t_{d(ON)}$			-	13	-	ns
Rise Time	t_r			-	89	-	ns
Turn-Off Delay Time	$t_{d(OFF)}$			-	22	-	ns
Fall Time	t_f			-	37	-	ns
Turn-Off Time	t_{OFF}			-	-	89	ns
SWITCHING SPECIFICATIONS (V_{GS} = 10V)							
Turn-On Time	t_{ON}	V_{DD} = 30V, I_D = 18A V_{GS} = 10V, R_{GS} = 24Ω (Figures 16, 21, 22)		-	-	59	ns
Turn-On Delay Time	$t_{d(ON)}$			-	5.3	-	ns
Rise Time	t_r			-	34	-	ns
Turn-Off Delay Time	$t_{d(OFF)}$			-	41	-	ns
Fall Time	t_f			-	50	-	ns
Turn-Off Time	t_{OFF}			-	-	136	ns
GATE CHARGE SPECIFICATIONS							
Total Gate Charge	$Q_{g(TOT)}$	V_{GS} = 0V to 10V	V_{DD} = 30V, I_D = 8A, $I_{g(REF)}$ = 1.0mA (Figures 14, 19, 20)	-	12	15	nC
Gate Charge at 5V	$Q_{g(5)}$	V_{GS} = 0V to 5V		-	6.8	8.2	nC
Threshold Gate Charge	$Q_{g(TH)}$	V_{GS} = 0V to 1V		-	0.54	0.65	nC
Gate to Source Gate Charge	Q_{gs}			-	1.7	-	nC
Gate to Drain “Miller” Charge	Q_{gd}			-	3	-	nC
CAPACITANCE SPECIFICATIONS							
Input Capacitance	C_{ISS}	V_{DS} = 25V, V_{GS} = 0V, f = 1MHz (Figure 13)		-	485	-	pF
Output Capacitance	C_{OSS}			-	130	-	pF
Reverse Transfer Capacitance	C_{RSS}			-	28	-	pF

Source to Drain Diode Specifications

PARAMETER	SYMBOL	TEST CONDITIONS	MIN	TYP	MAX	UNITS
Source to Drain Diode Voltage	V_{SD}	I_{SD} = 8A	-	-	1.25	V
		I_{SD} = 4A	-	-	1.0	V
Reverse Recovery Time	t_{rr}	I_{SD} = 8A, dI_{SD}/dt = 100A/μs	-	-	70	ns
Reverse Recovered Charge	Q_{RR}	I_{SD} = 8A, dI_{SD}/dt = 100A/μs	-	-	165	nC

©2002 Fairchild Semiconductor Corporation

Typical Performance Curves

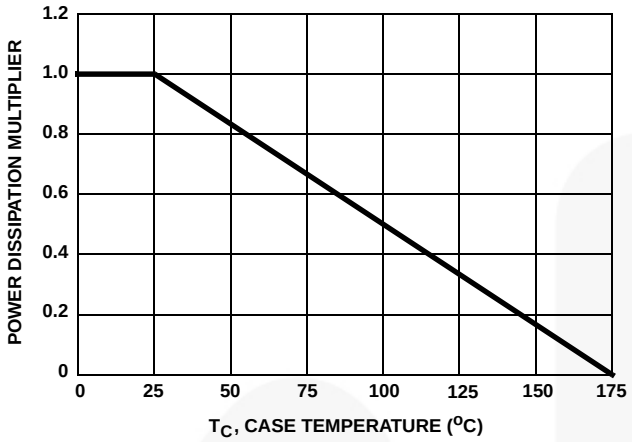

FIGURE 1. NORMALIZED POWER DISSIPATION vs CASE TEMPERATURE

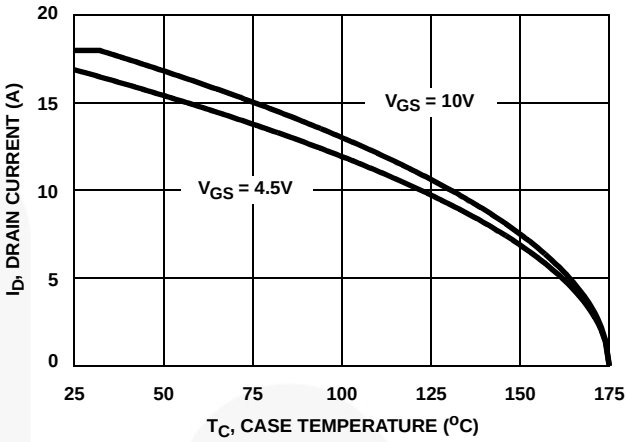

FIGURE 2. MAXIMUM CONTINUOUS DRAIN CURRENT vs CASE TEMPERATURE

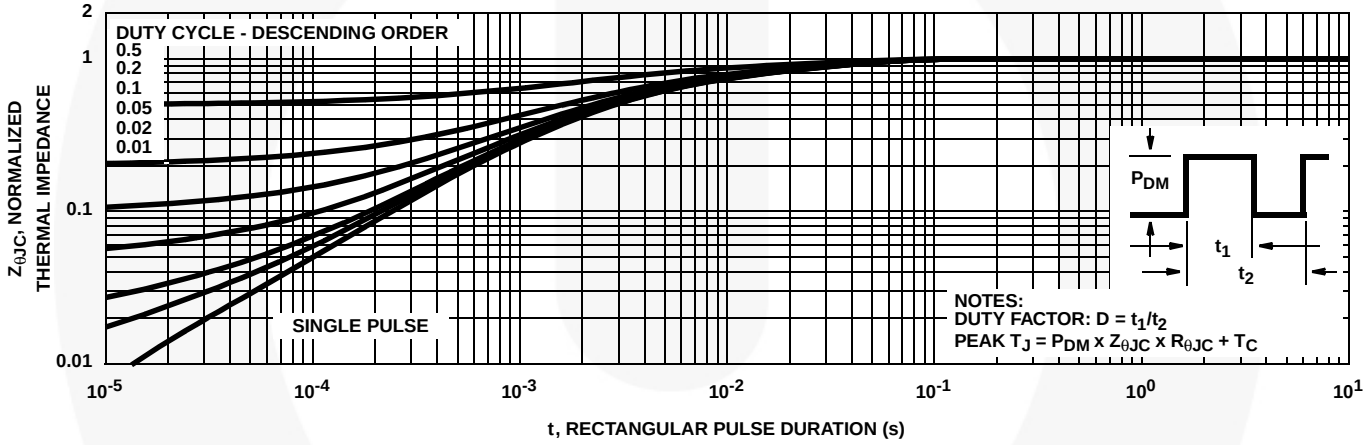

FIGURE 3. NORMALIZED MAXIMUM TRANSIENT THERMAL IMPEDANCE

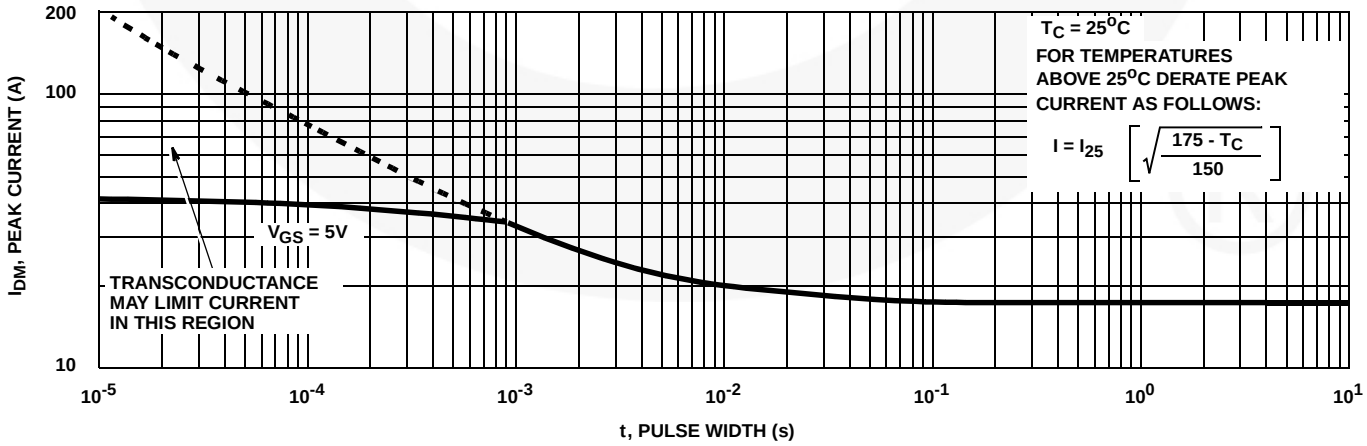

FIGURE 4. PEAK CURRENT CAPABILITY

©2002 Fairchild Semiconductor Corporation

Typical Performance Curves (Continued)

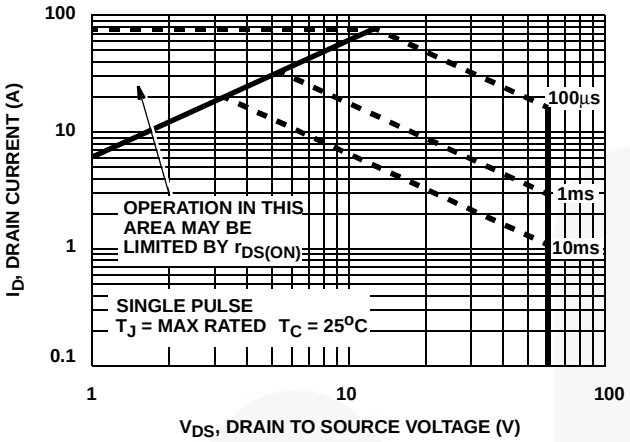

FIGURE 5. FORWARD BIAS SAFE OPERATING AREA

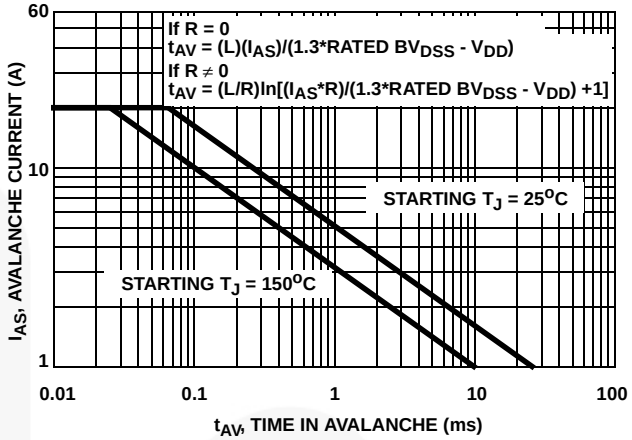

NOTE: Refer to Fairchild Application Notes AN9321 and AN9322.

FIGURE 6. UNCLAMPED INDUCTIVE SWITCHING CAPABILITY

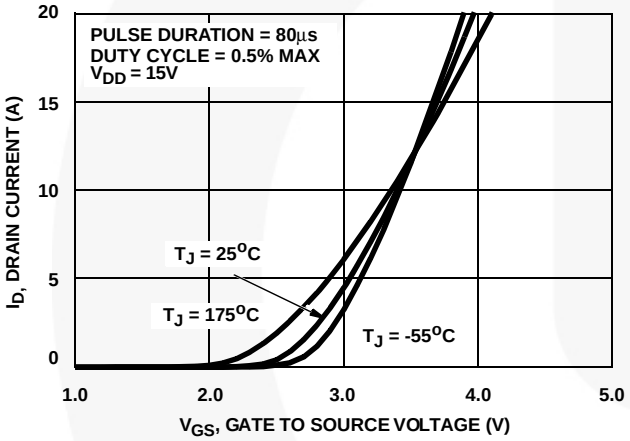

FIGURE 7. TRANSFER CHARACTERISTICS

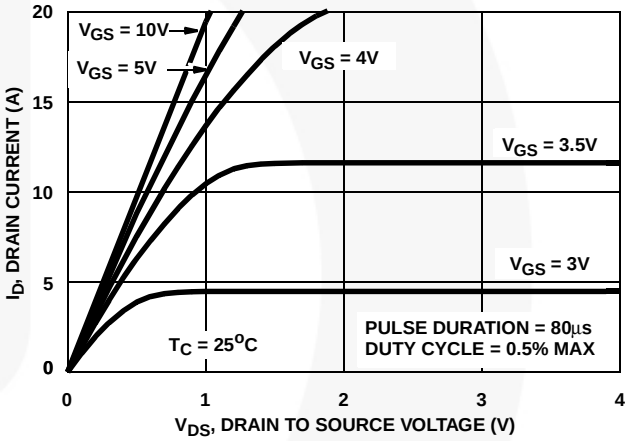

FIGURE 8. SATURATION CHARACTERISTICS

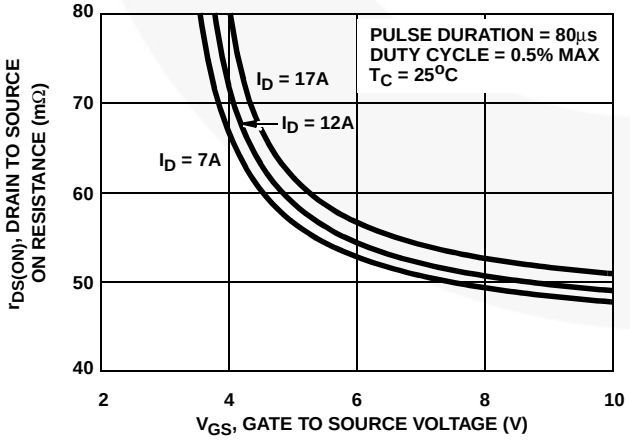

FIGURE 9. DRAIN TO SOURCE ON RESISTANCE vs GATE VOLTAGE AND DRAIN CURRENT

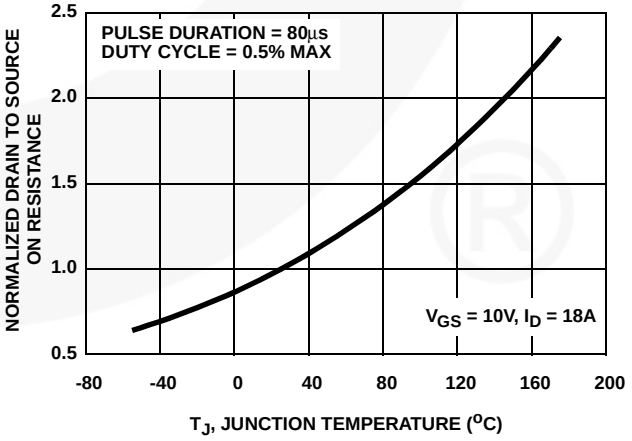

FIGURE 10. NORMALIZED DRAIN TO SOURCE ON RESISTANCE vs JUNCTION TEMPERATURE

©2002 Fairchild Semiconductor Corporation

Typical Performance Curves (Continued)

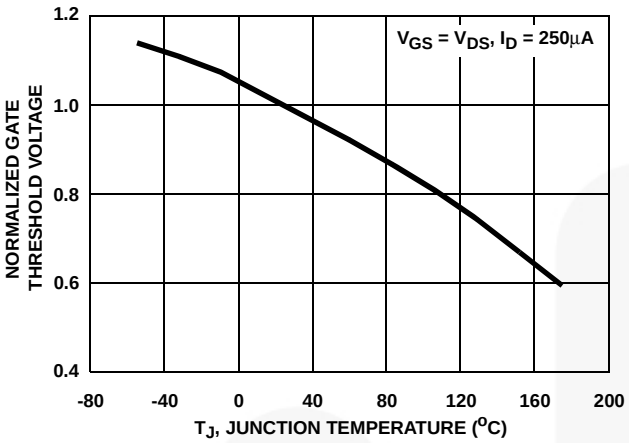

FIGURE 11. NORMALIZED GATE THRESHOLD VOLTAGE vs JUNCTION TEMPERATURE

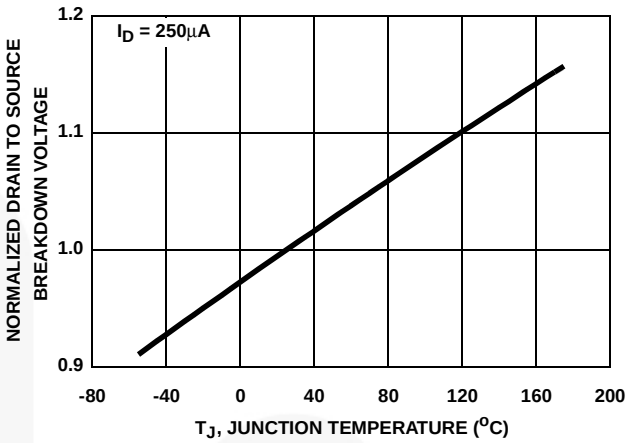

FIGURE 12. NORMALIZED DRAIN TO SOURCE BREAKDOWN VOLTAGE vs JUNCTION TEMPERATURE

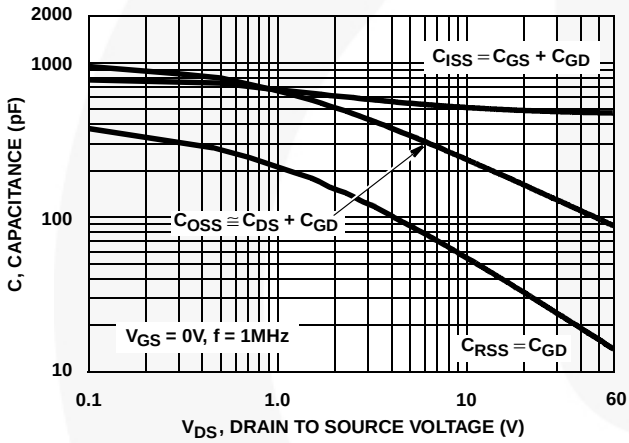

FIGURE 13. CAPACITANCE vs DRAIN TO SOURCE VOLTAGE

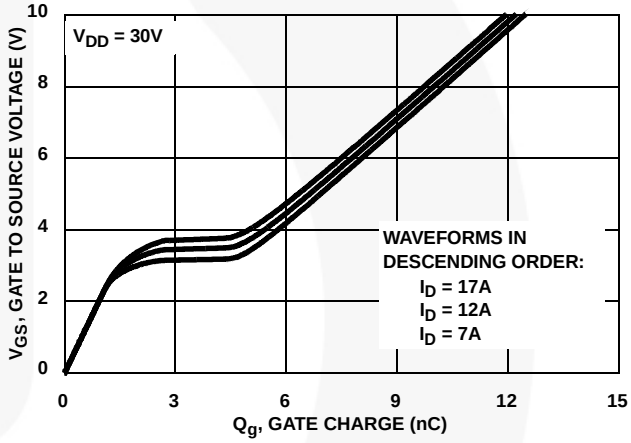

NOTE: Refer to Fairchild Application Notes AN7254 and AN7260.

FIGURE 14. GATE CHARGE WAVEFORMS FOR CONSTANT GATE CURRENT

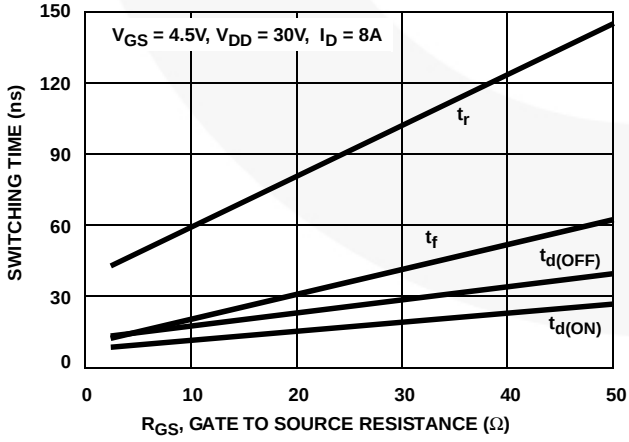

FIGURE 15. SWITCHING TIME vs GATE RESISTANCE

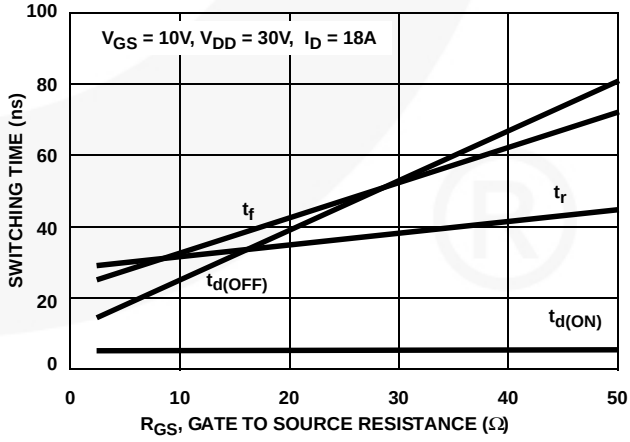

FIGURE 16. SWITCHING TIME vs GATE RESISTANCE

©2002 Fairchild Semiconductor Corporation

Test Circuits and Waveforms

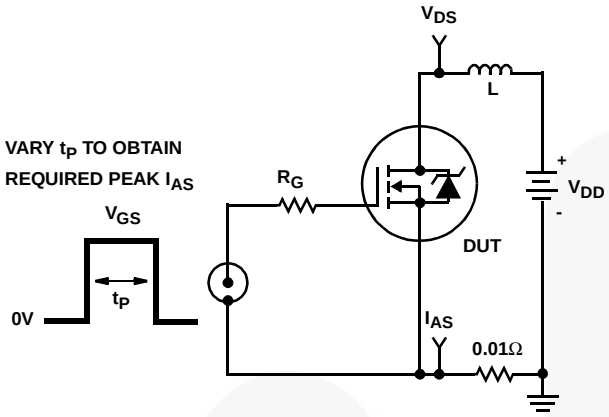

FIGURE 17. UNCLAMPED ENERGY TEST CIRCUIT

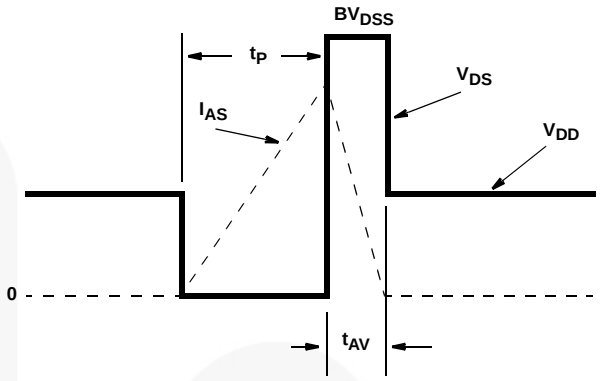

FIGURE 18. UNCLAMPED ENERGY WAVEFORMS

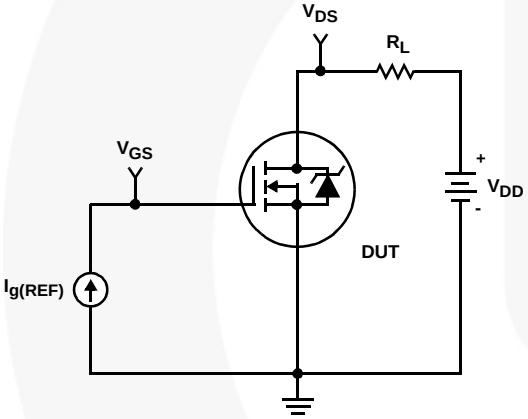

FIGURE 19. GATE CHARGE TEST CIRCUIT

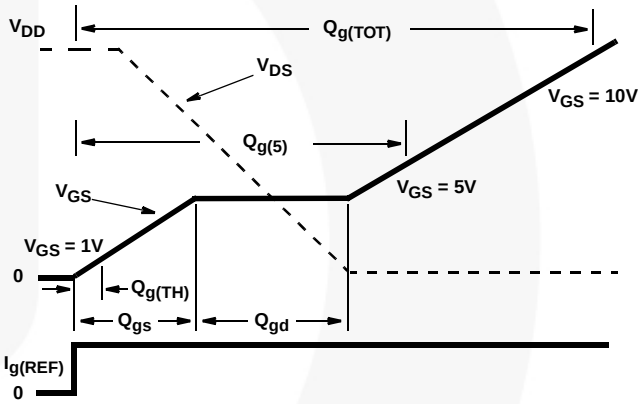

FIGURE 20. GATE CHARGE WAVEFORMS

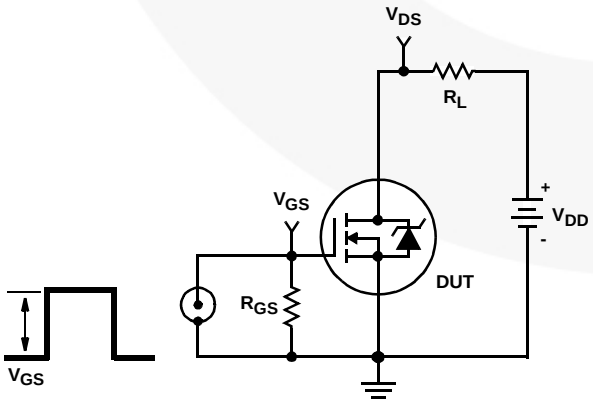

FIGURE 21. SWITCHING TIME TEST CIRCUIT

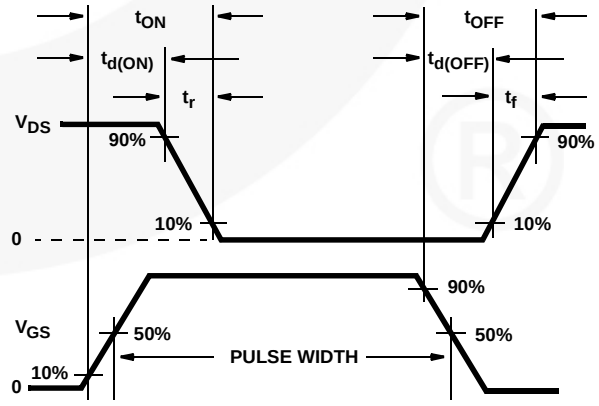

FIGURE 22. SWITCHING TIME WAVEFORM

©2002 Fairchild Semiconductor Corporation

PSPICE Electrical Model

.SUBCKT HUF76409D 2 1 3 ; rev 23 August 1999

CA 12 8 6.30e-10
CB 15 14 6.30e-10
CIN 6 8 4.60e-10

DBODY 7 5 DBODYMOD
DBREAK 5 11 DBREAKMOD
DPLCAP 10 5 DPLCAPMOD

EBREAK 11 7 17 18 66.55
EDS 14 8 5 8 1
EGS 13 8 6 8 1
ESG 6 10 6 8 1
EVTHRES 6 21 19 8 1
EVTEMP 20 6 18 22 1

IT 8 17 1

LDRAIN 2 5 1.00e-9
LGATE 1 9 3.73e-9
LSOURCE 3 7 3.43e-9

MMED 16 6 8 8 MMEDMOD
MSTRO 16 6 8 8 MSTROMOD
MWEAK 16 21 8 8 MWEAKMOD

RBREAK 17 18 RBREAKMOD 1
RDRAIN 50 16 RDRAINMOD 1.88e-2
RGATE 9 20 3.76
RLDRAIN 2 5 10
RLGATE 1 9 37.3
RLSOURCE 3 7 34.3
RSLC1 5 51 RSLCMOD 1e-6
RSLC2 5 50 1e3
RSOURCE 8 7 RSOURCEMOD 2.40e-2
RVTHRES 22 8 RVTHRESMOD 1
RVTEMP 18 19 RVTEMPMOD 1

S1A 6 12 13 8 S1AMOD
S1B 13 12 13 8 S1BMOD
S2A 6 15 14 13 S2AMOD
S2B 13 15 14 13 S2BMOD

VBAT 22 19 DC 1

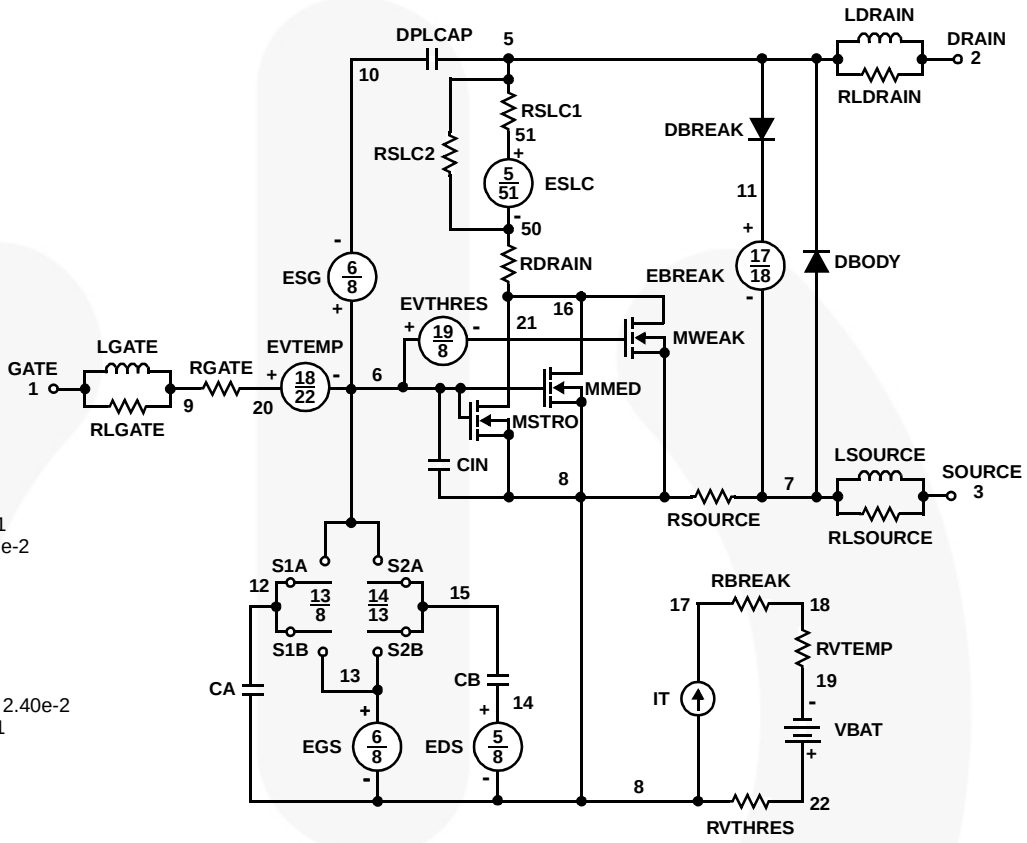

ESLC 51 50 VALUE={(V(5,51)/ABS(V(5,51)))*(PWR(V(5,51)/(1e-6*43),3))}

.MODEL DBODYMOD D (IS = 3.84e-13 RS = 1.56e-2 TRS1 = -1.0e-3 TRS2 = 7.0e-6 CJO = 6.4e-10 TT = 5.10e-8 XTI =4.35 M = 0.52)
.MODEL DBREAKMOD D (RS = 3.70e- 1TRS1 = 9.10e- 4TRS2 = -1e-6)
.MODEL DPLCAPMOD D (CJO = 3.70e-1 0IS = 1e-3 0N = 10 M = 0.79)
.MODEL MMEDMOD NMOS (VTO = 2.08 KP = 3.2 IS = 1e-30 N = 10 TOX = 1 L = 1u W = 1u RG = 3.76)
.MODEL MSTROMOD NMOS (VTO = 2.40 KP = 28 IS = 1e-30 N = 10 TOX = 1 L = 1u W = 1u)
.MODEL MWEAKMOD NMOS (VTO = 1.80 KP = 0.08 IS = 1e-30 N = 10 TOX = 1 L = 1u W = 1u RG = 37.6 RS = 0.1)
.MODEL RBREAKMOD RES (TC1 = 1.13e- 3TC2 = -3.00e-7)
.MODEL RDRAINMOD RES (TC1 = 9.80e-3 TC2 = 2.85e-5)
.MODEL RSLCMOD RES (TC1 = 5.00e-3 TC2 = 5.05e-6)
.MODEL RSOURCEMOD RES (TC1 = 1.5e-3 TC2 = 1e-6)
.MODEL RVTHRESMOD RES (TC1 = -1.48e-3 TC2 = -8.30e-6)
.MODEL RVTEMPMOD RES (TC1 = -1.68e- 3TC2 = 8e-7)

.MODEL S1AMOD VSWITCH (RON = 1e-5 ROFF = 0.1 VON = -5 VOFF= -2.8)
.MODEL S1BMOD VSWITCH (RON = 1e-5 ROFF = 0.1 VON = -2.8 VOFF= -5)
.MODEL S2AMOD VSWITCH (RON = 1e-5 ROFF = 0.1 VON = -0.5 VOFF= 0.5)
.MODEL S2BMOD VSWITCH (RON = 1e-5 ROFF = 0.1 VON = 0.5 VOFF= -0.5)

.ENDS

NOTE: For further discussion of the PSPICE model, consult **A New PSPICE Sub-Circuit for the Power MOSFET Featuring Global Temperature Options**; IEEE Power Electronics Specialist Conference Records, 1991, written by William J. Hepp and C. Frank Wheatley.

©2002 Fairchild Semiconductor Corporation

SABER Electrical Model

REV 23 August 1999

```
template huf76409d n2,n1,n3
electrical n2,n1,n3
{
var i iscl
d..model dbodymod =  (is = 3.84e-13, cjo = 6.40e-10, tt = 5.10e-8, xti = 4.35, m = 0.52)
d..model dbreakmod = ()
d..model dplcapmod =  (cjo = 3.70e-10, is = 1e-30, m = 0.79)
m..model mmedmod = (type=_n, vto = 2.08, kp = 3.2, is = 1e-30, tox = 1)
m..model mstrongmod = (type=_n, vto = 2.40, kp = 28, is = 1e-30, tox = 1)
m..model mweakmod = (type=_n, vto = 1.80, kp = 0.08, is = 1e-30, tox = 1)
sw_vcsp..model s1amod =  (ron = 1e-5, roff = 0.1, von = -5, voff = -2.8)
sw_vcsp..model s1bmod =  (ron =1e-5, roff = 0.1, von = -2.8, voff = -5)
sw_vcsp..model s2amod =  (ron = 1e-5, roff = 0.1, von = -0.5, voff = 0.5)
sw_vcsp..model s2bmod =  (ron = 1e-5, roff = 0.1, von = 0.5, voff = -0.5)

c.ca n12 n8 = 6.30e-10
c.cb n15 n14 = 6.30e-10
c.cin n6 n8 = 4.60e-10

d.dbody n7 n71 = model=dbodymod
d.dbreak n72 n11 = model=dbreakmod
d.dplcap n10 n5 = model=dplcapmod

i.it n8 n17 = 1

l.ldrain n2 n5 = 1.00e-9
l.lgate n1 n9 = 3.73e-9
l.lsource n3 n7 = 3.43e-9

m.mmed n16 n6 n8 n8 = model=mmedmod, l=1u, w=1u
m.mstrong n16 n6 n8 n8 = model=mstrongmod, l=1u, w=1u
m.mweak n16 n21 n8 n8 = model=mweakmod, l=1u, w=1u

res.rbreak n17 n18  = 1, tc1 = 1.13e-3, tc2 = -3.00e-7
res.rdbody n71 n5 = 1.56e-2, tc1 = -1.0e-3, tc2 = 7.00e-6
res.rdbreak n72 n5 = 3.70e-1, tc1 = 9.10e-4, tc2 = -1e-6
res.rdrain n50 n16  = 1.88e-2, tc1 = 9.80e-3, tc2 = 2.85e-5
res.rgate n9 n20 = 3.76
res.rldrain n2 n5 = 10
res.rlgate n1 n9 = 37.3
res.rlsource n3 n7 = 34.3
res.rslc1 n5 n51= 1e-6, tc1 = 5.00e-3, tc2 = 5.05e-6
res.rslc2 n5 n50 = 1e3
res.rsource n8 n7  = 2.40e-2, tc1 = 1.5e-3, tc2 =1e-6
res.rvtemp n18 n19  = 1, tc1 = -1.68e-3, tc2 = 8.00e-7
res.rvthres n22 n8  = 1, tc1 = -1.48e-3, tc2 = -8.30e-6

spe.ebreak n11 n7 n17 n18 = 66.55
spe.eds n14 n8 n5 n8 = 1
spe.egs n13 n8 n6 n8 = 1
spe.esg n6 n10 n6 n8 = 1
spe.evtemp n20 n6 n18 n22 = 1
spe.evthres n6 n21 n19 n8 = 1

sw_vcsp.s1a n6 n12 n13 n8 = model=s1amod
sw_vcsp.s1b n13 n12 n13 n8 = model=s1bmod
sw_vcsp.s2a n6 n15 n14 n13 = model=s2amod
sw_vcsp.s2b n13 n15 n14 n13 = model=s2bmod

v.vbat n22 n19 = dc=1

equations {
i (n51->n50) +=iscl
iscl: v(n51,n50) = ((v(n5,n51)/(1e-9+abs(v(n5,n51))))*((abs(v(n5,n51)*1e6/43))** 3))
}
}
```

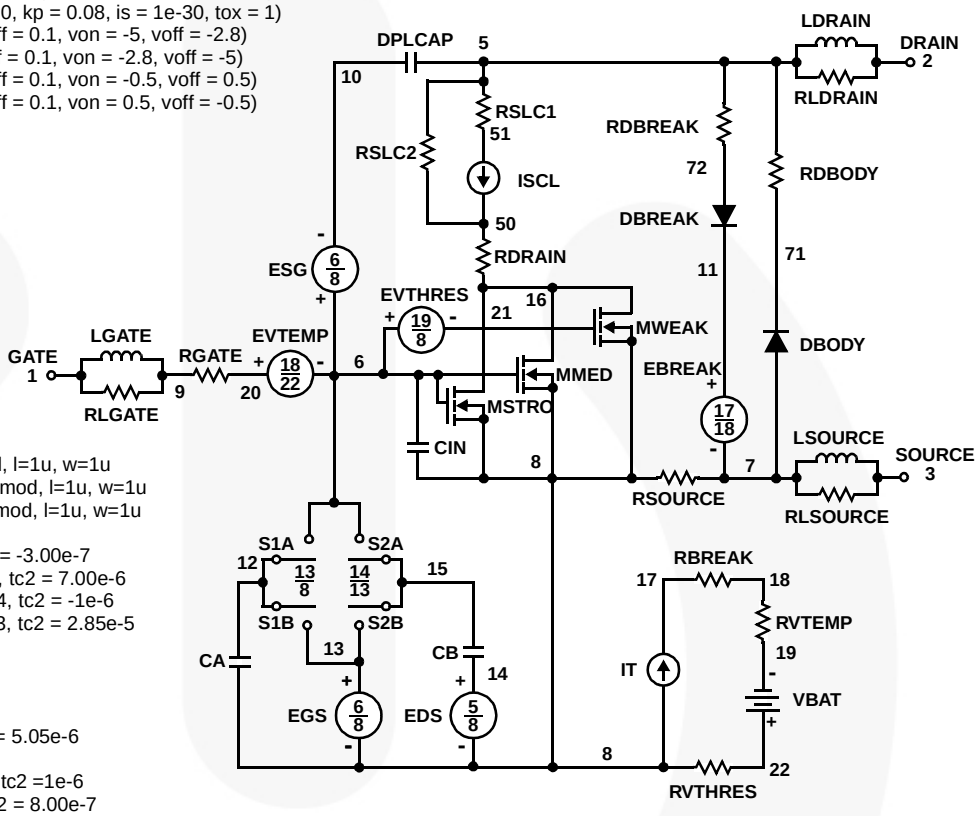

SPICE Thermal Model

REV 10 September 1999

HUF76409T

CTHERM1 th 6 9.50e-4
CTHERM2 6 5 2.40e-3
CTHERM3 5 4 3.90e-3
CTHERM4 4 3 4.10e-3
CTHERM5 3 2 5.60e-3
CTHERM6 2 tl 4.00e-2

RTHERM1 th 6 2.00e-2
RTHERM2 6 5 1.10e-1
RTHERM3 5 4 2.75e-1
RTHERM4 4 3 5.53e-1
RTHERM5 3 2 7.25e-1
RTHERM6 2 tl 7.56e-1

SABER Thermal Model

SABER thermal model HUF76409T

template thermal_model th tl
thermal_c th, tl
{
ctherm.ctherm1 th 6 = 9.50e-4
ctherm.ctherm2 6 5 = 2.40e-3
ctherm.ctherm3 5 4 = 3.90e-3
ctherm.ctherm4 4 3 = 4.10e-3
ctherm.ctherm5 3 2 = 5.60e-3
ctherm.ctherm6 2 tl = 4.00e-2

rtherm.rtherm1 th 6 = 2.00e-2
rtherm.rtherm2 6 5 = 1.10e-1
rtherm.rtherm3 5 4 = 2.75e-1
rtherm.rtherm4 4 3 = 5.53e-1
rtherm.rtherm5 3 2 = 7.25e-1
rtherm.rtherm6 2 tl = 7.56e-1
}

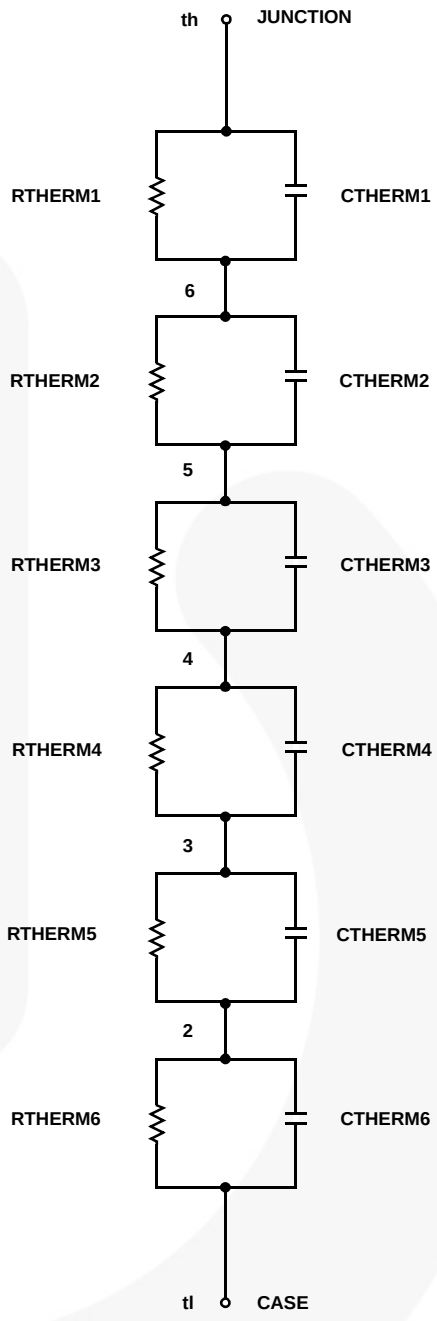

FAIRCHILD SEMICONDUCTOR®

TRADEMARKS

The following includes registered and unregistered trademarks and service marks, owned by Fairchild Semiconductor and/or its global subsidiaries, and is not intended to be an exhaustive list of all such trademarks.

AccuPower™
AX-CAP®*
BitSiC™
Build it Now™
CorePLUS™
CorePOWER™
CROSSVOLT™
CTL™
Current Transfer Logic™
DEUXPEED®
Dual Cool™
EcoSPARK®
EfficentMax™
ESBC™
Fairchild®
Fairchild Semiconductor®
FACT Quiet Series™
FACT®
FAST®
FastvCore™
FETBench™
FPS™
F-PFS™
FRFET®
Global Power Resource℠
GreenBridge™
Green FPS™
Green FPS™ e-Series™
G*max*™
GTO™
IntelliMAX™
ISOPLANAR™
Marking Small Speakers Sound Louder and Better™
MegaBuck™
MICROCOUPLER™
MicroFET™
MicroPak™
MicroPak2™
MillerDrive™
MotionMax™
mWSaver®
OptoHiT™
OPTOLOGIC®
OPTOPLANAR®
PowerTrench®
PowerXS™
Programmable Active Droop™
QFET®
QS™
Quiet Series™
RapidConfigure™
™
Saving our world, 1mW/W/kW at a time™
SignalWise™
SmartMax™
SMART START™
Solutions for Your Success™
SPM®
STEALTH™
SuperFET®
SuperSOT™-3
SuperSOT™-6
SuperSOT™-8
SupreMOS®
SyncFET™
Sync-Lock™
SYSTEM GENERAL ®*
TinyBoost®
TinyBuck®
TinyCalc™
TinyLogic®
TINYOPTO™
TinyPower™
TinyPWM™
TinyWire™
TranSiC™
TriFault Detect™
TRUECURRENT®*
μSerDes™
SerDes™
UHC®
Ultra FRFET™
UniFET™
VCX™
VisualMax™
VoltagePlus™
XS™

*Trademarks of System General Corporation, used under license by Fairchild Semiconductor.

DISCLAIMER

FAIRCHILD SEMICONDUCTOR RESERVES THE RIGHT TO MAKE CHANGES WITHOUT FURTHER NOTICE TO ANY PRODUCTS HEREIN TO IMPROVE RELIABILITY, FUNCTION, OR DESIGN. FAIRCHILD DOES NOT ASSUME ANY LIABILITY ARISING OUT OF THE APPLICATION OR USE OF ANY PRODUCT OR CIRCUIT DESCRIBED HEREIN; NEITHER DOES IT CONVEY ANY LICENSE UNDER ITS PATENT RIGHTS, NOR THE RIGHTS OF OTHERS. THESE SPECIFICATIONS DO NOT EXPAND THE TERMS OF FAIRCHILD'S WORLDWIDE TERMS AND CONDITIONS, SPECIFICALLY THE WARRANTY THEREIN, WHICH COVERS THESE PRODUCTS.

LIFE SUPPORT POLICY

FAIRCHILD'S PRODUCTS ARE NOT AUTHORIZED FOR USE AS CRITICAL COMPONENTS IN LIFE SUPPORT DEVICES OR SYSTEMS WITHOUT THE EXPRESS WRITTEN APPROVAL OF FAIRCHILD SEMICONDUCTOR CORPORATION.

As used here in:

1. Life support devices or systems are devices or systems which, (a) are intended for surgical implant into the body or (b) support or sustain life, and (c) whose failure to perform when properly used in accordance with instructions for use provided in the labeling, can be reasonably expected to result in a significant injury of the user.
2. A critical component in any component of a life support, device, or system whose failure to perform can be reasonably expected to cause the failure of the life support device or system, or to affect its safety or effectiveness.

ANTI-COUNTERFEITING POLICY

Fairchild Semiconductor Corporation's Anti-Counterfeiting Policy. Fairchild's Anti-Counterfeiting Policy is also stated on our external website, www.Fairchildsemi.com, under Sales Support.

Counterfeiting of semiconductor parts is a growing problem in the industry. All manufactures of semiconductor products are experiencing counterfeiting of their parts. Customers who inadvertently purchase counterfeit parts experience many problems such as loss of brand reputation, substandard performance, failed application, and increased cost of production and manufacturing delays. Fairchild is taking strong measures to protect ourselves and our customers from the proliferation of counterfeit parts. Fairchild strongly encourages customers to purchase Fairchild parts either directly from Fairchild or from Authorized Fairchild Distributors who are listed by country on our web page cited above. Products customers buy either from Fairchild directly or from Authorized Fairchild Distributors are genuine parts, have full traceability, meet Fairchild's quality standards for handing and storage and provide access to Fairchild's full range of up-to-date technical and product information. Fairchild and our Authorized Distributors will stand behind all warranties and will appropriately address and warranty issues that may arise. Fairchild will not provide any warranty coverage or other assistance for parts bought from Unauthorized Sources. Fairchild is committed to combat this global problem and encourage our customers to do their part in stopping this practice by buying direct or from authorized distributors.

PRODUCT STATUS DEFINITIONS

Definition of Terms

Datasheet Identification	Product Status	Definition
Advance Information	Formative / In Design	Datasheet contains the design specifications for product development. Specifications may change in any manner without notice.
Preliminary	First Production	Datasheet contains preliminary data; supplementary data will be published at a later date. Fairchild Semiconductor reserves the right to make changes at any time without notice to improve design.
No Identification Needed	Full Production	Datasheet contains final specifications. Fairchild Semiconductor reserves the right to make changes at any time without notice to improve the design.
Obsolete	Not In Production	Datasheet contains specifications on a product that is discontinued by Fairchild Semiconductor. The datasheet is for reference information only.

Rev. I66

©2002 Fairchild Semiconductor Corporation

ON Semiconductor and ON are trademarks of Semiconductor Components Industries, LLC dba ON Semiconductor or its subsidiaries in the United States and/or other countries. ON Semiconductor owns the rights to a number of patents, trademarks, copyrights, trade secrets, and other intellectual property. A listing of ON Semiconductor's product/patent coverage may be accessed at www.onsemi.com/site/pdf/Patent−Marking.pdf. ON Semiconductor reserves the right to make changes without further notice to any products herein. ON Semiconductor makes no warranty, representation or guarantee regarding the suitability of its products for any particular purpose, nor does ON Semiconductor assume any liability arising out of the application or use of any product or circuit, and specifically disclaims any and all liability, including without limitation special, consequential or incidental damages. Buyer is responsible for its products and applications using ON Semiconductor products, including compliance with all laws, regulations and safety requirements or standards, regardless of any support or applications information provided by ON Semiconductor. "Typical" parameters which may be provided in ON Semiconductor data sheets and/or specifications can and do vary in different applications and actual performance may vary over time. All operating parameters, including "Typicals" must be validated for each customer application by customer's technical experts. ON Semiconductor does not convey any license under its patent rights nor the rights of others. ON Semiconductor products are not designed, intended, or authorized for use as a critical component in life support systems or any FDA Class 3 medical devices or medical devices with a same or similar classification in a foreign jurisdiction or any devices intended for implantation in the human body. Should Buyer purchase or use ON Semiconductor products for any such unintended or unauthorized application, Buyer shall indemnify and hold ON Semiconductor and its officers, employees, subsidiaries, affiliates, and distributors harmless against all claims, costs, damages, and expenses, and reasonable attorney fees arising out of, directly or indirectly, any claim of personal injury or death associated with such unintended or unauthorized use, even if such claim alleges that ON Semiconductor was negligent regarding the design or manufacture of the part. ON Semiconductor is an Equal Opportunity/Affirmative Action Employer. This literature is subject to all applicable copyright laws and is not for resale in any manner.

PUBLICATION ORDERING INFORMATION

LITERATURE FULFILLMENT:
Literature Distribution Center for ON Semiconductor
19521 E. 32nd Pkwy, Aurora, Colorado 80011 USA
Phone: 303−675−2175 or 800−344−3860 Toll Free USA/Canada
Fax: 303−675−2176 or 800−344−3867 Toll Free USA/Canada
Email: orderlit@onsemi.com

N. American Technical Support: 800−282−9855 Toll Free USA/Canada
Europe, Middle East and Africa Technical Support:
Phone: 421 33 790 2910
Japan Customer Focus Center
Phone: 81−3−5817−1050

ON Semiconductor Website: **www.onsemi.com**

Order Literature: http://www.onsemi.com/orderlit

For additional information, please contact your local Sales Representative

ENTEGRECİ

Bu belge www.entegreci.com üzerinden sunulmaktadır.

Elektronik komponent tedarikinde Entegreci

Entegreci, Eskişehir merkezli, Türkiye geneline satış yapan bir elektronik komponent mağazasıdır. Entegreler (IC), mikrodenetleyiciler, transistörler, diyotlar, pasif elemanlar, konnektörler, modüller ve geliştirme kartları tek adetten seri üretim adetlerine kadar satılır. Ürün sayfalarında güncel stok durumunu, fiyatı ve datasheet bağlantısını bulabilirsiniz.

Parça koduyla arama

Üretici parça numarasını yazın; stok ve fiyatı hemen görün.

www.entegreci.com

Ürün kategorileri

Entegreden kapasitöre tüm elektronik komponent kategorileri.

Kategorilere göz atın

Üreticiler

Aradığınız üreticinin ürünlerini tek sayfada inceleyin.

Üreticileri görün

Toplu alım ve teklif

Listede olmayan ya da yüksek adetli parçalar için teklif isteyin.

Teklif isteyin

www.entegreci.com | **destek@entegreci.com** | **0850 305 90 34**

Entegreci is an online electronic components store based in Türkiye. Search by manufacturer part number to see stock, prices and datasheets for integrated circuits, microcontrollers, transistors, passive components and connectors, or request a quote for parts that are not listed.

Bu sayfa Entegreci tarafından eklenmiştir. Belgenin önceki sayfaları asıl yayıncısına aittir ve içeriği değiştirilmemiştir; en güncel sürüm için belgenin yayıncısına başvurun.