150 mA Voltage Regulator (Wide Input Voltage Range) for High Temperature Applications

NO. EA-346-140319

OUTLINE

The R1514x is a positive voltage regulator (VR) IC featuring 150 mA output current that is developed with CMOS process technology. The R1514xxxxB has features of high input voltage and ultra-low supply current. A peak current limit circuit, a short current limit circuit, and a thermal shutdown circuit are built in the R1514x. R1514x is very suitable for power source of industrial equipments such as FAs and smart meters since its operating temperature is −40°C to 105°C and the maximum input voltage is 36 V.

The output voltage is fixed in the R1514xxxxB and can be selected from the following: 2.5 V / 2.8 V / 3.0 V / 3.3 V / 3.4 V / 5.0 V / 6.0 V / 8.0 V / 8.5 V / 9.0 V / 12.0 V. The Output voltage accuracy is ±2%.

The packages for this IC are the SOT-89-5 for space saving and the HSOP-6J for higher power applications.

FEATURES

- Input Voltage Range (Maximum Rating) ..... 4 V to 36 V (50 V)
- Operating Temperature ..... −40°C to 105°C (※)
- Supply Current (I_{SS}) ..... Typ. 9 µA
- Standby Current (Istandby) ..... Typ. 0.1 µA
- Temperature-Drift Coefficient of Output Voltage... Typ. ±100 ppm/°C
- Output Current (I_{OUT}) ..... Min. 150 mA (V_{IN} = V_{OUT} + 3.0 V; R1514x050B)
- Line Regulation..... Typ. 0.05%/V
- Output Voltage Accuracy ..... ±2%
- Output Voltage Range (V_{OUT}) ····· 2.5V / 2.8V / 3.0V / 3.3V / 3.4V / 5.0V / 6.0V / 8.0V / 8.5V / 9.0V / 12.0V
  Contact our company sales representatives for other voltages.
- Packages..... SOT-89-5, HSOP-6J
- Built-in Short Current Limit Circuit..... Typ. 50 mA
- Built-in Peak Current Limit Circuit
- Built-in Thermal Shutdown Circuit

※ This product is usable for the high-temperature applications since have passed a test at the high temperature. In addition, this product has a high-reliability since having passed our rigorous quality standards. To distinguish from the consumer products, “-Yx” is added at the end of the product name.

APPLICATIONS

- Industrial equipments such as FAs and smart meters
- Equipments used under high-temperature conditions
- Equipments accompanied by self-heating

BLOCK DIAGRAM

R1514xxxxB

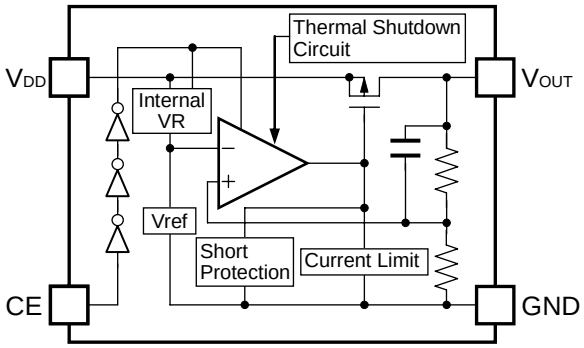

SELECTION GUIDE

The output voltage, package for the ICs can be selected at the user's request.

Product Name	Package	Quantity per Reel	Pb Free	Halogen Free
R1514HxxxB-T1-YE	SOT-89-5	1,000 pcs	Yes	Yes
R1514SxxxB-E2-YE	HSOP-6J	1,000 pcs	Yes	Yes

xxx: Specify the set output voltage (V_{SET})
2.5 V (025) / 2.8 V (028) / 3.0 V (030) / 3.3 V (033) / 3.4 V (034) / 5.0 V (050) / 6.0 V (060) /
8.0 V (080) / 8.5 V (085) / 9.0 V (090) / 12.0 V (120)

PIN DESCRIPTIONS

SOT-89-5

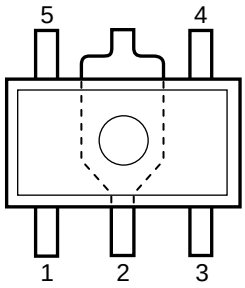

HSOP-6J

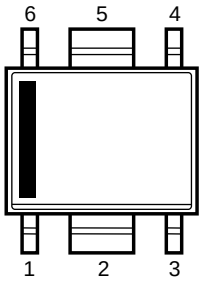

SOT-89-5

Pin No.	Symbol	Description
1	V_{OUT}	Output Pin
2	GND*1	Ground Pin
3	CE	Chip Enable Pin, Active-high.
4	GND*1	Ground Pin
5	V_{DD}	Input Pin

*1 The GND pin must be wired together when it is mounted on board.

HSOP-6J

Pin No.	Symbol	Description
1	V_{OUT}	Output Pin
2	GND*2	Ground Pin
3	CE	Chip Enable Pin, Active-high.
4	GND*2	Ground Pin
5	GND*2	Ground Pin
6	V_{DD}	Input Pin

*2 The GND pin must be wired together when it is mounted on board.

ABSOLUTE MAXIMUM RATINGS

Symbol	Item		Rating	Unit
V_{IN}	Input Voltage		−0.3 to 50	V
V_{IN}	Peak Input Voltage[*3]		60	V
V_{CE}	Input Voltage (CE Pin)		−0.3 to V_{IN} + 0.3 ≤ 50	V
V_{OUT}	Output Voltage		−0.3 to V_{IN} + 0.3 ≤ 50	V
I_{OUT}	Output Current		250	mA
P_D	Power Dissipation (SOT-89-5)[*4]	Standard Land Pattern	900	mW
		High Wattage Land Pattern	1300	
	Power Dissipation (HSOP-6J) [*4]	Standard Land Pattern	1700	
		Ultra High Wattage Land Pattern	2700	
Tj	Junction Temperature		−40 to 125	°C
Tstg	Storage Temperature Range		−55 to 125	°C

[*3] Duration time = 200 ms
[*4] Refer to *PACKAGE INFORMATION* for detailed information.

ABSOLUTE MAXIMUM RATINGS

Electronic and mechanical stress momentarily exceeded absolute maximum ratings may cause the permanent damages and may degrade the life time and safety for both device and system using the device in the field. The functional operation at or over these absolute maximum ratings is not assured.

RECOMMENDED OPERATING CONDITIONS

Symbol	Item	Rating	Unit
V_{IN}	Input Voltage	4 to 36	V
Ta	Operating Temperature Range	−40 to 105	°C

RECOMMENDED OPERATING CONDITIONS

All of electronic equipment should be designed that the mounted semiconductor devices operate within the recommended operating conditions. The semiconductor devices cannot operate normally over the recommended operating conditions, even if when they are used over such conditions by momentary electronic noise or surge. And the semiconductor devices may receive serious damage when they continue to operate over the recommended operating conditions.

ELECTRICAL CHARACTERISTICS

V_{IN} = V_{SET} + 3.0 V, C_{IN} = 0.1 µF, C_{OUT} = 0.1µF, unless otherwise noted.
The specifications surrounded by ☐ are guaranteed by design engineering at −40°C ≤ Ta ≤ 105°C.

R1514xxxxB (Ta = 25°C)

Symbol	Item	Conditions		Min.	Typ.	Max.	Unit
I_{SS}	Supply Current	I_{OUT} = 0 mA			9	20	µA
Istandby	Standby Current	V_{IN} = 36 V, V_{CE} = 0 V			0.1	1.0	µA
V_{OUT}	Output Voltage	I_{OUT} = 1 mA	Ta = 25°C	x 0.98		x 1.02	V
			−40°C ≤ Ta ≤ 105°C	x 0.97		x 1.03	
I_{OUT}	Output Current			Refer to the *Product-specific Electrical Characteristics*			
$\Delta V_{OUT}/\Delta I_{OUT}$	Load Regulation	1 mA ≤ I_{OUT} ≤ 40 mA		Refer to the *Product-specific Electrical Characteristics*			
$\Delta V_{OUT}/\Delta V_{IN}$	Line Regulation	V_{OUT} + 1.5 V ≤ V_{IN} ≤ 36 V, I_{OUT} = 1 mA			0.05	0.20	%/V
V_{DIF}	Dropout Voltage	I_{OUT} = 20 mA		Refer to the *Product-specific Electrical Characteristics*			
I_{SC}	Short Current Limit	V_{OUT} = 0 V			50		mA
V_{CEH}	CE Input Voltage "H"			1.5		V_{IN}	V
V_{CEL}	CE Input Voltage "L"			0.0		0.3	V
T_{TSD}	Thermal Shutdown Temperature	Junction Temperature			160		°C
T_{TSR}	Thermal Shutdown Released Temperature	Junction Temperature			130		°C

All test items listed under Electrical Characteristics are done under the pulse load condition (Tj ≈ Ta = 25°C).

Product-specific Electrical Characteristics (Ta = 25°C)

Product Name	V_{OUT} (V)					I_{OUT} (mA)		$\Delta V_{OUT}/\Delta I_{OUT}$ (mV)		V_{DIF} (V)		
	Ta = 25°C			−40°C ≤ Ta ≤ 105°C		Ta = 25°C	−40°C ≤ Ta ≤ 105°C			Ta = 25°C		−40°C ≤ Ta ≤ 105°C
	MIN.	TYP.	MAX.	MIN.	TYP.	MIN.	MIN.	TYP.	MAX.	TYP.	MAX.	MAX.
R1514x025B	2.450	2.500	2.550	2.425	2.575	100	90	10	25		1.5	1.5
R1514x028B	2.744	2.800	2.856	2.716	2.884						1.2	1.2
R1514x030B	2.940	3.000	3.060	2.910	3.090	120	120				1.0	1.0
R1514x033B	3.234	3.300	3.366	3.201	3.399						0.7	0.7
R1514x034B	3.332	3.400	3.468	3.298	3.502						0.6	0.7
R1514x050B	4.900	5.000	5.100	4.850	5.150	150	150	20	35	0.20	0.35	0.40
R1514x060B	5.880	6.000	6.120	5.820	6.180							
R1514x080B	7.840	8.000	8.160	7.760	8.240							
R1514x085B	8.330	8.500	8.670	8.245	8.755							
R1514x090B	8.820	9.000	9.180	8.730	9.270							
R1514x120B	11.760	12.000	12.240	11.640	12.360							

TYPICAL APPLICATION

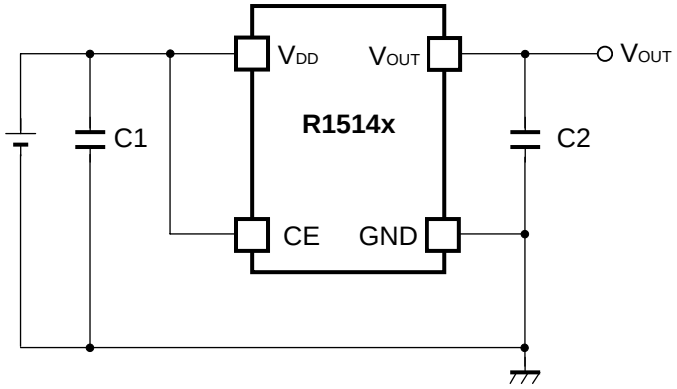

External Components:

C1 (C_{IN})	0.1 µF (Ceramic)
C2 (C_{OUT})	0.1 µF (Ceramic)

TECHNICAL NOTES

PCB Layout

Ensure the V_{DD} and GND lines are sufficiently robust. If their impedance is too high, noise pickup or unstable operation may result. Connect a capacitor with a suitable value between the V_{DD} and GND, and as close as possible to the pins.

Phase Compensation

Phase Compensation of the R1514x has been made internally for stable operation even though the load current would vary. Therefore, without the capacitors, C1 and C2, the output voltage is regulated, however, for more stable operation, use capacitors as C1 and C2. Especially, if the input line is long and impedance is high, C1 is necessary. Moreover, if you use rather large C2, transient response will be improved. Recommended value is in the range from 0.1 µF to 10 µF. Wiring should be made as short as possible.

Connect the capacitor, C1 between V_{DD} pin and GND and C2 between V_{OUT} and GND as close as possible.

Thermal Shutdown

Thermal shutdown function is included in the R1514x, if the junction temperature is more than or equal to 160°C (Typ.), the operation of regulator would stop. After that, when the junction temperature is less than or equal to 130°C (Typ.), the operation of regulator would restart. Unless the cause of rising temperature would remove, the regulator repeats on and off, and output waveform would be like consecutive pulses.

Chip Enable Circuit

Do not make voltage level of chip enable pin keep floating level, or in between V_{CEH} and V_{CEL}. Otherwise, the output voltage would be unstable or indefinite, or unexpected current would flow internally.

TYPICAL APPLICATION FOR IC CHIP BREAKDOWN PREVENTION

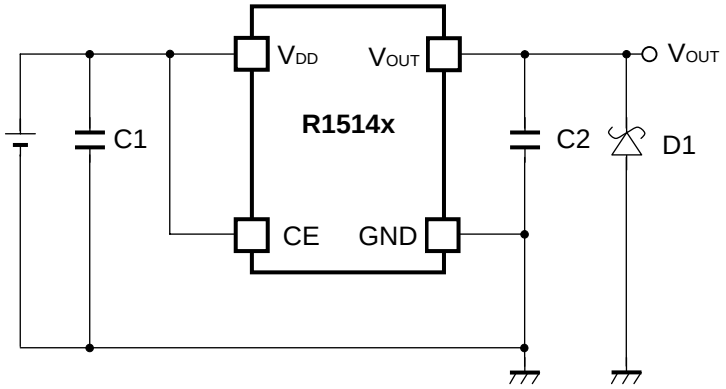

When a sudden surge of electrical current travels along the V_{OUT} pin and GND due to a short-circuit, electrical resonance of a circuit involving an output capacitor (C2) and a short circuit inductor generates a negative voltage and may damage the device or the load devices. Connecting a schottky diode (D1) between the V_{OUT} pin and GND has the effect of preventing damage to them.

PACKAGE INFORMATION

POWER DISSIPATION (SOT89-5)

Power Dissipation (P_D) depends on conditions of mounting on board. This specification is based on the measurement at the condition below:

Measurement Conditions (SOT89-5)

	High Wattage Land Pattern	Standard Land Pattern
Environment	Mounting on board (Wind velocity = 0 m/s)	Mounting on board (Wind velocity = 0 m/s)
Board Material	Glass cloth epoxy plastic (Double sided)	Glass cloth epoxy plastic (Double sided)
Board Dimensions	30 mm x 30 mm x 1.6 mm	50 mm x 50 mm x 1.6 mm
Copper Ratio	Top side: Approx. 20% , Back side: Approx. 100%	Top side: Approx. 10% , Back side: Approx. 100%
Through-hole	ϕ0.85 mm x 10 pcs	-

Measurement Result (SOT89-5) (Ta = 25°C, Tjmax = 125°C)

	High Wattage Land Pattern	Standard Land Pattern	Free Air
Power Dissipation	1300 mW	900 mW	500 mW
Thermal Resistance	77°C/W	111°C/W	200°C/W

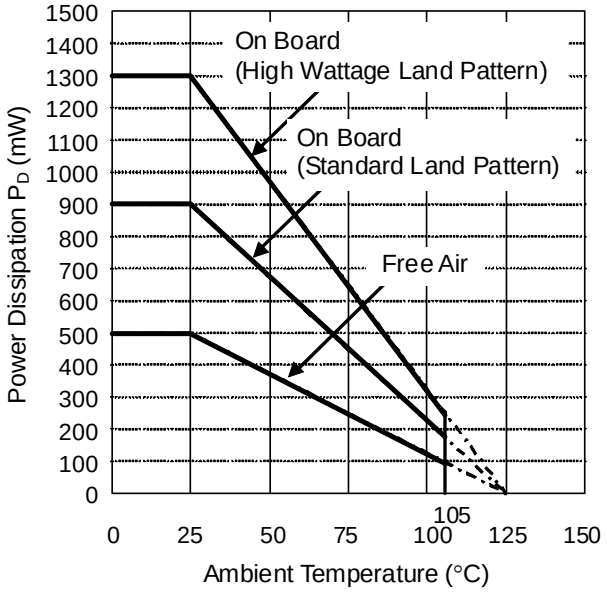

Power Dissipation vs. Ambience Temperature (SOT89-5)

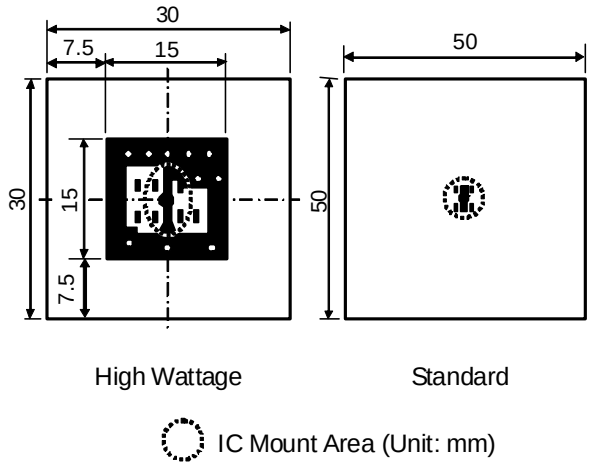

Measurement Board Pattern (SOT89-5)

PACKAGE DIMENSIONS (SOT89-5)

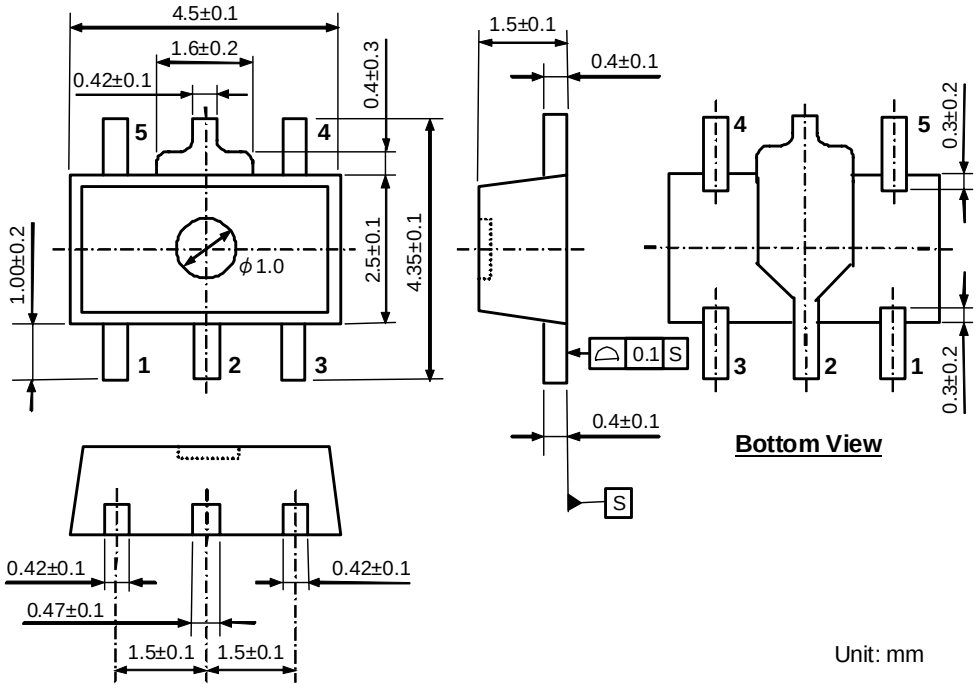

Unit: mm

MARK SPECIFICATION (SOT-89-5)

①②③④: Product Code … **Refer to *R1514H MARK SPECIFICATION TABLE (SOT-89-5)***

⑤⑥: Lot Number … Alphanumeric Serial Number

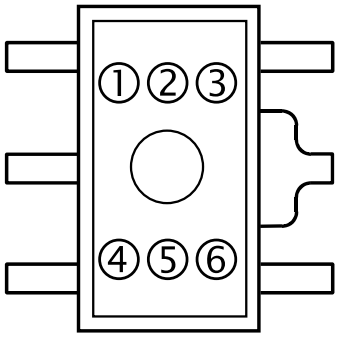

R1514H MARK SPECIFICATION TABLE (SOT-89-5)

Product Name	①②③④	V_{SET}
R1514H025B	M 0 2 5	2.5 V
R1514H028B	M 0 2 8	2.8 V
R1514H030B	M 0 3 0	3.0 V
R1514H033B	M 0 3 3	3.3 V
R1514H034B	M 0 3 4	3.4 V
R1514H050B	M 0 5 0	5.0 V
R1514H060B	M 0 6 0	6.0 V
R1514H080B	M 0 8 0	8.0 V
R1514H085B	M 0 8 5	8.5 V
R1514H090B	M 0 9 0	9.0 V
R1514H120B	M 1 2 0	12.0 V

POWER DISSIPATION (HSOP-6J)

Power Dissipation (P_D) depends on conditions of mounting on board. This specification is based on the measurement at the condition below:

Measurement Conditions

	Ultra High Wattage Land Pattern	Standard Land Pattern
Environment	Mounting on Board (Wind velocity = 0 m/s)	Mounting on Board (Wind velocity = 0 m/s)
Board Material	Glass cloth epoxy plastic (4 Layers)	Glass cloth epoxy plastic (2 Layers)
Board Dimensions	76.2 mm × 114.3 mm × 0.8 mm	50 mm × 50 mm × 1.6 mm
Copper Ratio	96%	50%
Through-hole	ϕ0.3 mm × 28 pcs	ϕ0.5 mm × 24 pcs

Measurement Result (Ta = 25°C, Tjmax = 125°C)

	Ultra High Wattage Land Pattern	Standard Land Pattern	Free Air
Power Dissipation	2700 mW	1700 mW	540 mW
Thermal Resistance	37°C/W	59°C/W	185°C/W

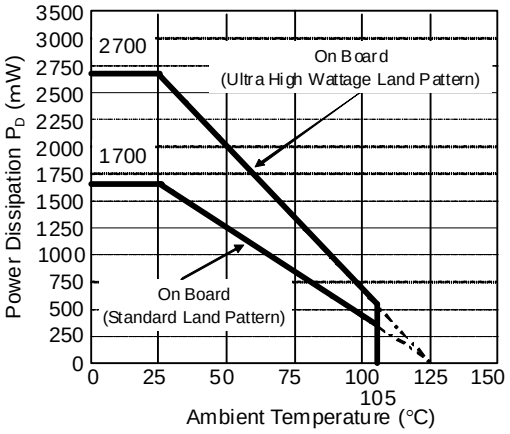

Power Dissipation

Power Dissipation vs. Ambience Temperature (HSOP-6J)

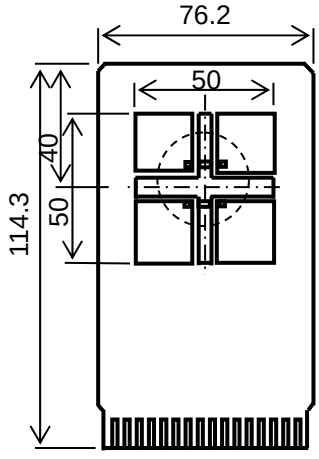

Ultra High Wattage Land Pattern
IC Mount Area (Unit: mm)

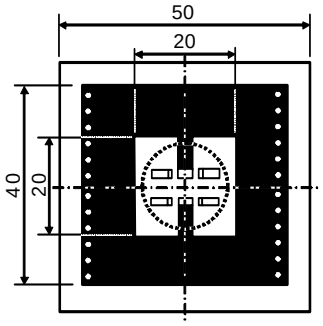

Standard

Measurement Board Pattern
IC Mount Area (Unit: mm)

Measurement Board Pattern (HSOP-6J)

PACKAGE DIMENSIONS (HSOP-6J)

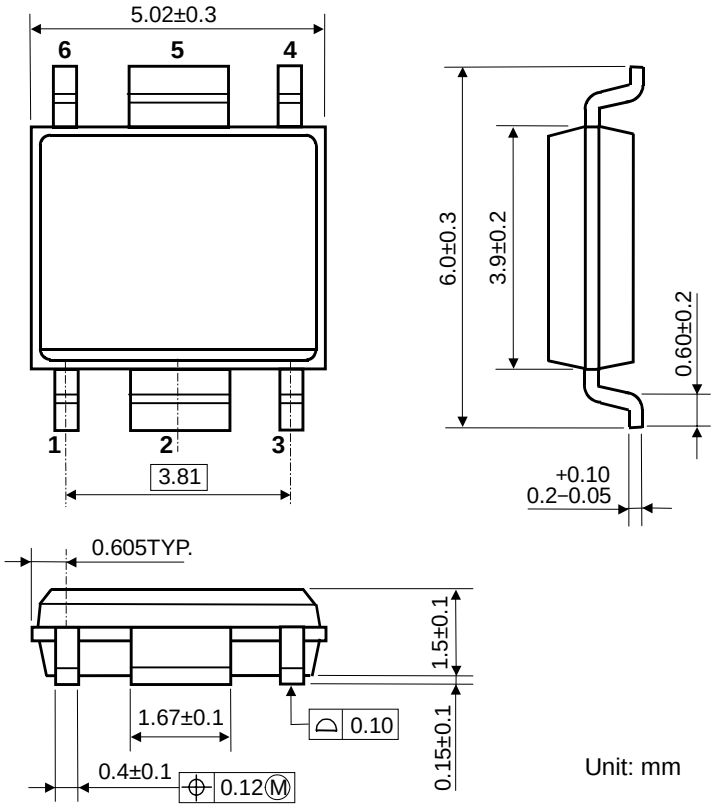

Unit: mm

MARK SPECIFICATION (HSOP-6J)

①②③④: Product Code … **Refer to *R1514S MARK SPECIFICATION TABLE (HSOP-6J)***
⑤⑥: Lot Number … Alphanumeric Serial Number

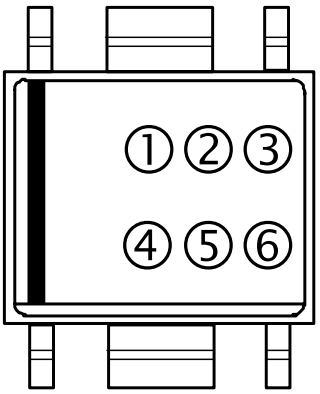

R1514S MARK SPECIFICATION TABLE (HSOP-6J)

Product Name	①②③④	V_{SET}
R1514S025B	E 0 2 5	2.5 V
R1514S028B	E 0 2 8	2.8 V
R1514S030B	E 0 3 0	3.0 V
R1514S033B	E 0 3 3	3.3 V
R1514S034B	E 0 3 4	3.4 V
R1514S050B	E 0 5 0	5.0 V
R1514S060B	E 0 6 0	6.0 V
R1514S080B	E 0 8 0	8.0 V
R1514S085B	E 0 8 5	8.5 V
R1514S090B	E 0 9 0	9.0 V
R1514S120B	E 1 2 0	12.0 V

TEST CIRCUITS

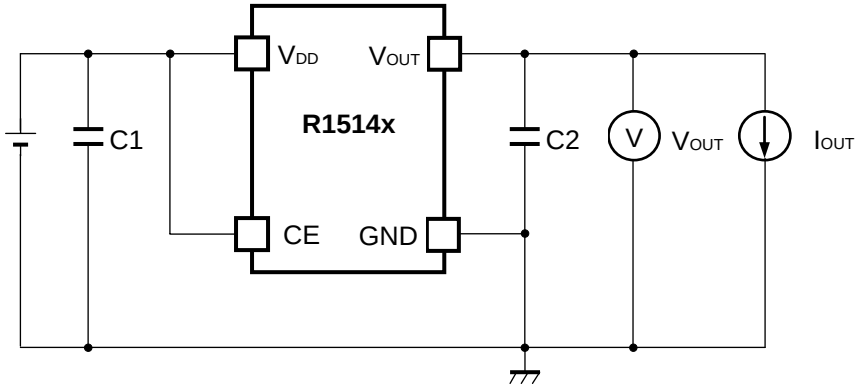

C1 = Ceramic 0.1 µF
C2 = Ceramic 0.1 µF

Basic Test Circuit

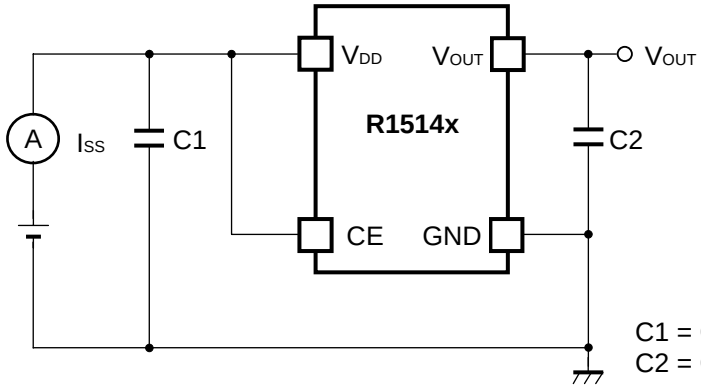

C1 = Ceramic 0.1 µF
C2 = Ceramic 0.1 µF

Test Circuit for Supply Current

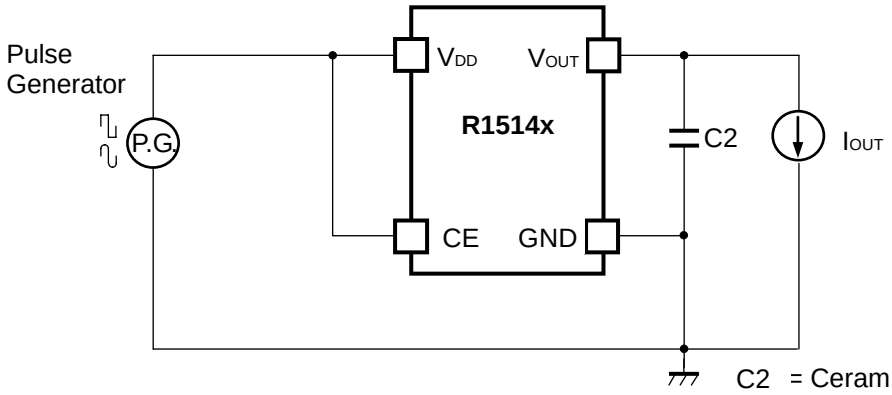

C2 = Ceramic 0.1 µF

Test Circuit for Line Transient Response

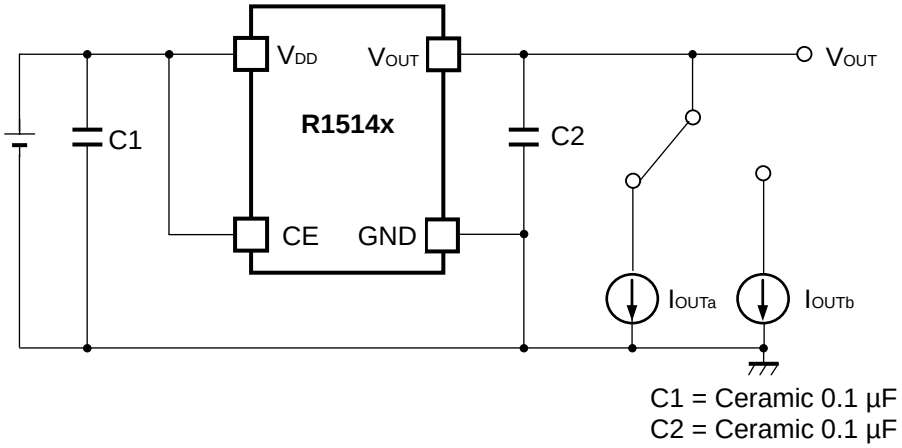

Test Circuit for Load Transient Response

TYPICAL CHARACTERISTICS

Note: Typical Characteristics are intended to be used as reference data; they are not guaranteed.

1) Output Voltage vs. Output Current (Ta = 25°C)

R1514x020B

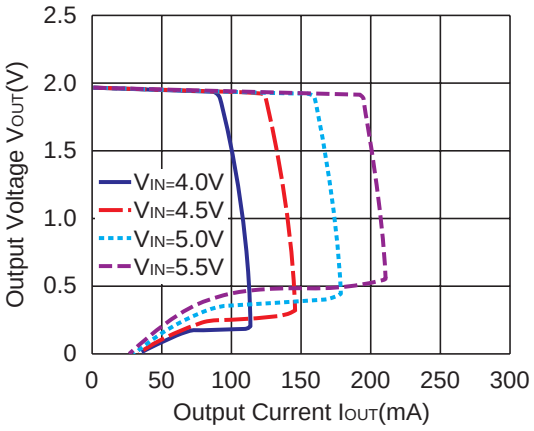

R1514x030B

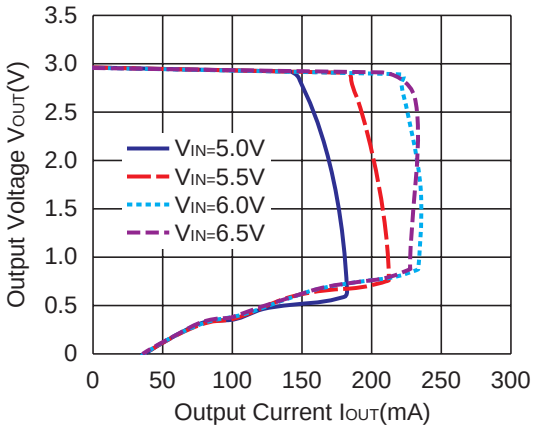

R1514x050B

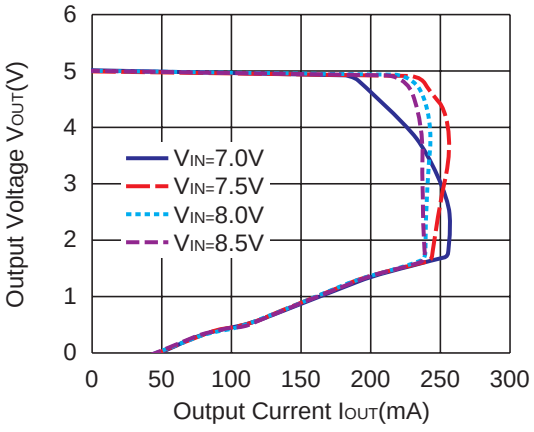

R1514x090B

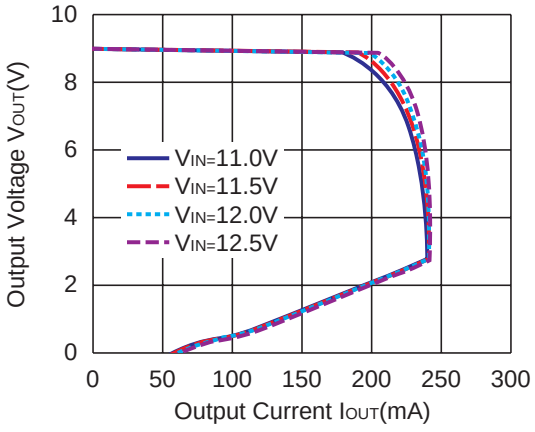

2) Output Voltage vs. Input Voltage (Ta = 25°C)

R1514x020B

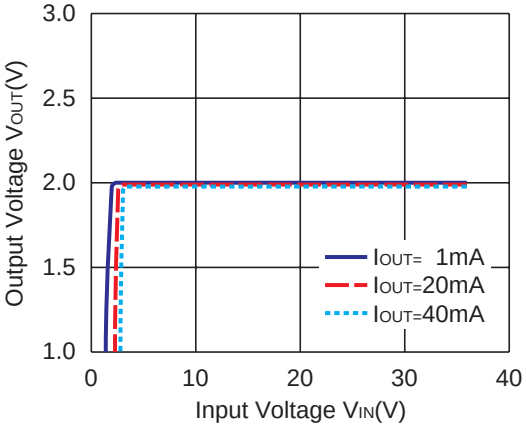

R1514x030B

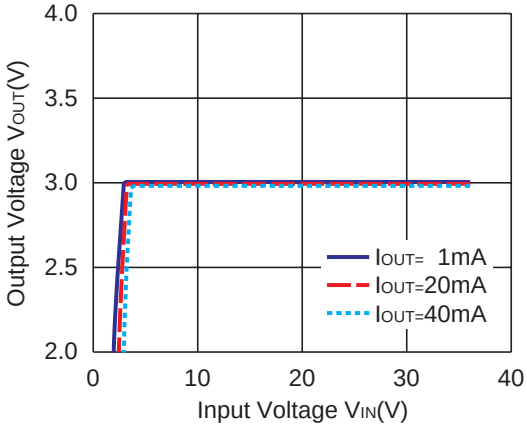

R1514x050B

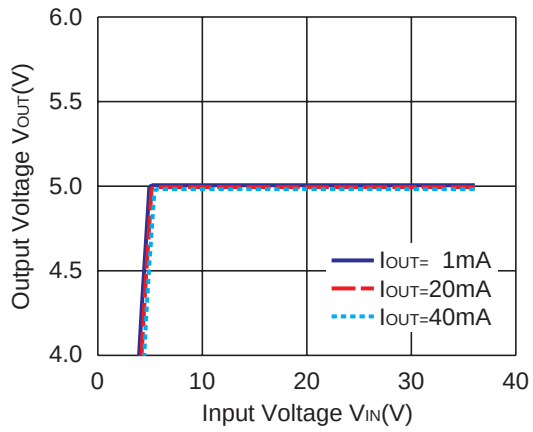

R1514x090B

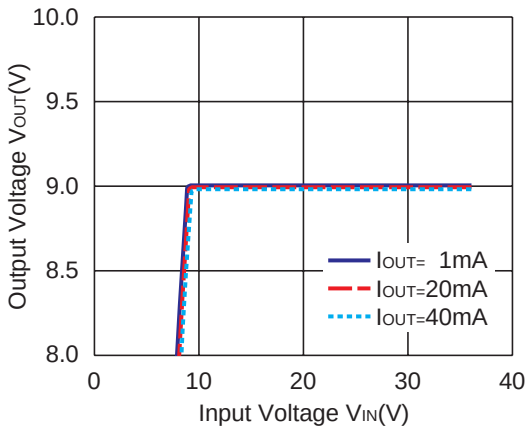

3) Dropout Voltage vs. Output Current

R1514x020B

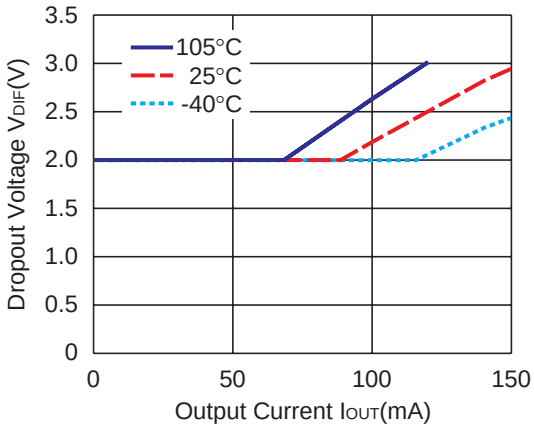

R1514x030B

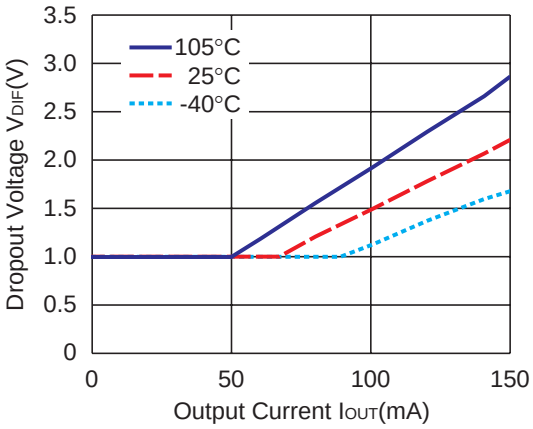

R1514x050B

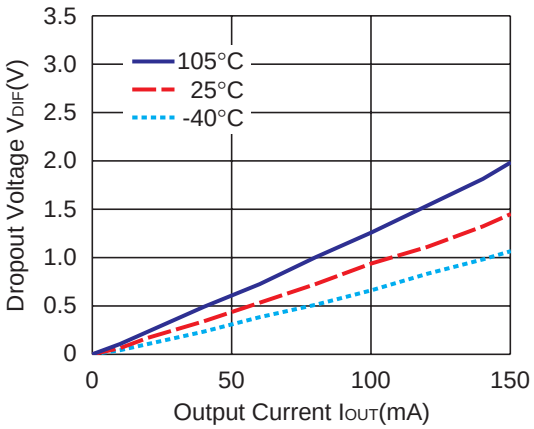

R1514x090B

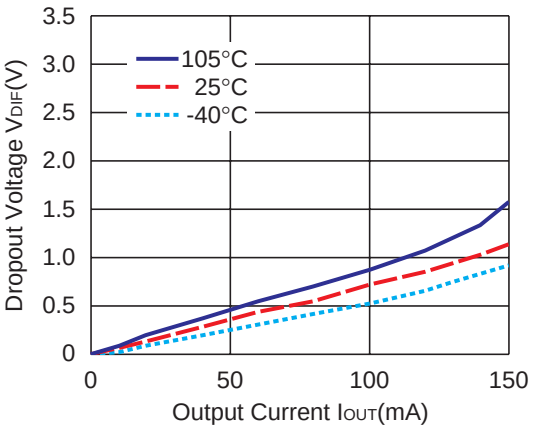

4) Output Voltage vs. Temperature

R1514x020B

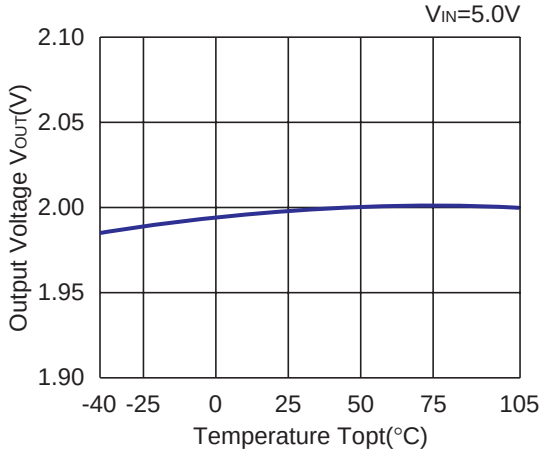

R1514x030B

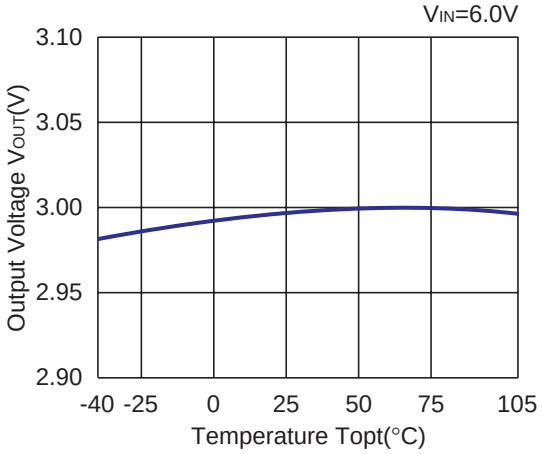

R1514x050B

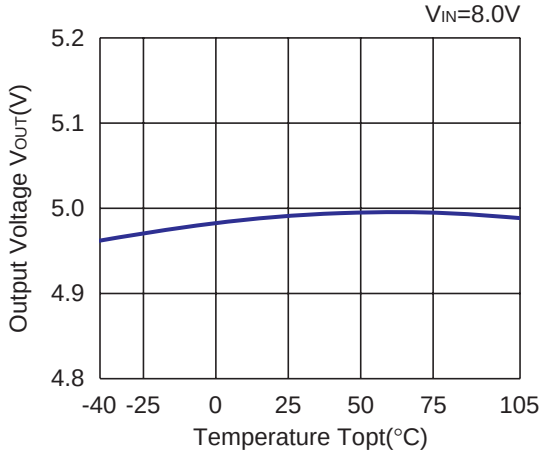

R1514x090B

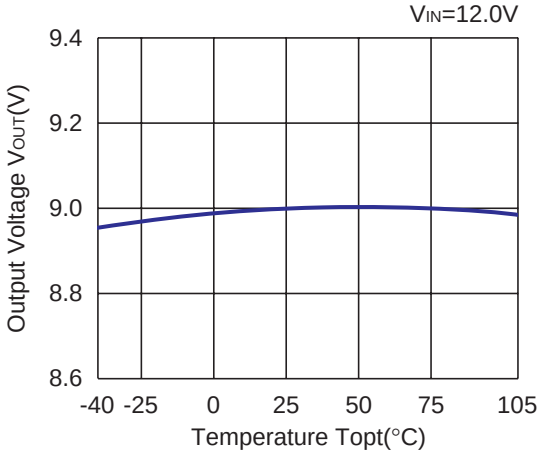

5) Supply Current vs. Input Voltage (Ta = 25°C)

R1514x020B

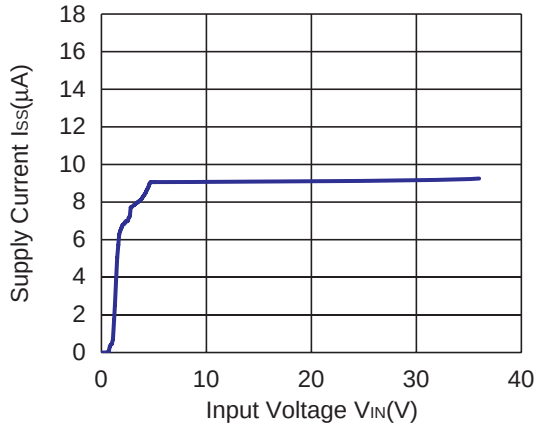

R1514x030B

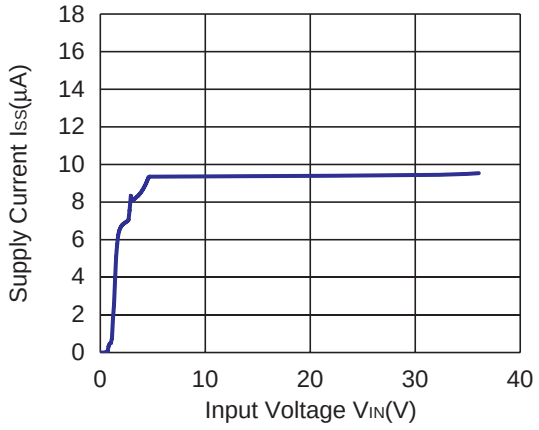

R1514x050B

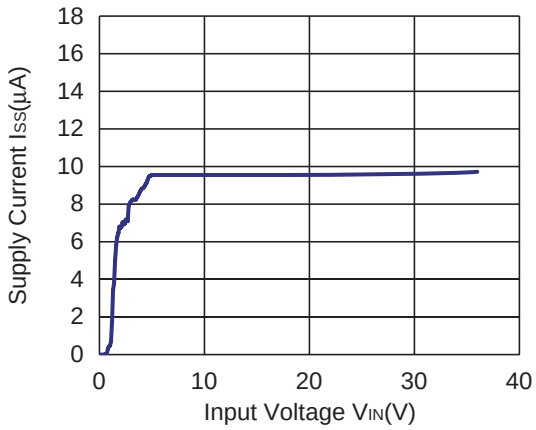

R1514x090B

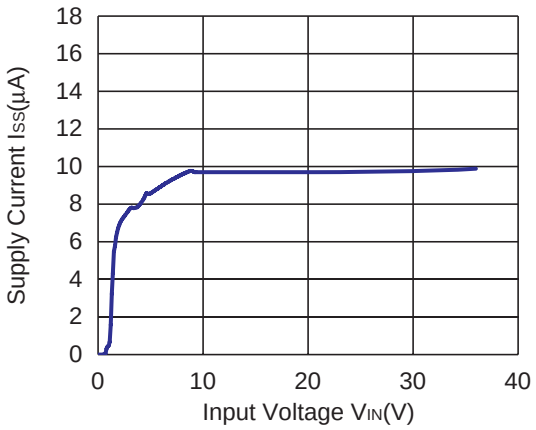

6) Supply Current vs. Temperature

R1514x020B

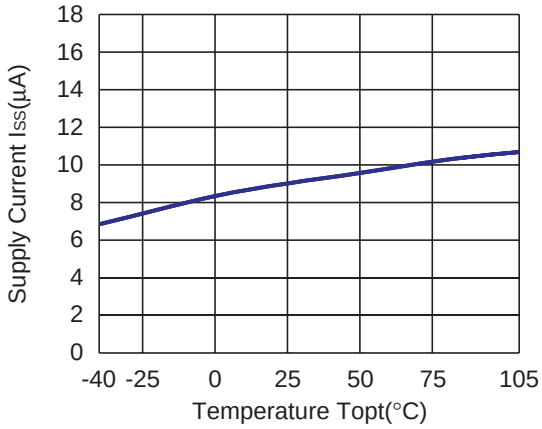

R1514x030B

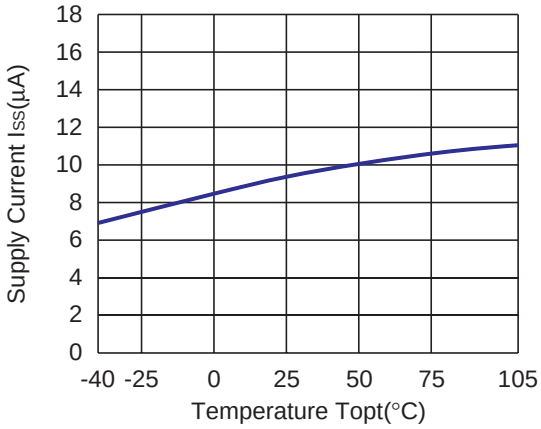

R1514x050B

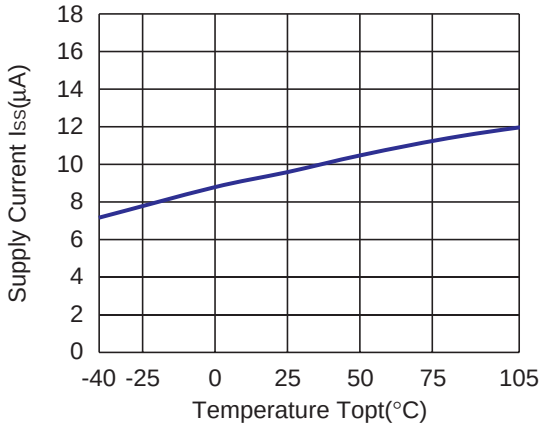

R1514x090B

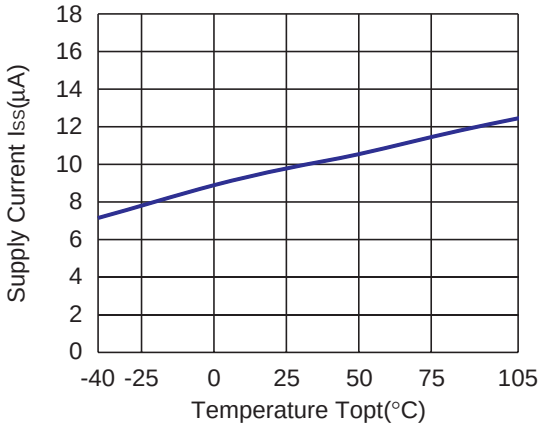

7) Input Transient Response (I_{OUT} = 1 mA, tr = tf = 50 µs, C2 = Ceramic 0.1 µF, Ta = 25°C)

R1514x020B

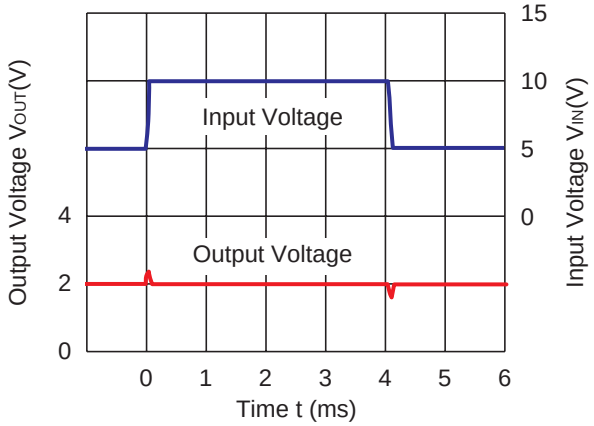

R1514x030B

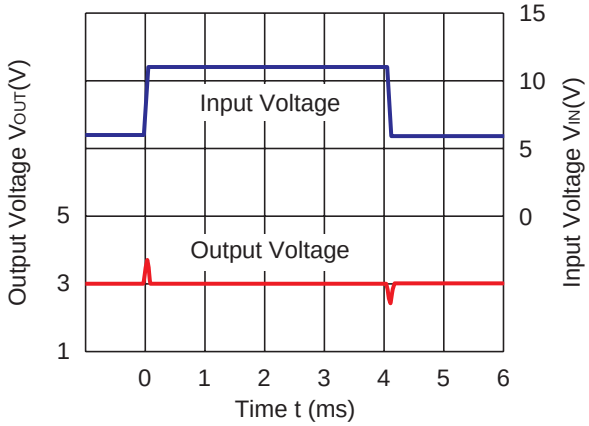

R1514x050B

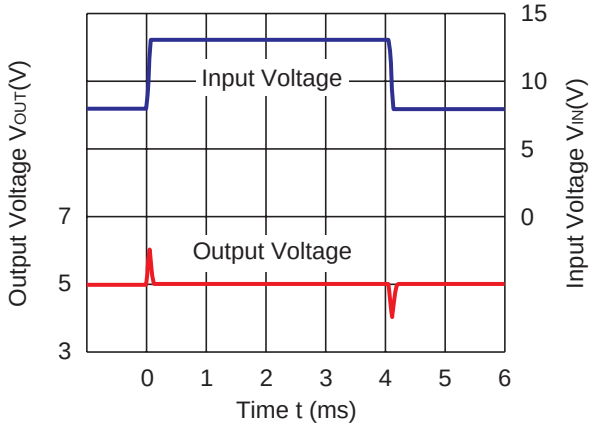

R1514x090B

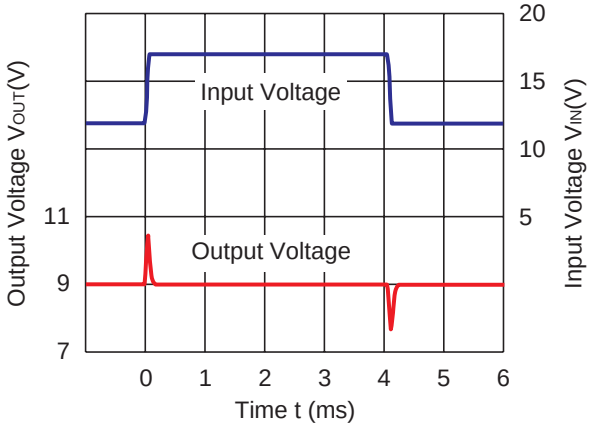

8) Load Transient Response (C2 = Ceramic 0.1 µF, Ta = 25°C)

R1514x020B

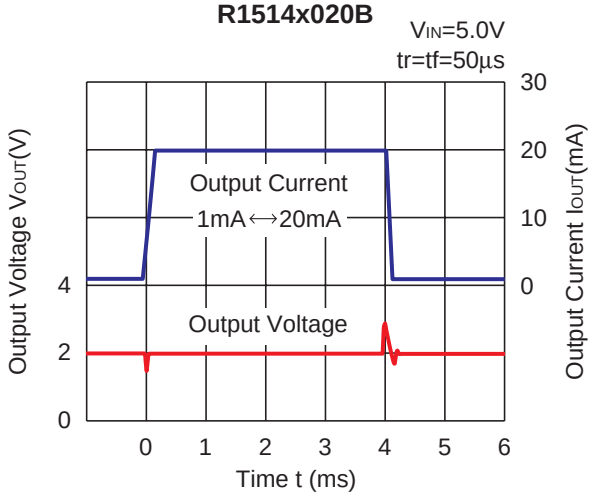

R1514x030B

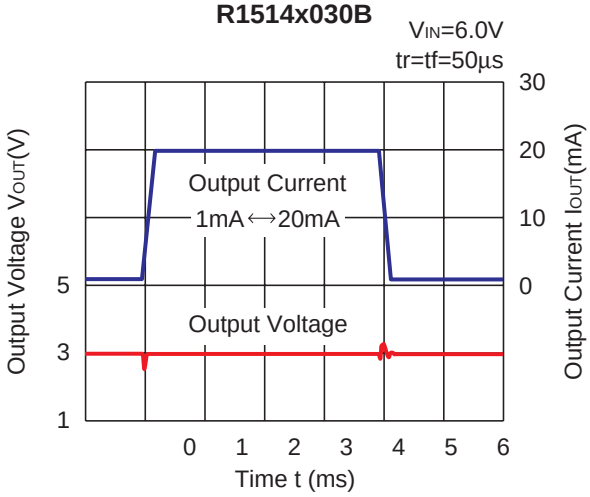

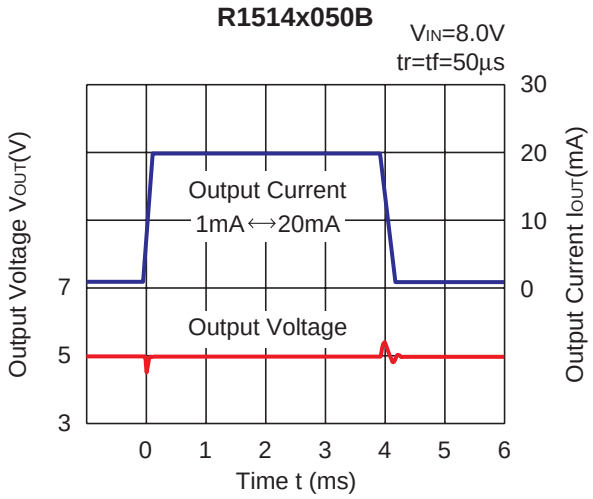
R1514x050B
VIN=8.0V
tr=tf=50µs
Output Current
1mA⟷20mA
Output Voltage
Output Voltage VOUT(V)
Output Current IOUT(mA)
Time t (ms)
7
5
3
30
20
10
0
0 1 2 3 4 5 6

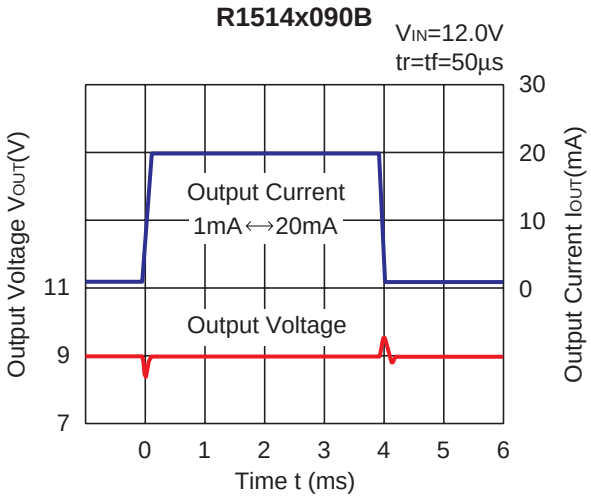
R1514x090B
VIN=12.0V
tr=tf=50µs
Output Current
1mA⟷20mA
Output Voltage
Output Voltage VOUT(V)
Output Current IOUT(mA)
Time t (ms)
11
9
7
30
20
10
0
0 1 2 3 4 5 6

1. The products and the product specifications described in this document are subject to change or discontinuation of production without notice for reasons such as improvement. Therefore, before deciding to use the products, please refer to our sales representatives for the latest information thereon.
2. The materials in this document may not be copied or otherwise reproduced in whole or in part without prior written consent of our company.
3. Please be sure to take any necessary formalities under relevant laws or regulations before exporting or otherwise taking out of your country the products or the technical information described herein.
4. The technical information described in this document shows typical characteristics of and example application circuits for the products. The release of such information is not to be construed as a warranty of or a grant of license under our company's or any third party's intellectual property rights or any other rights.
5. The products listed in this document are intended and designed for use as general electronic components in standard applications (office equipment, telecommunication equipment, measuring instruments, consumer electronic products, amusement equipment etc.). Those customers intending to use a product in an application requiring extreme quality and reliability, for example, in a highly specific application where the failure or misoperation of the product could result in human injury or death (aircraft, spacevehicle, nuclear reactor control system, traffic control system, automotive and transportation equipment, combustion equipment, safety devices, life support system etc.) should first contact us.
6. We are making our continuous effort to improve the quality and reliability of our products, but semiconductor products are likely to fail with certain probability. In order to prevent any injury to persons or damages to property resulting from such failure, customers should be careful enough to incorporate safety measures in their design, such as redundancy feature, fire containment feature and fail-safe feature. We do not assume any liability or responsibility for any loss or damage arising from misuse or inappropriate use of the products.
7. Anti-radiation design is not implemented in the products described in this document.
8. The X-ray exposure can influence functions and characteristics of the products. Confirm the product functions and characteristics in the evaluation stage.
9. WLCSP products should be used in light shielded environments. The light exposure can influence functions and characteristics of the products under operation or storage.
10. There can be variation in the marking when different AOI (Automated Optical Inspection) equipment is used. In the case of recognizing the marking characteristic with AOI, please contact our sales or our distributor before attempting to use AOI.
11. Please contact our sales representatives should you have any questions or comments concerning the products or the technical information.

NISSHINBO

Nisshinbo Micro Devices Inc.

Official website
https://www.nisshinbo-microdevices.co.jp/en/
Purchase information
https://www.nisshinbo-microdevices.co.jp/en/buy/

ENTEGRECİ

Bu belge www.entegreci.com üzerinden sunulmaktadır.

Elektronik komponent tedarikinde Entegreci

Entegreci, Eskişehir merkezli, Türkiye geneline satış yapan bir elektronik komponent mağazasıdır. Entegreler (IC), mikrodenetleyiciler, transistörler, diyotlar, pasif elemanlar, konnektörler, modüller ve geliştirme kartları tek adetten seri üretim adetlerine kadar satılır. Ürün sayfalarında güncel stok durumunu, fiyatı ve datasheet bağlantısını bulabilirsiniz.

Parça koduyla arama

Üretici parça numarasını yazın; stok ve fiyatı hemen görün.

www.entegreci.com

Ürün kategorileri

Entegreden kapasitöre tüm elektronik komponent kategorileri.

Kategorilere göz atın

Üreticiler

Aradığınız üreticinin ürünlerini tek sayfada inceleyin.

Üreticileri görün

Toplu alım ve teklif

Listede olmayan ya da yüksek adetli parçalar için teklif isteyin.

Teklif isteyin

www.entegreci.com | **destek@entegreci.com** | **0850 305 90 34**

Entegreci is an online electronic components store based in Türkiye. Search by manufacturer part number to see stock, prices and datasheets for integrated circuits, microcontrollers, transistors, passive components and connectors, or request a quote for parts that are not listed.

Bu sayfa Entegreci tarafından eklenmiştir. Belgenin önceki sayfaları asıl yayıncısına aittir ve içeriği değiştirilmemiştir; en güncel sürüm için belgenin yayıncısına başvurun.