MOSFET - Power, Single N-Channel

60 V, 23.4 mΩ, 24.0 A

NVMYS022N06C

$V_{(BR)DSS}$	$R_{DS(ON)}$ MAX	I_D MAX
60 V	23.4 mΩ @ 10 V	24.0 A

Features

- Small Footprint (5x6 mm) for Compact Design
- Low $R_{DS(on)}$ to Minimize Conduction Losses
- Low Q_G and Capacitance to Minimize Driver Losses
- AEC−Q101 Qualified and PPAP Capable
- These Devices are Pb−Free and are RoHS Compliant

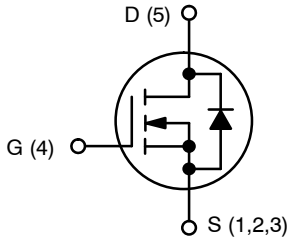

N−CHANNEL MOSFET

MAXIMUM RATINGS (T_J = 25°C unless otherwise noted)

Parameter			Symbol	Value	Unit
Drain−to−Source Voltage			V_{DSS}	60	V
Gate−to−Source Voltage			V_{GS}	±20	V
Continuous Drain Current $R_{\theta JC}$ (Notes 1, 3)	Steady State	T_C = 25°C	I_D	24.0	A
		T_C = 100°C		16.9	
Power Dissipation $R_{\theta JC}$ (Note 1)		T_C = 25°C	P_D	28.2	W
		T_C = 100°C		14.1	
Continuous Drain Current $R_{\theta JA}$ (Notes 1, 2, 3)	Steady State	T_A = 25°C	I_D	8.5	A
		T_A = 100°C		6.0	
Power Dissipation $R_{\theta JA}$ (Notes 1, 2)		T_A = 25°C	P_D	3.6	W
		T_A = 100°C		1.8	
Pulsed Drain Current	T_A = 25°C, t_p = 10 μs		I_{DM}	113	A
Operating Junction and Storage Temperature Range			T_J, T_{stg}	−55 to +175	°C
Source Current (Body Diode)			I_S	23.5	A
Single Pulse Drain−to−Source Avalanche Energy ($I_{L(pk)}$ = 1.1 A)			E_{AS}	61	mJ
Lead Temperature for Soldering Purposes (1/8″ from case for 10 s)			T_L	260	°C

Stresses exceeding those listed in the Maximum Ratings table may damage the device. If any of these limits are exceeded, device functionality should not be assumed, damage may occur and reliability may be affected.

THERMAL RESISTANCE MAXIMUM RATINGS

Parameter	Symbol	Value	Unit
Junction−to−Case − Steady State	$R_{\theta JC}$	5.3	°C/W
Junction−to−Ambient − Steady State (Note 2)	$R_{\theta JA}$	42.2	

1. The entire application environment impacts the thermal resistance values shown, they are not constants and are only valid for the particular conditions noted.
2. Surface−mounted on FR4 board using a 650 mm^2, 2 oz. Cu pad.
3. Maximum current for pulses as long as 1 second is higher but is dependent on pulse duration and duty cycle.



LFPAK4
CASE 760AB

MARKING DIAGRAM

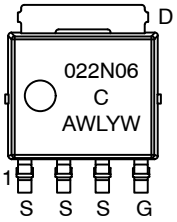

022N06C	= Specific Device Code
A	= Assembly Location
WL	=Wafer Lot
Y	= Year
W	= Work Week

ORDERING INFORMATION

See detailed ordering, marking and shipping information on page 5 of this data sheet.

© Semiconductor Components Industries, LLC, 2021

ELECTRICAL CHARACTERISTICS (T_J = 25°C unless otherwise specified)

Parameter	Symbol	Test Condition		Min	Typ	Max	Unit
OFF CHARACTERISTICS							
Drain−to−Source Breakdown Voltage	$V_{(BR)DSS}$	V_{GS} = 0 V, I_D = 250 μA		60			V
Drain−to−Source Breakdown Voltage Temperature Coefficient	$V_{(BR)DSS}/T_J$				24		mV/°C
Zero Gate Voltage Drain Current	I_{DSS}	V_{GS} = 0 V, V_{DS} = 48 V	T_J = 25 °C			10	μA
			T_J = 125°C			250	
Gate−to−Source Leakage Current	I_{GSS}	V_{DS} = 0 V, V_{GS} = 20 V				100	nA
ON CHARACTERISTICS							
Gate Threshold Voltage	$V_{GS(TH)}$	V_{GS} = V_{DS}, I_D = 16 μA		2.0		4.0	V
Threshold Temperature Coefficient	$V_{GS(TH)}/T_J$				−8.3		mV/°C
Drain−to−Source On Resistance	$R_{DS(on)}$	V_{GS} = 10 V	I_D = 3 A		18.8	23.4	mΩ
CHARGES, CAPACITANCES & GATE RESISTANCE							
Input Capacitance	C_{ISS}	V_{GS} = 0 V, f = 1 MHz, V_{DS} = 25 V			328		pF
Output Capacitance	C_{OSS}				239		
Reverse Transfer Capacitance	C_{RSS}				5		
Total Gate Charge	$Q_{G(TOT)}$	V_{GS} = 10 V, V_{DS} = 48 V; I_D = 3 A			4.7		nC
Threshold Gate Charge	$Q_{G(TH)}$	V_{GS} = 10 V, V_{DS} = 48 V; I_D = 3 A			0.9		
Gate−to−Source Charge	Q_{GS}				1.5		
Gate−to−Drain Charge	Q_{GD}				0.8		
Plateau Voltage	V_{GP}				4.5		V
SWITCHING CHARACTERISTICS (Note 4)							
Turn−On Delay Time	$t_{d(ON)}$	V_{GS} = 10 V, V_{DS} = 48 V, I_D = 3 A, R_G = 2.5 Ω			6.4		ns
Rise Time	t_r				1.3		
Turn−Off Delay Time	$t_{d(OFF)}$				9.7		
Fall Time	t_f				3.9		
DRAIN−SOURCE DIODE CHARACTERISTICS							
Forward Diode Voltage	V_{SD}	V_{GS} = 0 V, I_S = 3 A	T_J = 25°C		0.81	1.2	V
			T_J = 125°C		0.66		
Reverse Recovery Time	t_{RR}	V_{GS} = 0 V, dI_S/dt = 100 A/μs, I_S = 3 A			18.6		ns
Charge Time	t_a				9.3		
Discharge Time	t_b				9.3		
Reverse Recovery Charge	Q_{RR}				6.3		nC

Product parametric performance is indicated in the Electrical Characteristics for the listed test conditions, unless otherwise noted. Product performance may not be indicated by the Electrical Characteristics if operated under different conditions.

4. Switching characteristics are independent of operating junction temperatures.

TYPICAL CHARACTERISTICS

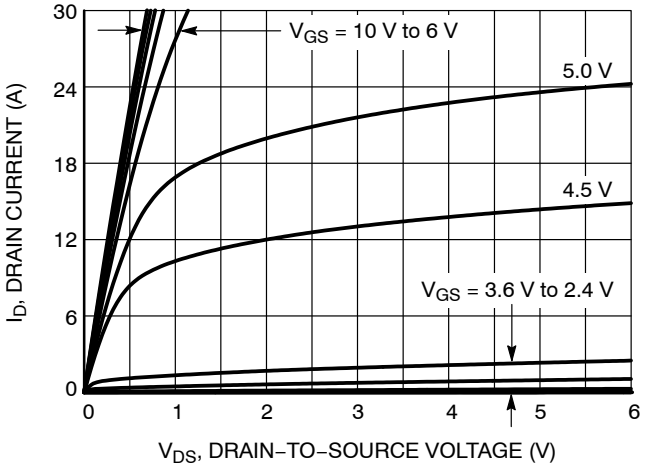

Figure 1. On−Region Characteristics

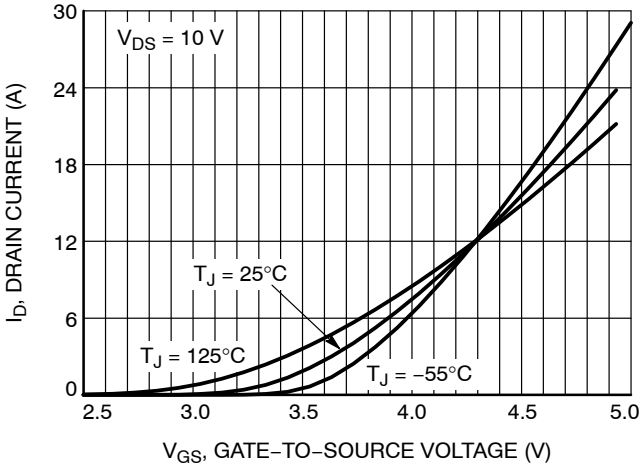

Figure 2. Transfer Characteristics

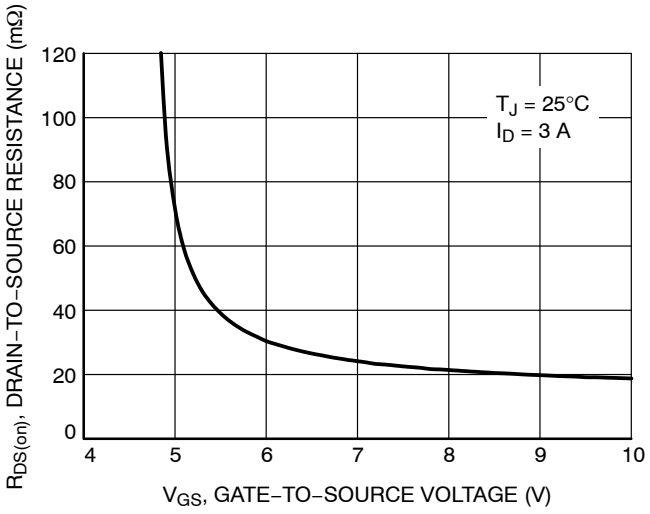

Figure 3. On−Resistance vs. Gate−to−Source Voltage

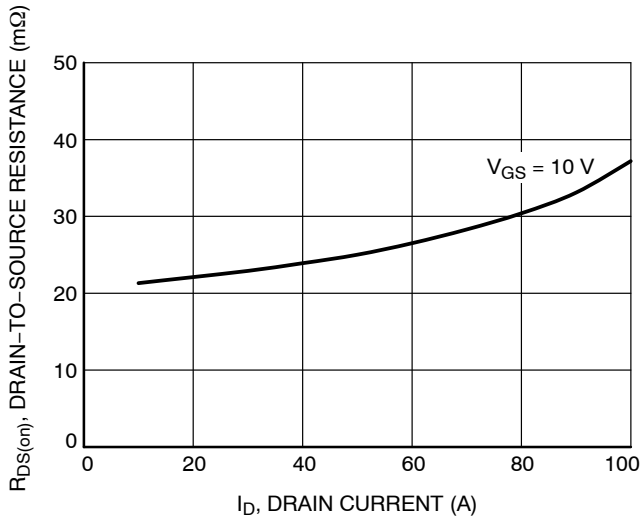

Figure 4. On−Resistance vs. Drain Current and Gate Voltage

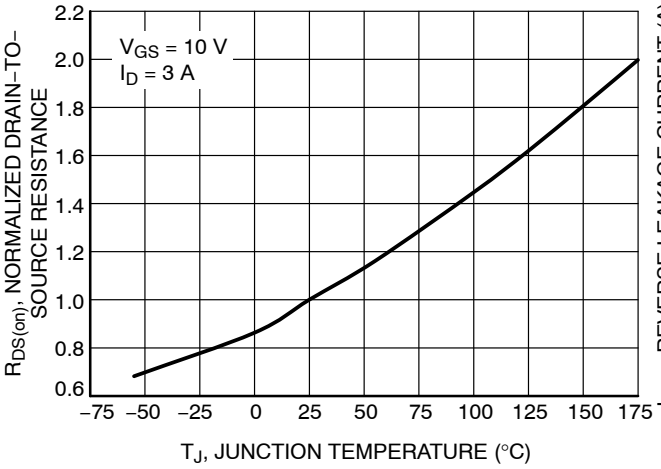

Figure 5. On−Resistance Variation with Temperature

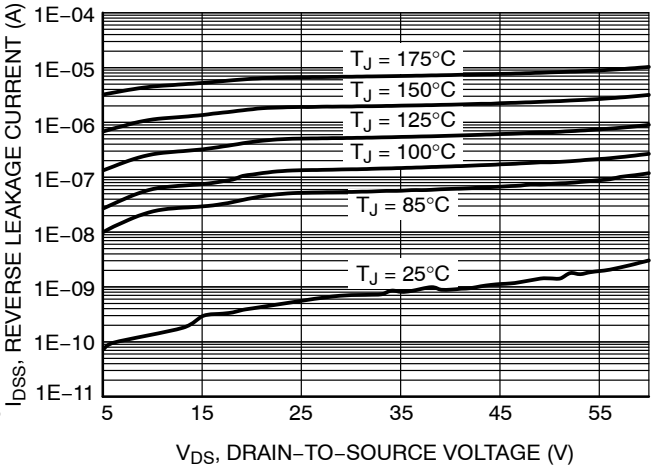

Figure 6. Drain−to−Source Leakage Current vs. Voltage

TYPICAL CHARACTERISTICS

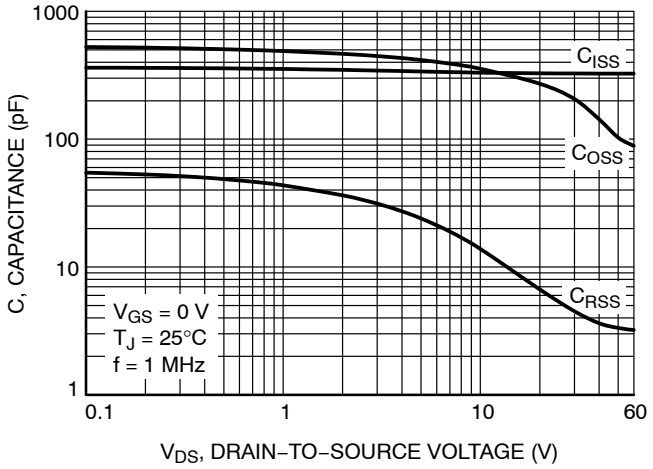

Figure 7. Capacitance Variation

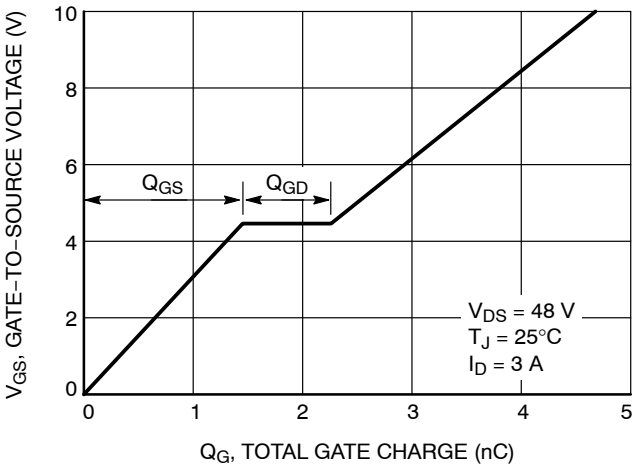

Figure 8. Gate−to−Source vs. Total Charge

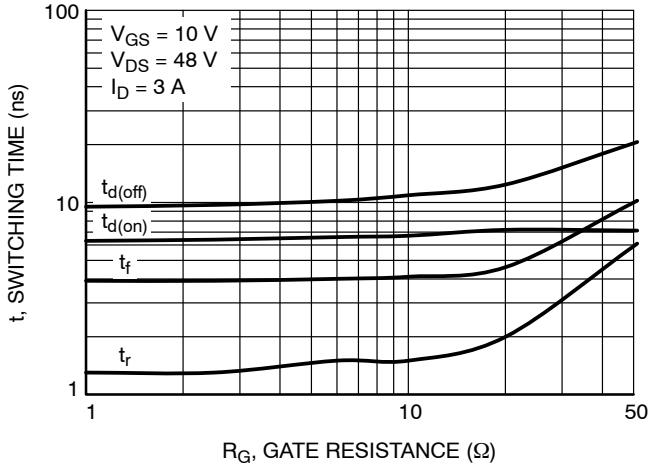

Figure 9. Resistive Switching Time Variation vs. Gate Resistance

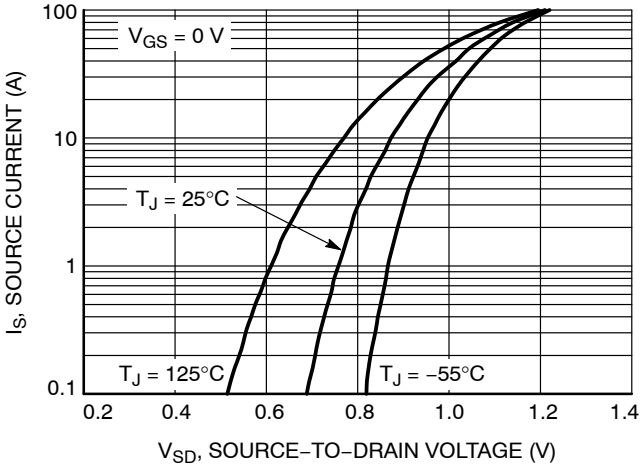

Figure 10. Diode Forward Voltage vs. Current

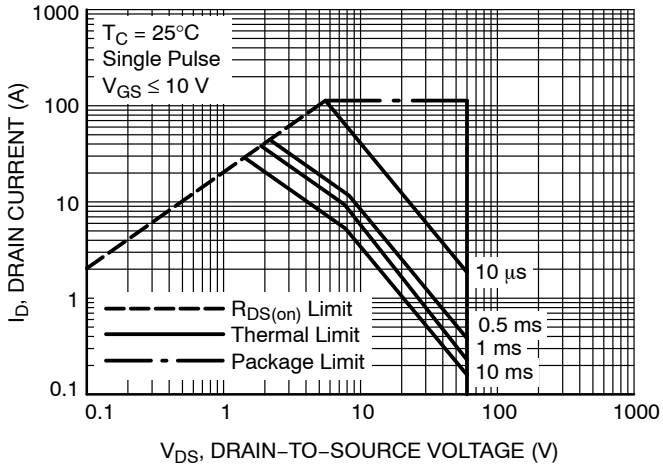

Figure 11. Maximum Rated Forward Biased Safe Operating Area

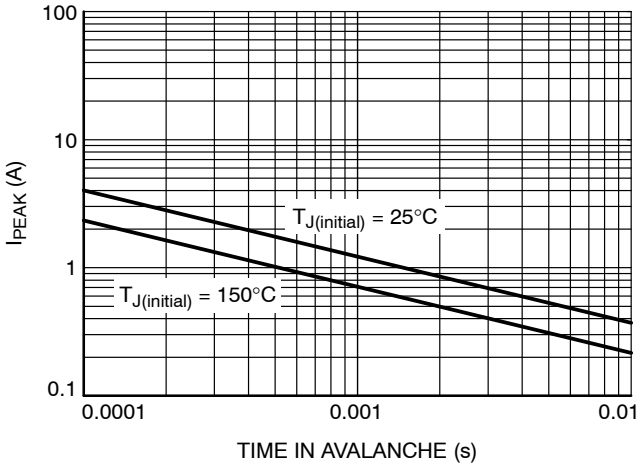

Figure 12. Maximum Drain Current vs. Time in Avalanche

TYPICAL CHARACTERISTICS

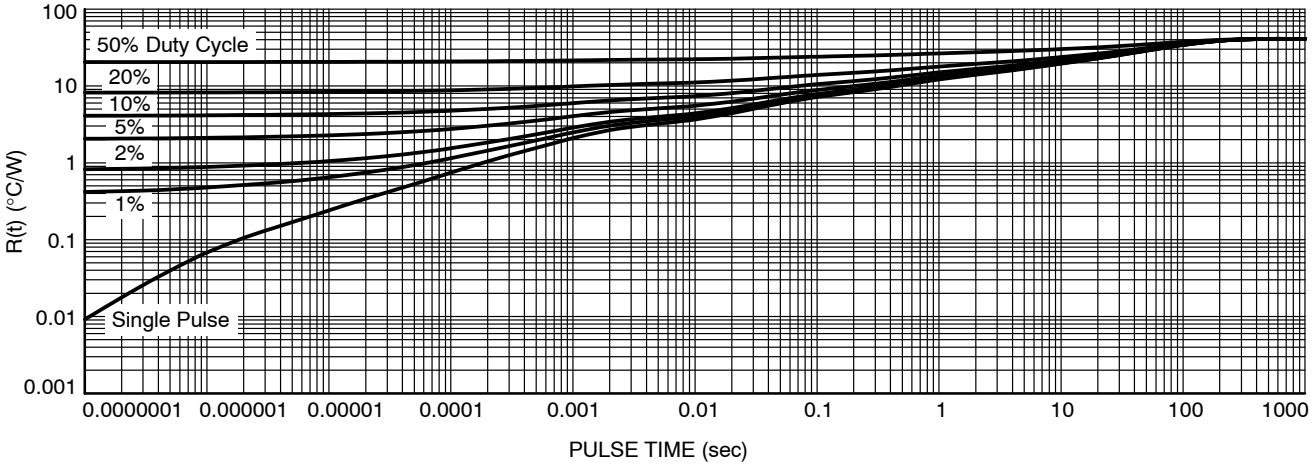

Figure 13. Transient Thermal Impedance

DEVICE ORDERING INFORMATION

Device	Marking	Package	Shipping†
NVMYS022N06CTWG	022N06C	LFPAK4 (Pb−Free)	3000 / Tape & Reel

†For information on tape and reel specifications, including part orientation and tape sizes, please refer to our Tape and Reel Packaging Specifications Brochure, BRD8011/D.

NVMYS022N06C

PACKAGE DIMENSIONS

LFPAK4 5x6
CASE 760AB
ISSUE B

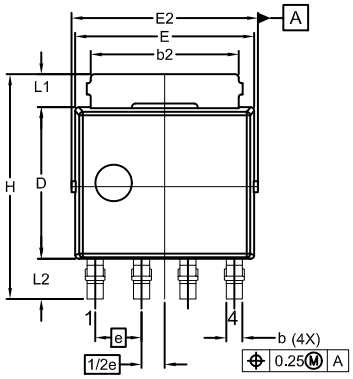

TOP VIEW

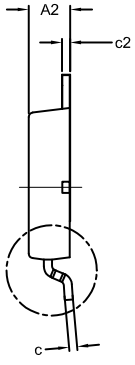

SIDE VIEW

NOTES:
1. DIMENSIONING AND TOLERANCING PER ASME Y14.5M, 1994.
2. CONTROLLING DIMENSION: MILLIMETERS.
3. DIMENSIONS D AND E DO NOT INCLUDE MOLD FLASH, PROTRUSIONS, OR BURRS. MOLD FLASH PROTRUSIONS OR GATE BURRS SHALL NOT EXCEED 0.150mm PER SIDE.
4. DIMENSIONS D AND E ARE DETERMINED AT THE OUTERMOST EXTREMES OF THE PLASTIC BODY.
5. DATUMS A AND B ARE DETERMINED AT DATUM PLANE H.

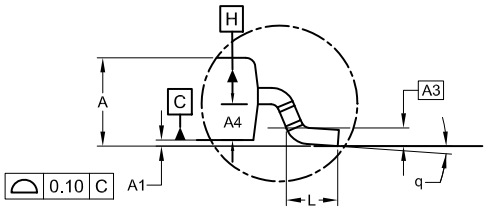

DETAIL 'A'
SCALE: 2:1

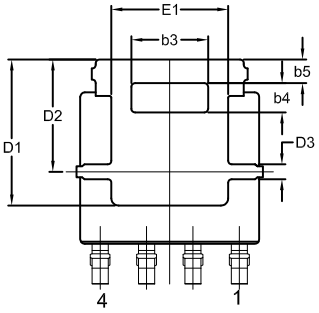

BOTTOM VIEW

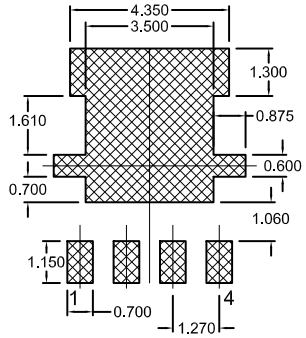

RECOMMENDED MOUNTING FOOTPRINT

UNIT IN MILLIMETER			
DIM	MIN	NOM	MAX
A	1.10	1.20	1.30
A1	0.00	0.08	0.15
A2	1.10	1.15	1.20
A3		0.25	
A4	0.45	0.50	0.55
b	0.40	0.45	0.50
b2	3.80	4.10	4.40
b3	2.00	2.10	2.20
b4	0.70	0.80	0.90
b5	0.55	0.65	0.75
c	0.19	0.22	0.25
c2	0.19	0.22	0.25
D	4.05	4.15	4.25
D1	3.80	4.00	4.20
D2	3.00	3.10	3.20
D3	0.30	0.40	0.50
E	4.80	4.90	5.00
E1	3.10	3.20	3.30
E2	5.00	5.15	5.30
e		1.27 BSC	
H	6.00	6.15	6.30
L	0.40	0.65	0.85
L1	0.80	0.90	1.00
L2	0.80	1.05	1.30
q	0°	4°	8°

onsemi, ONSEMI, and other names, marks, and brands are registered and/or common law trademarks of Semiconductor Components Industries, LLC dba "**onsemi**" or its affiliates and/or subsidiaries in the United States and/or other countries. **onsemi** owns the rights to a number of patents, trademarks, copyrights, trade secrets, and other intellectual property. A listing of **onsemi's** product/patent coverage may be accessed at www.onsemi.com/site/pdf/Patent-Marking.pdf. **onsemi** reserves the right to make changes at any time to any products or information herein, without notice. The information herein is provided "as-is" and **onsemi** makes no warranty, representation or guarantee regarding the accuracy of the information, product features, availability, functionality, or suitability of its products for any particular purpose, nor does **onsemi** assume any liability arising out of the application or use of any product or circuit, and specifically disclaims any and all liability, including without limitation special, consequential or incidental damages. Buyer is responsible for its products and applications using **onsemi** products, including compliance with all laws, regulations and safety requirements or standards, regardless of any support or applications information provided by **onsemi**. "Typical" parameters which may be provided in **onsemi** data sheets and/or specifications can and do vary in different applications and actual performance may vary over time. All operating parameters, including "Typicals" must be validated for each customer application by customer's technical experts. **onsemi** does not convey any license under any of its intellectual property rights nor the rights of others. **onsemi** products are not designed, intended, or authorized for use as a critical component in life support systems or any FDA Class 3 medical devices or medical devices with a same or similar classification in a foreign jurisdiction or any devices intended for implantation in the human body. Should Buyer purchase or use **onsemi** products for any such unintended or unauthorized application, Buyer shall indemnify and hold **onsemi** and its officers, employees, subsidiaries, affiliates, and distributors harmless against all claims, costs, damages, and expenses, and reasonable attorney fees arising out of, directly or indirectly, any claim of personal injury or death associated with such unintended or unauthorized use, even if such claim alleges that **onsemi** was negligent regarding the design or manufacture of the part. **onsemi** is an Equal Opportunity/Affirmative Action Employer. This literature is subject to all applicable copyright laws and is not for resale in any manner.

PUBLICATION ORDERING INFORMATION

LITERATURE FULFILLMENT:
Email Requests to: orderlit@onsemi.com

onsemi Website: www.onsemi.com

TECHNICAL SUPPORT
North American Technical Support:
Voice Mail: 1 800-282-9855 Toll Free USA/Canada
Phone: 011 421 33 790 2910

Europe, Middle East and Africa Technical Support:
Phone: 00421 33 790 2910
For additional information, please contact your local Sales Representative

◊

ENTEGRECİ

Bu belge www.entegreci.com üzerinden sunulmaktadır.

Elektronik komponent tedarikinde Entegreci

Entegreci, Eskişehir merkezli, Türkiye geneline satış yapan bir elektronik komponent mağazasıdır. Entegreler (IC), mikrodenetleyiciler, transistörler, diyotlar, pasif elemanlar, konnektörler, modüller ve geliştirme kartları tek adetten seri üretim adetlerine kadar satılır. Ürün sayfalarında güncel stok durumunu, fiyatı ve datasheet bağlantısını bulabilirsiniz.

Parça koduyla arama

Üretici parça numarasını yazın; stok ve fiyatı hemen görün.

www.entegreci.com

Ürün kategorileri

Entegreden kapasitöre tüm elektronik komponent kategorileri.

Kategorilere göz atın

Üreticiler

Aradığınız üreticinin ürünlerini tek sayfada inceleyin.

Üreticileri görün

Toplu alım ve teklif

Listede olmayan ya da yüksek adetli parçalar için teklif isteyin.

Teklif isteyin

www.entegreci.com | **destek@entegreci.com** | **0850 305 90 34**

Entegreci is an online electronic components store based in Türkiye. Search by manufacturer part number to see stock, prices and datasheets for integrated circuits, microcontrollers, transistors, passive components and connectors, or request a quote for parts that are not listed.

Bu sayfa Entegreci tarafından eklenmiştir. Belgenin önceki sayfaları asıl yayıncısına aittir ve içeriği değiştirilmemiştir; en güncel sürüm için belgenin yayıncısına başvurun.