Constant Current Regulator & LED Driver

50 V, 10 mA ± 30%, 460 mW Package

NSI50010YT1G

$I_{reg(SS)}$ = 10 mA
@ Vak = 7.5 V



SOD-123
CASE 425
STYLE 1

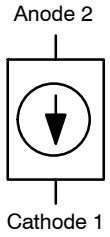

The linear constant current regulator (CCR) is a simple, economical and robust device designed to provide a cost-effective solution for regulating current in LEDs (similar to Constant Current Diode, CCD). The CCR is based on Self-Biased Transistor (SBT) technology and regulates current over a wide voltage range. It is designed with a negative temperature coefficient to protect LEDs from thermal runaway at extreme voltages and currents.

The CCR turns on immediately and is at 40% of regulation with only 0.5 V Vak. It requires no external components allowing it to be designed as a high or low-side regulator. The high anode-cathode voltage rating withstands surges common in Automotive, Industrial and Commercial Signage applications. The CCR comes in thermally robust packages and is qualified to AEC-Q101 standard, and UL94−V0 certified.

Features

- Robust Power Package: 460 mW
- Wide Operating Voltage Range
- Immediate Turn-On
- Voltage Surge Suppressing − Protecting LEDs
- UL94−V0 Certified
- SBT (Self-Biased Transistor) Technology
- Negative Temperature Coefficient
- NSV Prefix for Automotive and Other Applications Requiring Unique Site and Control Change Requirements; AEC−Q101 Qualified and PPAP Capable
- These Devices are Pb-Free, Halogen Free/BFR Free and are RoHS Compliant

Applications

- Automobile: Chevron Side Mirror Markers, Cluster, Display & Instrument Backlighting, CHMSL, Map Light
- AC Lighting Panels, Display Signage, Decorative Lighting, Channel Lettering
- Switch Contact Wetting
- Application Note AND8391/D − Power Dissipation Considerations
- Application Note AND8349/D − Automotive CHMSL

MARKING DIAGRAM

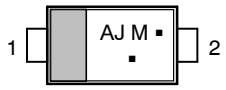

AJ = Device Code
M = Date Code
▪ = Pb-Free Package

(Note: Microdot may be in either location)

ORDERING INFORMATION

Device	Package	Shipping†
NSI50010YT1G	SOD-123 (Pb-Free)	3,000 / Tape & Reel
NSV50010YT1G	SOD-123 (Pb-Free)	3,000 / Tape & Reel

† For information on tape and reel specifications, including part orientation and tape sizes, please refer to our Tape and Reel Packaging Specification Brochure, BRD8011/D.

© Semiconductor Components Industries, LLC, 2014

MAXIMUM RATINGS (T_A = 25 °C unless otherwise noted)

Symbol	Rating	Value	Unit
Vak Max	Anode-Cathode Voltage	50	V
V_R	Reverse Voltage	500	mV
T_J, T_{stg}	Operating and Storage Junction Temperature Range	−55 to +150	°C
ESD	ESD Rating: Human Body Model Machine Model	Class 1C Class B	

Stresses exceeding those listed in the Maximum Ratings table may damage the device. If any of these limits are exceeded, device functionality should not be assumed, damage may occur and reliability may be affected.

ELECTRICAL CHARACTERISTICS (T_A = 25 °C unless otherwise noted)

Symbol	Characteristic	Min	Typ	Max	Unit
$I_{reg(SS)}$	Steady State Current @ Vak = 7.5 V (Note 1)	7.0	10	13	mA
$V_{overhead}$	Voltage Overhead (Note 2)		1.8		V
$I_{reg(P)}$	Pulse Current @ Vak = 7.5 V (Note 3)	7.1	10.5	13.8	mA
C	Capacitance @ Vak = 7.5 V (Note 4)		2.5		pF
C	Capacitance @ Vak = 0 V (Note 4)		5.7		pF

Product parametric performance is indicated in the Electrical Characteristics for the listed test conditions, unless otherwise noted. Product performance may not be indicated by the Electrical Characteristics if operated under different conditions.

1. $I_{reg(SS)}$ steady state is the voltage (Vak) applied for a time duration ≥ 10 sec, using FR−4 @ 300 mm^2 1 oz. Copper traces, in still air.
2. $V_{overhead} = V_{in} - V_{LEDs}$. $V_{overhead}$ is typical value for 80% $I_{reg(SS)}$.
3. $I_{reg(P)}$ non-repetitive pulse test. Pulse width t ≤ 300 μsec.
4. f = 1 MHz, 0.02 V RMS.

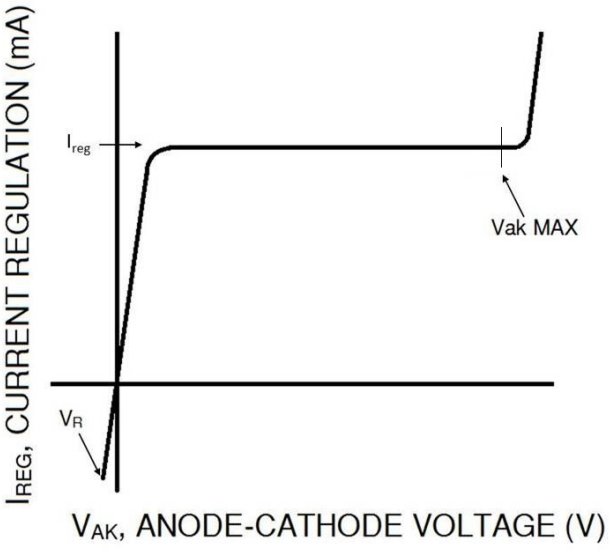

Figure 1. CCR Voltage-Current Characteristic

Share Feedback
Your Opinion Matters

THERMAL CHARACTERISTICS

Symbol	Characteristic	Max	Unit
P_D	Total Device Dissipation (Note 5) T_A = 25 °C Derate above 25 °C	208 1.66	mW mW/°C
$R_{\theta JA}$	Thermal Resistance, Junction-to-Ambient (Note 5)	600	°C/W
$R_{\psi LA}$	Thermal Reference, Lead-to-Ambient (Note 5)	404	°C/W
$R_{\psi JL}$	Thermal Reference, Junction-to-Cathode Lead (Note 5)	196	°C/W
P_D	Total Device Dissipation (Note 6) T_A = 25 °C Derate above 25 °C	227 1.8	mW mW/°C
$R_{\theta JA}$	Thermal Resistance, Junction-to-Ambient (Note 6)	550	°C/W
$R_{\psi LA}$	Thermal Reference, Lead-to-Ambient (Note 6)	390	°C/W
$R_{\psi JL}$	Thermal Reference, Junction-to-Cathode Lead (Note 6)	160	°C/W
P_D	Total Device Dissipation (Note 7) T_A = 25 °C Derate above 25 °C	347 2.8	mW mW/°C
$R_{\theta JA}$	Thermal Resistance, Junction-to-Ambient (Note 7)	360	°C/W
$R_{\psi LA}$	Thermal Reference, Lead-to-Ambient (Note 7)	200	°C/W
$R_{\psi JL}$	Thermal Reference, Junction-to-Cathode Lead (Note 7)	160	°C/W
P_D	Total Device Dissipation (Note 8) T_A = 25 °C Derate above 25 °C	368 2.9	mW mW/°C
$R_{\theta JA}$	Thermal Resistance, Junction-to-Ambient (Note 8)	340	°C/W
$R_{\psi LA}$	Thermal Reference, Lead-to-Ambient (Note 8)	208	°C/W
$R_{\psi JL}$	Thermal Reference, Junction-to-Cathode Lead (Note 8)	132	°C/W
P_D	Total Device Dissipation (Note 9) T_A = 25 °C Derate above 25 °C	436 3.5	mW mW/°C
$R_{\theta JA}$	Thermal Resistance, Junction-to-Ambient (Note 9)	287	°C/W
$R_{\psi LA}$	Thermal Reference, Lead-to-Ambient (Note 9)	139	°C/W
$R_{\psi JL}$	Thermal Reference, Junction-to-Cathode Lead (Note 9)	148	°C/W
P_D	Total Device Dissipation (Note 10) T_A = 25 °C Derate above 25 °C	463 3.7	mW mW/°C
$R_{\theta JA}$	Thermal Resistance, Junction-to-Ambient (Note 10)	270	°C/W
$R_{\psi LA}$	Thermal Reference, Lead-to-Ambient (Note 10)	150	°C/W
$R_{\psi JL}$	Thermal Reference, Junction-to-Cathode Lead (Note 10)	120	°C/W
T_J, T_{stg}	Junction and Storage Temperature Range	−55 to +150	°C

5. FR−4 @ 100 mm^2, 1 oz. copper traces, still air.
6. FR−4 @ 100 mm^2, 2 oz. copper traces, still air.
7. FR−4 @ 300 mm^2, 1 oz. copper traces, still air.
8. FR−4 @ 300 mm^2, 2 oz. copper traces, still air.
9. FR−4 @ 500 mm^2, 1 oz. copper traces, still air.
10. FR−4 @ 500 mm^2, 2 oz. copper traces, still air.

NOTE: Lead measurements are made by non-contact methods such as IR with treated surface to increase emissivity to 0.9.
Lead temperature measurement by attaching a T/C may yield values as high as 30% higher °C/W values based upon empirical measurements and method of attachment.

Share Feedback
Your Opinion Matters

TYPICAL PERFORMANCE CURVES

MINIMUM FR−4 @ 300 MM^2 1 OZ COPPER TRACE, STILL AIR

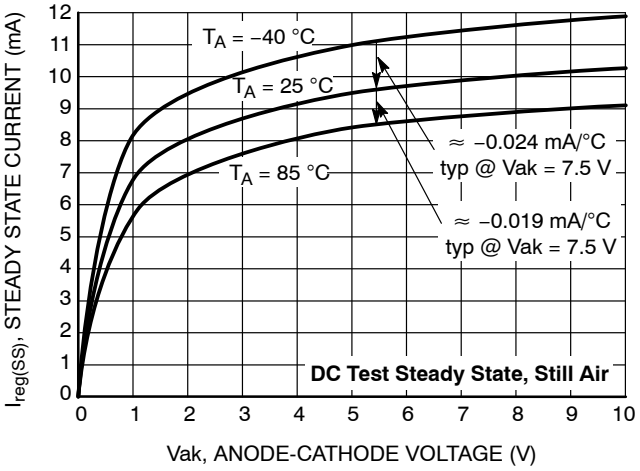

Figure 2. Steady State Current ($I_{reg(SS)}$) vs. Anode-Cathode Voltage (Vak)

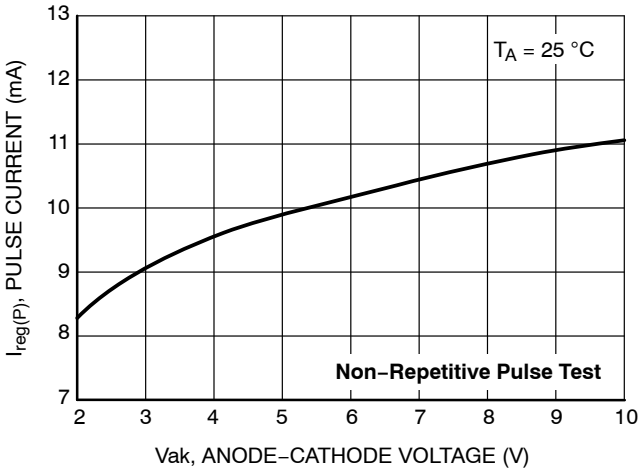

Figure 3. Pulse Current ($I_{reg(P)}$) vs. Anode-Cathode Voltage (Vak)

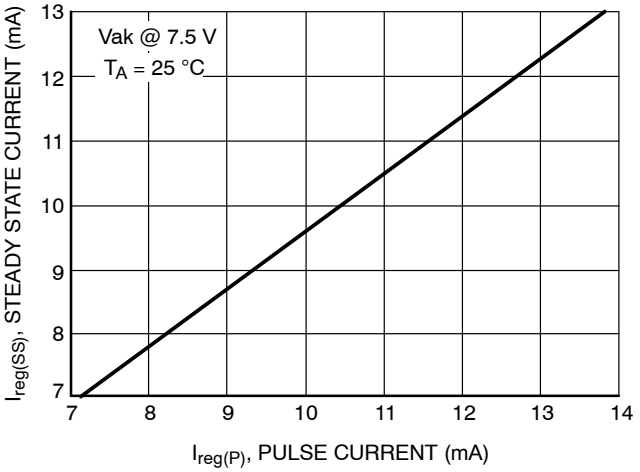

Figure 4. Steady State Current vs. Pulse Current Testing

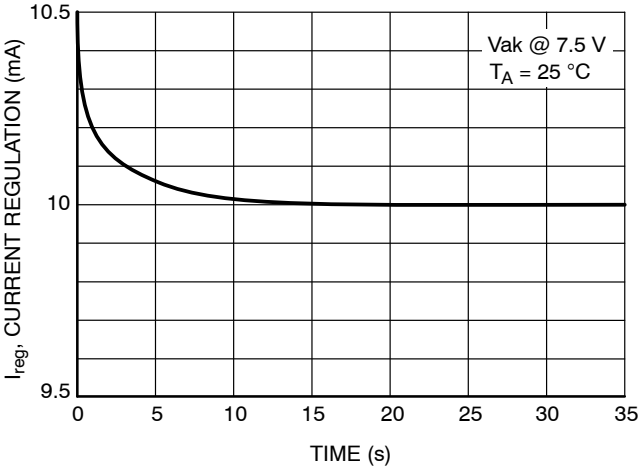

Figure 5. Current Regulation vs. Time

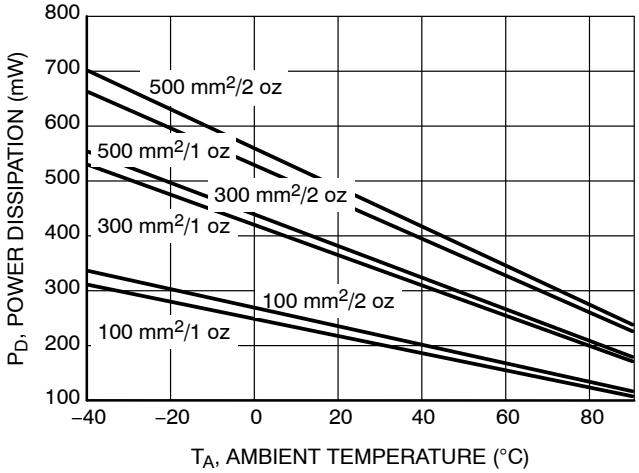

Figure 6. Power Dissipation vs. Ambient Temperature @ T_J = 150 °C

Share Feedback
Your Opinion Matters

APPLICATIONS INFORMATION

The CCR is a self biased transistor designed to regulate the current through itself and any devices in series with it. The device has a slight negative temperature coefficient, as shown in Figure 2 – Tri Temp. (i.e. if the temperature increases the current will decrease). This negative temperature coefficient will protect the LEDS by reducing the current as temperature rises.

The CCR turns on immediately and is typically at 20% of regulation with only 0.5 V across it.

The device is capable of handling voltage for short durations of up to 50 V so long as the die temperature does not exceed 150 °C. The determination will depend on the thermal pad it is mounted on, the ambient temperature, the pulse duration, pulse shape and repetition.

Single LED String

The CCR can be placed in series with LEDs as a High Side or a Low Side Driver. The number of the LEDs can vary from one to an unlimited number. The designer needs to calculate the maximum voltage across the CCR by taking the maximum input voltage less the voltage across the LED string (Figures 7 and 8).

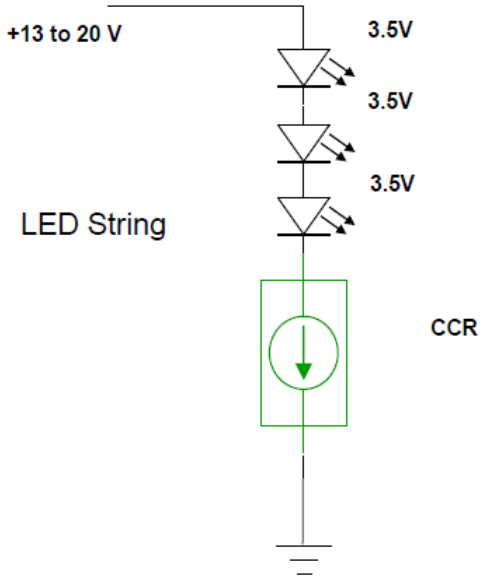

Figure 7.

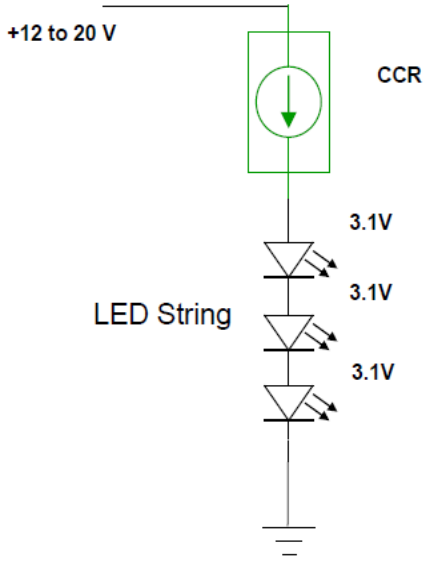

Figure 8.

Higher Current LED Strings

Two or more fixed current CCRs can be connected in parallel. The current through them is additive (Figure 9).

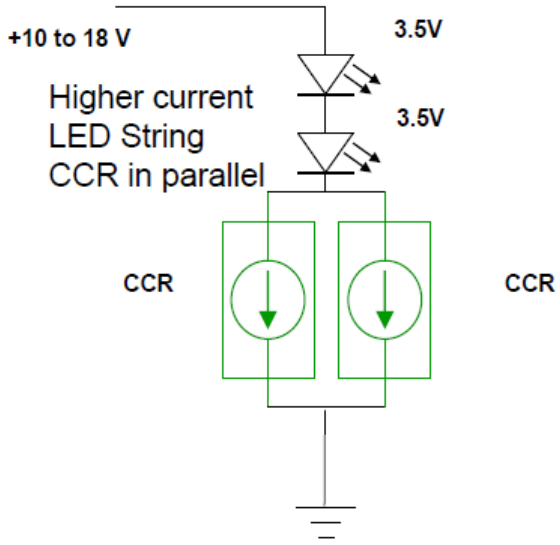

Figure 9.

Share Feedback
Your Opinion Matters

Other Currents

The adjustable CCR can be placed in parallel with any other CCR to obtain a desired current. The adjustable CCR provides the ability to adjust the current as LED efficiency increases to obtain the same light output (Figure 10).

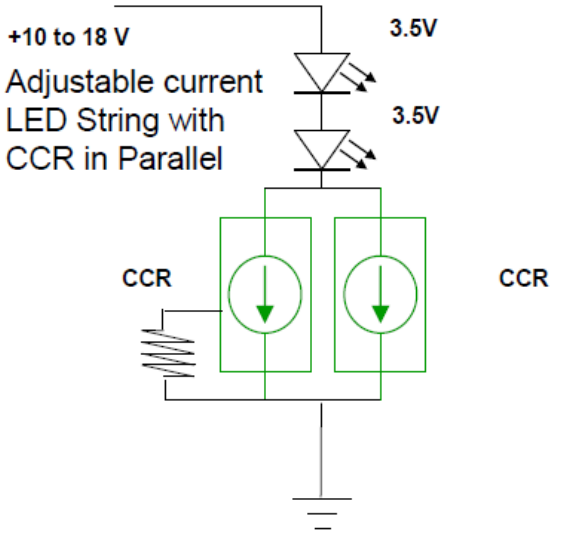

Figure 10.

Dimming using PWM

The dimming of an LED string can be easily achieved by placing a BJT in series with the CCR (Figure 11).

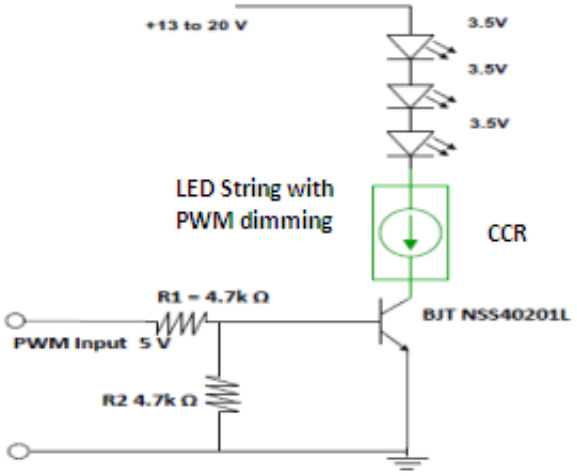

Figure 11.

The method of pulsing the current through the LEDs is known as Pulse Width Modulation (PWM) and has become the preferred method of changing the light level. LEDs being a silicon device, turn on and off rapidly in response to the current through them being turned on and off. The switching time is in the order of 100 nanoseconds, this equates to a maximum frequency of 10 Mhz, and applications will typically operate from a 100 Hz to 100 kHz. Below 100 Hz the human eye will detect a flicker from the light emitted from the LEDs. Between 500 Hz and 20 kHz the circuit may generate audible sound. Dimming is achieved by turning the LEDs on and off for a portion of a single cycle. This on/off cycle is called the Duty cycle (D) and is expressed by the amount of time the LEDs are on (Ton) divided by the total time of an on/off cycle (Ts) (Figure 12).

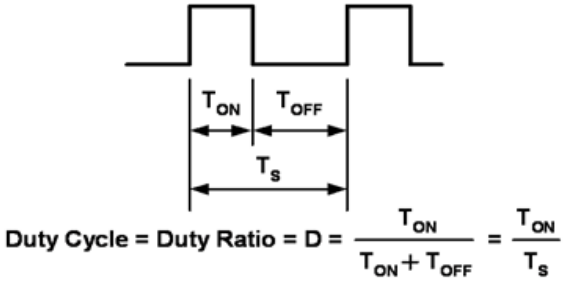

Figure 12.

The current through the LEDs is constant during the period they are turned on resulting in the light being consistent with no shift in chromaticity (color). The brightness is in proportion to the percentage of time that the LEDs are turned on.

Figure 13 is a typical response of Luminance vs Duty Cycle.

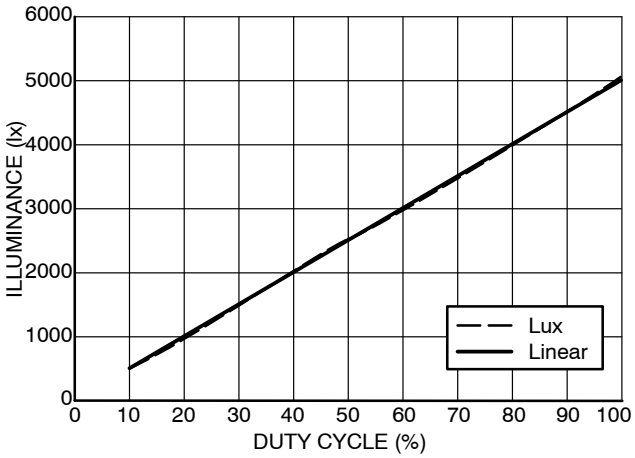

Figure 13. Luminous Emmitance vs. Duty Cycle

Reducing EMI

Designers creating circuits switching medium to high currents need to be concerned about Electromagnetic Interference (EMI). The LEDs and the CCR switch extremely fast, less than 100 nanoseconds. To help eliminate EMI, a capacitor can be added to the circuit across R2. (Figure 11) This will cause the slope on the rising and falling edge on the current through the circuit to be extended. The slope of the CCR on/off current can be controlled by the values of R1 and C1.

The selected delay / slope will impact the frequency that is selected to operate the dimming circuit. The longer the delay, the lower the frequency will be. The delay time should not be less than a 10:1 ratio of the minimum on time. The frequency is also impacted by the resolution and dimming

Share Feedback
Your Opinion Matters

steps that are required. With a delay of 1.5 microseconds on the rise and the fall edges, the minimum on time would be 30 microseconds. If the design called for a resolution of 100 dimming steps, then a total duty cycle time (Ts) of 3 milliseconds or a frequency of 333 Hz will be required.

Thermal Considerations

As power in the CCR increases, it might become necessary to provide some thermal relief. The maximum power dissipation supported by the device is dependent upon board design and layout. Mounting pad configuration on the PCB, the board material, and the ambient temperature affect the rate of junction temperature rise for the part. When the device has good thermal conductivity through the PCB, the junction temperature will be relatively low with high power applications. The maximum dissipation the device can handle is given by:

$$P_{D(MAX)} = \frac{T_{J(MAX)} - T_A}{R_{\theta JA}}$$

Referring to the thermal table on page 2 the appropriate $R_{\theta JA}$ for the circuit board can be selected.

AC Applications

The CCR is a DC device; however, it can be used with full wave rectified AC as shown in application notes AND8433/D and AND8492/D and design notes DN05013/D and DN06065/D. Figure 14 shows the basic circuit configuration.

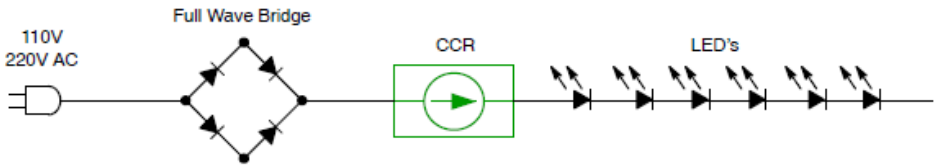

Figure 14. Basic AC Application

Share Feedback
Your Opinion Matters

REVISION HISTORY

Revision	Description of Changes	Date
3	Rebranded the Data Sheet to **onsemi** format.	9/08/2025

This document has undergone updates prior to the inclusion of this revision history table. The changes tracked here only reflect updates made on the noted approval dates.

Share Feedback
Your Opinion Matters

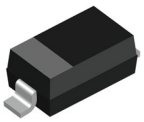

SOD−123 2−LEAD, 1.60x2.69x1.16
CASE 425
ISSUE H

DATE 29 FEB 2024

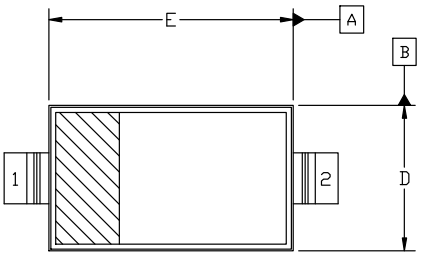

TOP VIEW

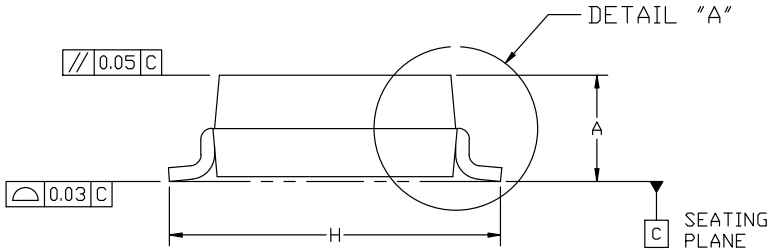

SIDE VIEW

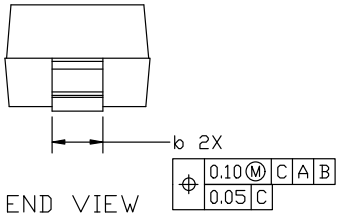

END VIEW

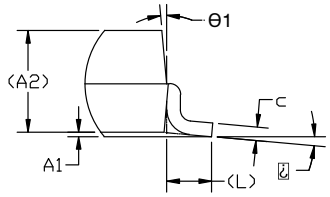

DETAIL "A"

NOTES:
1. DIMENSION AND TOLERANCING PER ASME Y14.5M, 2018
2. CONTROLLING DIMENSION: MILLIMETERS

	MILLIMETER		
DIM	MIN.	NOM.	MAX.
A	0.94	1.17	1.35
A1	0.00	0.05	0.10
A2		1.16 REF.	
b	0.51	0.61	0.71
c	–	–	0.15
D	1.40	1.60	1.80
E	2.54	2.69	2.84
H	3.56	3.68	3.86
L		0.25 REF.	
∠	0°		10°
θ1	0°		10°

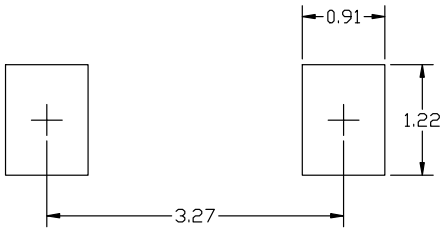

RECOMMENDED MOUNTING FOOTPRINT

*For additional information on or Pb-Free strategy and soldering details, please download the ON Semiconductor Soldering and Mounting Techniques Reference manual SOLDERRM/D.

GENERIC MARKING DIAGRAM*



XXX = Specific Device Code
M = Date Code
▪ = Pb−Free Package
(Note: Microdot may be in either location)

*This information is generic. Please refer to device data sheet for actual part marking. Pb−Free indicator, "G" or microdot "▪", may or may not be present. Some products may not follow the Generic Marking.

STYLE 1:
PIN 1. CATHODE
2. ANODE

DOCUMENT NUMBER:	**98ASB42927B**	Electronic versions are uncontrolled except when accessed directly from the Document Repository. Printed versions are uncontrolled except when stamped "CONTROLLED COPY" in red.
DESCRIPTION:	**SOD−123 2−LEAD, 1.60x2.69x1.16**	**PAGE 1 OF 1**

onsemi and ONSEMI are trademarks of Semiconductor Components Industries, LLC dba **onsemi** or its subsidiaries in the United States and/or other countries. **onsemi** reserves the right to make changes without further notice to any products herein. **onsemi** makes no warranty, representation or guarantee regarding the suitability of its products for any particular purpose, nor does **onsemi** assume any liability arising out of the application or use of any product or circuit, and specifically disclaims any and all liability, including without limitation special, consequential or incidental damages. **onsemi** does not convey any license under its patent rights nor the rights of others.

onsemi, , and other names, marks, and brands are registered and/or common law trademarks of Semiconductor Components Industries, LLC dba "**onsemi**" or its affiliates and/or subsidiaries in the United States and/or other countries. **onsemi** owns the rights to a number of patents, trademarks, copyrights, trade secrets, and other intellectual property. A listing of **onsemi**'s product/patent coverage may be accessed at www.onsemi.com/site/pdf/Patent−Marking.pdf. **onsemi** reserves the right to make changes at any time to any products or information herein, without notice. The information herein is provided "as−is" and **onsemi** makes no warranty, representation or guarantee regarding the accuracy of the information, product features, availability, functionality, or suitability of its products for any particular purpose, nor does **onsemi** assume any liability arising out of the application or use of any product or circuit, and specifically disclaims any and all liability, including without limitation special, consequential or incidental damages. Buyer is responsible for its products and applications using **onsemi** products, including compliance with all laws, regulations and safety requirements or standards, regardless of any support or applications information provided by **onsemi**. "Typical" parameters which may be provided in **onsemi** data sheets and/or specifications can and do vary in different applications and actual performance may vary over time. All operating parameters, including "Typicals" must be validated for each customer application by customer's technical experts. **onsemi** does not convey any license under any of its intellectual property rights nor the rights of others. **onsemi** products are not designed, intended, or authorized for use as a critical component in life support systems or any FDA Class 3 medical devices or medical devices with a same or similar classification in a foreign jurisdiction or any devices intended for implantation in the human body. Should Buyer purchase or use **onsemi** products for any such unintended or unauthorized application, Buyer shall indemnify and hold **onsemi** and its officers, employees, subsidiaries, affiliates, and distributors harmless against all claims, costs, damages, and expenses, and reasonable attorney fees arising out of, directly or indirectly, any claim of personal injury or death associated with such unintended or unauthorized use, even if such claim alleges that **onsemi** was negligent regarding the design or manufacture of the part. **onsemi** is an Equal Opportunity/Affirmative Action Employer. This literature is subject to all applicable copyright laws and is not for resale in any manner.

ADDITIONAL INFORMATION

TECHNICAL PUBLICATIONS:
Technical Library: www.onsemi.com/design/resources/technical−documentation
onsemi Website: www.onsemi.com

ONLINE SUPPORT: www.onsemi.com/support
For additional information, please contact your local Sales Representative at www.onsemi.com/support/sales

ENTEGRECİ

Bu belge www.entegreci.com üzerinden sunulmaktadır.

Elektronik komponent tedarikinde Entegreci

Entegreci, Eskişehir merkezli, Türkiye geneline satış yapan bir elektronik komponent mağazasıdır. Entegreler (IC), mikrodenetleyiciler, transistörler, diyotlar, pasif elemanlar, konnektörler, modüller ve geliştirme kartları tek adetten seri üretim adetlerine kadar satılır. Ürün sayfalarında güncel stok durumunu, fiyatı ve datasheet bağlantısını bulabilirsiniz.

Parça koduyla arama

Üretici parça numarasını yazın; stok ve fiyatı hemen görün.

www.entegreci.com

Ürün kategorileri

Entegreden kapasitöre tüm elektronik komponent kategorileri.

Kategorilere göz atın

Üreticiler

Aradığınız üreticinin ürünlerini tek sayfada inceleyin.

Üreticileri görün

Toplu alım ve teklif

Listede olmayan ya da yüksek adetli parçalar için teklif isteyin.

Teklif isteyin

www.entegreci.com | **destek@entegreci.com** | **0850 305 90 34**

Entegreci is an online electronic components store based in Türkiye. Search by manufacturer part number to see stock, prices and datasheets for integrated circuits, microcontrollers, transistors, passive components and connectors, or request a quote for parts that are not listed.

Bu sayfa Entegreci tarafından eklenmiştir. Belgenin önceki sayfaları asıl yayıncısına aittir ve içeriği değiştirilmemiştir; en güncel sürüm için belgenin yayıncısına başvurun.