Synchronous Rectifier Controller

NCP4308

The NCP4308 is a synchronous rectifier controller for switch mode power supplies. The controller enables high efficiency designs for flyback, quasi resonant flyback and LLC topologies.

Externally adjustable minimum off-time and on-time blanking periods provides flexibility to drive various MOSFET package types and PCB layout. A reliable and noise less operation of the SR system is insured due to the Self Synchronization feature. The NCP4308 also utilizes Kelvin connection of the driver to the MOSFET to achieve high efficiency operation at full load.

The precise turn-off threshold, extremely low turn-off delay time and high sink current capability of the driver allow the maximum synchronous rectification MOSFET conduction time. The high accuracy driver and 5 V gate clamp make it ideally suited for directly driving GaN devices.

Features

- Self-Contained Control of Synchronous Rectifier in CCM, DCM and QR for Flyback or LLC Applications
- Precise True Secondary Zero Current Detection
- Rugged Current Sense Pin (up to 150 V)
- Adjustable Minimum ON-Time
- Adjustable Minimum OFF-Time with Ringing Detection
- Adjustable Maximum ON-Time for CCM Controlling of Primary QR Controller
- Improved Robust Self Synchronization Capability
- 8 A / 4 A Peak Current Sink / Source Drive Capability
- Operating Voltage Range up to V_{CC} = 35 V
- GaN Transistor Driving Capability (options A and C)
- Low Startup Current Consumption
- Maximum Operation Frequency up to 1 MHz
- SOIC-8, DFN-8 (4x4) and WDFN8 (2x2) Packages
- These are Pb-Free Devices

Typical Applications

- Notebook Adapters
- High Power Density AC/DC Power Supplies (Cell Phone Chargers)
- LCD TVs
- All SMPS with High Efficiency Requirements



SOIC-8
D SUFFIX
CASE 751

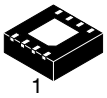

DFN8
MN SUFFIX
CASE 488AF



WDFN8
MT SUFFIX
CASE 511AT

MARKING DIAGRAMS

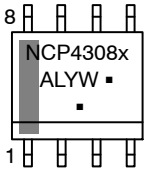

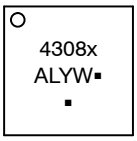

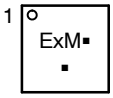

4308x	= Specific Device Code x = A, B, C, D or Q
Ex	= Specific Device Code x = A or D
A	= Assembly Location
L	= Wafer Lot
Y	= Year
W	= Work Week
M	= Date Code
▪	= Pb-Free Package

(Note: Microdot may be in either location)

ORDERING INFORMATION

See detailed ordering and shipping information on page 26 of this data sheet.

NOTE: Some of the devices on this data sheet have been **DISCONTINUED**. Please refer to the table on page 26.

© Semiconductor Components Industries, LLC, 2016

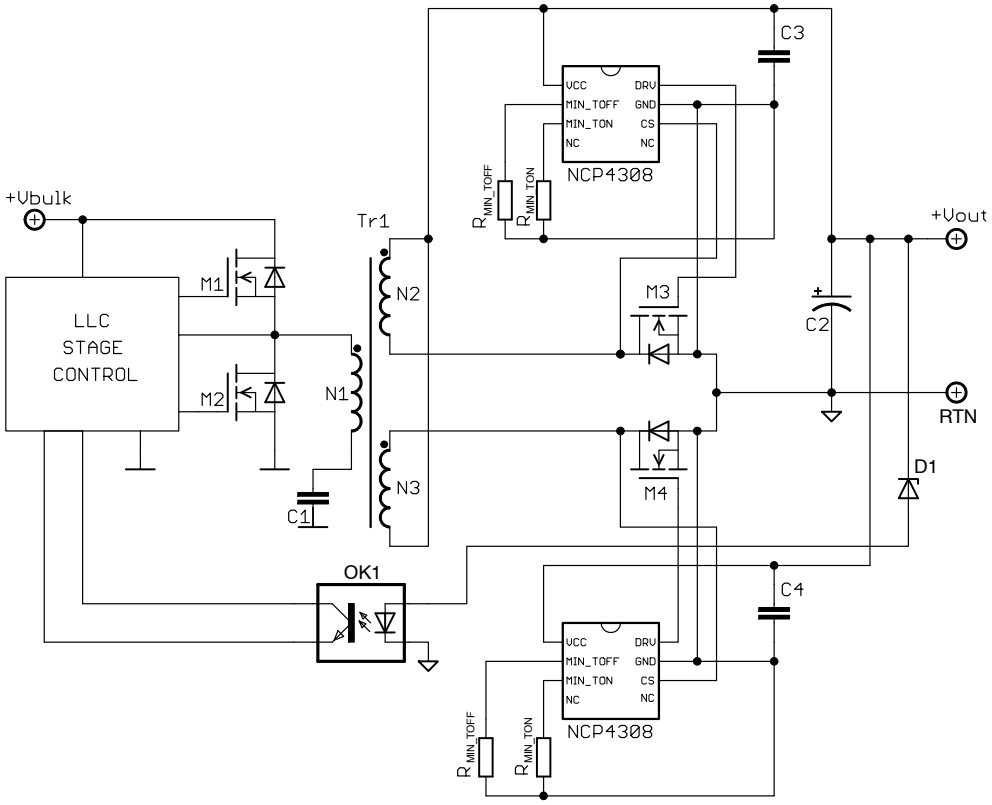

Figure 1. Typical Application Example − LLC Converter

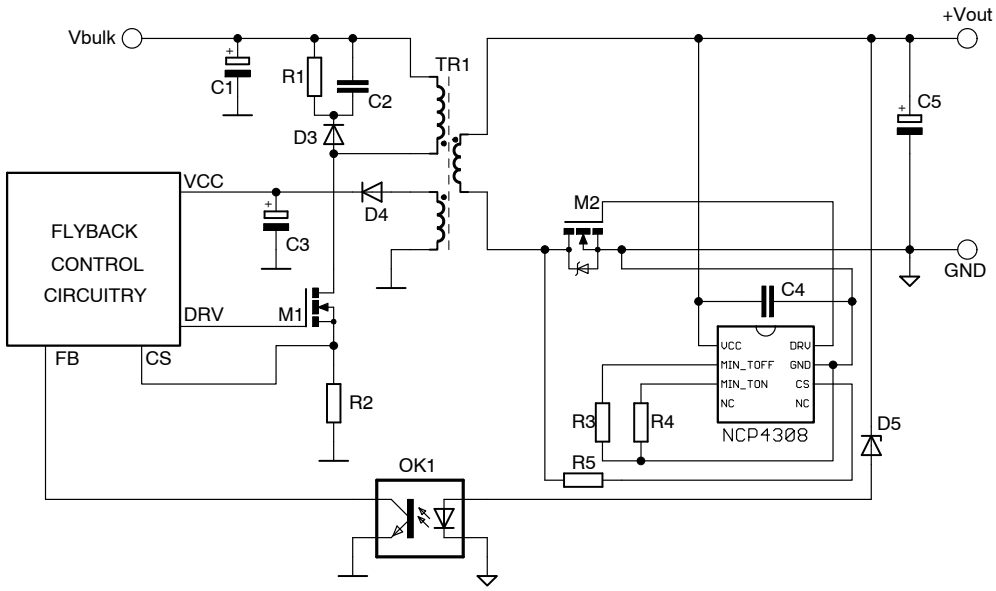

Figure 2. Typical Application Example − DCM, CCM or QR Flyback Converter

Share Feedback
Your Opinion Matters

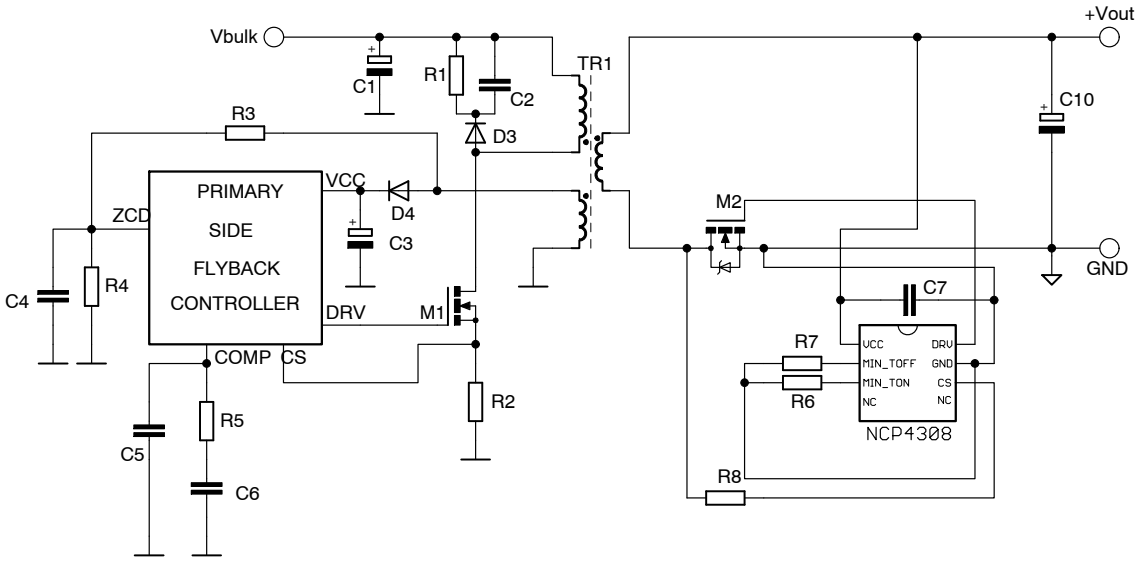

Figure 3. Typical Application Example – Primary Side Flyback Converter

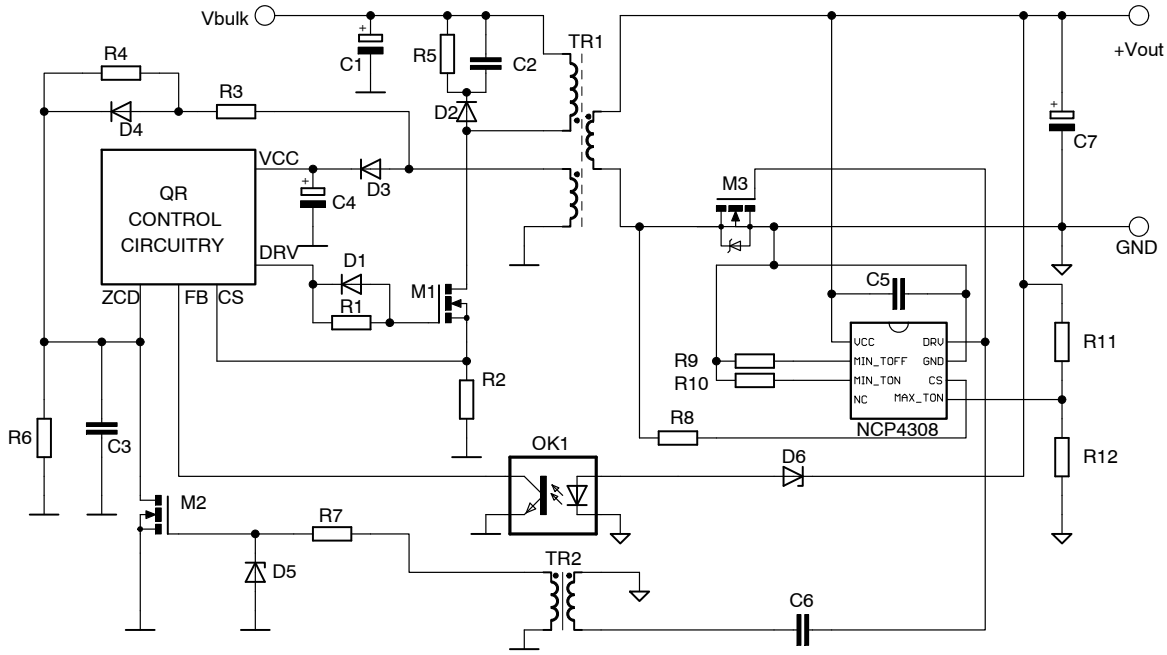

Figure 4. Typical Application Example – QR Converter – Capability to Force Primary into CCM Under Heavy Loads utilizing MAX-TON

Share Feedback
Your Opinion Matters

PIN FUNCTION DESCRIPTION

ver. A, B, C, D	ver. Q	Pin Name	Description
1	1	VCC	Supply voltage pin
2	2	MIN_TOFF	Adjust the minimum off time period by connecting resistor to ground.
3	3	MIN_TON	Adjust the minimum on time period by connecting resistor to ground.
4	4	NC	Leave this pin opened or tie it to ground.
5	–	NC	Leave this pin opened or tie it to ground.
6	6	CS	Current sense pin detects if the current flows through the SR MOSFET and/or its body diode. Basic turn-off detection threshold is 0 mV. A resistor in series with this pin can decrease the turn off threshold if needed.
7	7	GND	Ground connection for the SR MOSFET driver, V_{CC} decoupling capacitor and for minimum on and off time adjust resistors. GND pin should be wired directly to the SR MOSFET source terminal/soldering point using Kelvin connection. DFN8 exposed flag should be connected to GND
8	8	DRV	Driver output for the SR MOSFET
–	5	MAX_TON	Adjust the maximum on time period by connecting resistor to ground.

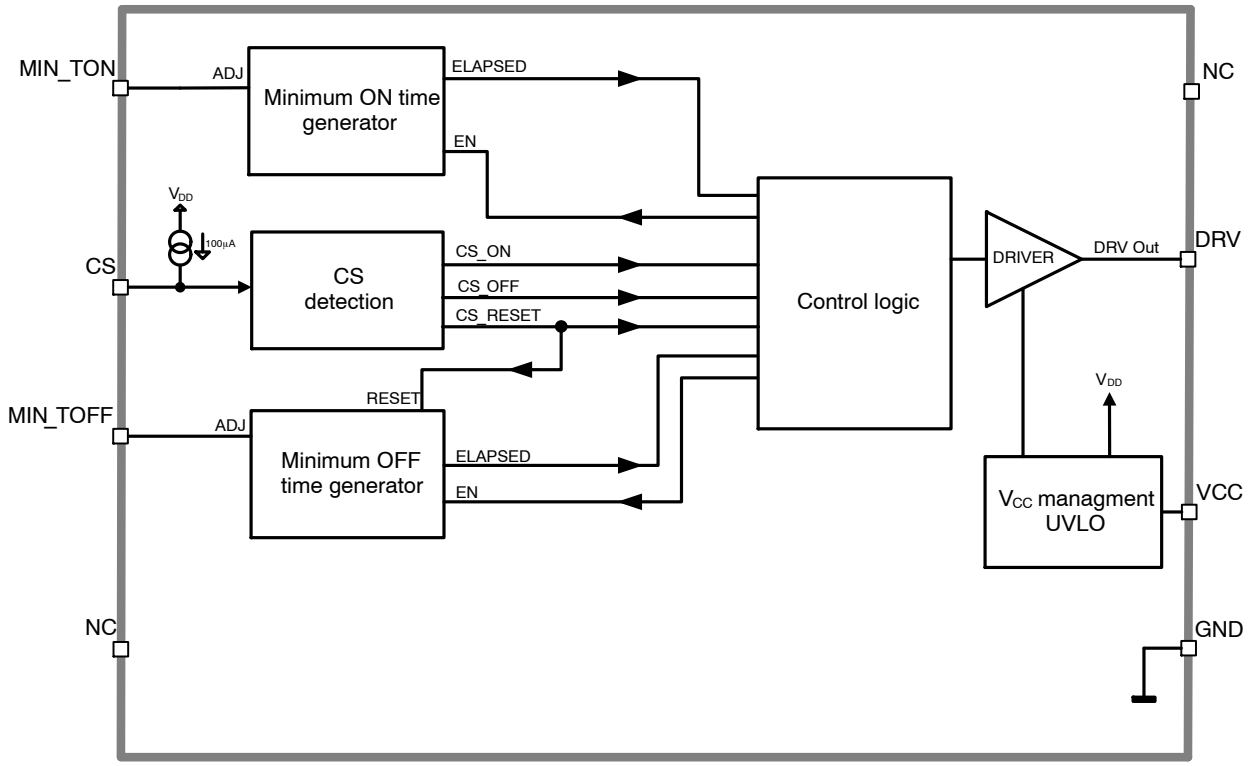

Figure 5. Internal Circuit Architecture – NCP4308A, B, C, D

Share Feedback
Your Opinion Matters

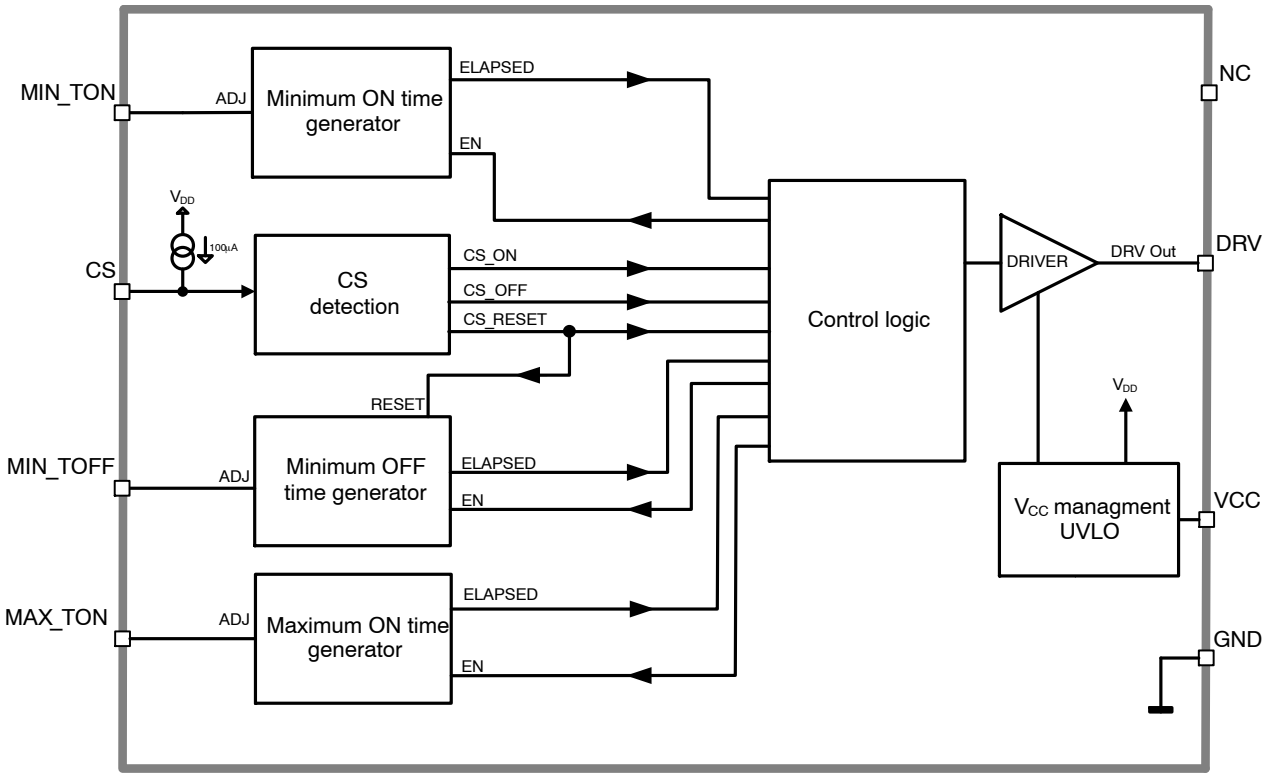

Figure 6. Internal Circuit Architecture – NCP4308Q (CCM QR) with MAX_TON

Share Feedback
Your Opinion Matters

ABSOLUTE MAXIMUM RATINGS

Rating	Symbol	Value	Unit
Supply Voltage	V_{CC}	−0.3 to 37.0	V
MIN_TON, MIN_TOFF, MAX_TON Input Voltage	V_{MIN_TON}, V_{MIN_TOFF}, V_{MAX_TON}	−0.3 to V_{CC}	V
Driver Output Voltage	V_{DRV}	−0.3 to 17.0	V
Current Sense Input Voltage	V_{CS}	−4 to 150	V
Current Sense Dynamic Input Voltage (t_{PW} = 200 ns)	V_{CS_DYN}	−10 to 150	V
MIN_TON, MIN_TOFF, MAX_TON, Input Current	I_{MIN_TON}, I_{MIN_TOFF}, I_{MAX_TON}	−10 to 10	mA
Junction to Air Thermal Resistance, 1 oz 1 in^2 Copper Area, SOIC8	$R_{\theta J\text{-}A_SOIC8}$	160	°C/W
Junction to Air Thermal Resistance, 1 oz 1 in^2 Copper Area, DFN8	$R_{\theta J\text{-}A_DFN8}$	80	°C/W
Junction to Air Thermal Resistance, 1 oz 1 in^2 Copper Area, WDFN8	$R_{\theta J\text{-}A_WDFN8}$	160	°C/W
Maximum Junction Temperature	T_{JMAX}	150	°C
Storage Temperature	T_{STG}	−60 to 150	°C
ESD Capability, Human Body Model, Except Pin 6, per JESD22-A114E	ESD_{HBM}	2000	V
ESD Capability, Human Body Model, Pin 6, per JESD22-A114E	ESD_{HBM}	1000	V
ESD Capability, Machine Model, per JESD22-A115-A	ESD_{MM}	200	V
ESD Capability, Charged Device Model, Except Pin 6, per JESD22-C101F	ESD_{CDM}	750	V
ESD Capability, Charged Device Model, Pin 6, per JESD22-C101F	ESD_{CDM}	250	V

Stresses exceeding those listed in the Maximum Ratings table may damage the device. If any of these limits are exceeded, device functionality should not be assumed, damage may occur and reliability may be affected.

1. This device meets latch-up tests defined by JEDEC Standard JESD78D Class I.

RECOMMENDED OPERATING CONDITIONS

Parameter	Symbol	Min	Max	Unit
Maximum Operating Input Voltage	V_{CC}		35	V
Operating Junction Temperature	T_J	−40	125	°C

Functional operation above the stresses listed in the Recommended Operating Ranges is not implied. Extended exposure to stresses beyond the Recommended Operating Ranges limits may affect device reliability.

Share Feedback
Your Opinion Matters

ELECTRICAL CHARACTERISTICS $-40\ °C \le T_J \le 125\ °C$; V_{CC} = 12 V; C_{DRV} = 0 nF; $R_{MIN_TON} = R_{MIN_TOFF}$ = 10 kΩ; V_{CS} = −1 to +4 V; f_{CS} = 100 kHz, DC_{CS} = 50%, unless otherwise noted. Typical values are at T_J = +25 °C

Parameter	Test Conditions		Symbol	Min	Typ	Max	Unit
SUPPLY SECTION							
VCC UVLO (ver. B & C)	V_{CC} rising, V_{CS} = 0 V		V_{CCON}	8.3	8.8	9.4	V
	V_{CC} falling, V_{CS} = 0 V		V_{CCOFF}	7.3	7.8	8.3	
VCC UVLO Hysteresis (ver. B & C)			V_{CCHYS}		1.0		V
VCC UVLO (ver. A, D & Q)	V_{CC} rising, V_{CS} = 0 V		V_{CCON}	4.20	4.45	4.80	V
	V_{CC} falling, V_{CS} = 0 V		V_{CCOFF}	3.70	3.95	4.20	
VCC UVLO Hysteresis (ver. A, D & Q)			V_{CCHYS}		0.5		V
Start-up Delay	V_{CC} rising from 0 to V_{CCON} + 1 V @ tr = 10 µs, V_{CS} = 0 V		t_{START_DEL}		75	125	µs
Current Consumption, $R_{MIN_TON} = R_{MIN_TOFF}$ = 0 kΩ	C_{DRV} = 0 nF, f_{CS} = 500 kHz	A, C	I_{CC}	3.0	4.0	5.6	mA
		B, D, Q		3.5	4.5	6.0	
	C_{DRV} = 1 nF, f_{CS} = 500 kHz	A, C		4.5	6.0	7.5	
		B, D, Q		7.7	9.0	10.7	
	C_{DRV} = 10 nF, f_{CS} = 500 kHz	A, C		20	25	30	
		B, D, Q		40	50	60	
Current Consumption	No switching, V_{CS} = 0 V, $R_{MIN_TON} = R_{MIN_TOFF}$ = 0 kΩ		I_{CC}	1.5	2.0	2.5	mA
	No switching, V_{CS} = 0 V, $R_{MIN_TON} = R_{MIN_TOFF}$ = 0 kΩ, DFN8, WDFN8		I_{CC}	1.0	2.0	2.5	mA
Current Consumption below UVLO	No switching, $V_{CC} = V_{CCOFF} - 0.1$ V, V_{CS} = 0 V		I_{CC_UVLO}		75	125	µA
DRIVER OUTPUT							
Output Voltage Rise-Time	C_{DRV} = 10 nF, 10% to 90% V_{DRVMAX}		t_r		40	55	ns
Output Voltage Fall-Time	C_{DRV} = 10 nF, 90% to 10% V_{DRVMAX}		t_f		20	35	ns
Driver Source Resistance			R_{DRV_SOURCE}		1.2		Ω
Driver Sink Resistance			R_{DRV_SINK}		0.5		Ω
Output Peak Source Current			I_{DRV_SOURCE}		4		A
Output Peak Sink Current			I_{DRV_SINK}		8		A
Maximum Driver Output Voltage	V_{CC} = 35 V, C_{DRV} > 1 nF (ver. B, D and Q)		V_{DRVMAX}	9.0	9.5	10.5	V
	V_{CC} = 35 V, C_{DRV} > 1 nF (ver. A, C)			4.3	4.7	5.5	
Minimum Driver Output Voltage	$V_{CC} = V_{CCOFF}$ + 200 mV (ver. B)		V_{DRVMIN}	7.2	7.8	8.5	V
	$V_{CC} = V_{CCOFF}$ + 200 mV (ver. C)			4.2	4.7	5.3	
	$V_{CC} = V_{CCOFF}$ + 200 mV (ver. A, D and Q)			3.6	4.0	4.4	
CS INPUT							
Total Propagation Delay From CS to DRV Output On	V_{CS} goes down from 4 to −1 V, t_{f_CS} = 5 ns		t_{PD_ON}		35	60	ns
Total Propagation Delay From CS to DRV Output Off	V_{CS} goes up from −1 to 4 V, t_{r_CS} = 5 ns		t_{PD_OFF}		12	23	ns
CS Bias Current	V_{CS} = −20 mV		I_{CS}	−105	−100	−95	µA
Turn On CS Threshold Voltage			$V_{TH_CS_ON}$	−120	−75	−40	mV
Turn Off CS Threshold Voltage	Guaranteed by Design		$V_{TH_CS_OFF}$	−1		0	mV

Share Feedback
Your Opinion Matters

ELECTRICAL CHARACTERISTICS $-40\ °C \le T_J \le 125\ °C$; V_{CC} = 12 V; C_{DRV} = 0 nF; $R_{MIN_TON} = R_{MIN_TOFF}$ = 10 kΩ; V_{CS} = −1 to +4 V; f_{CS} = 100 kHz, DC_{CS} = 50%, unless otherwise noted. Typical values are at T_J = +25 °C

Parameter	Test Conditions	Symbol	Min	Typ	Max	Unit
CS INPUT						
Turn Off Timer Reset Threshold Voltage		$V_{TH_CS_RESET}$	0.4	0.5	0.6	V
CS Leakage Current	V_{CS} = 150 V	$I_{CS_LEAKAGE}$			0.4	μA
MINIMUM t_{ON} and t_{OFF} ADJUST						
Minimum t_{ON} time	R_{MIN_TON} = 0 Ω	t_{ON_MIN}	35	55	75	ns
	R_{MIN_TON} = 0 Ω, DFN8, WDFN8	t_{ON_MIN}	25	50	75	ns
Minimum t_{OFF} time	R_{MIN_TOFF} = 0 Ω	t_{OFF_MIN}	190	245	290	ns
	R_{MIN_TOFF} = 0 Ω, DFN8, WDFN8	t_{OFF_MIN}	160	245	290	ns
Minimum t_{ON} time	R_{MIN_TON} = 10 kΩ	t_{ON_MIN}	0.92	1.00	1.08	μs
Minimum t_{OFF} time	R_{MIN_TOFF} = 10 kΩ	t_{OFF_MIN}	0.92	1.00	1.08	μs
Minimum t_{ON} time	R_{MIN_TON} = 50 kΩ	t_{ON_MIN}	4.62	5.00	5.38	μs
Minimum t_{OFF} time	R_{MIN_TOFF} = 50 kΩ	t_{OFF_MIN}	4.62	5.00	5.38	μs
MAXIMUM t_{ON} ADJUST						
Maximum t_{ON} Time	V_{MAX_TON} = 3 V	t_{ON_MAX}	4.3	4.8	5.3	μs
Maximum t_{ON} Time	V_{MAX_TON} = 0.3 V	t_{ON_MAX}	41	48	55	μs
Maximum t_{ON} Output Current	V_{MAX_TON} = 0.3 V	I_{MAX_TON}	−105	−100	−95	μA

Product parametric performance is indicated in the Electrical Characteristics for the listed test conditions, unless otherwise noted. Product performance may not be indicated by the Electrical Characteristics if operated under different conditions.

Share Feedback
Your Opinion Matters

TYPICAL CHARACTERISTICS

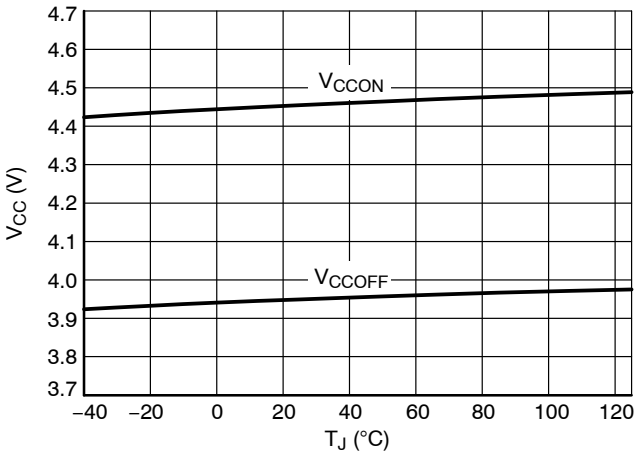

Figure 7. V_{CCON} and V_{CCOFF} Levels, V_{CS} = 0 V, ver. A, D, Q

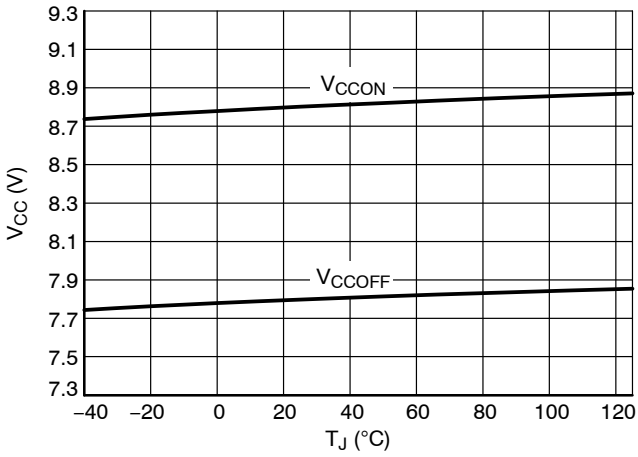

Figure 8. V_{CCON} and V_{CCOFF} Levels, V_{CS} = 0 V, ver. B, C

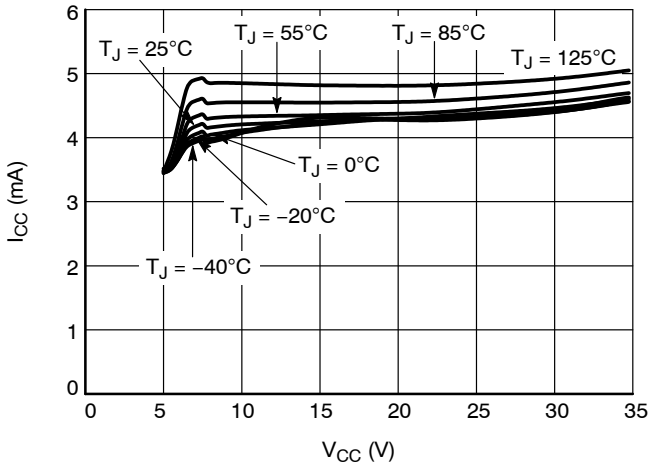

Figure 9. Current Consumption, C_{DRV} = 0 nF, f_{CS} = 500 kHz, ver. D

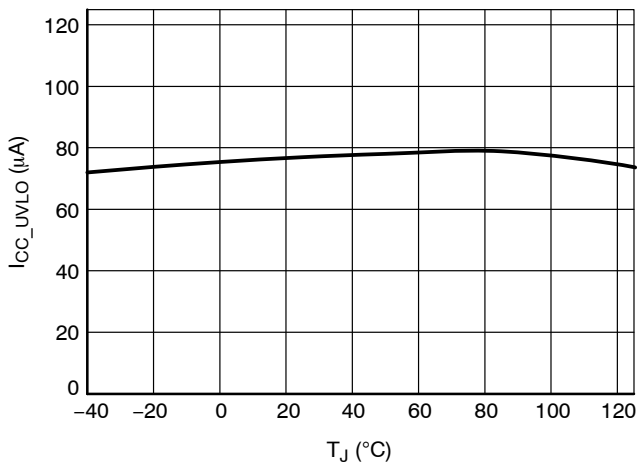

Figure 10. Current Consumption, V_{CC} = V_{CCOFF} − 0.1 V, V_{CS} = 0 V, ver. D

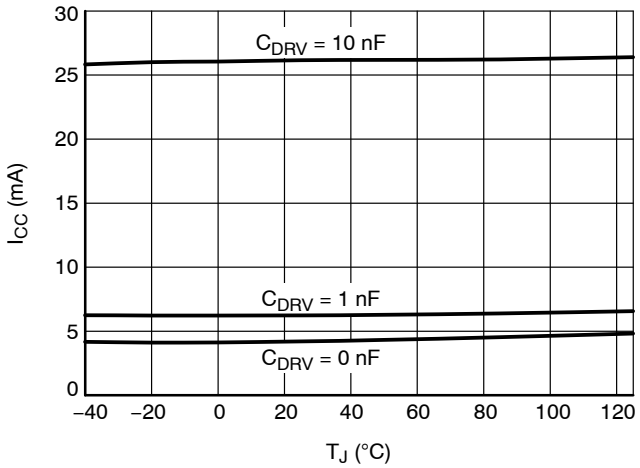

Figure 11. Current Consumption, V_{CC} = 12 V, V_{CS} = −1 to 4 V, f_{CS} = 500 kHz, ver. A

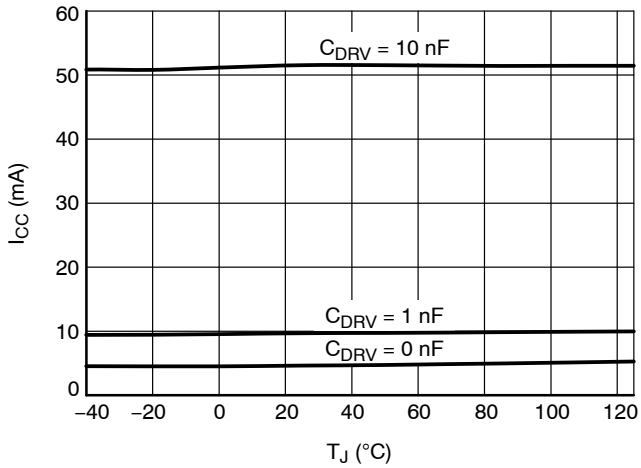

Figure 12. Current Consumption, V_{CC} = 12 V, V_{CS} = −1 to 4 V, f_{CS} = 500 kHz, ver. D

Share Feedback
Your Opinion Matters

TYPICAL CHARACTERISTICS

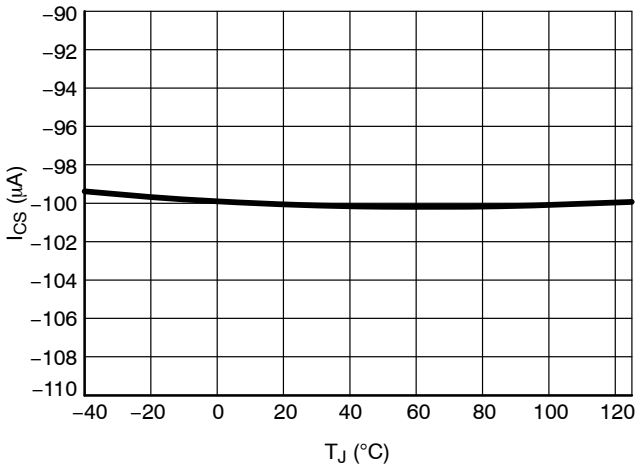

Figure 13. CS Current, V_{CS} = −20 mV

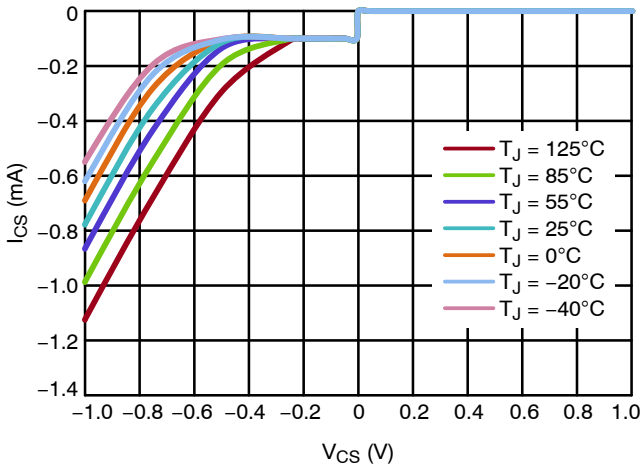

Figure 14. CS Current, V_{CC} = 12 V

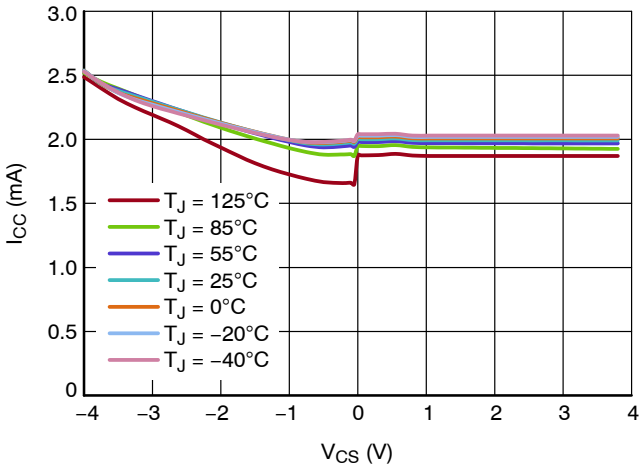

Figure 15. Supply Current vs. CS Voltage, V_{CC} = 12 V

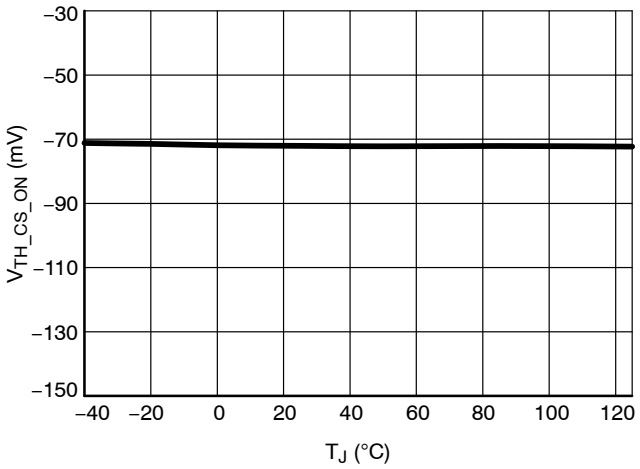

Figure 16. CS Turn-on Threshold

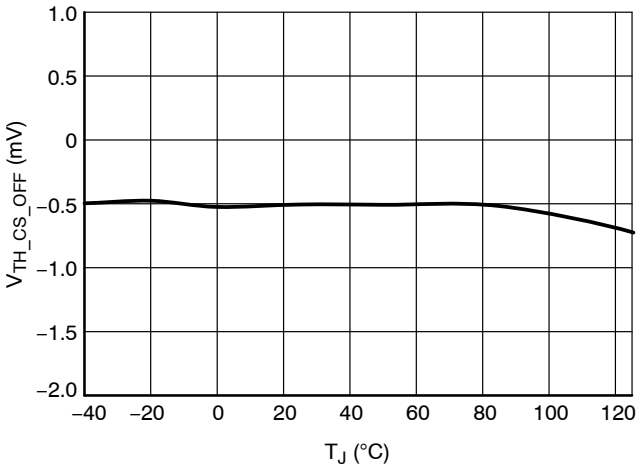

Figure 17. CS Turn-off Threshold

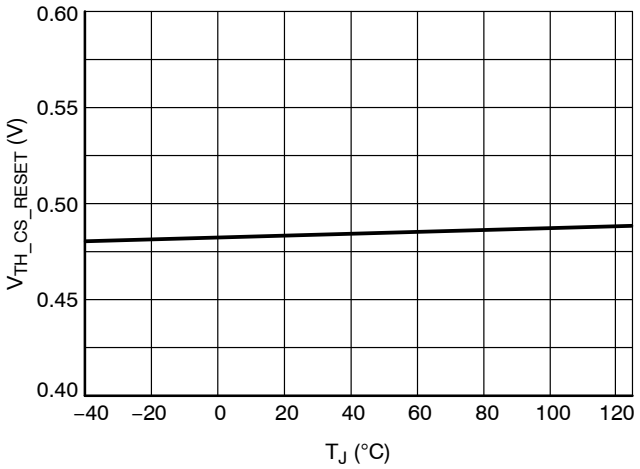

Figure 18. CS Reset Threshold

Share Feedback
Your Opinion Matters

TYPICAL CHARACTERISTICS

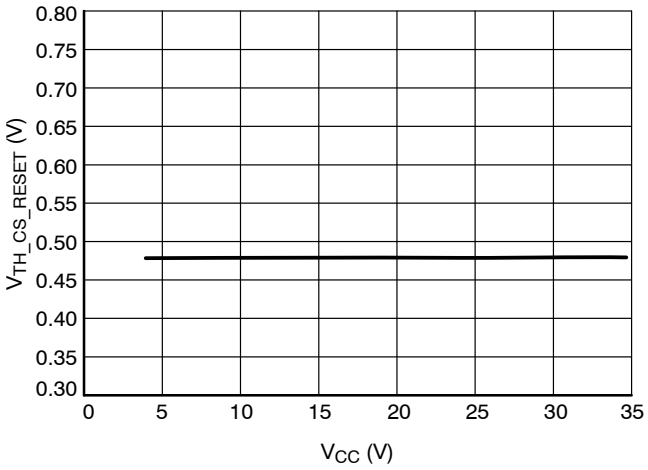

Figure 19. CS Reset Threshold

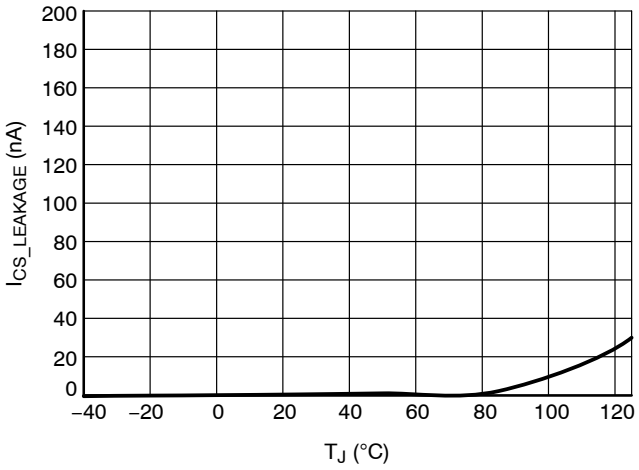

Figure 20. CS Leakage, V_{CS} = 150 V

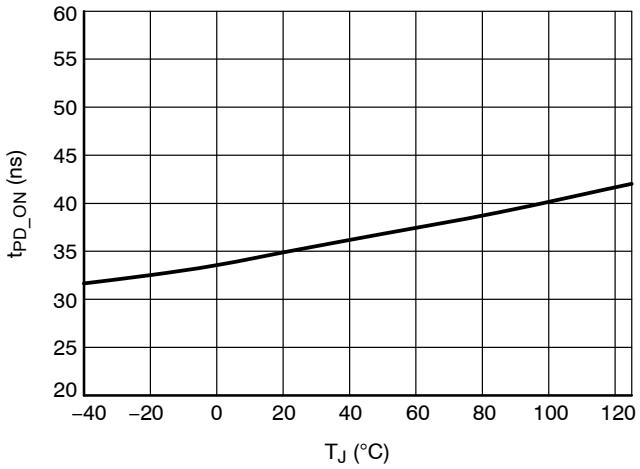

Figure 21. Propagation Delay from CS to DRV Output On

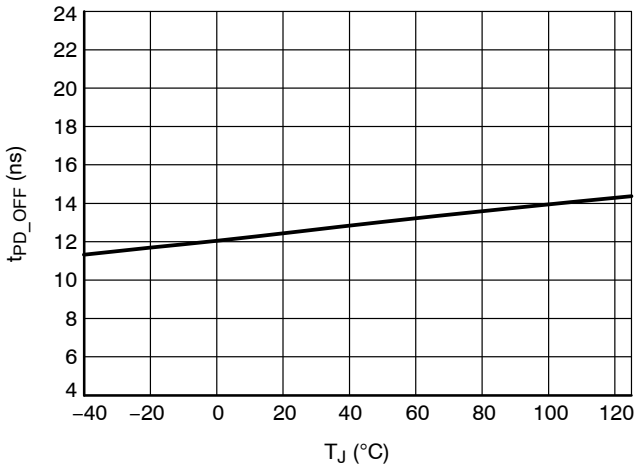

Figure 22. Propagation Delay from CS to DRV Output Off

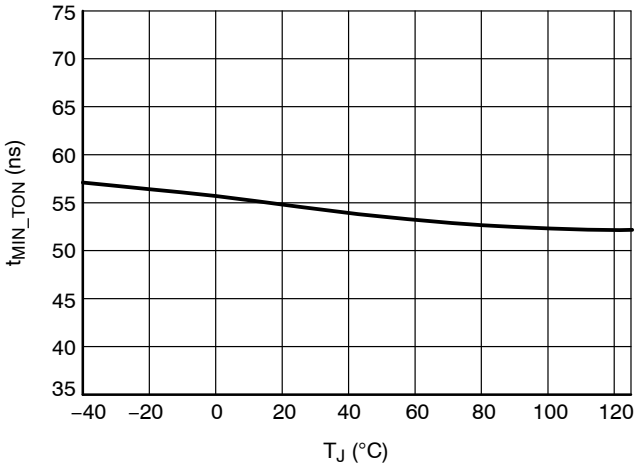

Figure 23. Minimum On-time R_{MIN_TON} = 0 Ω

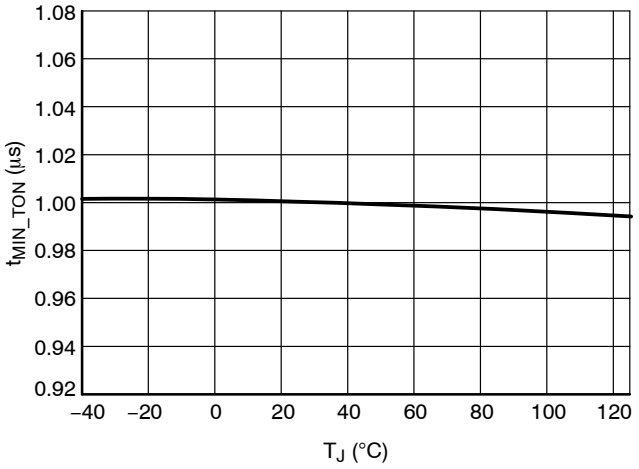

Figure 24. Minimum On-time R_{MIN_TON} = 10 kΩ

Share Feedback
Your Opinion Matters

TYPICAL CHARACTERISTICS

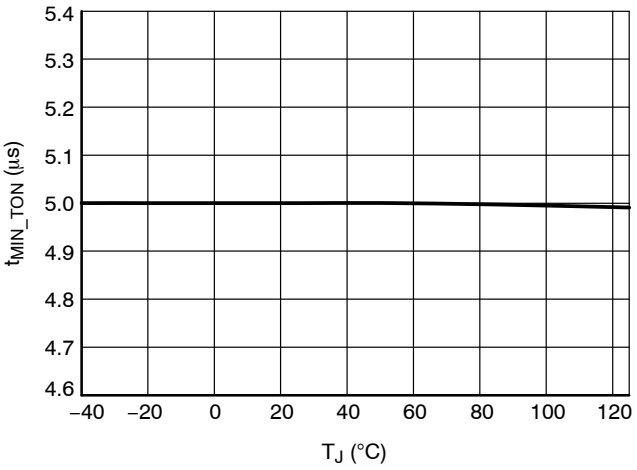

Figure 25. Minimum On-time R_{MIN_TON} = 50 kΩ

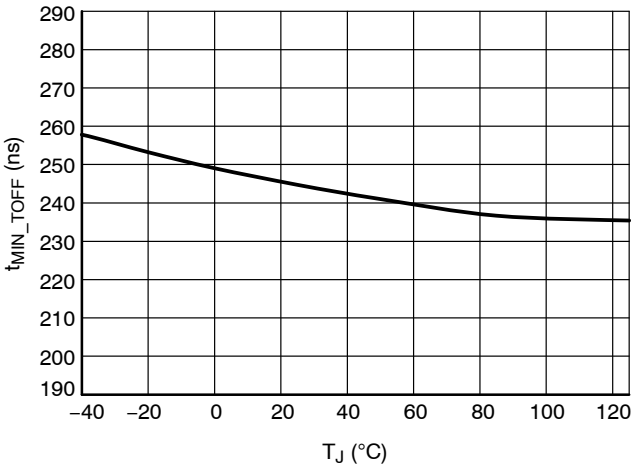

Figure 26. Minimum Off-time R_{MIN_TOFF} = 0 Ω

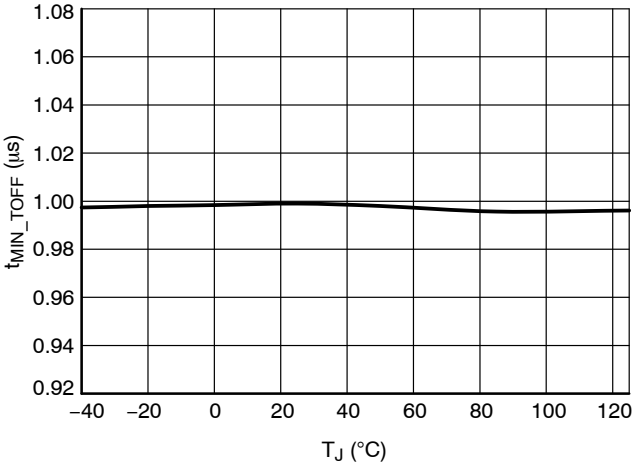

Figure 27. Minimum Off-time R_{MIN_TOFF} = 10 kΩ

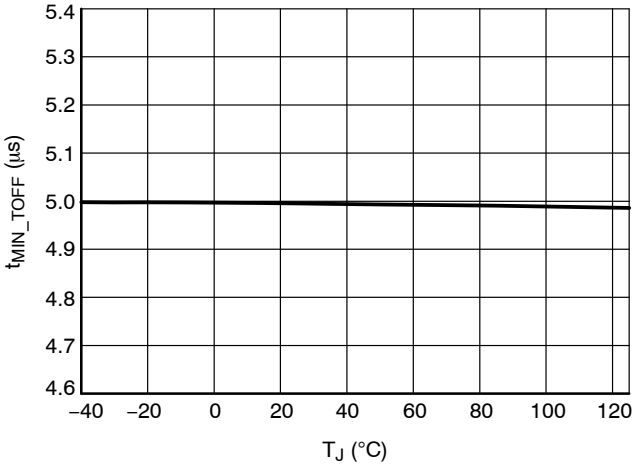

Figure 28. Minimum Off-time R_{MIN_TOFF} = 50 kΩ

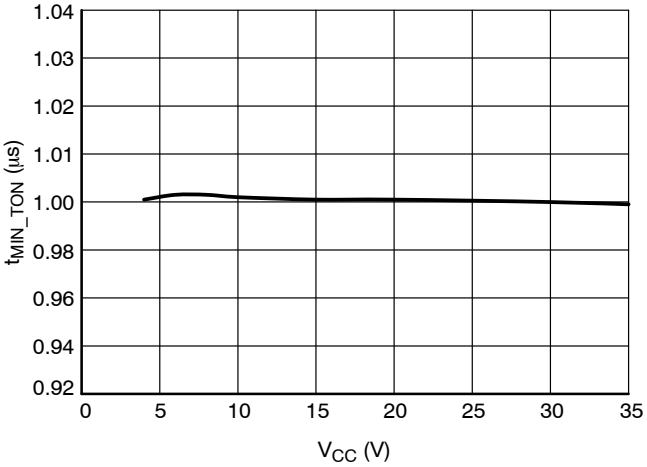

Figure 29. Minimum On-time R_{MIN_TON} = 10 kΩ

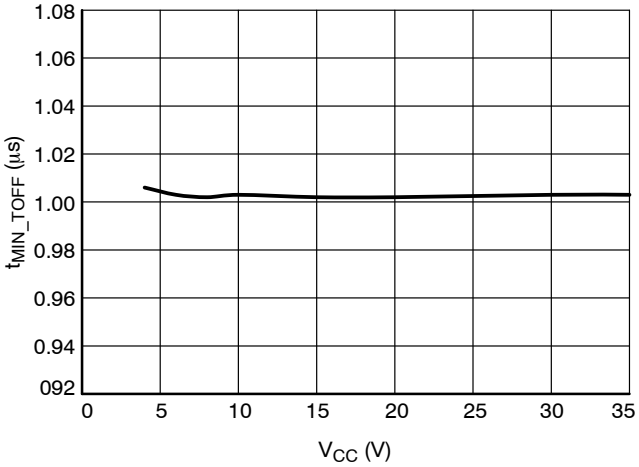

Figure 30. Minimum Off-time R_{MIN_TOFF} = 10 kΩ

Share Feedback
Your Opinion Matters

TYPICAL CHARACTERISTICS

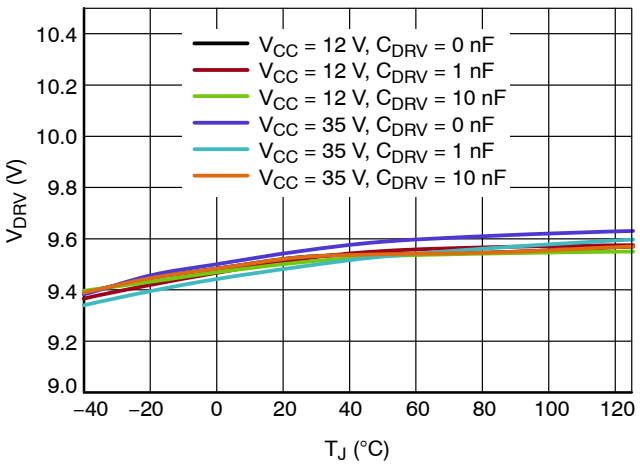

Figure 31. Driver and Output Voltage, ver. B, D and Q

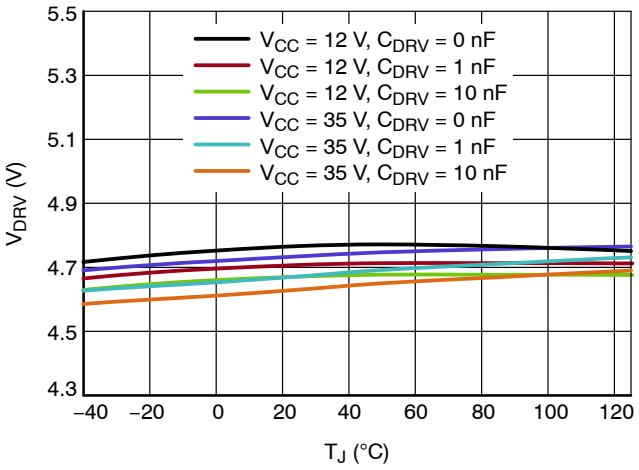

Figure 32. Driver Output Voltage, ver. A and C

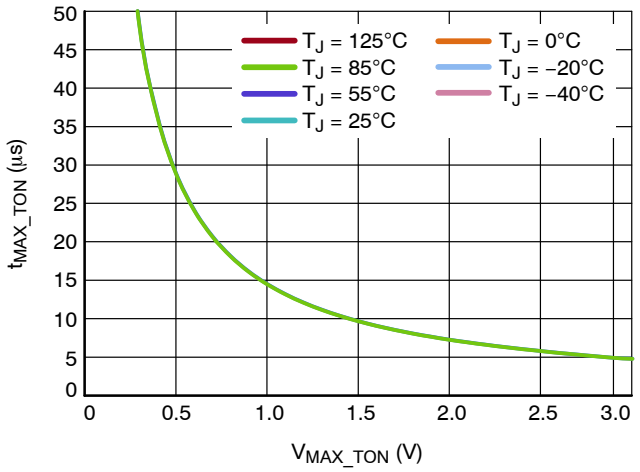

Figure 33. Maximum On-time, ver. Q

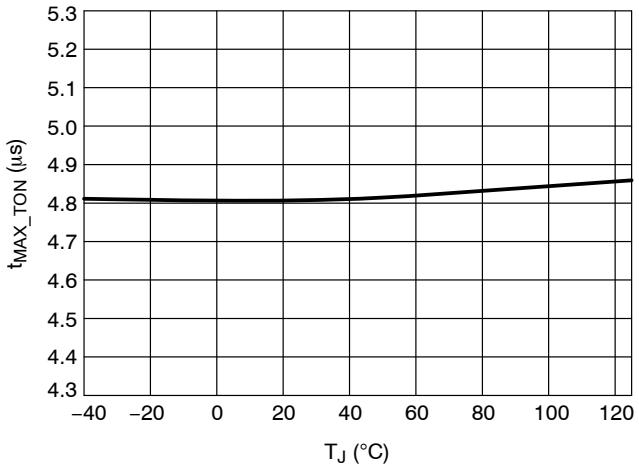

Figure 34. Maximum On-time, V_{MAX_TON} = 3 V, ver. Q

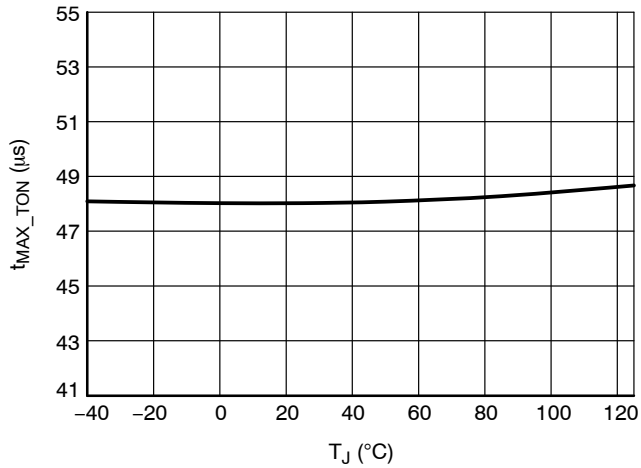

Figure 35. Maximum On-time, V_{MAX_TON} = 0.3 V, ver. Q

Share Feedback
Your Opinion Matters

APPLICATION INFORMATION

General Description

The NCP4308 is designed to operate either as a standalone IC or as a companion IC to a primary side controller to help achieve efficient synchronous rectification in switch mode power supplies. This controller features a high current gate driver along with high-speed logic circuitry to provide appropriately timed drive signals to a synchronous rectification MOSFET. With its novel architecture, the NCP4308 has enough versatility to keep the synchronous rectification system efficient under any operating mode.

The NCP4308 works from an available voltage with range from 4 V (A, D & Q options) or 8 V (B & C options) to 35 V (typical). The wide V_{CC} range allows direct connection to the SMPS output voltage of most adapters such as notebooks, cell phone chargers and LCD TV adapters.

Precise turn-off threshold of the current sense comparator together with an accurate offset current source allows the user to adjust for any required turn-off current threshold of the SR MOSFET switch using a single resistor. Compared to other SR controllers that provide turn-off thresholds in the range of −10 mV to −5 mV, the NCP4308 offers a turn-off threshold of 0 mV. When using a low $R_{DS(on)}$ SR (1 mΩ) MOSFET our competition, with a −10 mV turn off, will turn off with 10 A still flowing through the SR FET, while our 0 mV turn off turns off the FET at 0 A; significantly reducing the turn-off current threshold and improving efficiency. Many of the competitor parts maintain a drain source voltage across the MOSFET causing the SR MOSFET to operate in the linear region to reduce turn-off time. Thanks to the 8 A sink current of the NCP4308 significantly reduces turn off time allowing for a minimal drain source voltage to be utilized and efficiency maximized.

To overcome false triggering issues after turn-on and turn-off events, the NCP4308 provides adjustable minimum on-time and off-time blanking periods. Blanking times can be adjusted independently of IC VCC using external resistors connected to GND. If needed, blanking periods can be modulated using additional components.

An extremely fast turn-off comparator, implemented on the current sense pin, allows for NCP4308 implementation in CCM applications without any additional components or external triggering.

An output driver features capability to keep SR transistor closed even when there is no supply voltage for NCP4308. SR transistor drain voltage goes up and down during SMPS operation and this is transferred through drain gate capacitance to gate and may turn on transistor. NCP4308 uses this pulsing voltage at SR transistor gate (DRV pin) and uses it internally to provide enough supply to activate internal driver sink transistor. DRV voltage is pulled low (not to zero) thanks to this feature and eliminate the risk of turned on SR transistor before enough V_{CC} is applied to NCP4308.

Some IC versions include a MAX_TON circuit that helps a quasi resonant (QR) controller to work in CCM mode when a heavy load is present like in the example of a printer's motor starting up.

Current Sense Input

Figure 36 shows the internal connection of the CS circuitry on the current sense input. When the voltage on the secondary winding of the SMPS reverses, the body diode of M1 starts to conduct current and the voltage of M1's drain drops approximately to −1 V. The CS pin sources current of 100 μA that creates a voltage drop on the R_{SHIFT_CS} resistor (resistor is optional, we recommend shorting this resistor). Once the voltage on the CS pin is lower than $V_{TH_CS_ON}$ threshold, M1 is turned-on. Because of parasitic impedances, significant ringing can occur in the application. To overcome false sudden turn-off due to mentioned ringing, the minimum conduction time of the SR MOSFET is activated. Minimum conduction time can be adjusted using the R_{MIN_TON} resistor.

Share Feedback
Your Opinion Matters

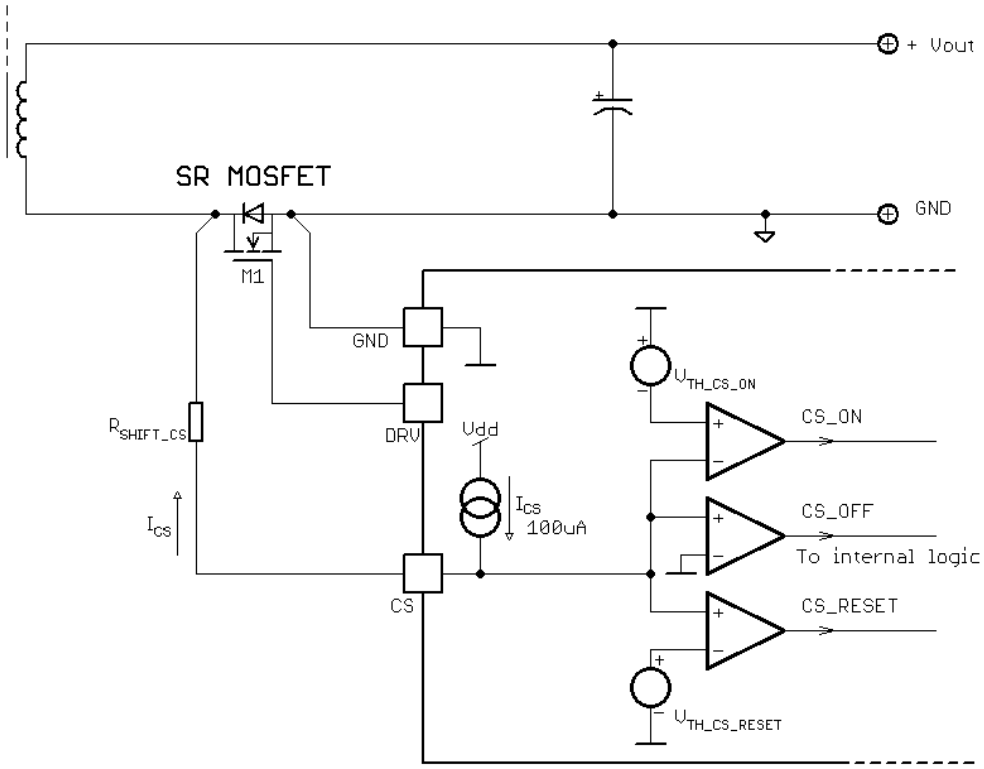

Figure 36. Current Sensing Circuitry Functionality

The SR MOSFET is turned-off as soon as the voltage on the CS pin is higher than $V_{TH_CS_OFF}$ (typically −0.5 mV minus any voltage dropped on the optional R_{SHIFT_CS}). For the same ringing reason, a minimum off-time timer is asserted once the V_{CS} goes above $V_{TH_CS_RESET}$. The minimum off-time can be externally adjusted using R_{MIN_TOFF} resistor. The minimum off-time generator can be re-triggered by MIN_TOFF reset comparator if some spurious ringing occurs on the CS input after SR MOSFET turn-off event. This feature significantly simplifies SR system implementation in flyback converters.

In an LLC converter the SR MOSFET M1 channel conducts while secondary side current is decreasing (refer to Figure 37). Therefore the turn-off current depends on MOSFET R_{DSON}. The −0.5 mV threshold provides an optimum switching period usage while keeping enough time margin for the gate turn-off. The R_{SHIFT_CS} resistor provides the designer with the possibility to modify (increase) the actual turn-on and turn-off secondary current thresholds. To ensure proper switching, the min_t_{OFF} timer is reset, when the V_{DS} of the MOSFET rings and falls down past the $V_{TH_CS_RESET}$. The minimum off-time needs to expire before another drive pulse can be initiated. Minimum off-time timer is started again when V_{DS} rises above $V_{TH_CS_RESET}$.

Share Feedback
Your Opinion Matters

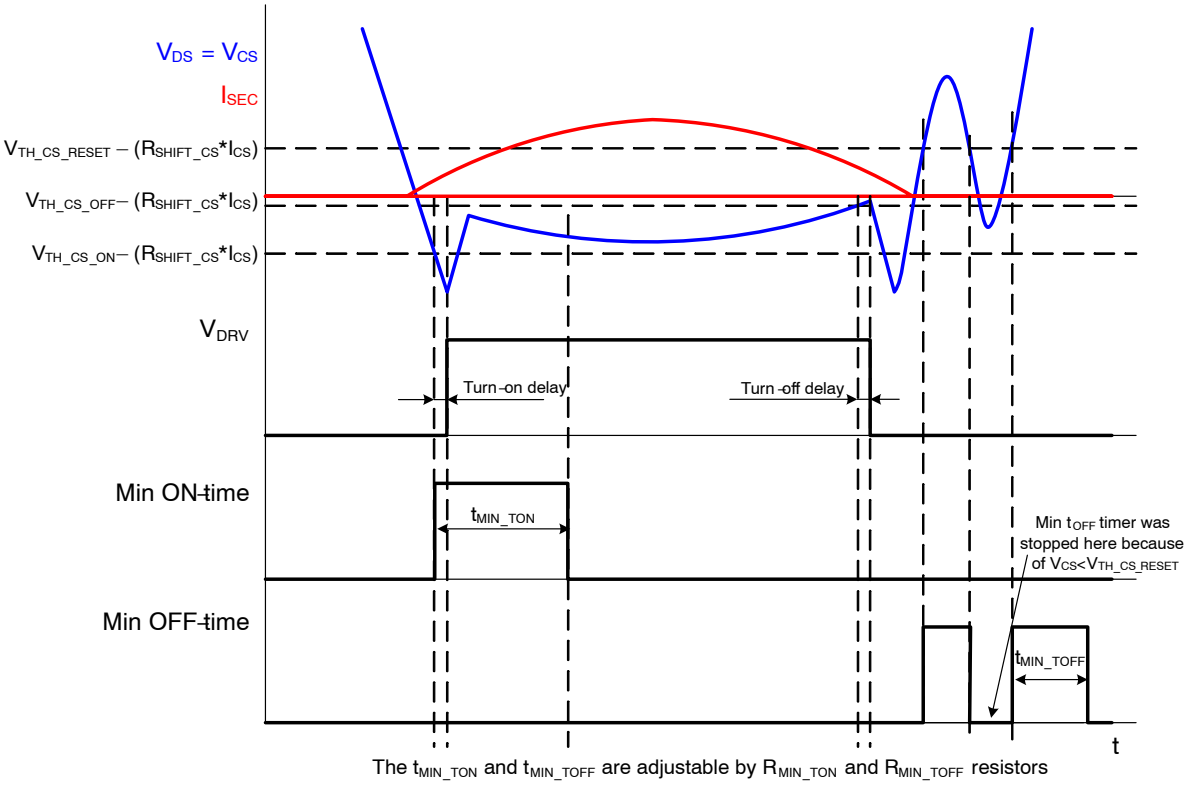

Figure 37. CS Input Comparators Thresholds and Blanking Periods Timing in LLC

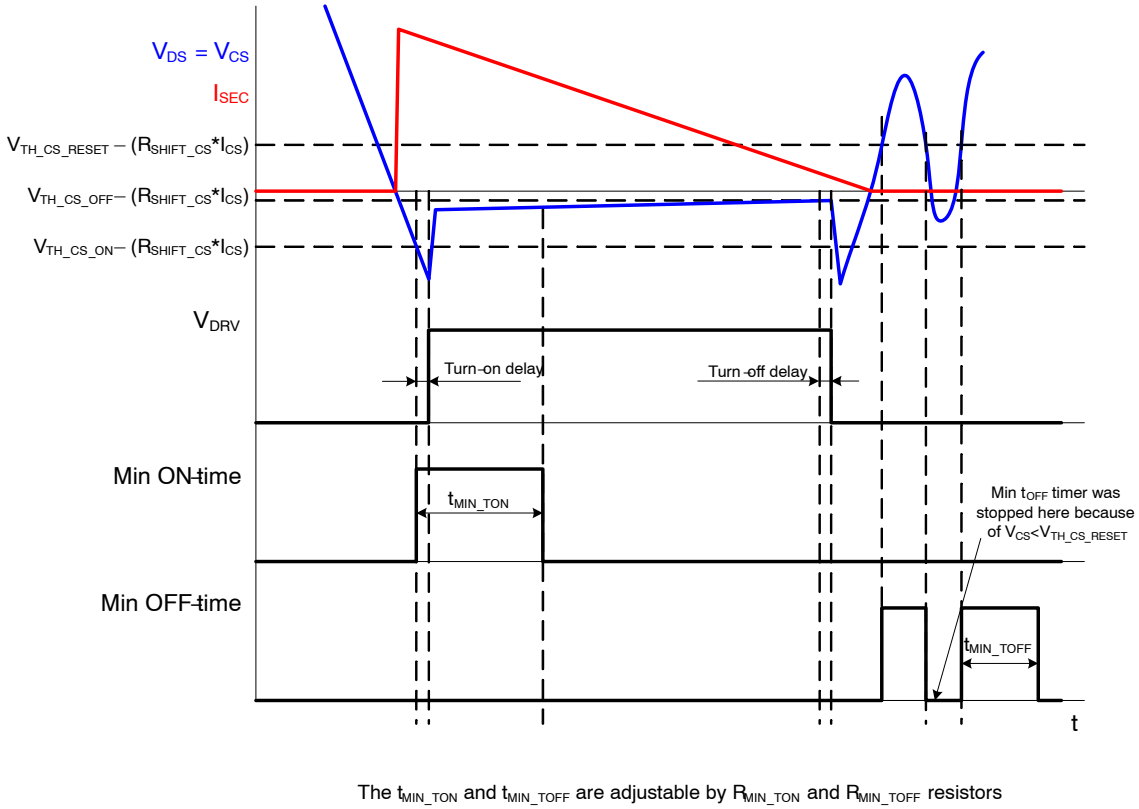

Figure 38. CS Input Comparators Thresholds and Blanking Periods Timing in Flyback

Share Feedback
Your Opinion Matters

If no R_{SHIFT_CS} resistor is used, the turn-on, turn-off and $V_{TH_CS_RESET}$ thresholds are fully given by the CS input specification (please refer to electrical characteristics table). The CS pin offset current causes a voltage drop that is equal to:

$$V_{RSHIFT_CS} = R_{SHIFT_CS} * I_{CS} \quad \text{(eq. 1)}$$

Final turn-on and turn off thresholds can be then calculated as:

$$V_{CS_TURN_ON} = V_{TH_CS_ON} - \left(R_{SHIFT_CS} * I_{CS}\right) \quad \text{(eq. 2)}$$

$$V_{CS_TURN_OFF} = V_{TH_CS_OFF} - \left(R_{SHIFT_CS} * I_{CS}\right) \quad \text{(eq. 3)}$$

$$V_{CS_RESET} = V_{TH_CS_RESET} - \left(R_{SHIFT_CS} * I_{CS}\right) \quad \text{(eq. 4)}$$

Note that R_{SHIFT_CS} impact on turn-on and $V_{TH_CS_RESET}$ thresholds is less critical than its effect on the turn-off threshold.

It should be noted that when using a SR MOSFET in a through hole package the parasitic inductance of the MOSFET package leads (refer to Figure 39) causes a turn-off current threshold increase. The current that flows through the SR MOSFET experiences a high $\Delta i(t)/\Delta t$ that induces an error voltage on the SR MOSFET leads due to their parasitic inductance. This error voltage is proportional to the derivative of the SR MOSFET current; and shifts the CS input voltage to zero when significant current still flows through the MOSFET channel. As a result, the SR MOSFET is turned-off prematurely and the efficiency of the SMPS is not optimized – refer to Figure 40 for a better understanding.

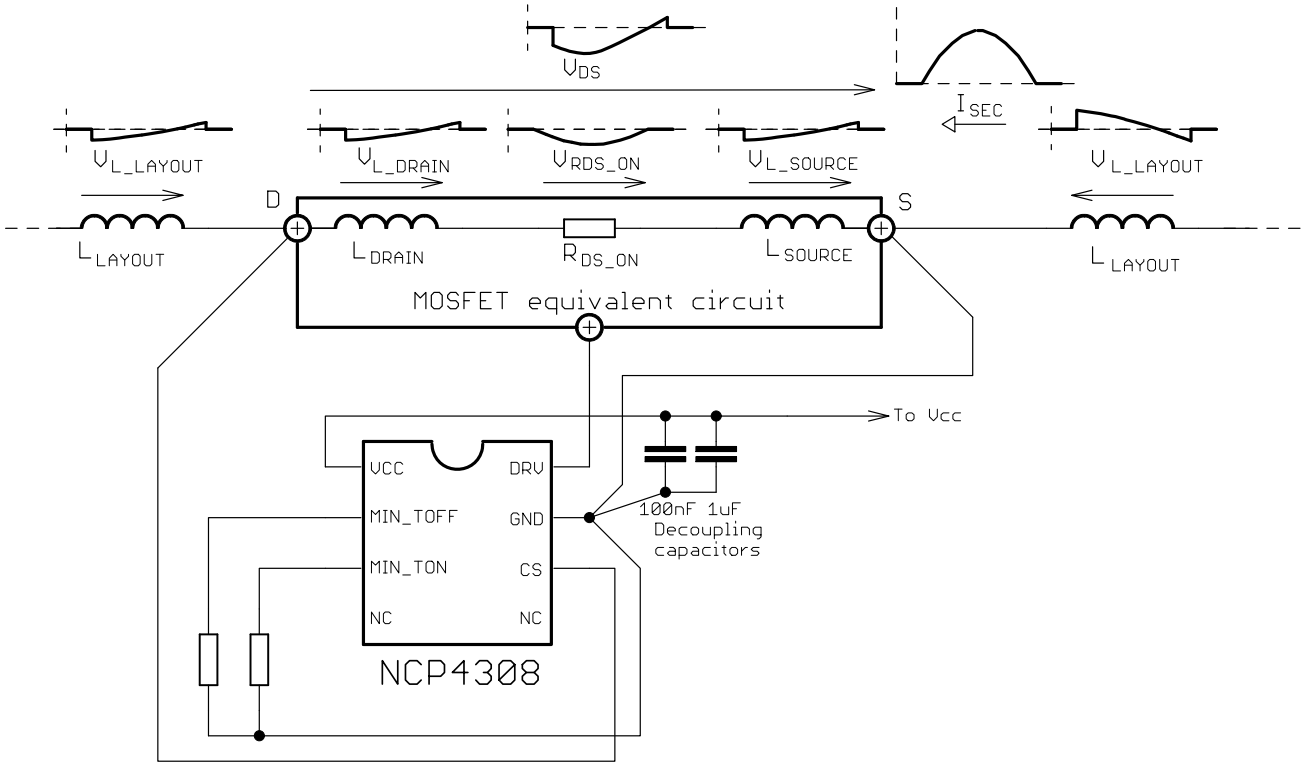

Figure 39. SR System Connection Including MOSFET and Layout Parasitic Inductances in LLC Application

Share Feedback
Your Opinion Matters

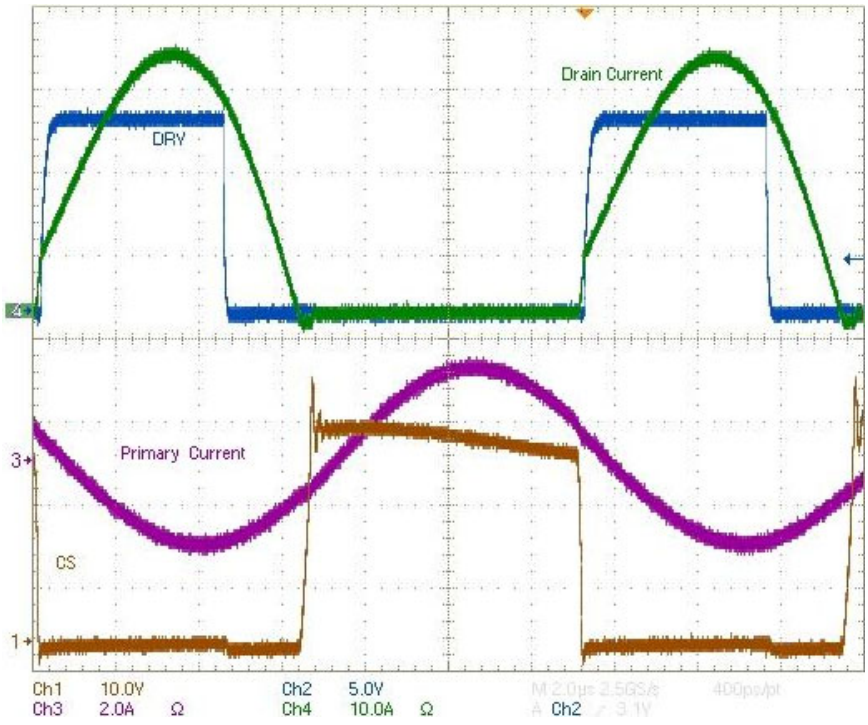

Figure 40. Waveforms From SR System Implemented in LLC Application and Using MOSFET in TO220 Package With Long Leads – SR MOSFET channel Conduction Time is Reduced

Note that the efficiency impact caused by the error voltage due to the parasitic inductance increases with lower MOSFETs $R_{DS(on)}$ and/or higher operating frequency.

It is thus beneficial to minimize SR MOSFET package leads length in order to maximize application efficiency. The optimum solution for applications with high secondary current $\Delta i/\Delta t$ and high operating frequency is to use lead-less SR MOSFET i.e. SR MOSFET in SMT package. The parasitic inductance of a SMT package is negligible causing insignificant CS turn-off threshold shift and thus minimum impact to efficiency (refer to Figure 41).

Share Feedback
Your Opinion Matters

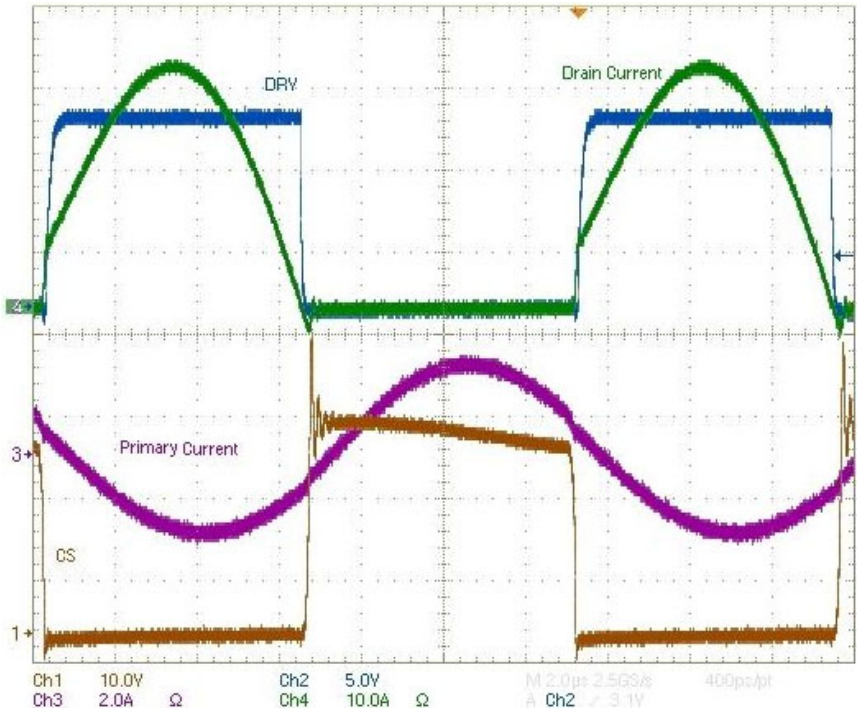

Figure 41. Waveforms from SR System Implemented in LLC Application and Using MOSFET in SMT Package with Minimized Parasitic Inductance − SR MOSFET Channel Conduction Time is Optimized

It can be deduced from the above paragraphs on the induced error voltage and parameter tables that turn-off threshold precision is quite critical. If we consider a SR MOSFET with $R_{DS(on)}$ of 1 mΩ, the 1 mV error voltage on the CS pin results in a 1 A turn-off current threshold difference; thus the PCB layout is very critical when implementing the SR system. Note that the CS turn-off comparator is referred to the GND pin. Any parasitic impedance (resistive or inductive − even on the magnitude of mΩ and nH values) can cause a high error voltage that is then evaluated by the CS comparator. Ideally the CS turn-off comparator should detect voltage that is caused by secondary current directly on the SR MOSFET channel resistance. In reality there will be small parasitic impedance on the CS path due to the bonding wires, leads and soldering. To assure the best efficiency results, a Kelvin connection of the SR controller to the power circuitry should be implemented. The GND pin should be connected to the SR MOSFET source soldering point and current sense pin should be connected to the SR MOSFET drain soldering point − refer to Figure 39. Using a Kelvin connection will avoid any impact of PCB layout parasitic elements on the SR controller functionality; SR MOSFET parasitic elements will still play a role in attaining an error voltage. Figure 42 and Figure 43 show examples of SR system layouts using MOSFETs in TO220 and SMT packages. It is evident that the MOSFET leads should be as short as possible to minimize parasitic inductances when using packages with leads (like TO220). Figure 43 shows how to layout design with two SR MOSFETs in parallel. It has to be noted that it is not easy task and designer has to paid lot of attention to do symmetric Kelvin connection.

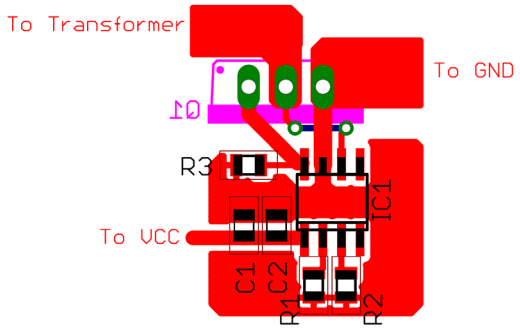

Figure 42. Recommended Layout When Using SR MOSFET in TO220 Package

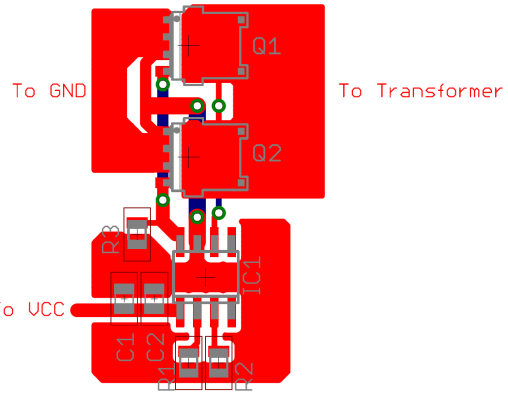

Figure 43. Recommended Layout When Using SR MOSFET in SMT Package (2x SO8 FL)

Share Feedback
Your Opinion Matters

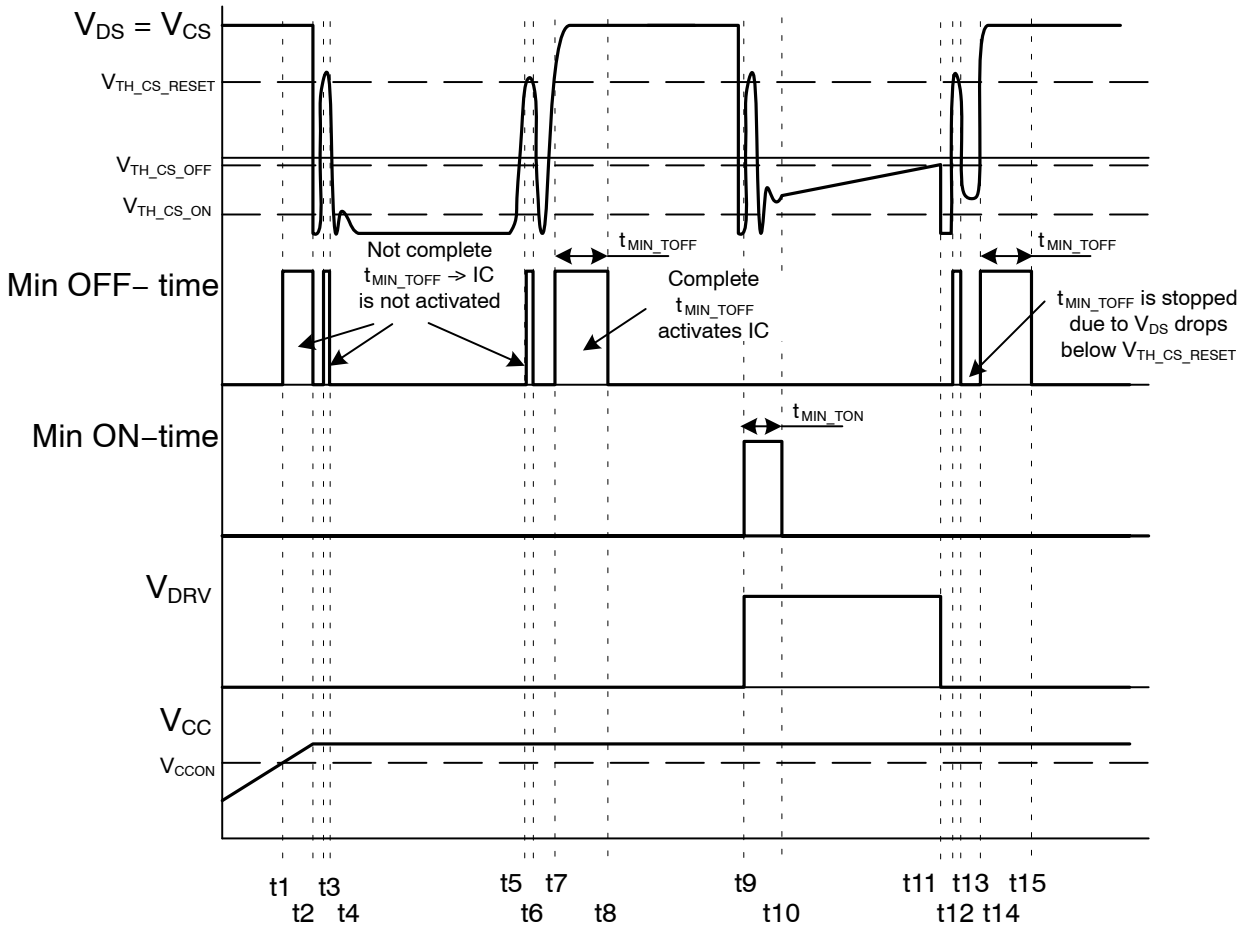

Figure 44. NCP4308 Operation after Start-Up Event

Self Synchronization

Self synchronization feature during start-up can be seen at Figure 44. Figure 44 shows how the minimum off-time timer is reset when CS voltage is oscillating through $V_{TH_CS_RESET}$ level. The NCP4308 starts operation at time t1. Internal logic waits for one complete minimum off-time period to expire before the NCP4308 can activate the driver after a start-up event. The minimum off-time timer starts to run at time t1, because V_{CS} is higher than $V_{TH_CS_RESET}$. The timer is then reset, before its set minimum off-time period expires, at time t2 thanks to CS voltage lower than $V_{TH_CS_RESET}$ threshold. The aforementioned reset situation can be seen again at time t3, t4, t5 and t6. A complete minimum off-time period elapses between times t7 and t8 allowing the IC to activate a driver output after time t8.

Minimum t_{ON} and t_{OFF} Adjustment

The NCP4308 offers an adjustable minimum on-time and off-time blanking periods that ease the implementation of a synchronous rectification system in any SMPS topology. These timers avoid false triggering on the CS input after the MOSFET is turned on or off.

The adjustment of minimum t_{ON} and t_{OFF} periods are done based on an internal timing capacitance and external resistors connected to the GND pin − refer to Figure 45 for a better understanding.

Share Feedback
Your Opinion Matters

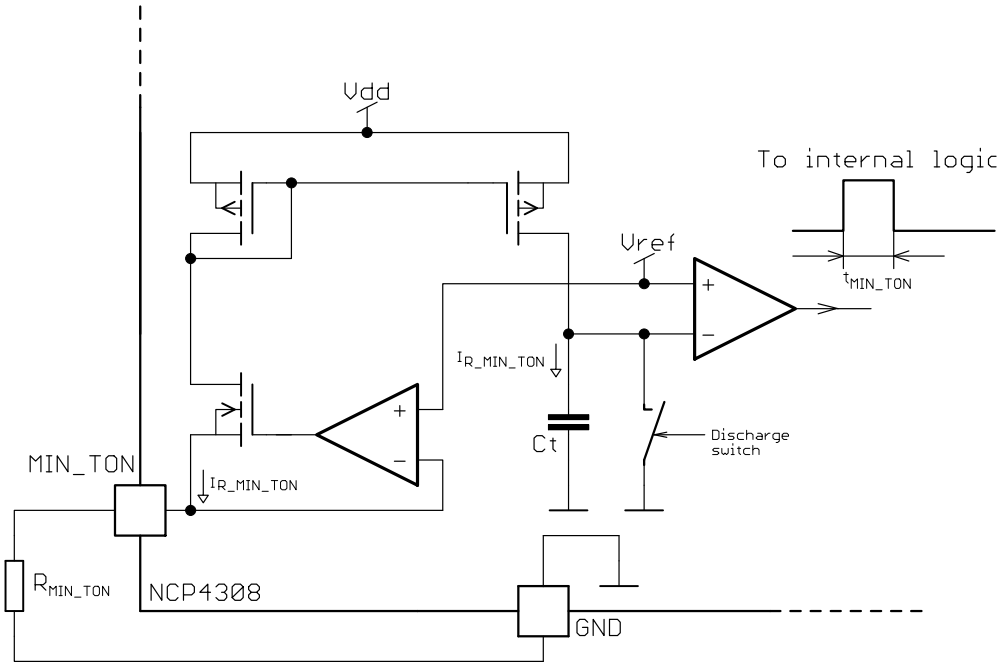

Figure 45. Internal Connection of the MIN_TON Generator (the MIN_TOFF Works in the Same Way)

Current through the MIN_TON adjust resistor can be calculated as:

$$I_{R_MIN_TON} = \frac{V_{ref}}{R_{MIN_TON}} \quad \text{(eq. 5)}$$

If the internal current mirror creates the same current through R_{MIN_TON} as used the internal timing capacitor (Ct) charging, then the minimum on-time duration can be calculated using this equation.

$$t_{MIN_TON} = C_t \frac{V_{ref}}{I_{R_MIN_TON}} = C_t \frac{V_{ref}}{\frac{V_{ref}}{R_{MIN_TON}}} = C_t \cdot R_{MIN_TON} \quad \text{(eq. 6)}$$

The internal capacitor size would be too large if $I_{R_MIN_TON}$ was used. The internal current mirror uses a proportional current, given by the internal current mirror ratio. One can then calculate the MIN_TON and MIN_TOFF blanking periods using below equations:

$$t_{MIN_TON} = 1.00 * 10^{-4} * R_{MIN_TON}\ [\mu s] \quad \text{(eq. 7)}$$

$$t_{MIN_TOFF} = 1.00 * 10^{-4} * R_{MIN_TOFF}\ [\mu s] \quad \text{(eq. 8)}$$

Note that the internal timing comparator delay affects the accuracy of Equations 7 and 8 when MIN_TON/ MIN_TOFF times are selected near to their minimum possible values. Please refer to Figures 46 and 47 for measured minimum on and off time charts.

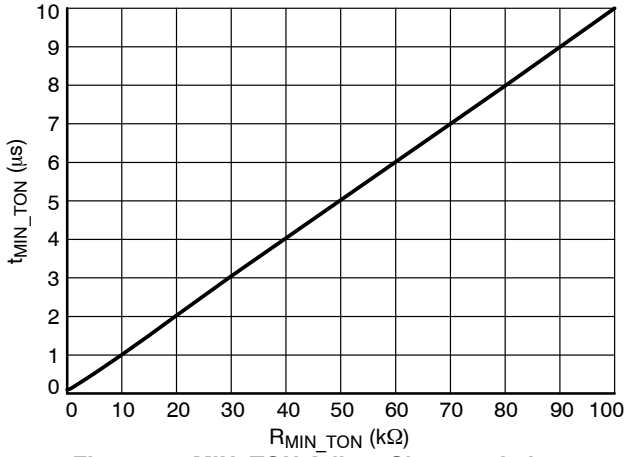

Figure 46. MIN_TON Adjust Characteristics

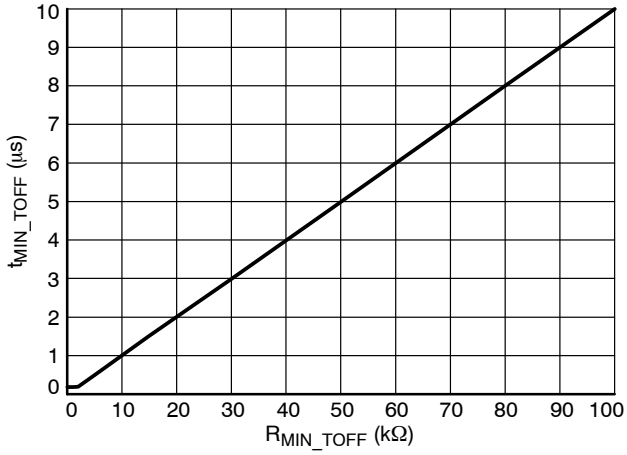

Figure 47. MIN_TOFF Adjust Characteristics

Share Feedback
Your Opinion Matters

The absolute minimum t_{ON} duration is internally clamped to 55 ns and minimum t_{OFF} duration to 245 ns in order to prevent any potential issues with the MIN_TON and/or MIN_TOFF pins being shorted to GND.

The NCP4308 features dedicated anti-ringing protection system that is implemented with a MIN_TOFF blank generator. The minimum off-time one-shot generator is restarted in the case when the CS pin voltage crosses $V_{TH_CS_RESET}$ threshold and MIN_TOFF period is active. The total off-time blanking period is prolonged due to the ringing in the application (refer to Figure 37).

Some applications may require adaptive minimum on and off time blanking periods. With NCP4308 it is possible to modulate blanking periods by using an external NPN transistor – refer to Figure 48. The modulation signal can be derived based on the load current, feedback regulator voltage or other application parameter.

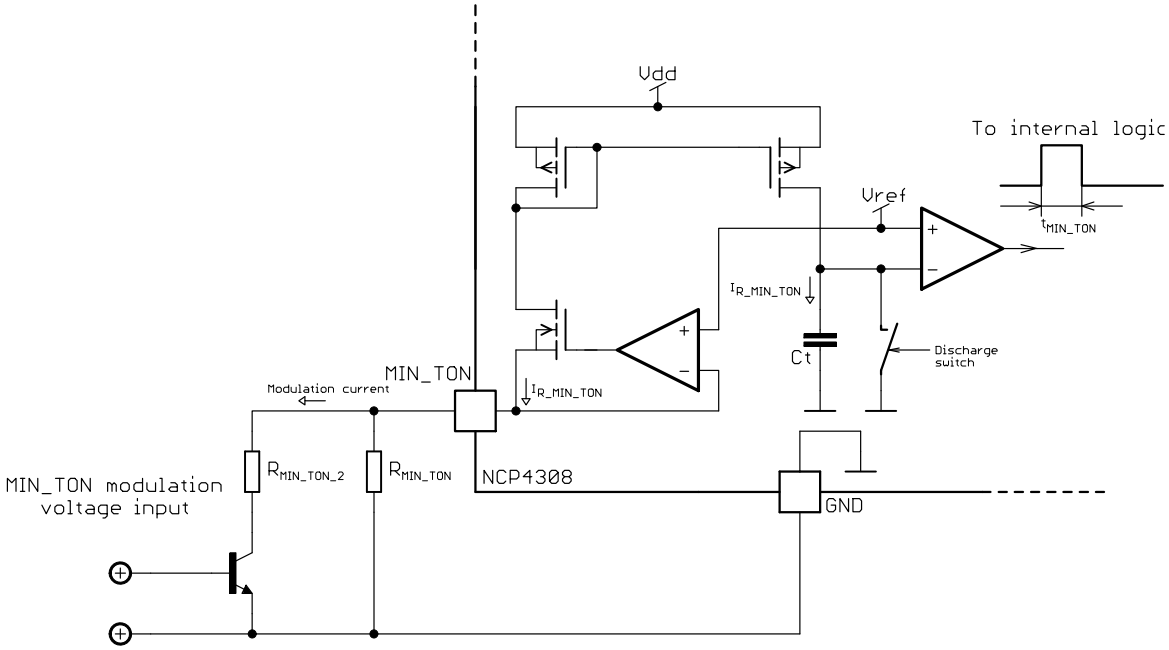

Figure 48. Possible Connection for MIN_T_{ON} and MIN_T_{OFF} Modulation

Maximum t_{ON} adjustment

The NCP4308Q offers an adjustable maximum on-time (like the min_t_{ON} and min_t_{OFF} settings shown above) that can be very useful for QR controllers at high loads. Under high load conditions the QR controller can operate in CCM thanks to this feature. The NCP4308Q version has the ability to turn-off the DRV signal to the SR MOSFET before the secondary side current reaches zero. The DRV signal from the NCP4308Q can be fed to the primary side through a pulse transformer (see Figure 4 for detail) to a transistor on the primary side to emulate a ZCD event before an actual ZCD event occurs. This feature helps to keep the minimum switching frequency up so that there is better energy transfer through the transformer (a smaller transformer core can be used). Also another advantage is that the IC controls the SR MOSFET and turns off from secondary side before the primary side is turned on in CCM to ensure no cross conduction. By controlling the SR MOSFET's turn off before the primary side turn off, producing a zero cross conduction operation, this will improve efficiency.

The Internal connection of the MAX_TON feature is shown in Figure 49. Figure 49 shows a method that allows for a modification of the maximum on-time according to output voltage. At a lower V_{OUT}, caused by hard overload or at startup, the maximum on-time should be longer than at nominal voltage. Resistor R_A can be used to modulate maximum on-time according to V_{OUT} or any other parameter.

The operational waveforms at heavy load in QR type SMPS are shown in Figure 50. After t_{MAX_TON} time is exceeded, the synchronous switch is turned off and the secondary current is conducted by the diode. Information about turned off SR MOSFET is transferred by the DRV pin through a small pulse transformer to the primary side where it acts on the ZCD detection circuit to allow the primary switch to be turned on. Secondary side current disappears before the primary switch is turned on without a possibility of cross current condition.

Share Feedback
Your Opinion Matters

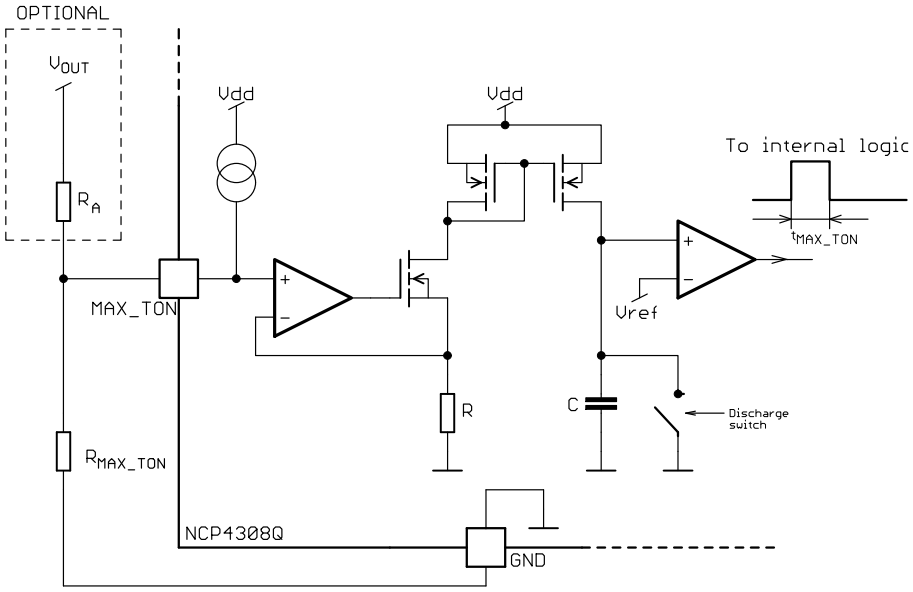

Figure 49. Internal Connection of the MAX_TON Generator, NCP4308Q

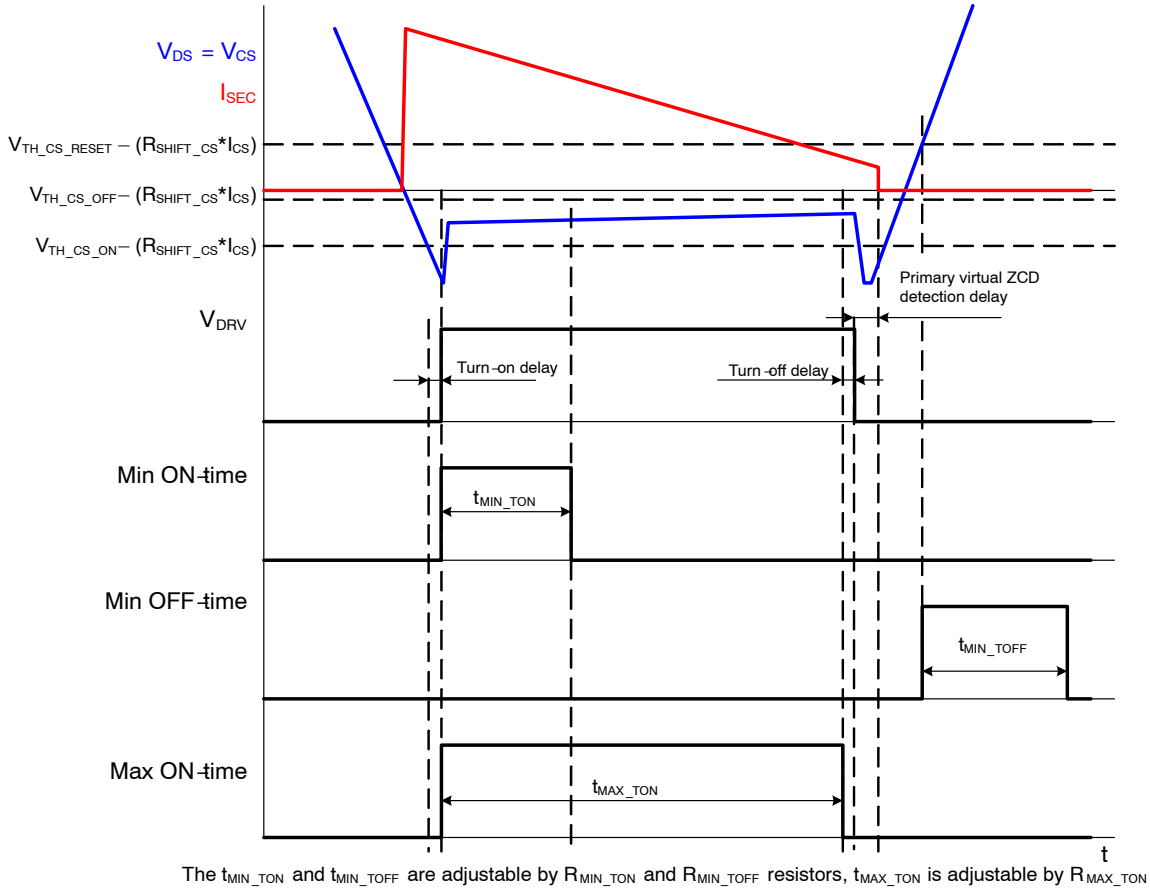

The t_{MIN_TON} and t_{MIN_TOFF} are adjustable by R_{MIN_TON} and R_{MIN_TOFF} resistors, t_{MAX_TON} is adjustable by R_{MAX_TON}

Figure 50. Function of MAX_TON Generator in Heavy Load Condition

Share Feedback
Your Opinion Matters

Power Dissipation Calculation

It is important to consider the power dissipation in the MOSFET driver of a SR system. If no external gate resistor is used and the internal gate resistance of the MOSFET is very low, nearly all energy losses related to gate charge are dissipated in the driver. Thus it is necessary to check the SR driver power losses in the target application to avoid over temperature and to optimize efficiency.

In SR systems the body diode of the SR MOSFET starts conducting before SR MOSFET is turned-on, because there is some delay from $V_{TH_CS_ON}$ detect to turn-on the driver. On the other hand, the SR MOSFET turn off process always starts before the drain to source voltage rises up significantly. Therefore, the MOSFET switch always operates under Zero Voltage Switching (ZVS) conditions when in a synchronous rectification system.

The following steps show how to approximately calculate the power dissipation and DIE temperature of the NCP4308 controller. Note that real results can vary due to the effects of the PCB layout on the thermal resistance.

Step 1 – MOSFET Gate-to Source Capacitance:

During ZVS operation the gate to drain capacitance does not have a Miller effect like in hard switching systems because the drain to source voltage does not change (or its change is negligible).

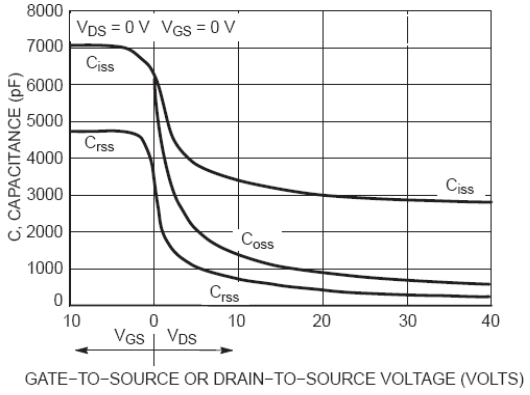

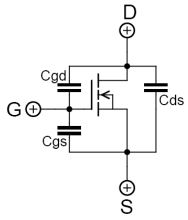

$$C_{iss} = C_{gs} + C_{gd}$$

$$C_{rss} = C_{gd}$$

$$C_{oss} = C_{ds} + C_{gd}$$

Figure 51. Typical MOSFET Capacitances Dependency on V_{DS} and V_{GS} Voltages

Therefore, the input capacitance of a MOSFET operating in ZVS mode is given by the parallel combination of the gate to source and gate to drain capacitances (i.e. C_{iss} capacitance for given gate to source voltage). The total gate charge, Q_{g_total}, of most MOSFETs on the market is defined for hard switching conditions. In order to accurately calculate the driving losses in a SR system, it is necessary to determine the gate charge of the MOSFET for operation specifically in a ZVS system. Some manufacturers define this parameter as Q_{g_ZVS}. Unfortunately, most data sheets do not provide this data. If the C_{iss} (or Q_{g_ZVS}) parameter is not available then it will need to be measured. Please note that the input capacitance is not linear (as shown Figure 51) and it needs to be characterized for a given gate voltage clamp level.

Step 2 – Gate Drive Losses Calculation:

Gate drive losses are affected by the gate driver clamp voltage. Gate driver clamp voltage selection depends on the type of MOSFET used (threshold voltage versus channel resistance). The total power losses (driving loses and conduction losses) should be considered when selecting the gate driver clamp voltage. Most of today's MOSFETs for SR systems feature low $R_{DS(on)}$ for 5 V V_{GS} voltage. The NCP4308 offers both a 5 V gate clamp and a 10 V gate clamp for those MOSFET that require higher gate to source voltage.

The total driving loss can be calculated using the selected gate driver clamp voltage and the input capacitance of the MOSFET:

$$P_{DRV_total} = V_{CC} \cdot V_{CLAMP} \cdot C_{g_ZVS} \cdot f_{SW} \quad \text{(eq. 9)}$$

Where:

V_{CC} is the NCP4308 supply voltage

V_{CLAMP} is the driver clamp voltage

C_{g_ZVS} is the gate to source capacitance of the MOSFET in ZVS mode

f_{sw} is the switching frequency of the target application

The total driving power loss won't only be dissipated in the IC, but also in external resistances like the external gate resistor (if used) and the MOSFET internal gate resistance (Figure 50). Because NCP4308 features a clamped driver, it's high side portion can be modeled as a regular driver switch with equivalent resistance and a series voltage source. The low side driver switch resistance does not drop immediately at turn-off, thus it is necessary to use an equivalent value ($R_{DRV_SIN_EQ}$) for calculations. This method simplifies power losses calculations and still provides acceptable accuracy. Internal driver power dissipation can then be calculated using Equation 10:

Share Feedback
Your Opinion Matters

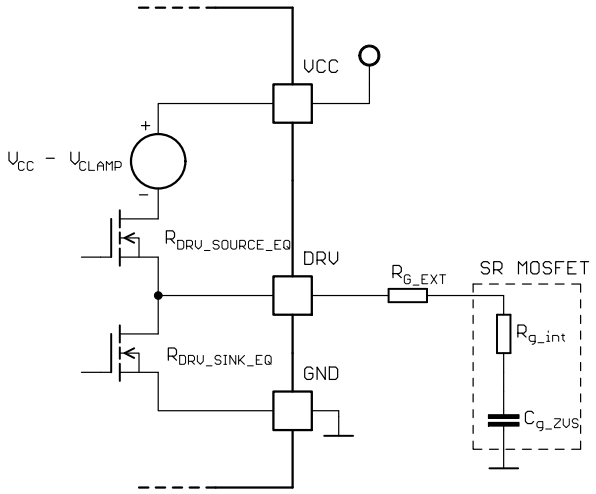

Figure 52. Equivalent Schematic of Gate Drive Circuitry

$$P_{DRV_IC} = \frac{1}{2} \cdot C_{g_ZVS} \cdot V_{CLAMP}^{\ 2} \cdot f_{SW} \cdot \left(\frac{R_{DRV_SINK_EQ}}{R_{DRV_SINK_EQ} + R_{G_EXT} + R_{g_int}} \right) + C_{g_ZVS} \cdot V_{CLAMP} \cdot f_{SW} \cdot \left(V_{CC} - V_{CLAMP} \right)$$

(eq. 10)

$$+ \frac{1}{2} \cdot C_{g_ZVS} \cdot V_{CLAMP}^{\ 2} \cdot f_{SW} \cdot \left(\frac{R_{DRV_SOURCE_EQ}}{R_{DRV_SOURCE_EQ} + R_{G_EXT} + R_{g_int}} \right)$$

Where:

$R_{DRV_SINK_EQ}$ is the NCP4308x driver low side switch equivalent resistance (0.5 Ω)

$R_{DRV_SOURCE_EQ}$ is the NCP4308x driver high side switch equivalent resistance (1.2 Ω)

R_{G_EXT} is the external gate resistor (if used)

R_{g_int} is the internal gate resistance of the MOSFET

Step 3 – IC Consumption Calculation:

In this step, power dissipation related to the internal IC consumption is calculated. This power loss is given by the I_{CC} current and the IC supply voltage. The I_{CC} current depends on switching frequency and also on the selected min t_{ON} and t_{OFF} periods because there is current flowing out from the min t_{ON} and t_{OFF} pins. The most accurate method for calculating these losses is to measure the I_{CC} current when C_{DRV} = 0 nF and the IC is switching at the target frequency with given MIN_TON and MIN_TOFF adjust resistors. IC consumption losses can be calculated as:

$$P_{CC} = V_{CC} \cdot I_{CC} \qquad \text{(eq. 11)}$$

Step 4 – IC Die Temperature Arise Calculation:

The die temperature can be calculated now that the total internal power losses have been determined (driver losses plus internal IC consumption losses). The package thermal resistance is specified in the maximum ratings table for a 35 μm thin copper layer with no extra copper plates on any pin (i.e. just 0.5 mm trace to each pin with standard soldering points are used).

The DIE temperature is calculated as:

$$T_{DIE} = \left(P_{DRV_IC} + P_{CC} \right) \cdot R_{\theta J-A} + T_A \qquad \text{(eq. 12)}$$

Where:

P_{DRV_IC} is the IC driver internal power dissipation

P_{CC} is the IC control internal power dissipation

$R_{\theta JA}$ is the thermal resistance from junction to ambient

T_A is the ambient temperature

Share Feedback
Your Opinion Matters

PRODUCT OPTIONS

OPN	Package	UVLO [V]	DRV clamp [V]	Pin 5 function	Usage
NCP4308ADR2G	SOIC8	4.5	4.7	NC	LLC, CCM flyback, DCM flyback, QR, QR with primary side CCM control
NCP4308AMTTWG	WDFN8	4.5	4.7	NC	
NCP4308DDR2G	SOIC8	4.5	9.5	NC	
NCP4308DMNTWG	DFN8	4.5	9.5	NC	
NCP4308DMTTWG	WDFN8	4.5	9.5	NC	
NCP4308QDR2G	SOIC8	4.5	9.5	MAX_TON	QR with forced CCM from secondary side

ORDERING INFORMATION

Device	Package	Package Marking	Packing	Shipping†
NCP4308DDR2G	SOIC8	NCP4308D	SOIC-8 (Pb-Free)	2500 / Tape & Reel

DISCONTINUED (Note 2)

NCP4308ADR2G	SOIC8	NCP4308A	SOIC-8 (Pb-Free)	2500 / Tape & Reel
NCP4308QDR2G	SOIC8	NCP4308Q	SOIC-8 (Pb-Free)	2500 / Tape & Reel
NCP4308DMNTWG	DFN8	4308D	DFN-8 (Pb-Free)	4000 / Tape & Reel
NCP4308AMTTWG	WDFN8	EA	WDFN-8 (Pb-Free)	3000 / Tape & Reel
NCP4308DMTTWG	WDFN8	ED	WDFN-8 (Pb-Free)	3000 / Tape & Reel

† For information on tape and reel specifications, including part orientation and tape sizes, please refer to our Tape and Reel Packaging Specifications Brochure, BRD8011/D.

2. **DISCONTINUED:** These devices are not available. Please contact your **onsemi** representative for information. The most current information on these devices may be available on www.onsemi.com.

Share Feedback
Your Opinion Matters

REVISION HISTORY

Revision	Description of Changes	Date
2	Rebranded the Data Sheet to **onsemi** format. NCP4308ADR2G, NCP4308QDR2G, NCP4308DMNTWG, NCP4308AMTTWG, NCP4308DMTTWG OPNs Marked as Discontinued.	1/28/2026

This document has undergone updates prior to the inclusion of this revision history table. The changes tracked here only reflect updates made on the noted approval dates.

Share Feedback
Your Opinion Matters

DFN8, 4x4
CASE 488AF
ISSUE C

DATE 15 JAN 2009

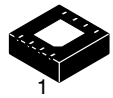

SCALE 2:1

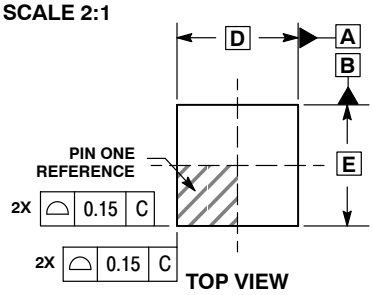

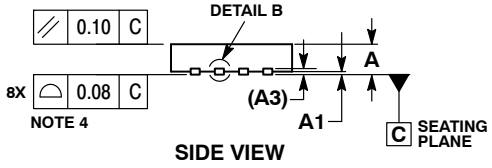

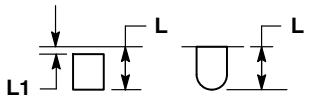

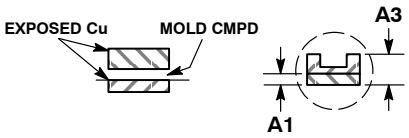

NOTES:
1. DIMENSIONS AND TOLERANCING PER ASME Y14.5M, 1994.
2. CONTROLLING DIMENSION: MILLIMETERS.
3. DIMENSION b APPLIES TO PLATED TERMINAL AND IS MEASURED BETWEEN 0.15 AND 0.30MM FROM TERMINAL TIP.
4. COPLANARITY APPLIES TO THE EXPOSED PAD AS WELL AS THE TERMINALS.
5. DETAILS A AND B SHOW OPTIONAL CONSTRUCTIONS FOR TERMINALS.

	MILLIMETERS	
DIM	MIN	MAX
A	0.80	1.00
A1	0.00	0.05
A3	0.20 REF	
b	0.25	0.35
D	4.00 BSC	
D2	1.91	2.21
E	4.00 BSC	
E2	2.09	2.39
e	0.80 BSC	
K	0.20	---
L	0.30	0.50
L1	---	0.15

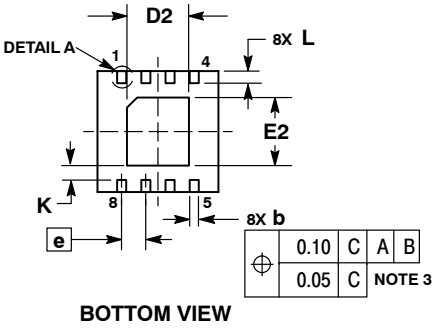

GENERIC MARKING DIAGRAM*

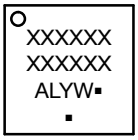

XXXX = Specific Device Code
A = Assembly Location
L = Wafer Lot
Y = Year
W = Work Week
▪ = Pb−Free Package

(Note: Microdot may be in either location)

*This information is generic. Please refer to device data sheet for actual part marking. Pb−Free indicator, “G” or microdot “ ▪”, may or may not be present.

SOLDERING FOOTPRINT*

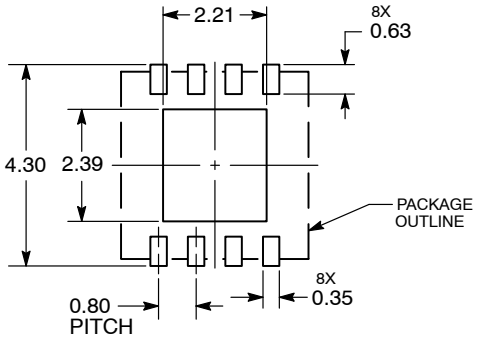

DIMENSIONS: MILLIMETERS

*For additional information on our Pb−Free strategy and soldering details, please download the ON Semiconductor Soldering and Mounting Techniques Reference Manual, SOLDERRM/D.

DOCUMENT NUMBER:	**98AON15232D**	Electronic versions are uncontrolled except when accessed directly from the Document Repository. Printed versions are uncontrolled except when stamped “CONTROLLED COPY” in red.
DESCRIPTION:	**DFN8, 4X4, 0.8P**	**PAGE 1 OF 1**

onsemi and onsemi are trademarks of Semiconductor Components Industries, LLC dba **onsemi** or its subsidiaries in the United States and/or other countries. **onsemi** reserves the right to make changes without further notice to any products herein. **onsemi** makes no warranty, representation or guarantee regarding the suitability of its products for any particular purpose, nor does **onsemi** assume any liability arising out of the application or use of any product or circuit, and specifically disclaims any and all liability, including without limitation special, consequential or incidental damages. **onsemi** does not convey any license under its patent rights nor the rights of others.

© Semiconductor Components Industries, LLC, 2004



SCALE 4:1

WDFN8 2x2, 0.5P
CASE 511AT
ISSUE O

DATE 26 FEB 2010

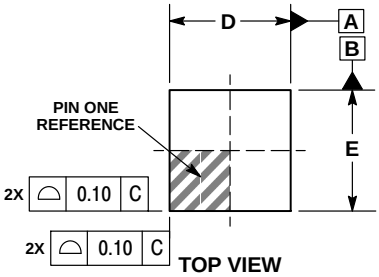

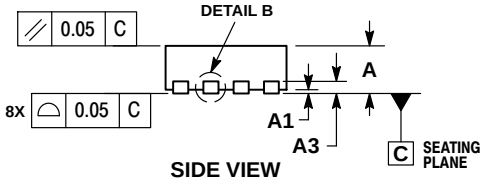

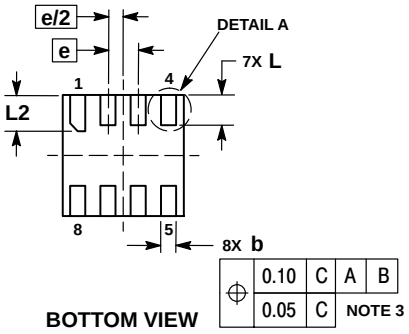

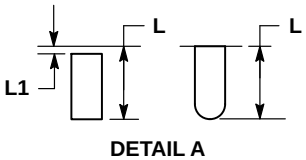

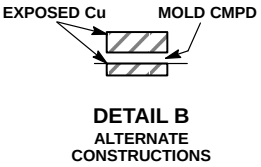

NOTES:
1. DIMENSIONING AND TOLERANCING PER ASME Y14.5M, 1994.
2. CONTROLLING DIMENSION: MILLIMETERS.
3. DIMENSION b APPLIES TO PLATED TERMINAL AND IS MEASURED BETWEEN 0.15 AND 0.30 MM FROM TERMINAL TIP.

	MILLIMETERS	
DIM	MIN	MAX
A	0.70	0.80
A1	0.00	0.05
A3	0.20 REF	
b	0.20	0.30
D	2.00 BSC	
E	2.00 BSC	
e	0.50 BSC	
L	0.40	0.60
L1	---	0.15
L2	0.50	0.70

GENERIC MARKING DIAGRAM*

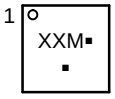

XX = Specific Device Code
M = Date Code
▪ = Pb−Free Device

(Note: Microdot may be in either location)

*This information is generic. Please refer to device data sheet for actual part marking. Pb−Free indicator, “G” or microdot “ ▪”, may or may not be present.

RECOMMENDED SOLDERING FOOTPRINT*

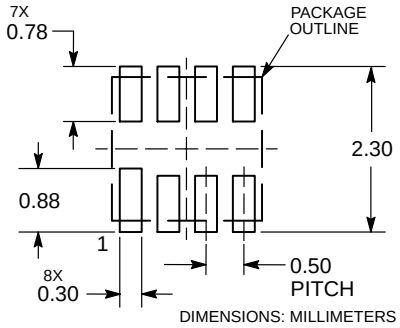

*For additional information on our Pb−Free strategy and soldering details, please download the **onsemi** Soldering and Mounting Techniques Reference Manual, SOLDERRM/D.

DOCUMENT NUMBER:	**98AON48654E**	Electronic versions are uncontrolled except when accessed directly from the Document Repository. Printed versions are uncontrolled except when stamped “CONTROLLED COPY” in red.	
DESCRIPTION:	**WDFN8, 2X2, 0.5 P**		**PAGE 1 OF 1**

onsemi and onsemi are trademarks of Semiconductor Components Industries, LLC dba **onsemi** or its subsidiaries in the United States and/or other countries. **onsemi** reserves the right to make changes without further notice to any products herein. **onsemi** makes no warranty, representation or guarantee regarding the suitability of its products for any particular purpose, nor does **onsemi** assume any liability arising out of the application or use of any product or circuit, and specifically disclaims any and all liability, including without limitation special, consequential or incidental damages. **onsemi** does not convey any license under its patent rights nor the rights of others.

© Semiconductor Components Industries, LLC, 2010



SCALE 1:1

SOIC−8 NB
CASE 751−07
ISSUE AK

DATE 16 FEB 2011

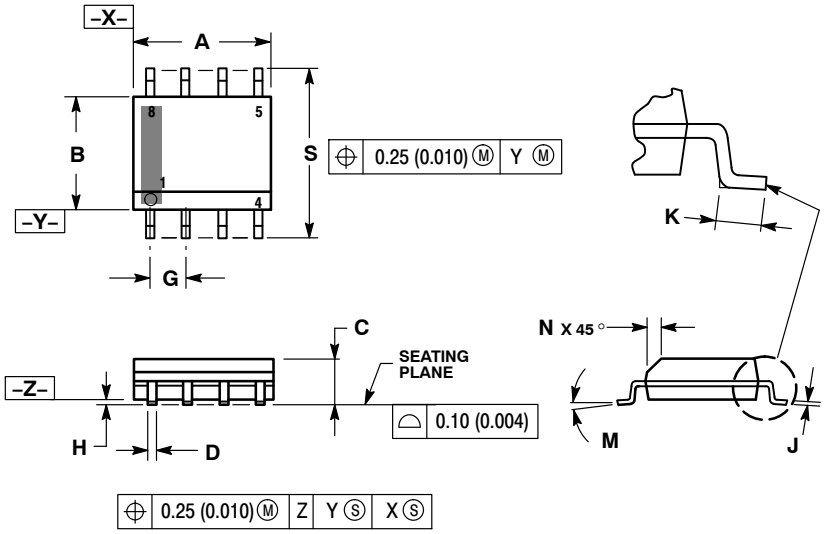

NOTES:
1. DIMENSIONING AND TOLERANCING PER ANSI Y14.5M, 1982.
2. CONTROLLING DIMENSION: MILLIMETER.
3. DIMENSION A AND B DO NOT INCLUDE MOLD PROTRUSION.
4. MAXIMUM MOLD PROTRUSION 0.15 (0.006) PER SIDE.
5. DIMENSION D DOES NOT INCLUDE DAMBAR PROTRUSION. ALLOWABLE DAMBAR PROTRUSION SHALL BE 0.127 (0.005) TOTAL IN EXCESS OF THE D DIMENSION AT MAXIMUM MATERIAL CONDITION.
6. 751−01 THRU 751−06 ARE OBSOLETE. NEW STANDARD IS 751−07.

	MILLIMETERS		INCHES	
DIM	MIN	MAX	MIN	MAX
A	4.80	5.00	0.189	0.197
B	3.80	4.00	0.150	0.157
C	1.35	1.75	0.053	0.069
D	0.33	0.51	0.013	0.020
G	1.27 BSC		0.050 BSC	
H	0.10	0.25	0.004	0.010
J	0.19	0.25	0.007	0.010
K	0.40	1.27	0.016	0.050
M	0°	8°	0°	8°
N	0.25	0.50	0.010	0.020
S	5.80	6.20	0.228	0.244

SOLDERING FOOTPRINT*

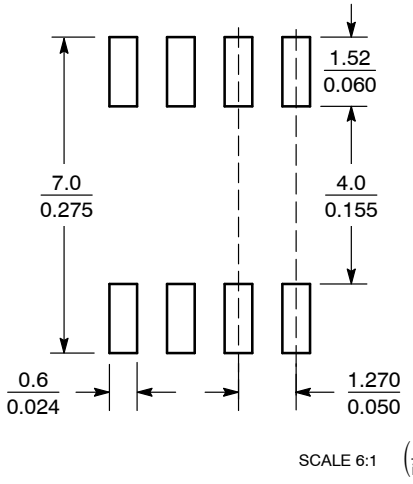

SCALE 6:1 (mm / inches)

*For additional information on our Pb−Free strategy and soldering details, please download the **onsemi** Soldering and Mounting Techniques Reference Manual, SOLDERRM/D.

GENERIC MARKING DIAGRAM*

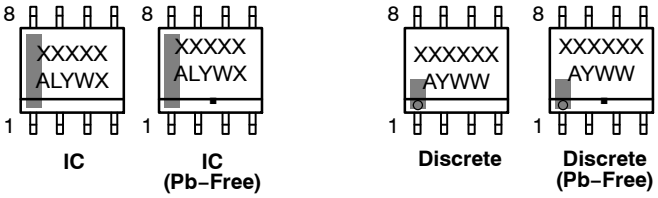

XXXXX = Specific Device Code
A = Assembly Location
L = Wafer Lot
Y = Year
W = Work Week
▪ = Pb−Free Package

XXXXXX = Specific Device Code
A = Assembly Location
Y = Year
WW = Work Week
▪ = Pb−Free Package

*This information is generic. Please refer to device data sheet for actual part marking. Pb−Free indicator, "G" or microdot "▪", may or may not be present. Some products may not follow the Generic Marking.

STYLES ON PAGE 2

DOCUMENT NUMBER:	**98ASB42564B**	Electronic versions are uncontrolled except when accessed directly from the Document Repository. Printed versions are uncontrolled except when stamped "CONTROLLED COPY" in red.	
DESCRIPTION:	**SOIC−8 NB**		**PAGE 1 OF 2**

onsemi and ONSEMI are trademarks of Semiconductor Components Industries, LLC dba **onsemi** or its subsidiaries in the United States and/or other countries. **onsemi** reserves the right to make changes without further notice to any products herein. **onsemi** makes no warranty, representation or guarantee regarding the suitability of its products for any particular purpose, nor does **onsemi** assume any liability arising out of the application or use of any product or circuit, and specifically disclaims any and all liability, including without limitation special, consequential or incidental damages. **onsemi** does not convey any license under its patent rights nor the rights of others.

SOIC−8 NB
CASE 751−07
ISSUE AK

DATE 16 FEB 2011

STYLE 1:
PIN 1. EMITTER
2. COLLECTOR
3. COLLECTOR
4. EMITTER
5. EMITTER
6. BASE
7. BASE
8. EMITTER

STYLE 2:
PIN 1. COLLECTOR, DIE, #1
2. COLLECTOR, #1
3. COLLECTOR, #2
4. COLLECTOR, #2
5. BASE, #2
6. EMITTER, #2
7. BASE, #1
8. EMITTER, #1

STYLE 3:
PIN 1. DRAIN, DIE #1
2. DRAIN, #1
3. DRAIN, #2
4. DRAIN, #2
5. GATE, #2
6. SOURCE, #2
7. GATE, #1
8. SOURCE, #1

STYLE 4:
PIN 1. ANODE
2. ANODE
3. ANODE
4. ANODE
5. ANODE
6. ANODE
7. ANODE
8. COMMON CATHODE

STYLE 5:
PIN 1. DRAIN
2. DRAIN
3. DRAIN
4. DRAIN
5. GATE
6. GATE
7. SOURCE
8. SOURCE

STYLE 6:
PIN 1. SOURCE
2. DRAIN
3. DRAIN
4. SOURCE
5. SOURCE
6. GATE
7. GATE
8. SOURCE

STYLE 7:
PIN 1. INPUT
2. EXTERNAL BYPASS
3. THIRD STAGE SOURCE
4. GROUND
5. DRAIN
6. GATE 3
7. SECOND STAGE Vd
8. FIRST STAGE Vd

STYLE 8:
PIN 1. COLLECTOR, DIE #1
2. BASE, #1
3. BASE, #2
4. COLLECTOR, #2
5. COLLECTOR, #2
6. EMITTER, #2
7. EMITTER, #1
8. COLLECTOR, #1

STYLE 9:
PIN 1. EMITTER, COMMON
2. COLLECTOR, DIE #1
3. COLLECTOR, DIE #2
4. EMITTER, COMMON
5. EMITTER, COMMON
6. BASE, DIE #2
7. BASE, DIE #1
8. EMITTER, COMMON

STYLE 10:
PIN 1. GROUND
2. BIAS 1
3. OUTPUT
4. GROUND
5. GROUND
6. BIAS 2
7. INPUT
8. GROUND

STYLE 11:
PIN 1. SOURCE 1
2. GATE 1
3. SOURCE 2
4. GATE 2
5. DRAIN 2
6. DRAIN 2
7. DRAIN 1
8. DRAIN 1

STYLE 12:
PIN 1. SOURCE
2. SOURCE
3. SOURCE
4. GATE
5. DRAIN
6. DRAIN
7. DRAIN
8. DRAIN

STYLE 13:
PIN 1. N.C.
2. SOURCE
3. SOURCE
4. GATE
5. DRAIN
6. DRAIN
7. DRAIN
8. DRAIN

STYLE 14:
PIN 1. N−SOURCE
2. N−GATE
3. P−SOURCE
4. P−GATE
5. P−DRAIN
6. P−DRAIN
7. N−DRAIN
8. N−DRAIN

STYLE 15:
PIN 1. ANODE 1
2. ANODE 1
3. ANODE 1
4. ANODE 1
5. CATHODE, COMMON
6. CATHODE, COMMON
7. CATHODE, COMMON
8. CATHODE, COMMON

STYLE 16:
PIN 1. EMITTER, DIE #1
2. BASE, DIE #1
3. EMITTER, DIE #2
4. BASE, DIE #2
5. COLLECTOR, DIE #2
6. COLLECTOR, DIE #2
7. COLLECTOR, DIE #1
8. COLLECTOR, DIE #1

STYLE 17:
PIN 1. VCC
2. V2OUT
3. V1OUT
4. TXE
5. RXE
6. VEE
7. GND
8. ACC

STYLE 18:
PIN 1. ANODE
2. ANODE
3. SOURCE
4. GATE
5. DRAIN
6. DRAIN
7. CATHODE
8. CATHODE

STYLE 19:
PIN 1. SOURCE 1
2. GATE 1
3. SOURCE 2
4. GATE 2
5. DRAIN 2
6. MIRROR 2
7. DRAIN 1
8. MIRROR 1

STYLE 20:
PIN 1. SOURCE (N)
2. GATE (N)
3. SOURCE (P)
4. GATE (P)
5. DRAIN
6. DRAIN
7. DRAIN
8. DRAIN

STYLE 21:
PIN 1. CATHODE 1
2. CATHODE 2
3. CATHODE 3
4. CATHODE 4
5. CATHODE 5
6. COMMON ANODE
7. COMMON ANODE
8. CATHODE 6

STYLE 22:
PIN 1. I/O LINE 1
2. COMMON CATHODE/VCC
3. COMMON CATHODE/VCC
4. I/O LINE 3
5. COMMON ANODE/GND
6. I/O LINE 4
7. I/O LINE 5
8. COMMON ANODE/GND

STYLE 23:
PIN 1. LINE 1 IN
2. COMMON ANODE/GND
3. COMMON ANODE/GND
4. LINE 2 IN
5. LINE 2 OUT
6. COMMON ANODE/GND
7. COMMON ANODE/GND
8. LINE 1 OUT

STYLE 24:
PIN 1. BASE
2. EMITTER
3. COLLECTOR/ANODE
4. COLLECTOR/ANODE
5. CATHODE
6. CATHODE
7. COLLECTOR/ANODE
8. COLLECTOR/ANODE

STYLE 25:
PIN 1. VIN
2. N/C
3. REXT
4. GND
5. IOUT
6. IOUT
7. IOUT
8. IOUT

STYLE 26:
PIN 1. GND
2. dv/dt
3. ENABLE
4. ILIMIT
5. SOURCE
6. SOURCE
7. SOURCE
8. VCC

STYLE 27:
PIN 1. ILIMIT
2. OVLO
3. UVLO
4. INPUT+
5. SOURCE
6. SOURCE
7. SOURCE
8. DRAIN

STYLE 28:
PIN 1. SW_TO_GND
2. DASIC_OFF
3. DASIC_SW_DET
4. GND
5. V_MON
6. VBULK
7. VBULK
8. VIN

STYLE 29:
PIN 1. BASE, DIE #1
2. EMITTER, #1
3. BASE, #2
4. EMITTER, #2
5. COLLECTOR, #2
6. COLLECTOR, #2
7. COLLECTOR, #1
8. COLLECTOR, #1

STYLE 30:
PIN 1. DRAIN 1
2. DRAIN 1
3. GATE 2
4. SOURCE 2
5. SOURCE 1/DRAIN 2
6. SOURCE 1/DRAIN 2
7. SOURCE 1/DRAIN 2
8. GATE 1

DOCUMENT NUMBER:	**98ASB42564B**	Electronic versions are uncontrolled except when accessed directly from the Document Repository. Printed versions are uncontrolled except when stamped "CONTROLLED COPY" in red.	
DESCRIPTION:	**SOIC−8 NB**		**PAGE 2 OF 2**

onsemi and ONSEMI are trademarks of Semiconductor Components Industries, LLC dba **onsemi** or its subsidiaries in the United States and/or other countries. **onsemi** reserves the right to make changes without further notice to any products herein. **onsemi** makes no warranty, representation or guarantee regarding the suitability of its products for any particular purpose, nor does **onsemi** assume any liability arising out of the application or use of any product or circuit, and specifically disclaims any and all liability, including without limitation special, consequential or incidental damages. **onsemi** does not convey any license under its patent rights nor the rights of others.

© Semiconductor Components Industries, LLC, 2019

onsemi, , and other names, marks, and brands are registered and/or common law trademarks of Semiconductor Components Industries, LLC dba "**onsemi**" or its affiliates and/or subsidiaries in the United States and/or other countries. **onsemi** owns the rights to a number of patents, trademarks, copyrights, trade secrets, and other intellectual property. A listing of **onsemi**'s product/patent coverage may be accessed at www.onsemi.com/site/pdf/Patent−Marking.pdf. **onsemi** reserves the right to make changes at any time to any products or information herein, without notice. The information herein is provided "as−is" and **onsemi** makes no warranty, representation or guarantee regarding the accuracy of the information, product features, availability, functionality, or suitability of its products for any particular purpose, nor does **onsemi** assume any liability arising out of the application or use of any product or circuit, and specifically disclaims any and all liability, including without limitation special, consequential or incidental damages. Buyer is responsible for its products and applications using **onsemi** products, including compliance with all laws, regulations and safety requirements or standards, regardless of any support or applications information provided by **onsemi**. "Typical" parameters which may be provided in **onsemi** data sheets and/or specifications can and do vary in different applications and actual performance may vary over time. All operating parameters, including "Typicals" must be validated for each customer application by customer's technical experts. **onsemi** does not convey any license under any of its intellectual property rights nor the rights of others. **onsemi** products are not designed, intended, or authorized for use as a critical component in life support systems or any FDA Class 3 medical devices or medical devices with a same or similar classification in a foreign jurisdiction or any devices intended for implantation in the human body. Should Buyer purchase or use **onsemi** products for any such unintended or unauthorized application, Buyer shall indemnify and hold **onsemi** and its officers, employees, subsidiaries, affiliates, and distributors harmless against all claims, costs, damages, and expenses, and reasonable attorney fees arising out of, directly or indirectly, any claim of personal injury or death associated with such unintended or unauthorized use, even if such claim alleges that **onsemi** was negligent regarding the design or manufacture of the part. **onsemi** is an Equal Opportunity/Affirmative Action Employer. This literature is subject to all applicable copyright laws and is not for resale in any manner.

ADDITIONAL INFORMATION

TECHNICAL PUBLICATIONS:
Technical Library: www.onsemi.com/design/resources/technical−documentation
onsemi Website: www.onsemi.com

ONLINE SUPPORT: www.onsemi.com/support
For additional information, please contact your local Sales Representative at www.onsemi.com/support/sales

ENTEGRECİ

Bu belge www.entegreci.com üzerinden sunulmaktadır.

Elektronik komponent tedarikinde Entegreci

Entegreci, Eskişehir merkezli, Türkiye geneline satış yapan bir elektronik komponent mağazasıdır. Entegreler (IC), mikrodenetleyiciler, transistörler, diyotlar, pasif elemanlar, konnektörler, modüller ve geliştirme kartları tek adetten seri üretim adetlerine kadar satılır. Ürün sayfalarında güncel stok durumunu, fiyatı ve datasheet bağlantısını bulabilirsiniz.

Parça koduyla arama

Üretici parça numarasını yazın; stok ve fiyatı hemen görün.

www.entegreci.com

Ürün kategorileri

Entegreden kapasitöre tüm elektronik komponent kategorileri.

Kategorilere göz atın

Üreticiler

Aradığınız üreticinin ürünlerini tek sayfada inceleyin.

Üreticileri görün

Toplu alım ve teklif

Listede olmayan ya da yüksek adetli parçalar için teklif isteyin.

Teklif isteyin

www.entegreci.com | **destek@entegreci.com** | **0850 305 90 34**

Entegreci is an online electronic components store based in Türkiye. Search by manufacturer part number to see stock, prices and datasheets for integrated circuits, microcontrollers, transistors, passive components and connectors, or request a quote for parts that are not listed.

Bu sayfa Entegreci tarafından eklenmiştir. Belgenin önceki sayfaları asıl yayıncısına aittir ve içeriği değiştirilmemiştir; en güncel sürüm için belgenin yayıncısına başvurun.