NCP1217, NCP1217A

PWM Controller, Fixed Frequency, Current Mode

Housed in an SO−8 or PDIP−7 package, the NCP1217 represents the enhanced version of the NCP1203−based controllers. Due to its high drive capability, NCP1217 drives large gate−charge MOSFETs, which together with internal ramp compensation and built−in overvoltage protection, ease the design of modern AC/DC adapters. NCP1217 offers a true alternative to UC384X−based designs.

With an internal structure operating at different fixed frequencies (65–100–133 kHz), the controller features a high−voltage startup FET, which ensures a clean and loss less startup sequence. Its current−mode control topology provides an excellent input audio−susceptibility and inherent pulse−by−pulse control. Internal ramp compensation easily prevents subharmonic oscillations from taking place in continuous conduction mode designs.

When the current setpoint falls below a given value, e.g. the output power demand diminishes, the IC automatically enters the so−called skip cycle mode and provides excellent efficiency at light loads. Because this occurs at a user adjustable low peak current, no acoustic noise takes place.

The NCP1217 features two efficient protective circuitries: 1) In presence of an overcurrent condition, the output pulses are disabled and the device enters a safe burst mode, trying to restart. Once the default has gone, the device auto−recovers. 2) If an external signal (e.g. a temperature sensor) pulls Pin 1 above 3.2 V, output pulses are immediately stopped and the NCP1217 stays latched in this position. Reset occurs when the V_{CC} collapses to ground, e.g. the user unplugs the power supply.

Features

- Current−Mode with Adjustable Skip−Cycle Capability
- Built−in Internal Ramp Compensation
- Auto−Recovery Internal Output Short−Circuit Protection
- Internal 1.0 ms Soft−Start (NCP1217A Only)
- Limited Duty−Cycle to 50% (NCP1217A Only)
- Full Latchoff if Adjustment Pin is Brought High
- Extremely Low No−Load Standby Power
- Internal Temperature Shutdown
- 500 mA Peak Current Capability
- Fixed Frequency Versions at 65 kHz, 100 kHz and 133 kHz
- Direct Optocoupler Connection
- Internal Leading Edge Blanking
- SPICE Models Available for TRANsient and AC Analysis
- These are Pb−Free Devices

Typical Applications

- High Power AC/DC Converters for TVs, Set−Top Boxes, etc.
- Offline Adapters for Notebooks
- Telecom DC−DC Converters
- All Power Supplies

ON Semiconductor®

www.onsemi.com

MARKING DIAGRAMS

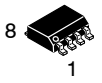

SOIC−8
D SUFFIX
CASE 751

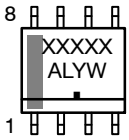

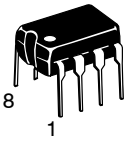

PDIP−7
P SUFFIX
CASE 626B

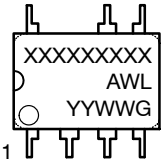

XXXXXX	=	Specific Device Code
A	=	Assembly Location
L, WL	=	Wafer Lot
Y, YY	=	Year
W, WW	=	Work Week
▪ or G	=	Pb−Free Package

DEVICE MARKING INFORMATION

See detailed device marking information in the ordering information section on page 17 of this data sheet.

PIN CONNECTIONS

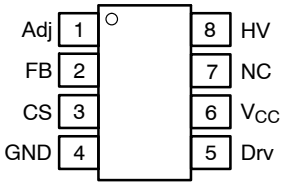

(Top View)

ORDERING INFORMATION

See detailed ordering and shipping information in the ordering information section on page 17 of this data sheet.

© Semiconductor Components Industries, LLC, 2015

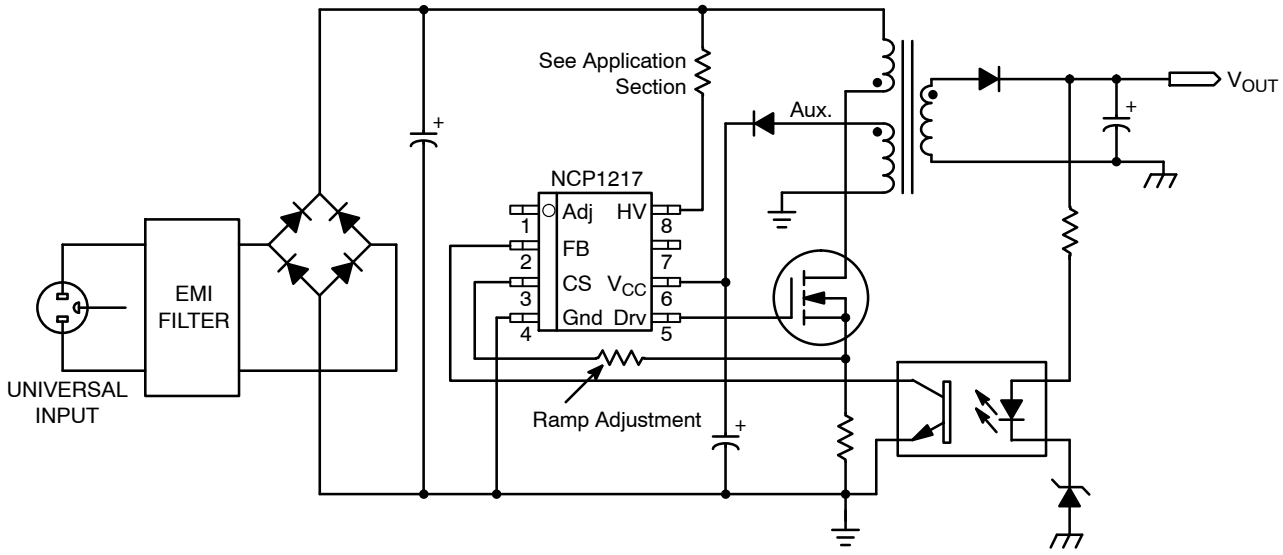

Figure 1. Typical Application Example

PIN FUNCTION DESCRIPTION

Pin No.	Pin Name	Function	Description
1	Adj	Adjust the skipping peak current	This pin lets you adjust the level at which the cycle skipping process takes place. Shorting this pin to ground permanently disables the skip cycle feature. By bringing this pin above 3.1 V, you permanently shut off the device.
2	FB	Sets the peak current setpoint	By connecting an optocoupler to this pin, the peak current setpoint is adjusted accordingly to the output power demand.
3	CS	Current sense input	This pin senses the primary current and routes it to the internal comparator via an L.E.B. By inserting a resistor in series with the pin, you control the amount of ramp compensation you need.
4	GND	The IC ground	–
5	Drv	Driving pulses	The driver's output to an external MOSFET.
6	V_{CC}	Supplies the IC	This pin is connected to an external bulk capacitor of typically 22 μF.
7	NC	–	This unconnected pin ensures adequate creepage distance.
8	HV	Ensures a clean and lossless startup sequence	Connected to the high−voltage rail, this pin injects a constant current into the V_{CC} capacitor during the startup sequence.

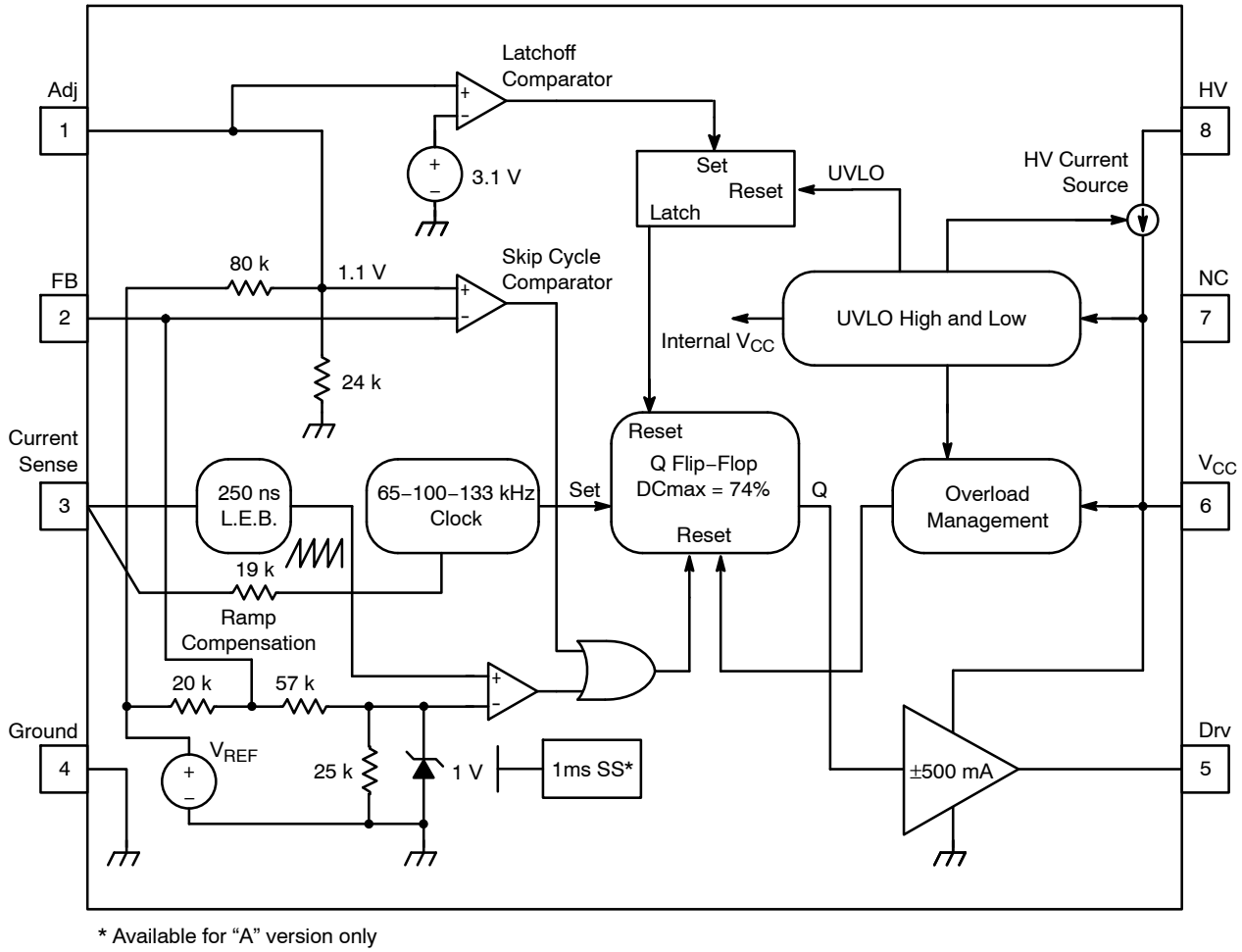

* Available for “A” version only

Figure 2. Internal Circuit Architecture

MAXIMUM RATINGS

Rating	Symbol	Value	Unit
Power Supply Voltage	V_{CC}	16	V
Power Supply Voltage on All Other Pins Except Pin 8 (HV), Pin 6 (V_{CC}) and Pin 5 (Drv)	–	−0.3 to 10	V
Maximum Voltage on Pin 8 (HV), Pin 6 (V_{CC}) Decoupled to Ground with 10 μF	V_{HV}	500	V
Maximum Voltage on Pin 8 (HV), Pin 6 (V_{CC}) Grounded	V_{HV}	450	V
Minimum Operating Voltage on Pin 8 (HV)		28	V
Maximum Current into All Pins Except V_{CC} (6) and HV (8) when 10 V ESD Diodes are Activated	–	5.0	mA
Thermal Resistance, Junction−to−Case	$R_{\theta JC}$	57	°C/W
Thermal Resistance, Junction−to−Air, PDIP−7 Version Thermal Resistance, Junction−to−Air, SO−8 Version	$R_{\theta JA}$ $R_{\theta JA}$	100 178	°C/W
Maximum Junction Temperature	T_{JMAX}	150	°C
Temperature Shutdown	–	155	°C
Hysteresis in Shutdown	–	30	°C
Storage Temperature Range	–	−60 to +150	°C
ESD Capability, HBM Model (All Pins Except V_{CC} and HV)	–	2.0	kV
ESD Capability, Machine Model	–	200	V

Stresses exceeding those listed in the Maximum Ratings table may damage the device. If any of these limits are exceeded, device functionality should not be assumed, damage may occur and reliability may be affected.

1. This device series contains ESD protection rated using the following tests:
   Human Body Model (HBM) 2000 V per JEDEC Standard JESD22, Method A114E.
   Machine Model (MM) 200 V per JEDEC Standard JESD22, Method A115A.

ELECTRICAL CHARACTERISTICS (For typical values T_J = 25°C, for min/max values T_J = 0°C to +125°C, Max T_J = 150°C, V_{CC} = 11 V unless otherwise noted.)

Characteristic	Pin	Symbol	Min	Typ	Max	Unit
SUPPLY SECTION (All frequency versions, unless otherwise noted)						
Turn−On Threshold Level, V_{CC} Going Up	6	VCC_{ON}	11.8	12.8	13.8	V
Minimum Operating Voltage After Turn−On	6	VCC_{min}	6.9	7.6	8.3	V
V_{CC} Decreasing Level at which the Latchoff Phase Ends	6	VCC_{latch}	–	5.6	–	V
Internal IC Consumption, No Output Load on Pin 5, F_{SW} = 65 kHz	6	ICC1	–	960	1110 (Note 1)	μA
Internal IC Consumption, No Output Load on Pin 5, F_{SW} = 100 kHz	6	ICC1	–	1020	1180 (Note 1)	μA
Internal IC Consumption, No Output Load on Pin 5, F_{SW} = 133 kHz	6	ICC1	–	1060	1200 (Note 1)	μA
Internal IC Consumption, 1.0 nF Output Load on Pin 5, F_{SW} = 65 kHz	6	ICC2	–	1.7	2.0 (Note 1)	mA
Internal IC Consumption, 1.0 nF Output Load on Pin 5, F_{SW} = 100 kHz	6	ICC2	–	2.1	2.4 (Note 1)	mA
Internal IC Consumption, 1.0 nF Output Load on Pin 5, F_{SW} = 133 kHz	6	ICC2	–	2.4	2.9 (Note 1)	mA
Internal IC Consumption, Latchoff Phase, V_{CC} = 6.0 V	6	ICC3	–	230	–	μA
INTERNAL STARTUP CURRENT SOURCE (T_J > 0°C)						
High−Voltage Current Source, V_{CC} = 10 V	8	IC1	3.5 (Note 2)	6.0	7.8	mA
High−Voltage Current Source, V_{CC} = 0	8	IC2	–	7.0	–	mA
DRIVE OUTPUT						
Output Voltage Rise−Time @ CL = 1.0 nF, 10−90% of a 12 V Output Signal	5	T_r	–	60	–	ns
Output Voltage Fall−Time @ CL = 1.0 nF, 10−90% of a 12 V Output Signal	5	T_f	–	20	–	ns
Source Resistance	5	R_{OH}	15	20	35	Ω
Sink Resistance	5	R_{OL}	5.0	10	18	Ω
CURRENT COMPARATOR (Pin 5 Unloaded)						
Input Bias Current @ 1.0 V Input Level on Pin 3	3	I_{IB}	–	0.02	–	μA
Maximum Internal Current Setpoint	3	I_{Limit}	0.9	1.0	1.1	V
Default Internal Current Setpoint for Skip Cycle Operation	3	I_{Lskip}	–	330	–	mV
Propagation Delay from Current Detection to Gate OFF State	3	T_{DEL}	–	90	150	ns
Leading Edge Blanking Duration	3	T_{LEB}	–	250	–	ns
INTERNAL OSCILLATOR (V_{CC} = 11 V, Pin 5 Loaded by 1.0 kΩ)						
Oscillation Frequency, 65 kHz Version	–	f_{OSC}	58.5	65	71.5	kHz
Oscillation Frequency, 100 kHz Version	–	f_{OSC}	90	100	110	kHz
Oscillation Frequency, 133 kHz Version	–	f_{OSC}	120	133	146	kHz
Maximum Duty−Cycle, NCP1217	–	Dmax	69	74	80	%
Maximum Duty−Cycle, NCP1217A	–	Dmax	42	46.5	50	%

Product parametric performance is indicated in the Electrical Characteristics for the listed test conditions, unless otherwise noted. Product performance may not be indicated by the Electrical Characteristics if operated under different conditions.

1. Maximum Value @ T_J = 0°C.
2. Minimum Value @ T_J = 125°C.

ELECTRICAL CHARACTERISTICS (continued) (For typical values T_J = 25°C, for min/max values T_J = 0°C to +125°C, Max T_J = 150°C, V_{CC} = 11 V unless otherwise noted.)

Characteristic	Pin	Symbol	Min	Typ	Max	Unit
FEEDBACK SECTION (V_{CC} = 11 V, Pin 5 Loaded by 1.0 kΩ)						
Internal Pull−Up Resistor	2	Rup	–	19	–	kΩ
Pin 2 (FB) to Internal Current Setpoint Division Ratio	–	Iratio	–	3.3	–	–
SKIP CYCLE GENERATION						
Default Skip Mode Level	1	Vskip	0.93	1.1	1.26	V
Pin 1 Internal Output Impedance	1	Zout	–	27	–	kΩ
INTERNAL RAMP COMPENSATION						
Internal Ramp Level @ 25°C (Note 3)	3	Vramp	2.6	2.9	3.2	V
Internal Ramp Resistance to CS Pin	3	Rramp	–	19	–	kΩ
ADJUSTMENT LATCHOFF LEVEL						
Latching Level	1	Vlatch	2.69	3.10	3.42	V

Product parametric performance is indicated in the Electrical Characteristics for the listed test conditions, unless otherwise noted. Product performance may not be indicated by the Electrical Characteristics if operated under different conditions.

3. A 1.0 MΩ resistor is connected to the ground for the measurement.

TYPICAL CHARACTERISTICS

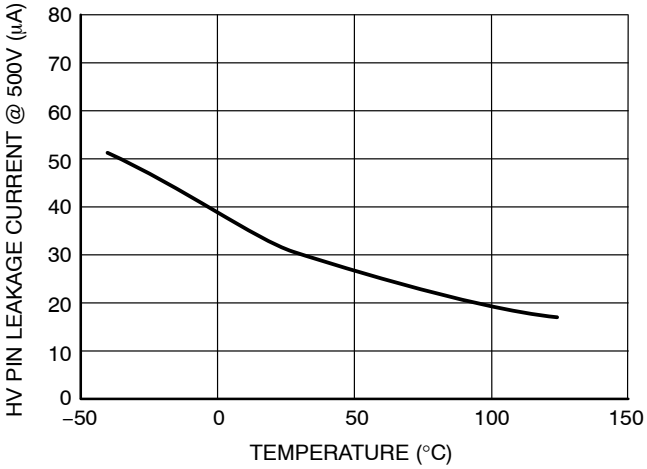

Figure 3. High Voltage Pin Leakage Current vs. Temperature

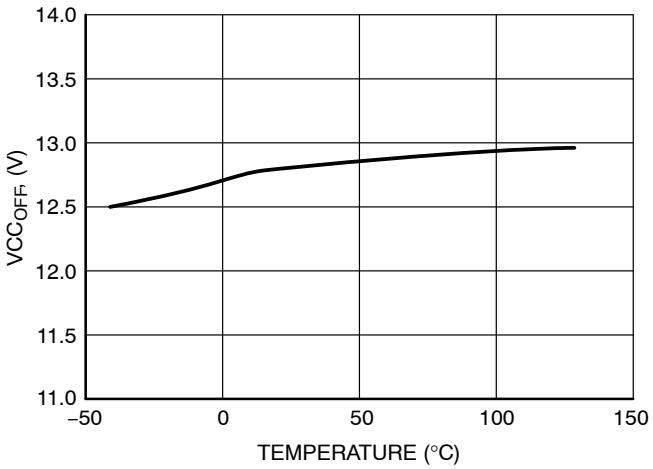

Figure 4. VCC_{OFF} vs. Temperature

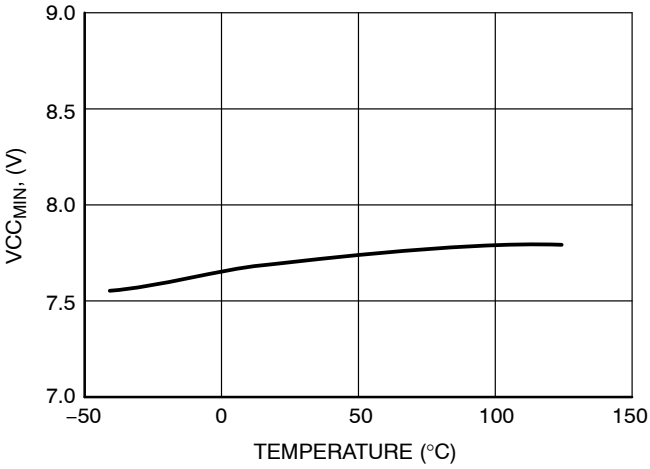

Figure 5. VCC_{MIN} vs. Temperature

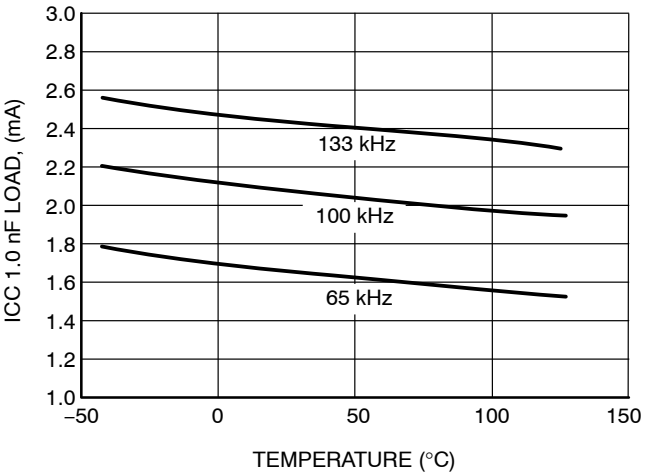

Figure 6. ICC 1.0 nF Load vs. Temperature

TYPICAL CHARACTERISTICS (continued)

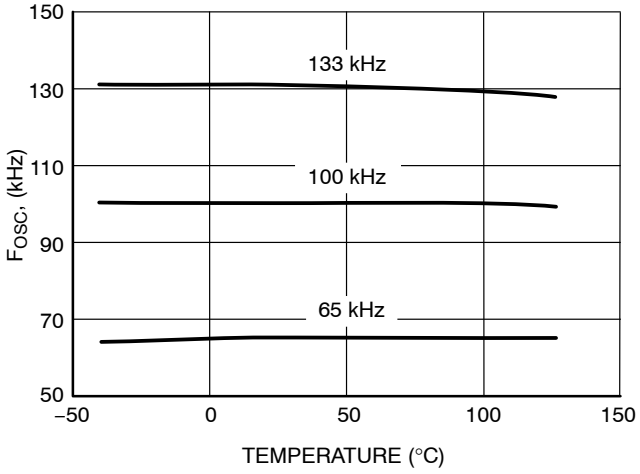

Figure 7. Switching Frequency vs. Temperature

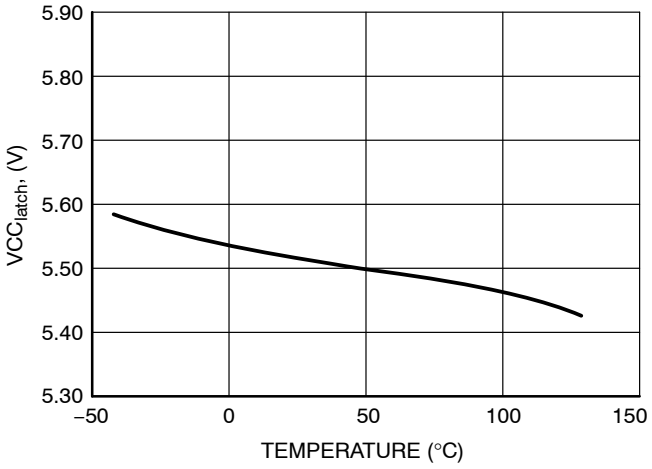

Figure 8. VCC_{latch} vs. Temperature

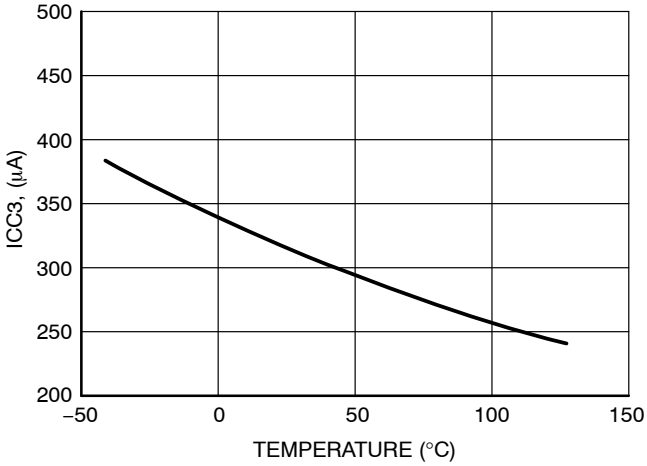

Figure 9. ICC3 vs. Temperature

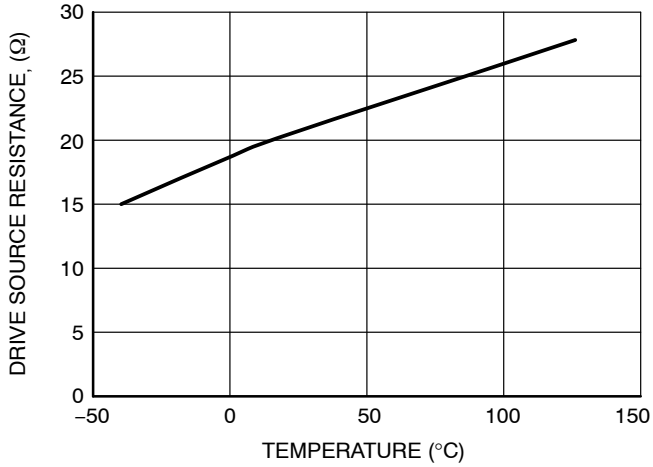

Figure 10. Drive Source Resistance vs. Temperature

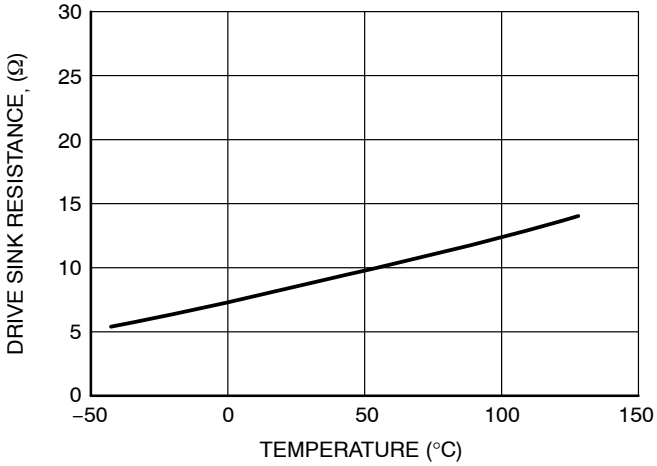

Figure 11. Drive Sink Resistance vs. Temperature

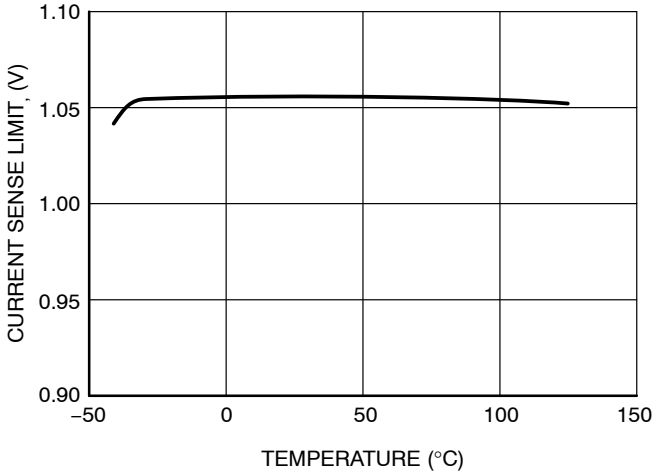

Figure 12. Current Sense Limit vs. Temperature

TYPICAL CHARACTERISTICS (continued)

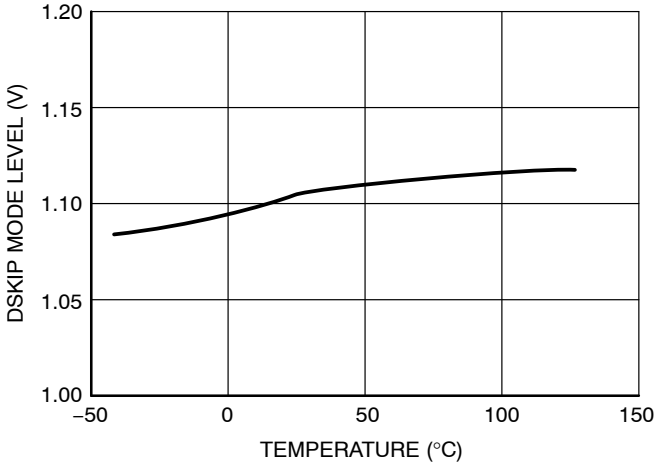

Figure 13. Skip Mode Level vs. Temperature

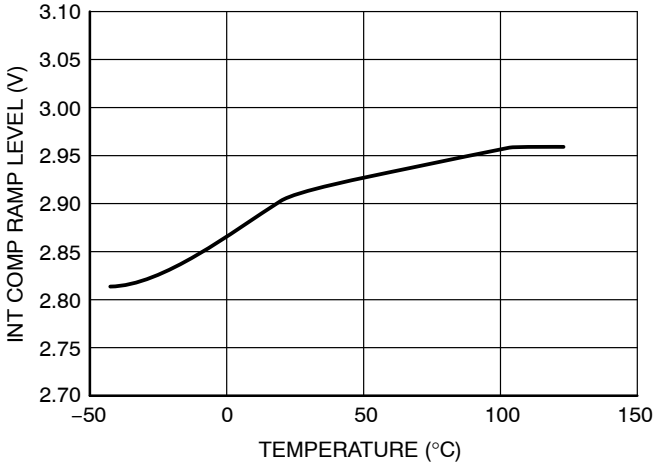

Figure 14. Int Comp Ramp Max Level vs. Temperature

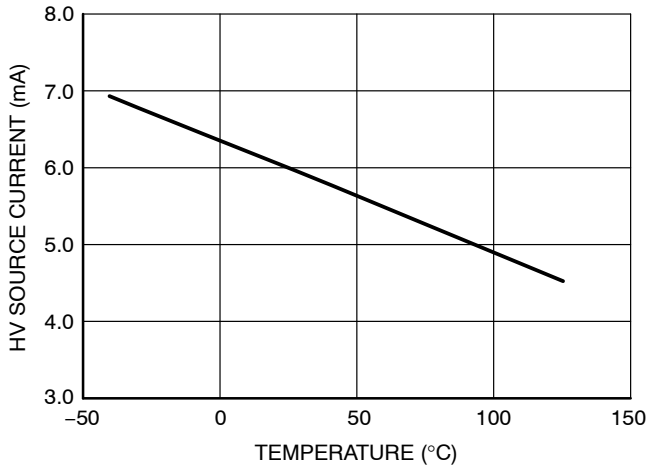

Figure 15. High Voltage Current Source (@ V_{CC} = 10V) vs. Temperature

APPLICATION INFORMATION

Introduction

The NCP1217 implements a standard current mode architecture where the switch−off event is dictated by the peak current setpoint. This component represents the ideal candidate where low part−count is the key parameter, particularly in low−cost AC/DC adapters, TV power supplies, etc. Due to its high−performance High−Voltage technology, the NCP1217 incorporates all the necessary components normally needed in UC384X based supplies: timing components, feedback devices, low−pass filter and startup device but also enhances the original component by offering: 1) an externally triggerable latchoff 2) ramp compensation and finally, 3) short−circuit protection. Due to its high−voltage current source, ON Semiconductor's NCP1217 does not need an external startup resistance but supplies the startup current directly from the high−voltage rail. On the other hand, more and more applications are requiring low no−load standby power, e.g. for AC/DC adapters, VCRs, etc. UC384X series have a lot of difficulty to reduce the switching losses at low power levels. NCP1217 elegantly solves this problem by skipping unwanted switching cycles at a user−adjustable power level. By ensuring that skip cycles take place at low peak current, the device ensures quiet, noise−free operation:

Current−Mode Operation: As the UC384X series, the NCP1217 features a well−known current mode control architecture which provides superior input audio−susceptibility compared to traditional voltage−mode controllers. Primary current pulse−by−pulse checking together with a fast over current comparator offers greater security in the event of a difficult fault condition, e.g. a saturating transformer.

Ramp Compensation: By inserting a resistor between the current−sense (CS) pin and the actual sense resistor, it becomes possible to inject a given amount of ramp compensation since the internal saw tooth clock is routed to the CS pin. Subharmonic oscillations in Continuous Conduction Mode (CCM) can thus be compensated via a single resistor.

Adjustable Skip Cycle Level: By offering the ability to tailor the level at which the skip cycle takes place, the designer can make sure that the skip operation only occurs at low peak current. This point guarantees a noise−free operation with cheap transformers. Skip cycle offers a proven mean to reduce the standby power in no or light loads situations.

Wide Switching−Frequency Offer: Three different options are available: 65 kHz – 100 kHz–133 kHz. Depending on the application, the designer can pick up the right device to help reducing magnetics or improve the EMI signature before reaching the 150 kHz starting point.

Overcurrent Protection (OCP): By continuously monitoring the V_{CC} auxiliary winding voltage, NCP1217 enters burst mode as soon as the power supply undergoes an overload: when the V_{CC} voltage goes down until it crosses the undervoltage lockout level (VCC_{min}). When the NCP1217 reaches this level (typically 7.6 V), it stops the switching pulses until the V_{CC} pin voltage reaches VCC_{latch} (5.6 V). At VCC_{latch}, the NCP1217 attempts to restart. As soon as the default disappears, the power supply resumes operation.

Overvoltage Protection (OVP): If pin1 is brought to a level higher than the internal 3.2 V reference voltage, the controller is permanently shut down until the user cycles the VCC OFF and ON again. This allows the building of efficient and low−cost over voltage protection circuits.

Wide Duty−Cycle Operation: Wide mains operation requires a large duty−cycle excursion. The NCP1217 can go up to 74% typically.

Low Standby−Power: If SMPS naturally exhibit a good efficiency at nominal load, they begin to be less efficient when the output power demand diminishes. By skipping unneeded switching cycles, the NCP1217 drastically reduces the power wasted during light load conditions. In no−load conditions, the NPC1217 allows the total standby power to easily reach next International Energy Agency (IEA) recommendations.

No Acoustic Noise While Operating: Instead of skipping cycles at high peak currents, the NCP1217 waits until the peak current demand falls below a user−adjustable 1/3 of the maximum limit. As a result, cycle skipping can take place without having a singing transformer … You can thus select cheap magnetic components free of noise problems.

External MOSFET Connection: By leaving the external MOSFET external to the IC, you can select avalanche proof devices, which in certain cases (e.g. low output powers), let you work without an active clamping network. Also, by controlling the MOSFET gate signal flow, you have an option to slow down the device commutation, therefore reducing the amount of ElectroMagnetic Interference (EMI).

SPICE Model: A dedicated model to run transient cycle−by−cycle simulations is available but also an averaged version to help you closing the loop. Ready−to−use templates can be downloaded in OrCAD's Pspice and INTUSOFT's IsSpice from ON Semiconductor web site, NCP1217 related section.

Startup Sequence

When the power supply is first powered from the mains outlet, the internal current source (typically 7.0 mA) is biased and charges up the V_{CC} capacitor. When the voltage on this V_{CC} capacitor reaches the VCC_{ON} level (typically 12.8 V), the current source turns off and no longer wastes any power. At this time, the V_{CC} capacitor only supplies the controller and the auxiliary supply is supposed to take over before V_{CC} collapses below VCC_{min}. Figure 16 shows the internal arrangement of this structure.

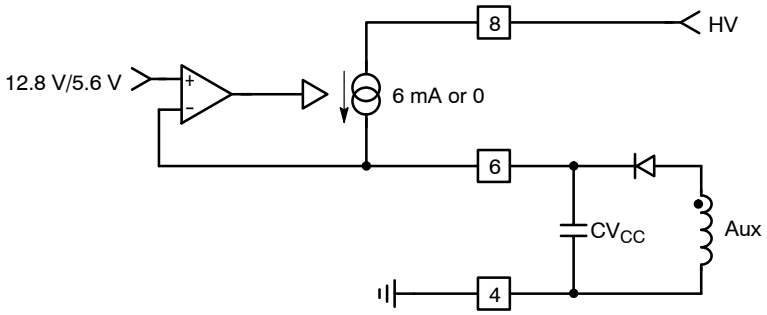

Figure 16. The Current Source Brings V_{CC} Above 12.8 V and then Turns Off

Once the power supply has started, the V_{CC} shall be constrained below 16 V, which is the maximum rating on Pin 6. Figure 17 portrays a typical startup sequence with a V_{CC} regulated at 12.5 V.

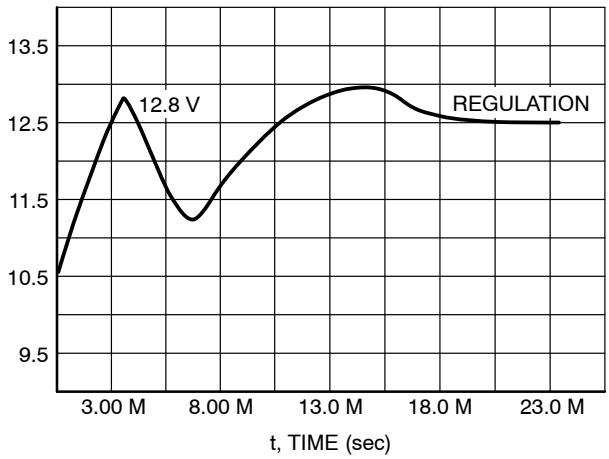

Figure 17. A Typical Startup Sequence for the NCP1217

Overload Operation

In applications where the output current is purposely not controlled (e.g. wall adapters delivering raw DC level), it is interesting to implement a true short−circuit protection. A short−circuit actually forces the output voltage to be at a low level, preventing a bias current to circulate in the optocoupler LED. As a result, the auxiliary voltage also decreases because it also operates in Flyback and thus duplicates the output voltage, providing the leakage inductance between windings is kept low. To account for this situation and properly protect the power supply, NCP1217 hosts a dedicated overload detection circuitry. Once activated, this circuitry imposes to deliver pulses in a burst manner with a low duty−cycle. The system auto−recovers when the fault condition disappears.

During the startup phase, the peak current is pushed to the maximum until the output voltage reaches its target and the feedback loop takes over. The auxiliary voltage takes place after a few switching cycles and self−supplies the IC. In presence of a short circuit on the output, the auxiliary voltage will go down until it crosses the undervoltage lockout level of typically 7.6 V. When this happens, NCP1217 immediately stops the switching pulses and unbiases all unnecessary logical blocks. The overall consumption drops, while keeping the gate grounded, and the V_{CC} slowly falls down. As soon as V_{CC} reaches typically 5.6 V, the startup source turns−on again and a new startup sequence occurs, bringing V_{CC} toward 12.8 V as an attempt to restart. If the default has gone, then the power supply normally restarts. If not, a new protective burst is initiated, shielding the SMPS from any runaway. Figure 18 portrays the typical operating signals in short circuit.

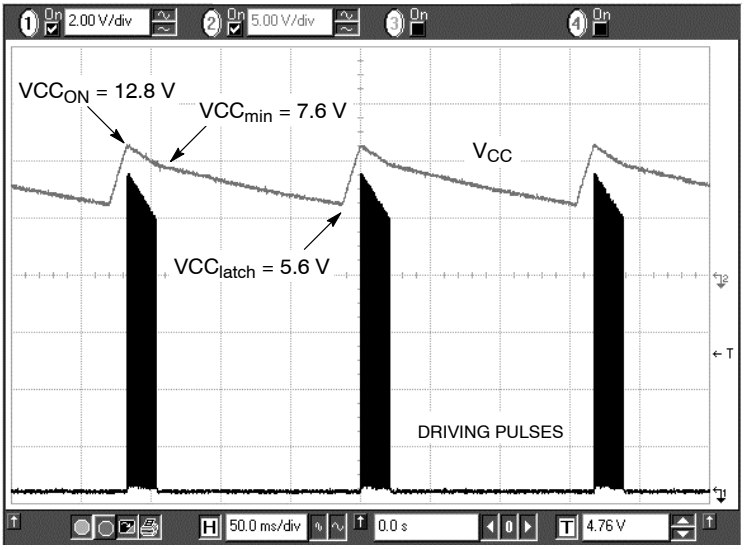

Figure 18. Typical Waveforms in Short Circuit Conditions

Calculating the V_{CC} Capacitor

The V_{CC} capacitor can be calculated knowing the IC consumption as soon as V_{CC} reaches 12.8 V. Suppose that a NCP1217P065 is used and drives a MOSFET with a 30 nC total gate charge (Qg). The total average current is thus made of ICC1 (750 μA) plus the driver current, $Fsw * Qg = 1.95$ mA. The total current is therefore 2.7 mA. The ΔV available to fully startup the circuit (e.g. never reach the 8.2 V VCC_{min} during power on) is $13.7–8.2 = 5.5$ V best case or 4.9 V worse case (11.9–7.0). We have a capacitor that then needs to supply the NCP1217 with 2.7 mA during a given time until the auxiliary supply takes over. Suppose that this time was measured at around 15 ms. CV_{CC} is calculated using the equation $C = \frac{\Delta t \cdot i}{\Delta V}$ or $C \geq 8.3$ μF. Select a 22 μF/25 V and this will fit.

Skipping Cycle Mode

The NCP1217 automatically skips switching cycles when the output power demand drops below a given level. This is accomplished by monitoring the FB pin. In normal operation, pin 2 imposes a peak current accordingly to the load value. If the load demand decreases, the internal loop asks for less peak current. When this setpoint reaches a determined level (Vpin 1), the IC prevents the current from decreasing further down and starts to blank the output pulses: the IC enters the so−called skip cycle mode, also named controlled burst operation. The power transfer now depends upon the width of the pulse bunches (Figure 20). Suppose we have the following component values:

Lp, primary inductance = 350 μH
Fsw, switching frequency = 65 kHz
Ip skip = 600 mA (or 333 mV/Rsense)

The theoretical power transfer is therefore: $\frac{1}{2} \cdot Lp \cdot Ip^2 \cdot Fsw = 4.1$ W. If this IC enters skip cycle mode with a bunch length of 10 ms over a recurrent period of 100 ms, then the total power transfer is: $4.1 * 0.1 = 410$ mW.

To better understand how this skip cycle mode takes place, a look at the operation mode versus the FB level immediately gives the necessary insight.

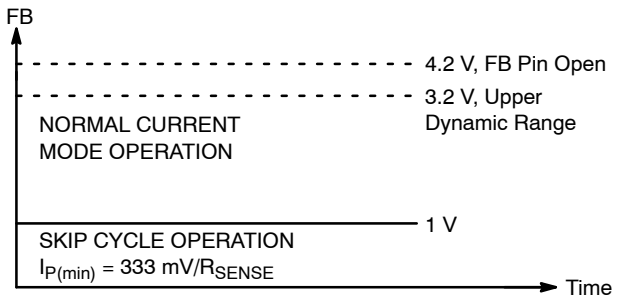

Figure 19.

When FB is above the skip cycle threshold (1.0 V by default), the peak current cannot exceed 1.0 V/Rsense. When the IC enters the skip cycle mode, the peak current cannot go below Vpin1/3.3. The user still has the flexibility to alter this 1.0 V by either shunting pin 1 to ground through a resistor or raising it through a resistor up to the desired level. In this later case, care must be taken to keep sufficient margin between this pin 1 adjustment level and the latchoff level. Grounding pin 1 permanently invalidates the skip cycle operation.

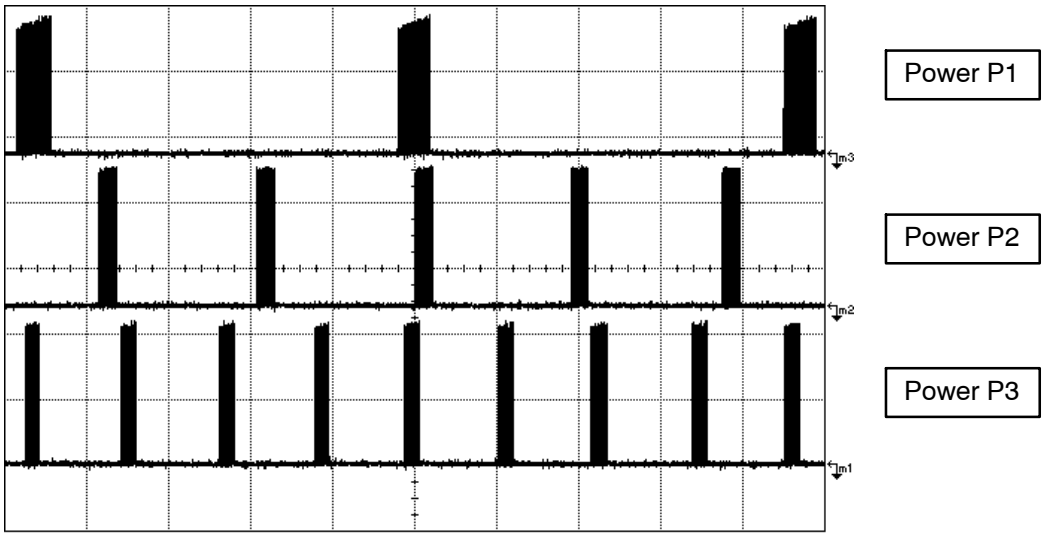

Figure 20. Output Pulses at Various Power Levels (X = 5.0 μs/div) P1 < P2 < P3

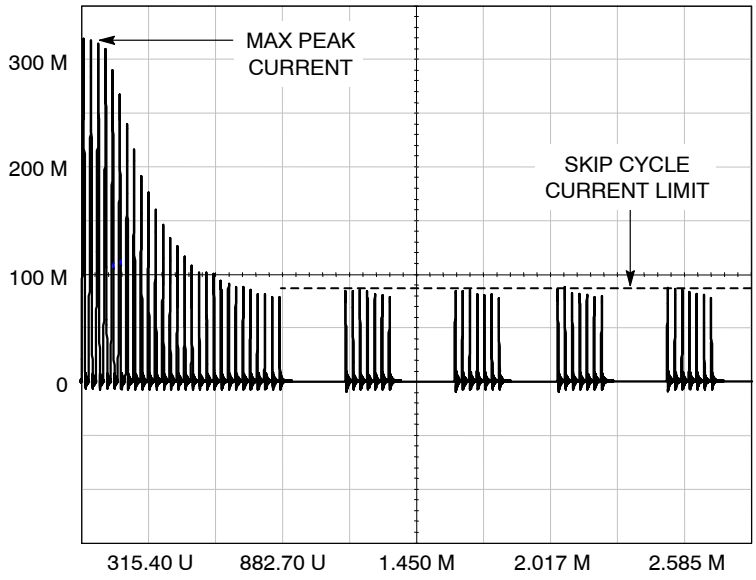

Figure 21. The Skip Cycle Takes Place at Low Peak Currents which Guarantees Noise−Free Operation

Sufficient margin shall be kept between normal Pin1 level and the latchoff point in order to avoid false triggering.

Ramp Compensation

Ramp compensation is a known mean to cure subharmonic oscillations. These oscillations take place at half the switching frequency and occur only during Continuous Conduction Mode (CCM) with a duty−cycle greater than 50%. To lower the current loop gain, one usually injects between 50 and 100% of the inductor down−slope. Figure 22 depicts how internally the ramp is generated.

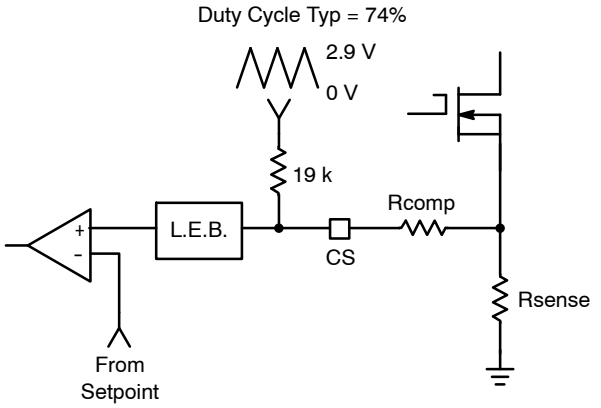

Figure 22. Inserting a Resistor in Series with the Current Sense Information Brings Ramp Compensation

In the NCP1217, the ramp features a swing of 2.9 V with a duty cycle max at 74%. Over a 65 kHz frequency, for instance, it corresponds to a 254 mV/µs ramp. In our FLYBACK design, let's suppose that our primary inductance Lp is 350 µH, delivering 12 V with a Np:Ns ratio of 1:0.1. The OFF time primary current slope is thus given by: $\frac{(Vout + Vf) \cdot \frac{Np}{Ns}}{Lp} = 371\ mA/\mu s$ or $37\ mV/\mu s$ when projected over an Rsense of 0.1 Ω, for instance. If we select 75% of the downslope as the required amount of ramp compensation, then we shall inject 27 mV/µs. Our internal compensation being of 254 mV/µs, the divider ratio (*divratio*) between Rcomp and the 19 kΩ is 0.106. A few lines of algebra to determine Rcomp: $\frac{19\ k \cdot divratio}{(1-divratio)} = 2.26\ k\Omega$.

Latching Off the NCP1217

Total latched shutdown can easily be implemented through a simple PNP bipolar transistor as depicted by Figure 23. When OFF, Q1 is transparent to the operation. When forward biased, the transistor pulls the Adj pin toward V_{CC} and permanently latches−off the IC as soon Vadj goes above the latching level (typical 3.1 V). Figure 23 shows how to wire the bipolar transistor to activate the latchoff. A typical candidate for Q1 could be an MMBT3906 from ON Semiconductor.

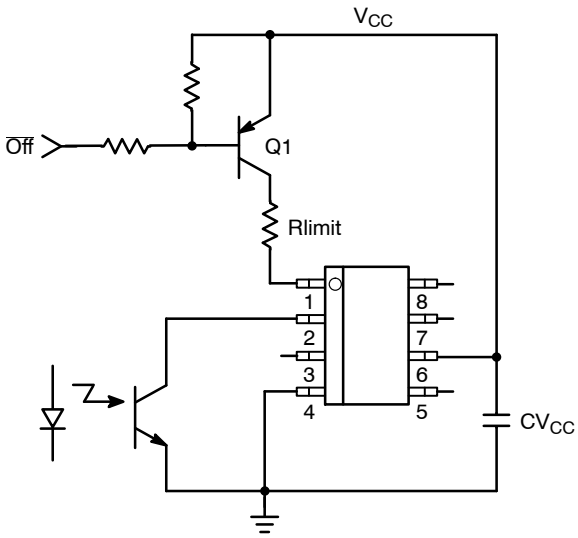

Figure 23. A Simple Bipolar Transistor Totally Disables the IC

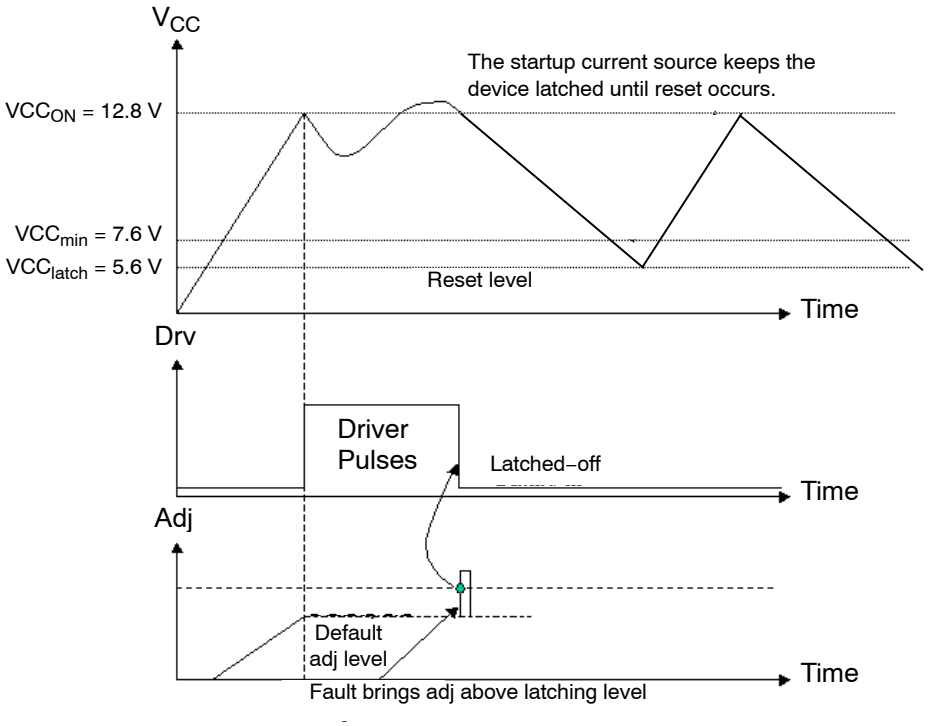

Figure 24. When Vadj is Pulled Above 3.1 V, NCP1217 Permanently Latches−Off the Output Pulses

In normal operation, the Adj pin level is kept at a fixed level, the default one or lower. As soon as some external signal pulls this Adj pin level above 3.1 V typical, the output pulses are permanently disabled. Care must be taken to limit the injected current into pin 1 to less than 2.0 mA, e.g. through a series resistor of 5.6 k with a 10 V V_{CC}. The startup switch is activated every time V_{CC} reaches 5.6 V and maintains a V_{CC} voltage ramping up and down between 5.6 V and 12.8 V. Reset occurs when V_{CC} falls below 5.6 V, e.g. when the user cycle the SMPS down. Figure 25 illustrates the operation. Adding a zener diode from Q1 base to ground makes a cheap OVP, protecting the supply from any lethal open−loop operation. If a thermistor (NTC) is added in parallel with the Zener−diode, overtemperature protection is also ensured.

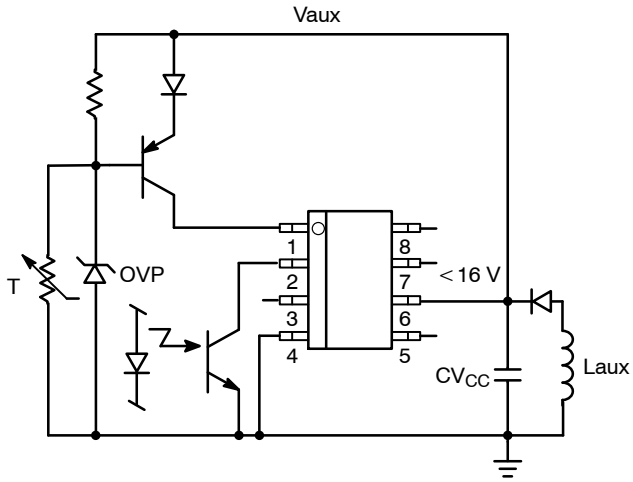

Figure 25. A Thermistor and a Zener Diode Offer Both OVP and Overtemperature Latched−Off Protection

Nonlatching Shutdown

In some cases, it might be desirable to shut off the part temporarily and authorize its restart once the default has disappeared. This option can easily be accomplished through a single NPN bipolar transistor wired between FB and ground. By pulling FB below the Adj Pin 1 level, the output pulses are disabled as long as FB is pulled below Pin 1. As soon as FB is relaxed, the IC resumes its operation. Figure 26 depicts the application example.

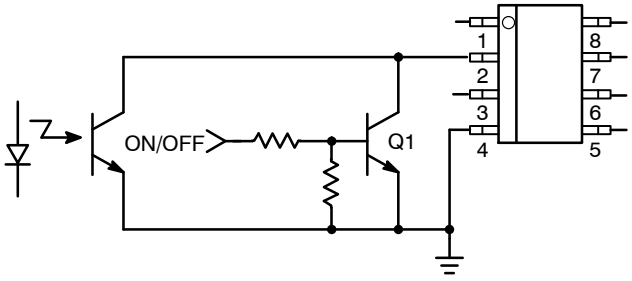

Figure 26. Another Way of Shutting Down the IC Without a Definitive Latchoff State

Protecting the Controller Against Negative Spikes

As with any controller built upon a CMOS technology, it is the designer's duty to avoid the presence of negative spikes on sensitive pins. Negative signals have the bad habit to forward bias the controller substrate and induce erratic behaviors. Sometimes, the injection can be so strong that internal parasitic SCRs are triggered, engendering irremediable damages to the IC if a low impedance path is offered between V_{CC} and GND. If the current sense pin is often the seat of such spurious signals, the high−voltage pin can also be the source of problems in certain circumstances. During the turn−off sequence, e.g. when the user unplugs the power supply, the controller is still fed by its V_{CC} capacitor and keeps activating the MOSFET ON and OFF with a peak current limited by Rsense. Unfortunately, if the quality coefficient Q of the resonating network formed by Lp and Cbulk is low (e.g. the MOSFET Rdson + Rsense are small), conditions are met to make the circuit resonate and thus negatively bias the controller. Since we are talking about ms pulses, the amount of injected charge (Q = I * t) immediately latches the controller that brutally discharges its V_{CC} capacitor. If this V_{CC} capacitor is of sufficient value, its stored energy damages the controller. Figure 27 depicts a typical negative shot occurring on the HV pin where the brutal V_{CC} discharge testifies for latchup.

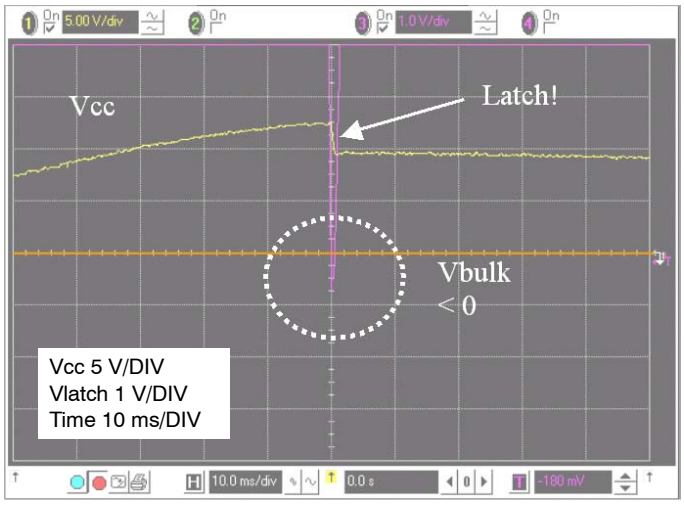

Figure 27. A Negative Spike Takes Place on the Bulk Capacitor at the Switch−Off Sequence

Simple and inexpensive cures exist to prevent from internal parasitic SCR activation. One of them consists in inserting a resistor in series with the high−voltage pin to keep the negative current to the lowest when the bulk becomes negative (Figure 28). Please note that the negative spike is clamped to (−2*Vf) thanks to the diode bridge. Also, the power dissipation of this resistor is extremely small since it only heats up during the startup sequence.

Another option (Figure 29) consists in wiring a diode from V_{CC} to the bulk capacitor to force V_{CC} to reach VCC_{ON} sooner and thus stops the switching activity before the bulk capacitor gets deeply discharged. For security reasons, two diodes can be connected in series.

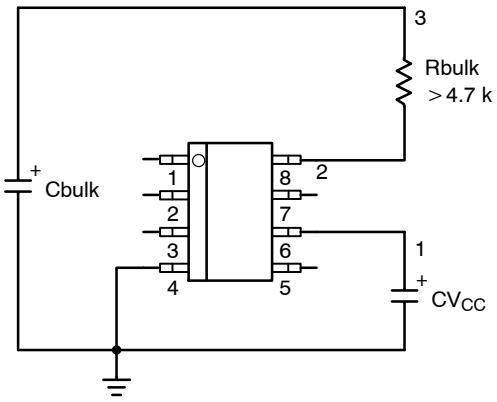

Figure 28. A simple resistor in series avoids any latch−up in the controller . . .

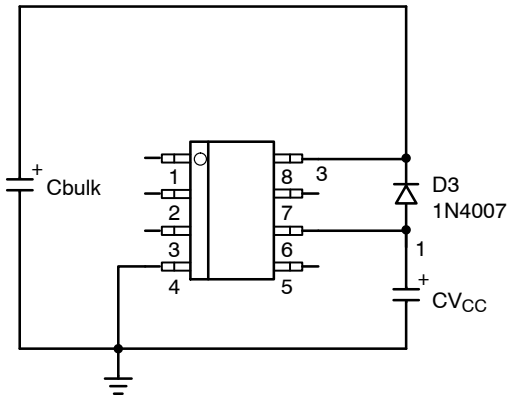

Figure 29. . . . or one diode forces V_{CC} to reach VCC_{ON} sooner.

Soft−Start (NCP1217A only)

The NCP1217A features an internal 1.0 ms soft−start activated during the power on sequence (PON). As soon as V_{CC} reaches VCC_{OFF}, the peak current is gradually increased from nearly zero up to the maximum clamping level (e.g. 1.0 V). This situation lasts during 1.0 ms and further to that time period, the peak current limit is blocked to 1.0 V until the supply enters regulation. The soft−start is also activated during the Over Current Burst (OCP) sequence. Every restart attempt is followed by a soft−start activation. Generally speaking, the soft−start will be activated when V_{CC} ramps up either from zero (fresh power−on sequence) or 5.6 V, the latchoff voltage occurring during OCP. Figure 30 portrays the soft−start behavior. The time scales are purposely shifted to offer a better zoom portion.

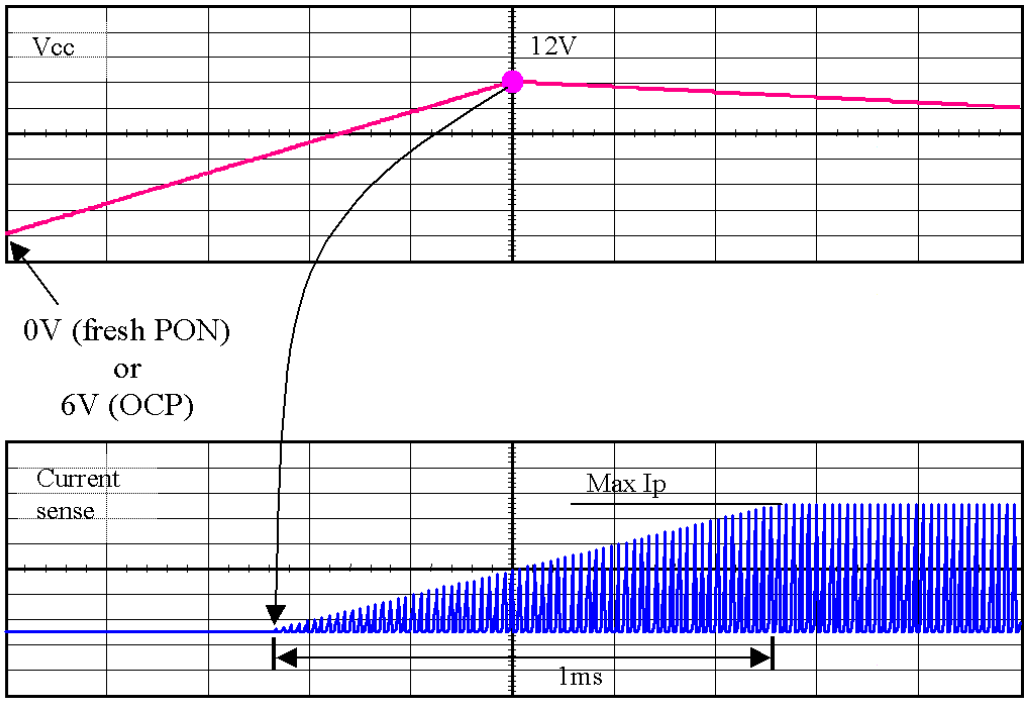

Figure 30. Soft−start is activated during a startup sequence or an OCP condition

ORDERING INFORMATION

Device	Version	Marking	Package	Shipping†
NCP1217D65R2G	65 kHz	17D06	SO−8 (Pb−Free)	2500 / Tape & Reel
NCP1217D100R2G	100 kHz	17D10	SO−8 (Pb−Free)	2500 / Tape & Reel
NCP1217D133R2G	133 kHz	17D13	SO−8 (Pb−Free)	2500 / Tape & Reel
NCP1217P65G	65 kHz	P1217P065	PDIP−7 (Pb−Free)	50 Units / Rail
NCP1217P100G	100 kHz	P1217P100	PDIP−7 (Pb−Free)	50 Units / Rail
NCP1217P133G	133 kHz	N1217P133	PDIP−7 (Pb−Free)	50 Units / Rail
NCP1217AD65R2G	65 kHz	17A06	SO−8 (Pb−Free)	2500 / Tape & Reel
NCP1217AD100R2G	100 kHz	17A10	SO−8 (Pb−Free)	2500 / Tape & Reel
NCP1217AD133R2G	133 kHz	17A13	SO−8 (Pb−Free)	2500 / Tape & Reel
NCP1217AP65G	65 kHz	1217AP06	PDIP−7 (Pb−Free)	50 Units / Rail
NCP1217AP100G	100 kHz	P1217AP10	PDIP−7 (Pb−Free)	50 Units / Rail
NCP1217AP133G	133 kHz	1217AP13	PDIP−7 (Pb−Free)	50 Units / Rail

†For information on tape and reel specifications, including part orientation and tape sizes, please refer to our Tape and Reel Packaging Specification Brochure, BRD8011/D.

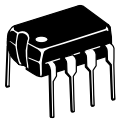

PDIP−7 (PDIP−8 LESS PIN 7)
CASE 626B
ISSUE D

DATE 22 APR 2015

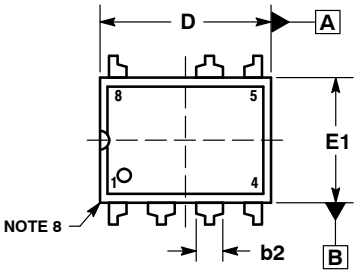

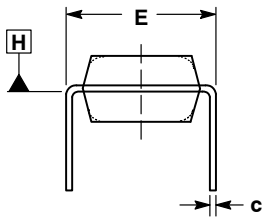

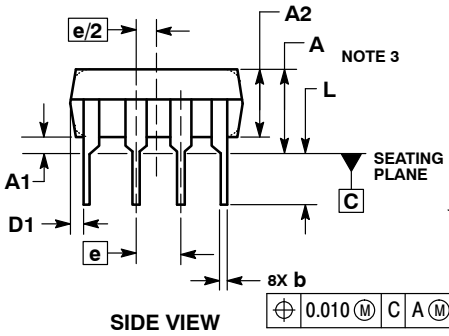

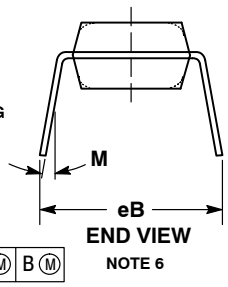

STYLE 1:
PIN 1. AC IN
2. DC + IN
3. DC − IN
4. AC IN
5. GROUND
6. OUTPUT
7. NOT USED
8. V_{CC}

NOTES:
1. DIMENSIONING AND TOLERANCING PER ASME Y14.5M, 1994.
2. CONTROLLING DIMENSION: INCHES.
3. DIMENSIONS A, A1 AND L ARE MEASURED WITH THE PACKAGE SEATED IN JEDEC SEATING PLANE GAUGE GS−3.
4. DIMENSIONS D, D1 AND E1 DO NOT INCLUDE MOLD FLASH OR PROTRUSIONS. MOLD FLASH OR PROTRUSIONS ARE NOT TO EXCEED 0.10 INCH.
5. DIMENSION E IS MEASURED AT A POINT 0.015 BELOW DATUM PLANE H WITH THE LEADS CONSTRAINED PERPENDICULAR TO DATUM C.
6. DIMENSION eB IS MEASURED AT THE LEAD TIPS WITH THE LEADS UNCONSTRAINED.
7. DATUM PLANE H IS COINCIDENT WITH THE BOTTOM OF THE LEADS, WHERE THE LEADS EXIT THE BODY.
8. PACKAGE CONTOUR IS OPTIONAL (ROUNDED OR SQUARE CORNERS).

	INCHES		MILLIMETERS	
DIM	MIN	MAX	MIN	MAX
A	----	0.210	---	5.33
A1	0.015	----	0.38	---
A2	0.115	0.195	2.92	4.95
b	0.014	0.022	0.35	0.56
b2	0.060 TYP		1.52 TYP	
C	0.008	0.014	0.20	0.36
D	0.355	0.400	9.02	10.16
D1	0.005	----	0.13	---
E	0.300	0.325	7.62	8.26
E1	0.240	0.280	6.10	7.11
e	0.100 BSC		2.54 BSC	
eB	----	0.430	---	10.92
L	0.115	0.150	2.92	3.81
M	----	10°	---	10°

GENERIC MARKING DIAGRAM*

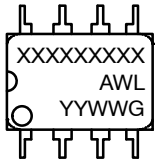

XXXX = Specific Device Code
A = Assembly Location
WL = Wafer Lot
YY = Year
WW = Work Week
G = Pb−Free Package

*This information is generic. Please refer to device data sheet for actual part marking. Pb−Free indicator, “G” or microdot “ ▪”, may or may not be present.

DOCUMENT NUMBER:	**98AON12198D**	Electronic versions are uncontrolled except when accessed directly from the Document Repository. Printed versions are uncontrolled except when stamped “CONTROLLED COPY” in red.
DESCRIPTION:	**PDIP−7 (PDIP−8 LESS PIN 7)**	**PAGE 1 OF 1**

onsemi and onsemi are trademarks of Semiconductor Components Industries, LLC dba **onsemi** or its subsidiaries in the United States and/or other countries. **onsemi** reserves the right to make changes without further notice to any products herein. **onsemi** makes no warranty, representation or guarantee regarding the suitability of its products for any particular purpose, nor does **onsemi** assume any liability arising out of the application or use of any product or circuit, and specifically disclaims any and all liability, including without limitation special, consequential or incidental damages. **onsemi** does not convey any license under its patent rights nor the rights of others.

© Semiconductor Components Industries, LLC, 2002



SCALE 1:1

SOIC−8 NB
CASE 751−07
ISSUE AK

DATE 16 FEB 2011

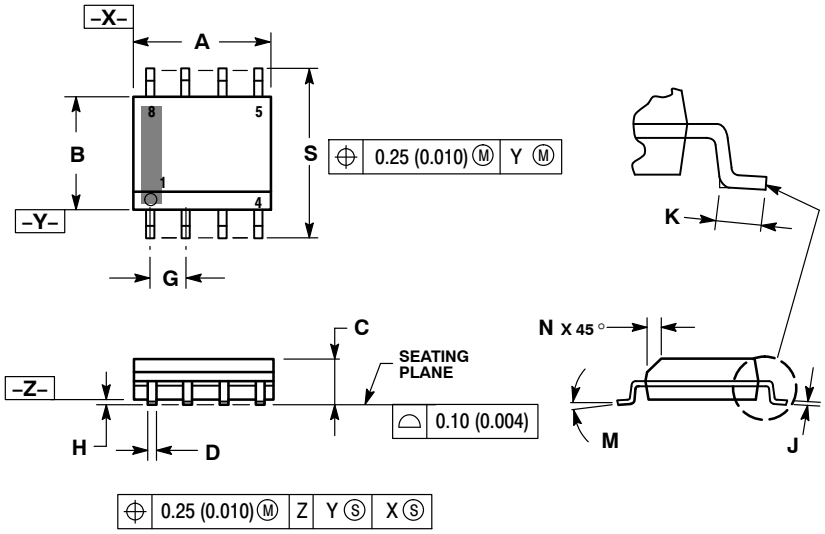

NOTES:
1. DIMENSIONING AND TOLERANCING PER ANSI Y14.5M, 1982.
2. CONTROLLING DIMENSION: MILLIMETER.
3. DIMENSION A AND B DO NOT INCLUDE MOLD PROTRUSION.
4. MAXIMUM MOLD PROTRUSION 0.15 (0.006) PER SIDE.
5. DIMENSION D DOES NOT INCLUDE DAMBAR PROTRUSION. ALLOWABLE DAMBAR PROTRUSION SHALL BE 0.127 (0.005) TOTAL IN EXCESS OF THE D DIMENSION AT MAXIMUM MATERIAL CONDITION.
6. 751−01 THRU 751−06 ARE OBSOLETE. NEW STANDARD IS 751−07.

	MILLIMETERS		INCHES	
DIM	MIN	MAX	MIN	MAX
A	4.80	5.00	0.189	0.197
B	3.80	4.00	0.150	0.157
C	1.35	1.75	0.053	0.069
D	0.33	0.51	0.013	0.020
G	1.27 BSC		0.050 BSC	
H	0.10	0.25	0.004	0.010
J	0.19	0.25	0.007	0.010
K	0.40	1.27	0.016	0.050
M	0°	8°	0°	8°
N	0.25	0.50	0.010	0.020
S	5.80	6.20	0.228	0.244

SOLDERING FOOTPRINT*

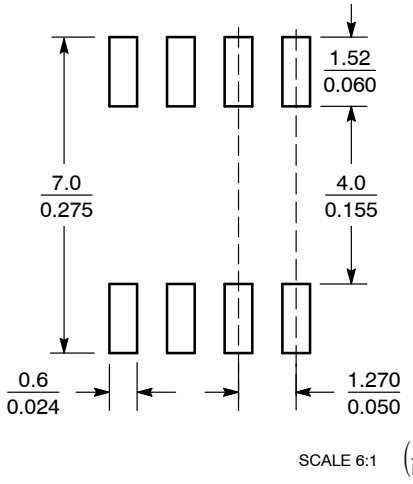

SCALE 6:1 (mm / inches)

*For additional information on our Pb−Free strategy and soldering details, please download the **onsemi** Soldering and Mounting Techniques Reference Manual, SOLDERRM/D.

GENERIC MARKING DIAGRAM*

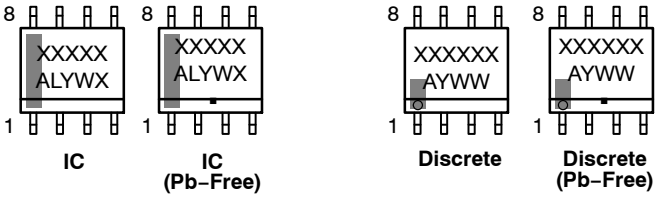

XXXXX = Specific Device Code
A = Assembly Location
L = Wafer Lot
Y = Year
W = Work Week
▪ = Pb−Free Package

XXXXXX = Specific Device Code
A = Assembly Location
Y = Year
WW = Work Week
▪ = Pb−Free Package

*This information is generic. Please refer to device data sheet for actual part marking. Pb−Free indicator, "G" or microdot "▪", may or may not be present. Some products may not follow the Generic Marking.

STYLES ON PAGE 2

DOCUMENT NUMBER:	**98ASB42564B**	Electronic versions are uncontrolled except when accessed directly from the Document Repository. Printed versions are uncontrolled except when stamped "CONTROLLED COPY" in red.	
DESCRIPTION:	**SOIC−8 NB**		**PAGE 1 OF 2**

onsemi and ONSEMI are trademarks of Semiconductor Components Industries, LLC dba **onsemi** or its subsidiaries in the United States and/or other countries. **onsemi** reserves the right to make changes without further notice to any products herein. **onsemi** makes no warranty, representation or guarantee regarding the suitability of its products for any particular purpose, nor does **onsemi** assume any liability arising out of the application or use of any product or circuit, and specifically disclaims any and all liability, including without limitation special, consequential or incidental damages. **onsemi** does not convey any license under its patent rights nor the rights of others.

SOIC−8 NB
CASE 751−07
ISSUE AK

DATE 16 FEB 2011

STYLE 1:
PIN 1. EMITTER
2. COLLECTOR
3. COLLECTOR
4. EMITTER
5. EMITTER
6. BASE
7. BASE
8. EMITTER

STYLE 2:
PIN 1. COLLECTOR, DIE, #1
2. COLLECTOR, #1
3. COLLECTOR, #2
4. COLLECTOR, #2
5. BASE, #2
6. EMITTER, #2
7. BASE, #1
8. EMITTER, #1

STYLE 3:
PIN 1. DRAIN, DIE #1
2. DRAIN, #1
3. DRAIN, #2
4. DRAIN, #2
5. GATE, #2
6. SOURCE, #2
7. GATE, #1
8. SOURCE, #1

STYLE 4:
PIN 1. ANODE
2. ANODE
3. ANODE
4. ANODE
5. ANODE
6. ANODE
7. ANODE
8. COMMON CATHODE

STYLE 5:
PIN 1. DRAIN
2. DRAIN
3. DRAIN
4. DRAIN
5. GATE
6. GATE
7. SOURCE
8. SOURCE

STYLE 6:
PIN 1. SOURCE
2. DRAIN
3. DRAIN
4. SOURCE
5. SOURCE
6. GATE
7. GATE
8. SOURCE

STYLE 7:
PIN 1. INPUT
2. EXTERNAL BYPASS
3. THIRD STAGE SOURCE
4. GROUND
5. DRAIN
6. GATE 3
7. SECOND STAGE Vd
8. FIRST STAGE Vd

STYLE 8:
PIN 1. COLLECTOR, DIE #1
2. BASE, #1
3. BASE, #2
4. COLLECTOR, #2
5. COLLECTOR, #2
6. EMITTER, #2
7. EMITTER, #1
8. COLLECTOR, #1

STYLE 9:
PIN 1. EMITTER, COMMON
2. COLLECTOR, DIE #1
3. COLLECTOR, DIE #2
4. EMITTER, COMMON
5. EMITTER, COMMON
6. BASE, DIE #2
7. BASE, DIE #1
8. EMITTER, COMMON

STYLE 10:
PIN 1. GROUND
2. BIAS 1
3. OUTPUT
4. GROUND
5. GROUND
6. BIAS 2
7. INPUT
8. GROUND

STYLE 11:
PIN 1. SOURCE 1
2. GATE 1
3. SOURCE 2
4. GATE 2
5. DRAIN 2
6. DRAIN 2
7. DRAIN 1
8. DRAIN 1

STYLE 12:
PIN 1. SOURCE
2. SOURCE
3. SOURCE
4. GATE
5. DRAIN
6. DRAIN
7. DRAIN
8. DRAIN

STYLE 13:
PIN 1. N.C.
2. SOURCE
3. SOURCE
4. GATE
5. DRAIN
6. DRAIN
7. DRAIN
8. DRAIN

STYLE 14:
PIN 1. N−SOURCE
2. N−GATE
3. P−SOURCE
4. P−GATE
5. P−DRAIN
6. P−DRAIN
7. N−DRAIN
8. N−DRAIN

STYLE 15:
PIN 1. ANODE 1
2. ANODE 1
3. ANODE 1
4. ANODE 1
5. CATHODE, COMMON
6. CATHODE, COMMON
7. CATHODE, COMMON
8. CATHODE, COMMON

STYLE 16:
PIN 1. EMITTER, DIE #1
2. BASE, DIE #1
3. EMITTER, DIE #2
4. BASE, DIE #2
5. COLLECTOR, DIE #2
6. COLLECTOR, DIE #2
7. COLLECTOR, DIE #1
8. COLLECTOR, DIE #1

STYLE 17:
PIN 1. VCC
2. V2OUT
3. V1OUT
4. TXE
5. RXE
6. VEE
7. GND
8. ACC

STYLE 18:
PIN 1. ANODE
2. ANODE
3. SOURCE
4. GATE
5. DRAIN
6. DRAIN
7. CATHODE
8. CATHODE

STYLE 19:
PIN 1. SOURCE 1
2. GATE 1
3. SOURCE 2
4. GATE 2
5. DRAIN 2
6. MIRROR 2
7. DRAIN 1
8. MIRROR 1

STYLE 20:
PIN 1. SOURCE (N)
2. GATE (N)
3. SOURCE (P)
4. GATE (P)
5. DRAIN
6. DRAIN
7. DRAIN
8. DRAIN

STYLE 21:
PIN 1. CATHODE 1
2. CATHODE 2
3. CATHODE 3
4. CATHODE 4
5. CATHODE 5
6. COMMON ANODE
7. COMMON ANODE
8. CATHODE 6

STYLE 22:
PIN 1. I/O LINE 1
2. COMMON CATHODE/VCC
3. COMMON CATHODE/VCC
4. I/O LINE 3
5. COMMON ANODE/GND
6. I/O LINE 4
7. I/O LINE 5
8. COMMON ANODE/GND

STYLE 23:
PIN 1. LINE 1 IN
2. COMMON ANODE/GND
3. COMMON ANODE/GND
4. LINE 2 IN
5. LINE 2 OUT
6. COMMON ANODE/GND
7. COMMON ANODE/GND
8. LINE 1 OUT

STYLE 24:
PIN 1. BASE
2. EMITTER
3. COLLECTOR/ANODE
4. COLLECTOR/ANODE
5. CATHODE
6. CATHODE
7. COLLECTOR/ANODE
8. COLLECTOR/ANODE

STYLE 25:
PIN 1. VIN
2. N/C
3. REXT
4. GND
5. IOUT
6. IOUT
7. IOUT
8. IOUT

STYLE 26:
PIN 1. GND
2. dv/dt
3. ENABLE
4. ILIMIT
5. SOURCE
6. SOURCE
7. SOURCE
8. VCC

STYLE 27:
PIN 1. ILIMIT
2. OVLO
3. UVLO
4. INPUT+
5. SOURCE
6. SOURCE
7. SOURCE
8. DRAIN

STYLE 28:
PIN 1. SW_TO_GND
2. DASIC_OFF
3. DASIC_SW_DET
4. GND
5. V_MON
6. VBULK
7. VBULK
8. VIN

STYLE 29:
PIN 1. BASE, DIE #1
2. EMITTER, #1
3. BASE, #2
4. EMITTER, #2
5. COLLECTOR, #2
6. COLLECTOR, #2
7. COLLECTOR, #1
8. COLLECTOR, #1

STYLE 30:
PIN 1. DRAIN 1
2. DRAIN 1
3. GATE 2
4. SOURCE 2
5. SOURCE 1/DRAIN 2
6. SOURCE 1/DRAIN 2
7. SOURCE 1/DRAIN 2
8. GATE 1

DOCUMENT NUMBER:	**98ASB42564B**	Electronic versions are uncontrolled except when accessed directly from the Document Repository. Printed versions are uncontrolled except when stamped "CONTROLLED COPY" in red.	
DESCRIPTION:	**SOIC−8 NB**		**PAGE 2 OF 2**

onsemi and ONSEMI are trademarks of Semiconductor Components Industries, LLC dba **onsemi** or its subsidiaries in the United States and/or other countries. **onsemi** reserves the right to make changes without further notice to any products herein. **onsemi** makes no warranty, representation or guarantee regarding the suitability of its products for any particular purpose, nor does **onsemi** assume any liability arising out of the application or use of any product or circuit, and specifically disclaims any and all liability, including without limitation special, consequential or incidental damages. **onsemi** does not convey any license under its patent rights nor the rights of others.

© Semiconductor Components Industries, LLC, 2019

onsemi, , and other names, marks, and brands are registered and/or common law trademarks of Semiconductor Components Industries, LLC dba "**onsemi**" or its affiliates and/or subsidiaries in the United States and/or other countries. **onsemi** owns the rights to a number of patents, trademarks, copyrights, trade secrets, and other intellectual property. A listing of **onsemi**'s product/patent coverage may be accessed at www.onsemi.com/site/pdf/Patent−Marking.pdf. **onsemi** reserves the right to make changes at any time to any products or information herein, without notice. The information herein is provided "as−is" and **onsemi** makes no warranty, representation or guarantee regarding the accuracy of the information, product features, availability, functionality, or suitability of its products for any particular purpose, nor does **onsemi** assume any liability arising out of the application or use of any product or circuit, and specifically disclaims any and all liability, including without limitation special, consequential or incidental damages. Buyer is responsible for its products and applications using **onsemi** products, including compliance with all laws, regulations and safety requirements or standards, regardless of any support or applications information provided by **onsemi**. "Typical" parameters which may be provided in **onsemi** data sheets and/or specifications can and do vary in different applications and actual performance may vary over time. All operating parameters, including "Typicals" must be validated for each customer application by customer's technical experts. **onsemi** does not convey any license under any of its intellectual property rights nor the rights of others. **onsemi** products are not designed, intended, or authorized for use as a critical component in life support systems or any FDA Class 3 medical devices or medical devices with a same or similar classification in a foreign jurisdiction or any devices intended for implantation in the human body. Should Buyer purchase or use **onsemi** products for any such unintended or unauthorized application, Buyer shall indemnify and hold **onsemi** and its officers, employees, subsidiaries, affiliates, and distributors harmless against all claims, costs, damages, and expenses, and reasonable attorney fees arising out of, directly or indirectly, any claim of personal injury or death associated with such unintended or unauthorized use, even if such claim alleges that **onsemi** was negligent regarding the design or manufacture of the part. **onsemi** is an Equal Opportunity/Affirmative Action Employer. This literature is subject to all applicable copyright laws and is not for resale in any manner.

ADDITIONAL INFORMATION

TECHNICAL PUBLICATIONS:
Technical Library: www.onsemi.com/design/resources/technical−documentation
onsemi Website: www.onsemi.com

ONLINE SUPPORT: www.onsemi.com/support
For additional information, please contact your local Sales Representative at www.onsemi.com/support/sales

ENTEGRECİ

Bu belge www.entegreci.com üzerinden sunulmaktadır.

Elektronik komponent tedarikinde Entegreci

Entegreci, Eskişehir merkezli, Türkiye geneline satış yapan bir elektronik komponent mağazasıdır. Entegreler (IC), mikrodenetleyiciler, transistörler, diyotlar, pasif elemanlar, konnektörler, modüller ve geliştirme kartları tek adetten seri üretim adetlerine kadar satılır. Ürün sayfalarında güncel stok durumunu, fiyatı ve datasheet bağlantısını bulabilirsiniz.

Parça koduyla arama

Üretici parça numarasını yazın; stok ve fiyatı hemen görün.

www.entegreci.com

Ürün kategorileri

Entegreden kapasitöre tüm elektronik komponent kategorileri.

Kategorilere göz atın

Üreticiler

Aradığınız üreticinin ürünlerini tek sayfada inceleyin.

Üreticileri görün

Toplu alım ve teklif

Listede olmayan ya da yüksek adetli parçalar için teklif isteyin.

Teklif isteyin

www.entegreci.com | **destek@entegreci.com** | **0850 305 90 34**

Entegreci is an online electronic components store based in Türkiye. Search by manufacturer part number to see stock, prices and datasheets for integrated circuits, microcontrollers, transistors, passive components and connectors, or request a quote for parts that are not listed.

Bu sayfa Entegreci tarafından eklenmiştir. Belgenin önceki sayfaları asıl yayıncısına aittir ve içeriği değiştirilmemiştir; en güncel sürüm için belgenin yayıncısına başvurun.