MIC38HC42/3/4/5

BiCMOS 1A Current-Mode PWM Controllers

General Description

The MIC38HC4x family are fixed frequency current-mode PWM controllers with 1A drive current capability. Micrel's BiCMOS devices are pin-compatible with 384x bipolar devices. Their high output drive, with fast rise and fall times, combined with low startup current make it an ideal PWM controller where high efficiency is required.

Undervoltage lockout circuitry allows the '42 and '44 versions to start up at 14.5V and operate down to 9V, and the '43 and '45 versions start at 8.4V with operation down to 7.6V. All versions operate up to 20V.

When compared to bipolar UC384x devices operating from a 15V supply, start-up current has been reduced to 50μA typical and operating current has been reduced to 4.0 mA typical. Decreased output rise and fall times drive larger MOSFETs, and rail-to-rail output capability increases efficiency, especially at lower supply voltages. The MIC38HC4x also features a trimmed oscillator discharge current and bandgap reference.

MIC38HC4x-1 is available in 14-pin plastic DIP and SOIC packages. 8-pin devices feature small size, while 14-pin devices separate the analog and power connections for improved performance and power dissipation.

Features

- Fast 20ns output rise and 15ns output fall times
- –40°C to +85°C temperature range exceeds UC284x specifications
- High-performance, low-power BiCMOS Process
- Ultralow start-up current (50μA typical)
- Low operating current (4mA typical)
- High output drive (1A peak current, HC version)
- CMOS outputs with rail-to-rail swing
- Current-mode operation up to 500kHz
- Trimmed 5V bandgap reference
- Pin-for-pin compatible with UC3842/3843/3844/3845(A)
- Trimmed oscillator discharge current
- UVLO with hysteresis
- Low cross-conduction currents

Applications

- Current-mode, off-line, switched-mode power supplies
- Current-mode, dc-to-dc converters.
- Step-down "buck" regulators
- Step-up "boost" regulators
- Flyback, isolated regulators
- Forward converters
- Synchronous FET converters

Functional Diagram

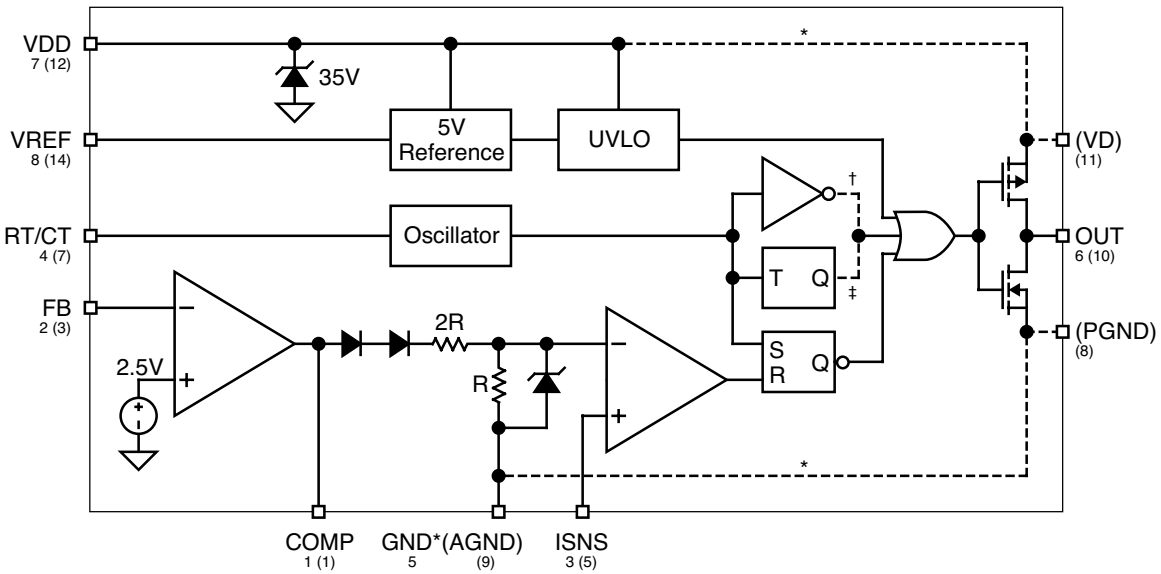

( ) pins are on MIC38HC4x-1 (14-lead) versions only
* MIC38HC4x (8-lead) versions only
† MIC38HC42, MIC38HC43 (96% max. duty cycle) versions only
‡ MIC38HC44, MIC38HC45 (50% max. duty cycle) versions only

Ordering Information

Part Number		Junction Temp. Range	Package
Standard	**Pb-Free**		
MIC38HC42BN	MIC38HC42YN	–40°C to +85°C	8-pin Plastic DIP
MIC38HC43BN	MIC38HC43YN	–40°C to +85°C	8-pin Plastic DIP
MIC38HC44BN	MIC38HC44YN	–40°C to +85°C	8-pin Plastic DIP
MIC38HC45BN	MIC38HC45YN	–40°C to +85°C	8-pin Plastic DIP
MIC38HC42-1BN	Contact Factory	–40°C to +85°C	14-pin Plastic DIP
MIC38HC43-1BN	Contact Factory	–40°C to +85°C	14-pin Plastic DIP
MIC38HC44-1BN	Contact Factory	–40°C to +85°C	14-pin Plastic DIP
MIC38HC45-1BN	Contact Factory	–40°C to +85°C	14-pin Plastic DIP
MIC38HC42BM	MIC38HC42YM	–40°C to +85°C	8-pin SOIC
MIC38HC43BM	MIC38HC43YM	–40°C to +85°C	8-pin SOIC
MIC38HC44BM	MIC38HC44YM	–40°C to +85°C	8-pin SOIC
MIC38HC45BM	MIC38HC45YM	–40°C to +85°C	8-pin SOIC
MIC38HC42-1BM	MIC38HC42-1YM	–40°C to +85°C	14-pin SOIC
MIC38HC43-1BM	MIC38HC43-1YM	–40°C to +85°C	14-pin SOIC
MIC38HC44-1BM	MIC38HC44-1YM	–40°C to +85°C	14-pin SOIC
MIC38HC45-1BM	MIC38HC45-1YM	–40°C to +85°C	14-pin SOIC

Selection Guide

	UVLO Thresholds	
Duty Cycle	Startup 8.4V Minimum Operating 7.6V	Startup 14.5V Minimum Operating 9V
0% to 96%	MIC38HC43	MIC38HC42
0% to 50%	MIC38HC45	MIC38HC44

Pin Configuration

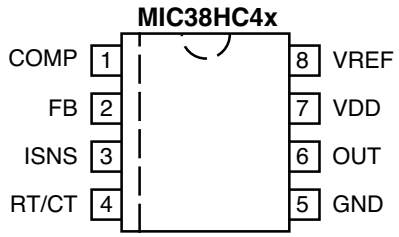

8-Pin DIP (N)
8-Lead SOIC (M)

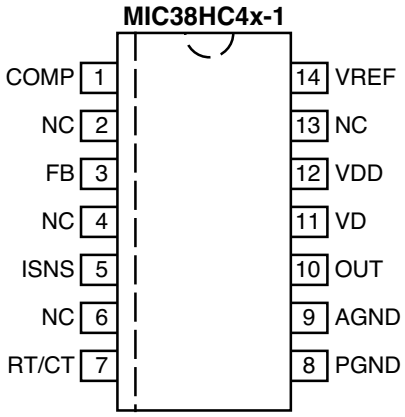

14-Pin DIP (-1BN)
14-Lead SOIC (-1BM)

Pin Description

Pin Number N, M, MM	Pin Number -1BN, -1BM	Pin Name	Pin Function
1	1	COMP	Compensation: Connect external compensation network to modify the error amplifier output.
	2	NC	Not internally connected.
2	3	FB	Feedback (Input): Error amplifier input. Feedback is 2.5V at desired output voltage.
	4	NC	Not internally connected.
3	5	ISNS	Current Sense (Input): Current sense comparator input. Connect to current sensing resistor or current transformer.
	6	NC	Not internally connected.
4	7	RT/CT	Timing Resistor/Timing Capacitor: Connect external RC network to select switching frequency.
5		GND	Ground: Combined analog and power ground.
	8	PGND	Power Ground: N-channel driver transistor ground.
	9	AGND	Analog Ground: Controller circuitry ground.
6	10	OUT	Power Output: Totem-pole output.
	11	VD	Power Supply (Input): P-channel driver transistor supply input. Return to power ground (PGND).
7	12	VDD	Analog Supply (Input): Controller circuitry supply input. Return to analog ground (AGND).
	13	NC	Not internally connected.
8	14	VREF	5V Reference (Output): Connect external RC network.

Absolute Maximum Ratings

Zener Current (V_{DD}) 30mA

Operation at ≥18V may require special precautions (Note 6).

Supply Voltage (V_{DD}), **Note 6** 20V
Switch Supply Voltage (V_D) 20V
Current Sense Voltage (V_{ISNS}) ..... –0.3V to 5.5V
Feedback Voltage (V_{FB}) ..... –0.3V to 5.5V
Output Current, 38HC42/3/4/5 (I_{OUT}) 1A

Operating Junction Temperature (T_J) ..... 150°C
Package Thermal Resistance
8-Pin Plastic DIP (θ_{JA}) ..... 125°C/W
8-Pin MM8™ (θ_{JA}) ..... 250°C/W
8-Pin SOIC (θ_{JA}) ..... 170°C/W
14-Pin Plastic DIP (θ_{JA}) ..... 90°C/W
14-Pin SOIC (θ_{JA}) ..... 145°C/W
Storage Temperature (T_A) ..... –65°C to +150°C

Electrical Characteristics

V_{DD} = 15V, **Note 4**; R_T = 9.09kΩ; C_T = 3.3nF; –40°C ≤ T_A ≤ 85°C; unless noted

Parameter	Test Conditions	Min	Typ	Max	Units
Reference Section					
Output Voltage	T_A = 25°C, I_O = 1mA	4.90	5.00	5.10	V
Line Regulation	12V ≤ V_{DD} ≤ 18V, I_O = 5μA, **Note 6**		2	20	mV
Load Regulation	1 ≤ I_O ≤ 20mA		1	25	mV
Temp. Stability	**Note 1**		0.2		mV/°C
Total Output Variation	Line, Load, Temp., **Note 1**	4.82		5.18	V
Output Noise Voltage	10Hz ≤ f ≤ 10kHz, T_A = 25°C, **Note 1**		50		μV
Long Term Stability	T_A = 125°C, 1000 hrs., **Note 1**		5	25	mV
Output Short Circuit		–30	–80	–180	mA
Oscillator Section					
Initial Accuracy	T_A = 25°C, **Note 5**	49	52	55	kHz
Voltage Stability	12 ≤ V_{DD} ≤ 18V, **Note 6**		0.2	1.0	%
Temp. Stability	T_{MIN} ≤ T_A ≤ T_{MAX}, **Note 1**		0.04		%/°C
Clock Ramp	T_A = 25°C, $V_{RT/CT}$ = 2V	7.7	8.4	9.0	mA
Reset Current	T_A = T_{MIN} to T_{MAX}	7.2	8.4	9.5	mA
Amplitude	$V_{RT/CT}$ peak to peak		1.9		Vp-p
Error Amp Section					
Input Voltage	V_{COMP} = 2.5V	2.42	2.50	2.58	V
Input Bias Current	V_{FB} = 5.0V		–0.1	–2	μA
A_{VOL}	2 ≤ V_O ≤ 4V	65	90		dB
Unity Gain Bandwidth	**Note 1**	0.7	1.0		MHz
PSRR	12 ≤ V_{DD} ≤ 18V	60			dB
Output Sink Current	V_{FB} = 2.7V, V_{COMP} = 1.1V	2	14		mA
Output Source Current	V_{FB} = 2.3V, V_{COMP} = 5V	–0.5	–1		mA
V_{OUT} High	V_{FB} = 2.3V, R_L = 15k to ground	5	6.8		V
V_{OUT} Low	V_{FB} = 2.7V, R_L = 15k to V_{REF}		0.1	1.1	V

Parameter	Test Conditions	Min	Typ	Max	Units
Current Sense					
Gain	**Notes 2, 3**	2.85	3.0	3.15	V/V
MaximumThreshold	V_{COMP} = 5V, **Note 2**	0.9	1	1.1	V
PSRR	12 ≤ V_{DD} ≤ 18V, **Note 2**		70		dB
Input Bias Current			–0.1	–2	μA
Delay to Output			120	250	ns
Output					
$R_{DS(ON)}$ 'HC' High $R_{DS(ON)}$ 'HC' Low	I_{SOURCE} = 200mA I_{SINK} = 200mA		10 5.5		Ω Ω
Rise Time	T_A = 25°C, C_L = 1nF		20	50	ns
Fall Time	T_A = 25°C, C_L = 1nF		15	40	ns
Undervoltage Lockout					
Start Threshold	MIC38HC42/4	13.5	14.5	15.5	V
	MIC38HC43/5	7.8	8.4	9.0	V
Minimum Operating Voltage	MIC38HC42/4	8	9	10	V
	MIC38HC43/5	7.0	7.6	8.2	V
Pulse Width Modulator					
Maximum Duty Cycle	MIC38HC42/3	94	96		%
	MIC38HC44/5	46	50		%
Minimum Duty Cycle				0	%
Total Standby Current					
Start-Up Current	V_{DD} = 13V, 38HC42/44 V_{DD} = 7.5V, 38HC43/45		50	200	μA
Operating Supply Current	V_{FB} = V_{ISNS} = 0V		4.0	6.0	mA
Zener Voltage (V_{DD})	I_{DD} = 25mA, **Note 6**	30	37		V

Note 1: These parameters, although guaranteed, are not 100% tested in production.
Note 2: Parameter measured at trip point of latch with V_{EA} = 0.
Note 3: Gain defined as:

$$A = \frac{\Delta V_{PIN1}}{V_{TH}(I_{SNS})}; 0 \le V_{TH}(I_{SNS}) \le 0.8V$$

Note 4: Adjust V_{DD} above the start threshold before setting at 15V.
Note 5: Output frequency equals oscillator frequency for the MIC38HC42 and MIC38HC43. Output frequency for the MIC38HC44, and MIC38HC45 equals one half the oscillator frequency.
Note 6: On 8-pin version, 20V is maximum input on pin 7, as this is also the supply pin for the output stage. On 14-pin version, 40V is maximum for pin 12 and 20V maximum for pin 11.

Typical Characteristics

Oscillator Frequency Configuration

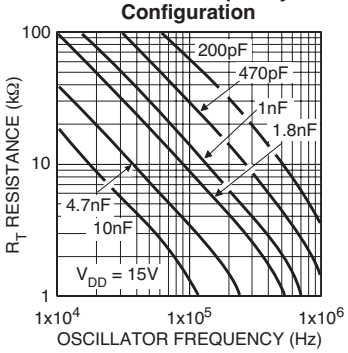

MIC38C/HC42/43 Output Dead Time vs. Oscillator Frequency

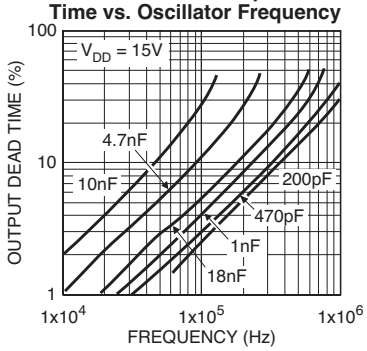

Oscillator Discharge Current vs. Temperature

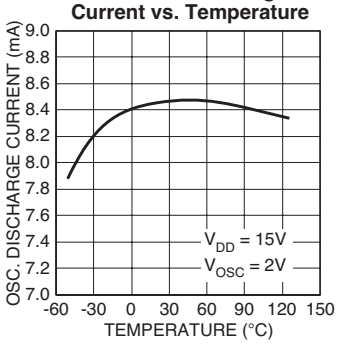

Current Sense Amplifier vs. Error Amplifier Output

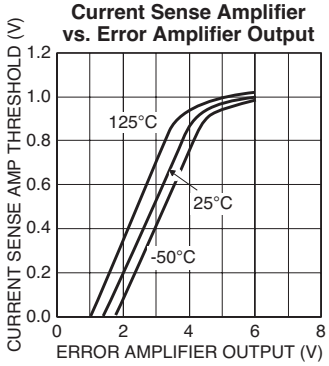

Short-Circuit Reference Current vs. Temperature

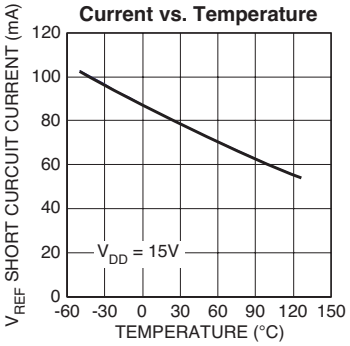

MIC38C4x Output Waveform

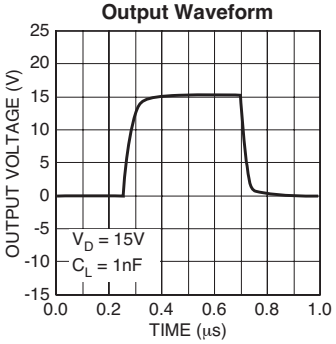

Package Information

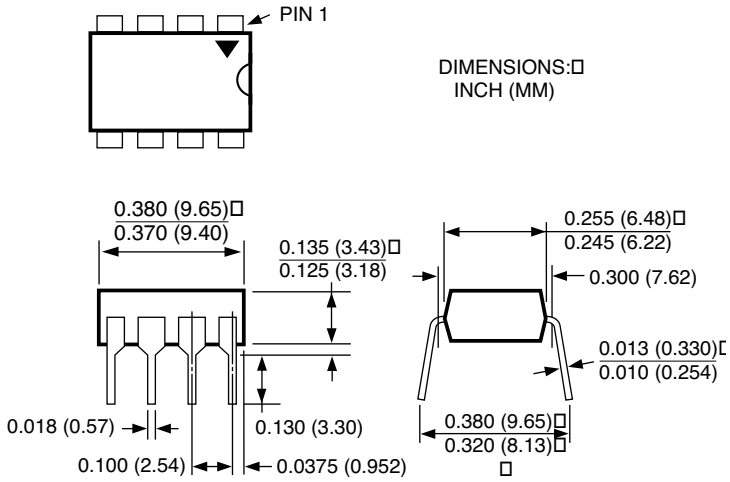

8-Pin Plastic DIP (N)

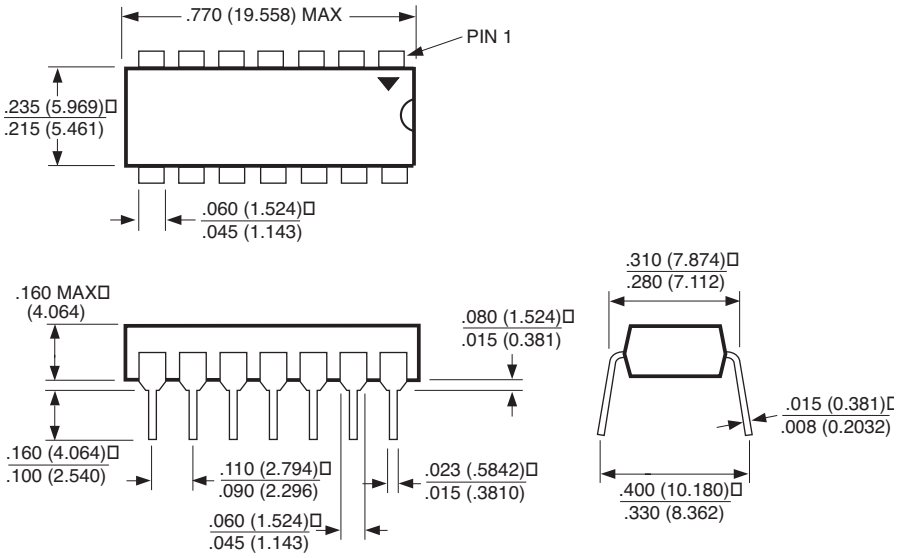

14-Pin Plastic DIP (N)

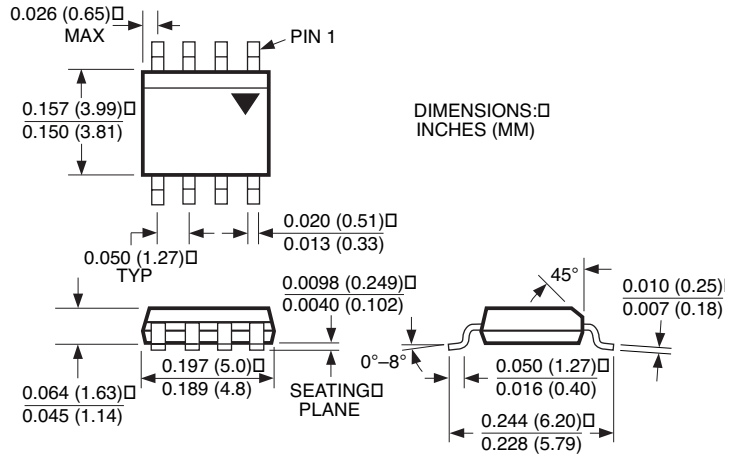

8-Pin SOIC (M)

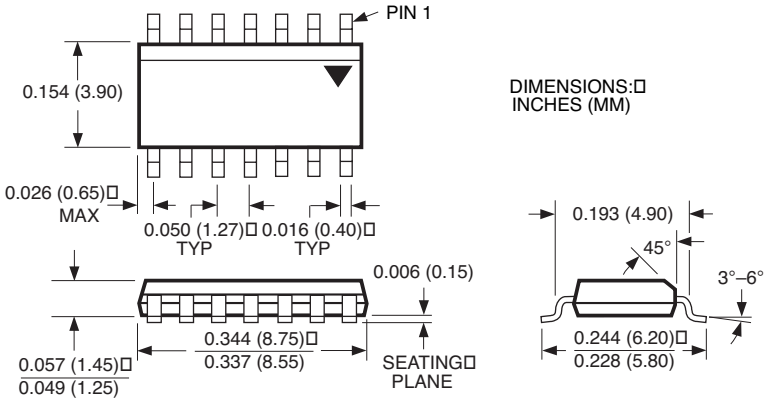

14-Pin SOIC (M)

MICREL INC. 2180 FORTUNE DRIVE SAN JOSE, CA 95131 USA

TEL + 1 (408) 944-0800 FAX + 1 (408) 474-1000 WEB http://www.micrel.com

This information furnished by Micrel in this data sheet is believed to be accurate and reliable. However no responsibility is assumed by Micrel for its use. Micrel reserves the right to change circuitry and specifications at any time without notification to the customer.

Micrel Products are not designed or authorized for use as components in life support appliances, devices or systems where malfunction of a product can reasonably be expected to result in personal injury. Life support devices or systems are devices or systems that (a) are intended for surgical implant into the body or (b) support or sustain life, and whose failure to perform can be reasonably expected to result in a significant injury to the user. A Purchaser's use or sale of Micrel Products for use in life support appliances, devices or systems is a Purchaser's own risk and Purchaser agrees to fully indemnify Micrel for any damages resulting from such use or sale.

© 2000 Micrel Incorporated

ENTEGRECİ

Bu belge www.entegreci.com üzerinden sunulmaktadır.

Elektronik komponent tedarikinde Entegreci

Entegreci, Eskişehir merkezli, Türkiye geneline satış yapan bir elektronik komponent mağazasıdır. Entegreler (IC), mikrodenetleyiciler, transistörler, diyotlar, pasif elemanlar, konnektörler, modüller ve geliştirme kartları tek adetten seri üretim adetlerine kadar satılır. Ürün sayfalarında güncel stok durumunu, fiyatı ve datasheet bağlantısını bulabilirsiniz.

Parça koduyla arama

Üretici parça numarasını yazın; stok ve fiyatı hemen görün.

www.entegreci.com

Ürün kategorileri

Entegreden kapasitöre tüm elektronik komponent kategorileri.

Kategorilere göz atın

Üreticiler

Aradığınız üreticinin ürünlerini tek sayfada inceleyin.

Üreticileri görün

Toplu alım ve teklif

Listede olmayan ya da yüksek adetli parçalar için teklif isteyin.

Teklif isteyin

www.entegreci.com | **destek@entegreci.com** | **0850 305 90 34**

Entegreci is an online electronic components store based in Türkiye. Search by manufacturer part number to see stock, prices and datasheets for integrated circuits, microcontrollers, transistors, passive components and connectors, or request a quote for parts that are not listed.

Bu sayfa Entegreci tarafından eklenmiştir. Belgenin önceki sayfaları asıl yayıncısına aittir ve içeriği değiştirilmemiştir; en güncel sürüm için belgenin yayıncısına başvurun.