LMH13000 Integrated High-Speed, Voltage-Controlled, Current-Output Driver (Transconductance Amplifier)

1 Features

- Voltage-controlled current driver (current sink)
- Supports output currents from 5mA to 5A
- Drives continuous and pulsed currents
  - Rise time (t_r): 800ps rise time
  - Pulse train: DC to 250MHz
- Low-current and high-current modes
- 18V tolerance on IOUT
- Supports LVDS, TTL, CMOS logic
- Wide power supply voltage: 3V to 5.5V
- Monolithic laser driver eliminates the need for external FET
- Integrated thermal shutdown and power-down

2 Applications

- TOF range finders
- Industrial optical sensors
- 3D scanning and gesture recognition
- OTDR
- High speed current loads
- Industrial safety light curtains
- Medical IVD and flow cytometry
- LiDAR Module
- Optical communication

3 Description

The LMH13000 is a voltage-controlled current source that enables accurate current control for driving lasers and other current control loads. The LMH13000 supports fast rise and fall times (< 1ns) for pulsed current-output applications without the need for an external FET. The LMH13000 can drive multiple laser types including: edge-emitting lasers (EEL), vertical-cavity surface-emitting lasers (VCSEL), and more. The VSET pin accurately adjusts the load current to compensate against variations for temperature and aging of the laser diode.

The LMH13000 delivers up to 1A-continuous or 5A-pulsed current depending on frequency, duty cycle, and heat dissipation. The high output impedance allows multiple LMH13000 to be paralleled easily. The LMH13000 comes in a TI proprietary HotRod™ package. This package eliminates the internal bond wires that help achieve a very low inductance in the high-current path, thereby enabling the design to achieve faster current rise and fall times. The integrated thermal shutdown protects the die in case of excessive die temperature. The LVDS inputs (EP and EN) enable control of the output current on-time, frequency, and duty cycle. The LMH13000 operates between 3V to 5.5V, with a specified ambient temperature range of –40°C to +125°C (maximum die temperature of 150°C).

Package Information

PART NUMBER	PACKAGE(1)	PACKAGE SIZE(2)
LMH13000	RQE (VQFN-HR, 13)	3.5mm × 3mm

(1) For more information, see Section 10.
(2) The package size (length × width) is a nominal value and includes pins, where applicable.

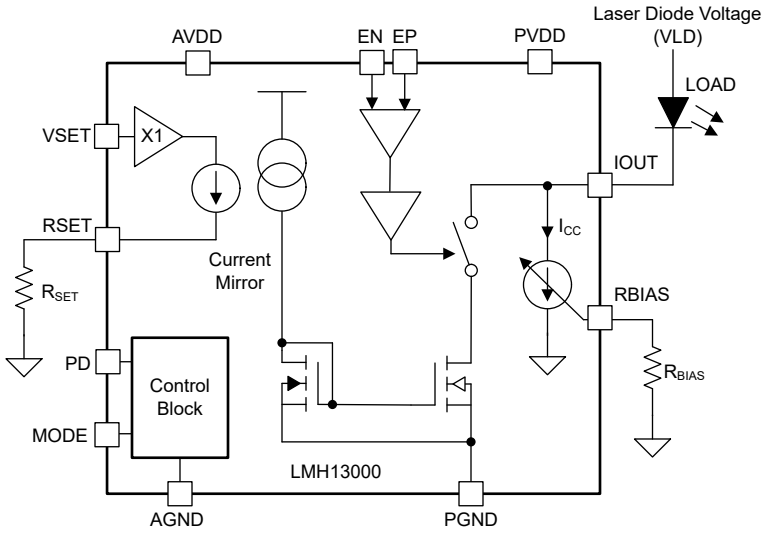

Functional Block Diagram

An IMPORTANT NOTICE at the end of this data sheet addresses availability, warranty, changes, use in safety-critical applications, intellectual property matters and other important disclaimers. PRODUCTION DATA.

Table of Contents

1 Features....1
2 Applications....1
3 Description....1
4 Pin Configuration and Functions....3
5 Specifications....4
5.1 Absolute Maximum Ratings....4
5.2 ESD Ratings....4
5.3 Recommended Operating Conditions....4
5.4 Thermal Information....5
5.5 Electrical Characteristics for Low-Current Mode, MODE = 0....5
5.6 Electrical Characteristics for High-Current Mode, MODE = 1....7
5.7 Typical Characteristics....9
5.8 Parameter Measurement Information....14
6 Detailed Description....15
6.1 Overview....15
6.2 Functional Block Diagram....15
6.3 Feature Description....16
6.4 Device Functional Modes....19
7 Application and Implementation....20
7.1 Application Information....20
7.2 Typical Application....20
7.3 Power Supply Recommendations....25
7.4 Layout....25
8 Device and Documentation Support....28
8.1 Receiving Notification of Documentation Updates....28
8.2 Support Resources....28
8.3 Trademarks....28
8.4 Electrostatic Discharge Caution....28
8.5 Glossary....28
9 Revision History....29
10 Mechanical, Packaging, and Orderable Information....30

Copyright © 2026 Texas Instruments Incorporated

4 Pin Configuration and Functions

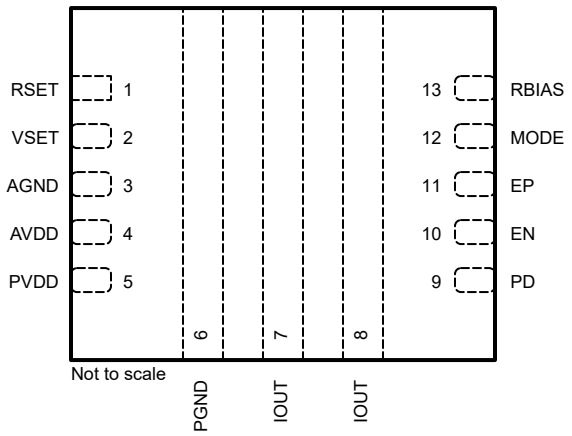

Figure 4-1. RQE Package, 13-pin WQFN-HR (Top View)

Table 4-1. Pin Functions

PIN		TYPE[1]	DESCRIPTION
NO.	NAME		
1	RSET	I	Resistor setting pin. Connect a 20kΩ resistor to AGND to set output current I_{OUT}.
2	VSET	I	Voltage setting pin. Apply a voltage to set I_{OUT} $I_{OUT} = V_{SET} / R_{SET} \times k$
3	AGND	P	Signal ground
4	AVDD	P	Signal supply
5	PVDD	P	Power supply
6	PGND	P	Power ground
7, 8	IOUT	O	Output current sink
9	PD	I	Power-down input: 0 = normal operation 1 = power down
10	EN	I	Negative LVDS input
11	EP	I	Positive LVDS input
12	MODE	I	Output current mode select 0 = low-current (5mA to 1A) 1 = high-current (250mA to 5A)
13	RBIAS	I	Constant current setting resistor. Connect a resistor to AGND for fixed dc current through IOUT. Connect to AVDD to disable.

(1) I = input, O = output, I/O = input or output, G = ground, P = power.

Copyright © 2026 Texas Instruments Incorporated

5 Specifications

5.1 Absolute Maximum Ratings

over operating free-air temperature range (unless otherwise noted)(1)

		MIN	MAX	UNIT
AVDD	Analog supply voltage		6	V
PVDD	Power supply voltage		6	V
V_{IOUT}	Voltage at IOUT pin		21.6	V
V_{SET}	Voltage at VSET pin	AGND	2.5	V
	EP, EN, PD, MODE, RSET and RBIAS	AGND	AVDD	V
	Input clamp diode for all input pins		±10	mA
T_J	Junction temperature		150	°C
T_{stg}	Storage temperature	–65	150	°C

(1) Operation outside the *Absolute Maximum Ratings* can cause permanent device damage. *Absolute maximum ratings* do not imply functional operation of the device at these or any other conditions beyond those listed under *Recommended Operating Conditions*. If briefly operating outside the *Recommended Operating Conditions* but within the *Absolute Maximum Ratings*, the device cannot sustain damage, but cannot be fully functional. Operating the device in this manner affects device reliability, functionality, performance, and shorten the device lifetime.

5.2 ESD Ratings

			VALUE	UNIT
$V_{(ESD)}$	Electrostatic discharge	Human body model (HBM), per ANSI/ESDA/JEDEC JS-001(1)	±2000	V
		Charged device model (CDM), per ANSI/ESDA/JEDEC JS-002(2)	±750	

(1) JEDEC document JEP155 states that 500V HBM allows safe manufacturing with a standard ESD control process.
(2) JEDEC document JEP157 states that 250V CDM allows safe manufacturing with a standard ESD control process.

5.3 Recommended Operating Conditions

over operating free-air temperature range (unless otherwise noted)

		MIN	NOM	MAX	UNIT
AVDD	Analog supply voltage	3		5.5	V
PVDD	Power supply voltage	3		5.5	V
T_A	Ambient temperature	–40	25	125	°C
V_{SET}	IOUT control pin, $I_{OUT} = V_{SET}$ (1) / R_{SET} × k(2)	0.01		2	V
R_{SET}	Resistor connected at RSET pin		20		kΩ
	Termination resistor between EP and EN		100		Ω
LVDS(3)	$V_{(EP-EN)}$ for LVDS = 1	100			mV
	$V_{(EP-EN)}$ for LVDS = 0			–100	

(1) V_{SET} can be adjusted beyond the *Recommended Operating Conditions* in both low- and high-current modes to compensate or calibrate for the dc errors in I_{OUT}.
(2) For the value of k, see section 5.5 and section 5.6.
(3) For reliable jitter free operation at high frequency and output currents, apply at least ±250mV.

Copyright © 2026 Texas Instruments Incorporated

5.4 Thermal Information

THERMAL METRIC[1]		LMH13000 RQE (VQFN-HR) 13 PINS	UNIT
$R_{\theta JA}$	Junction-to-ambient thermal resistance	30	°C/W
$R_{\theta JC(top)}$	Junction-to-case (top) thermal resistance	28	°C/W
$R_{\theta JB}$	Junction-to-board thermal resistance	14.5	°C/W
Ψ_{JT}	Junction-to-top characterization parameter	0.4	°C/W
Ψ_{JB}	Junction-to-board characterization parameter	14	°C/W
$R_{\theta JC(bot)}$	Junction-to-case (bottom) thermal resistance	1	°C/W

(1) For information about traditional and new thermal metrics, see the *Semiconductor and IC Package Thermal Metrics* application report.

5.5 Electrical Characteristics for Low-Current Mode, MODE = 0

at T_A = 25°C, PVDD = AVDD = 5V, RBIAS = AVDD, MODE = 0, PD = 0, and snubber as Figure 5-31 (unless otherwise noted)

PARAMETER		TEST CONDITIONS		MIN	TYP	MAX	UNIT
IOUT DC PERFORMANCE							
I_{OUT}	Adjustable current[1]	V_{SET} = 0.01V to 2V	T_A = –40°C to +125°C	0.005		1	A
	I_{OUT} accuracy	I_{OUT} = 0.1A				±14.5	%
		I_{OUT} = 1A				±5.5	
	I_{OUT} variation	I_{OUT} = 0.1A	T_A = –40°C to +125°C			±3.5	%
		I_{OUT} = 1A	T_A = –40°C to +125°C			±1	
$MINV_{IOUT}$	Minimum V_{IOUT} [2]	I_{OUT} = 0.1A	T_A = –40°C to +125°C	0.7			V
		I_{OUT} = 1A	T_A = –40°C to +125°C	2.1			
I_{LEAK}	Leakage current at IOUT	PD = 1 or LVDS = 0				170	nA
			T_A = –40°C to +125°C			48	µA
$MAXV_{IOUT}$	Maximum V_{IOUT}					18	V
IOUT AC PERFORMANCE (R_{DAMP} = 1Ω, L_{LOAD} = 1nH), SEE Figure 5-31							
C_{IOUT}	IOUT impedance	Parallel capacitance[3]			See Figure 5-12		pF
L_{IOUT}	IOUT impedance	Series inductance[4]			100		pH
	I_{OUT} noise	I_{OUT} = 100mA, integration bandwidth = 100MHz	T_A = –40°C to +125°C		60		μA_{RMS}
t_r	I_{OUT} rise time	I_{OUT} = 1A, VLD = 4V			0.4		ns
			T_A = –40°C to +125°C		0.5		
t_f	I_{OUT} fall time	I_{OUT} = 1A, VLD = 4V			0.3		ns
			T_A = –40°C to +125°C		0.4		
	I_{OUT} overshoot	I_{OUT} = 1A, VLD = 4V			23		%
	I_{OUT} undershoot	I_{OUT} = 1A, VLD = 4V			10		%
	I_{OUT} settling time	I_{OUT} = 1A, 10% settling			3		ns
VSET (I_{OUT} CONTROL PIN)							
	VSET input bias current		T_A = –40°C to +125°C			50	nA
	VSET input impedance				4 || 8		GΩ || pF
V_{SET}	VSET pin voltage	For I_{OUT} = 0.005A to 1A		0.01		2	V
k	Scaling factor for V_{SET} to I_{OUT}	I_{OUT} = V_{SET} / R_{SET} × k			10000		
	I_{OUT} / V_{SET} bandwidth				800		kHz
R_{SET}	Recommended resistor on RSET				20		kΩ

Copyright © 2026 Texas Instruments Incorporated

5.5 Electrical Characteristics for Low-Current Mode, MODE = 0 (continued)

at T_A = 25°C, PVDD = AVDD = 5V, RBIAS = AVDD, MODE = 0, PD = 0, and snubber as Figure 5-31 (unless otherwise noted)

PARAMETER		TEST CONDITIONS		MIN	TYP	MAX	UNIT
CONSTANT CURRENT (I_{CC}), FOR MODE = 0 AND MODE = 1							
I_{CC}	Constant current	For R_{BIAS} = 25kΩ to 500Ω		4		200	mA
	Disable	Connect RBIAS			AVDD		V
	Accuracy	I_{CC} = 100mA				±5.5	%
			T_A = –40°C to +125°C			±7.5	
LVDS INPUT							
	LVDS to IOUT propagation delay	I_{OUT} = 1A			10		ns
			T_A = –40°C to +125°C		13		
	Frequency (LVDS/TTL/CMOS)				250		MHz
	EP and EN voltage	$V_{CM} \pm V_{DIFF}$ (5)	f > 10MHz	AGND + 0.5		AVDD – 0.5	V
			DC and f < 10MHz	AGND		AVDD	
	IOUT jitter	f < 250MHz, 50% duty cycle			6		ps
POWER SUPPLY							
	Static quiescent current	LVDS = 0, V_{SET} = 0.2V				7	mA
			T_A = –40°C to +125°C			8	
	Dynamic quiescent current(6)	ΔLVDS at 10MHz, I_{OUT} = 1A, 50% Duty Cycle			13		mA
		ΔLVDS at 250MHz, I_{OUT} = 1A, 50% Duty Cycle			80		mA
THERMAL SHUTDOWN, FOR MODE = 0 AND MODE = 1							
T_{SHD}	Thermal shutdown temperature				160		°C
	Thermal shutdown hysteresis				10		°C
	Die thermal time constant	Device mounted on a JEDEC PCB			See Figure 5-28		
MODE, FOR MODE = 0 AND MODE = 1							
	Operating mode	Low-current mode, MODE = 0	T_A = –40°C to +125°C			AGND + 1.2	V
		High-current mode, MODE = 1	T_A = –40°C to +125°C	AVDD – 1.2			
POWER DOWN, FOR MODE = 0 AND MODE = 1							
I_{PD}	Power-down current		T_A = –40°C to +125°C			35	µA
	Enable voltage threshold	PD = 0	T_A = –40°C to +125°C			AGND + 1.2	V
	Disable voltage threshold	PD = 1	T_A = –40°C to +125°C	AVDD – 1.2			V
	Turn-on time delay	PD = 1 → 0	T_A = –40°C to +125°C		15		µs
	Turn-off time delay	PD = 0 → 1	T_A = –40°C to +125°C		1		µs

(1) The LMH13000 continues to operate for V_{SET} greater than the mentioned limits; however, lifetime reliability is not guaranteed.
(2) Maintain $MINV_{IOUT}$ to provide I_{OUT} accuracy. If I_{OUT} accuracy is not critical, lower this specification further to improve thermal performance.
(3) C_{IOUT} is the capacitance from the IOUT pin to PGND pin.
(4) L_{IOUT} is the series inductance from the IOUT pin to the drain of the internal FET.
(5) Voltages applied on EP and EN remain at least 0.5V from either rail only for high-frequency operation. For low-frequency operation, EP and EN can go up to either rail.
(6) Dynamic quiescent current reduces proportional to the duty cycle and reduces towards static quiescent current as duty cycle reduces towards 0%

Copyright © 2026 Texas Instruments Incorporated

5.6 Electrical Characteristics for High-Current Mode, MODE = 1

at T_A = 25°C, PVDD = AVDD = 5V, RBIAS = AVDD, MODE = 1, PD = 0, and snubber as Figure 5-31 (unless otherwise noted)

PARAMETER		TEST CONDITIONS		MIN	TYP	MAX	UNIT
IOUT DC PERFORMANCE							
I_{OUT}	Adjustable current(4)	V_{SET} = 0.1V to 2V	T_A = –40°C to +125°C	0.25		5	A
	I_{OUT} accuracy	I_{OUT} = 0.5A				±10.5	%
		I_{OUT} = 2A				±6	
		I_{OUT} = 5A				±4	
	I_{OUT} variation	I_{OUT} = 0.5A	T_A = –40°C to +125°C			±2.5	%
		I_{OUT} = 2A	T_A = –40°C to +125°C			±1.3	
		I_{OUT} = 5A	T_A = –40°C to +125°C			±0.9	
$MINV_{IOUT}$	Minimum V_{IOUT} (1)	I_{OUT} = 0.5A	T_A = –40°C to +125°C	0.7			V
		I_{OUT} = 5A	T_A = –40°C to +125°C	2.2			
I_{LEAK}	Leakage current at I_{OUT}	PD = 1 or LVDS = 0,				0.35	µA
			T_A = –40°C to +125°C			100	
$MAXV_{IOUT}$	Maximum V_{IOUT}					18	V
IOUT AC PERFORMANCE (R_{DAMP} = 1Ω, L_{LOAD} = 1nH), SEE Figure 5-31							
C_{IOUT}	IOUT impedance	Parallel capacitance(2)			See Figure 5-12		pF
L_{IOUT}	IOUT impedance	Series inductance(3)			100		pH
	I_{OUT} noise	I_{OUT} = 0.5A, integration bandwidth = 100MHz	T_A = –40°C to +125°C		200		$µA_{RMS}$
t_r	I_{OUT} rise time	I_{OUT} = 2A, VLD = 6V			0.5		ns
			T_A = –40°C to +125°C		0.6		
t_f	I_{OUT} fall time	I_{OUT} = 2A, VLD = 6V			0.5		ns
			T_A = –40°C to +125°C		0.7		
	I_{OUT} overshoot	I_{OUT} = 2A, VLD = 6V			20		%
	I_{OUT} undershoot	I_{OUT} = 2A, VLD = 6V			15		%
	I_{OUT} settling time	I_{OUT} = 2A, 10% settling			4		ns
			T_A = –40°C to +125°C		6		
VSET (I_{OUT} CONTROL PIN)							
V_{SET}	VSET pin voltage	For I_{OUT} = 0.25A to 5A		0.1		2	V
k	Scaling factor for V_{SET} to I_{OUT}	I_{OUT} = V_{SET} / R_{SET} × k			50000		
	I_{OUT} / V_{SET} bandwidth				600		kHz
LVDS INPUT							
	LVDS to IOUT propagation delay	I_{OUT} = 2A			9		ns
			T_A = –40°C to +125°C		13		
		I_{OUT} = 5A			9		
			T_A = –40°C to +125°C		10		
	Frequency (LVDS/TTL/CMOS)					250	MHz
	IOUT jitter	f < 250MHz, 50% duty cycle			7		ps
POWER SUPPLY							
	Static quiescent current	LVDS = 0, V_{SET} = 0.2V				23.5	mA
			T_A = –40°C to +125°C			24	
	Dynamic quiescent current(5)	ΔLVDS at 10MHz, I_{OUT} = 5A, 50% Duty Cycle			50		mA
		ΔLVDS at 200MHz, I_{OUT} = 5A, 50% Duty Cycle			360		

(1) Maintain $MINV_{IOUT}$ to provide I_{OUT} accuracy. If I_{OUT} accuracy is not critical, lower this specification further to improve thermal performance.
(2) C_{IOUT} is the capacitance from the IOUT pin to PGND pin.
(3) L_{IOUT} is the series inductance from the IOUT pin to the drain of the internal FET.
(4) The LMH13000 continues to operate for V_{SET} greater than mentioned limits; however lifetime reliability is not guaranteed.

Copyright © 2026 Texas Instruments Incorporated

(5) Dynamic quiescent current reduces proportional to the duty cycle and reduces towards static quiescent current as duty cycle reduces towards 0%

Copyright © 2026 Texas Instruments Incorporated

5.7 Typical Characteristics

at T_A = 25°C, AVDD = PVDD = 5V, R_{DAMP} = 1Ω, L_{LOAD} = 1nH, and RBIAS = AVDD (unless otherwise noted)

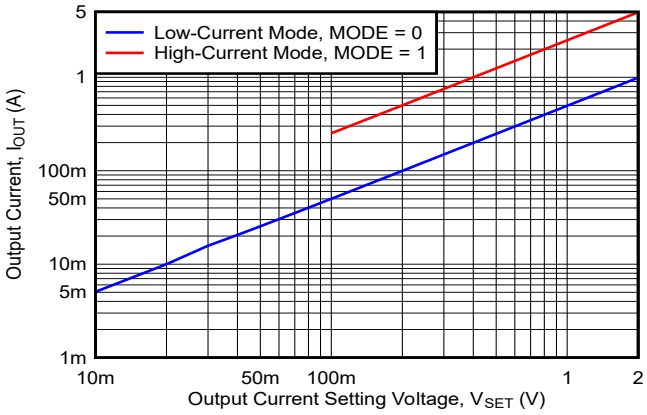

Figure 5-1. V_{SET} to I_{OUT} Transfer Characteristics

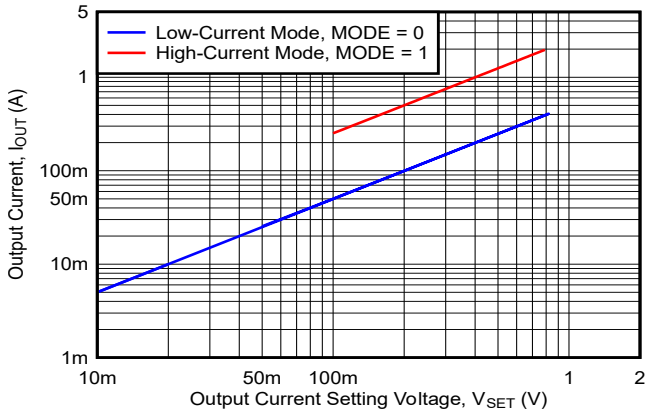

AVDD = PVDD = 3.3V

Figure 5-2. V_{SET} to I_{OUT} Transfer Characteristics

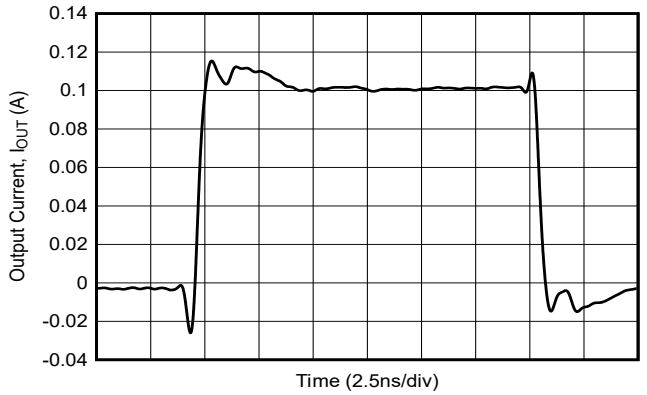

MODE = 0, I_{OUT} = 0.1A, VLD = 1V, t_r = 357ps, t_f = 502ps
AVDD = PVDD = 3.3V

Figure 5-3. I_{OUT} Pulse Response

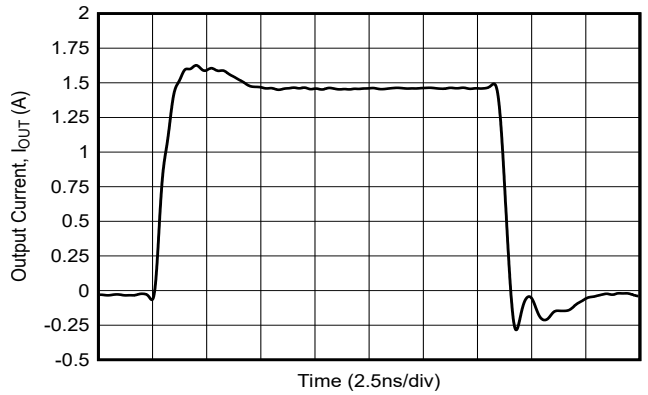

MODE = 1, I_{OUT} = 1.5A, VLD = 4V, t_r = 579ps, t_f = 387ps
AVDD = PVDD = 3.3V

Figure 5-4. I_{OUT} Pulse Response

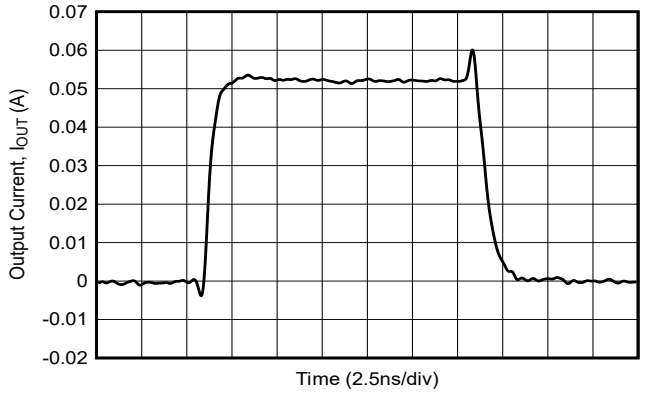

MODE = 0, I_{OUT} = 0.05A, VLD = 3V, t_r = 673ps, t_f = 1.28ns
R_{DAMP}=10Ω

Figure 5-5. I_{OUT} Pulse Response

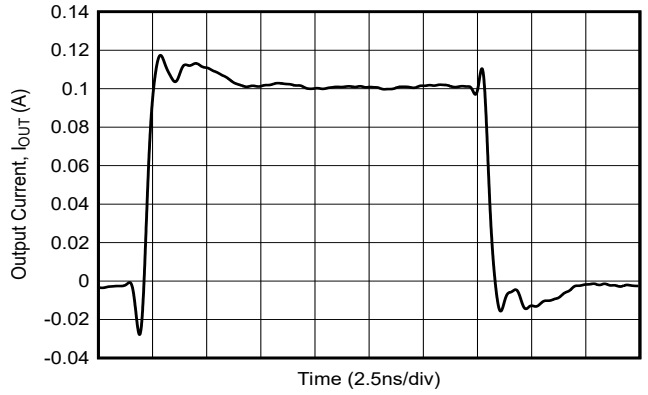

MODE = 0, I_{OUT} = 0.1A, VLD = 1V, t_r = 243ps, t_f = 340ps

Figure 5-6. I_{OUT} Pulse Response

Copyright © 2026 Texas Instruments Incorporated

5.7 Typical Characteristics (continued)

at T_A = 25°C, AVDD = PVDD = 5V, R_{DAMP} = 1Ω, L_{LOAD} = 1nH, and RBIAS = AVDD (unless otherwise noted)

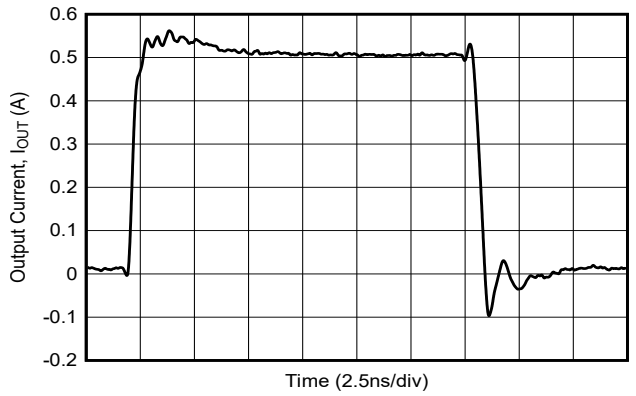

MODE = 0, I_{OUT} = 0.5A, VLD = 2V, t_r = 258ps, t_f = 408ps

Figure 5-7. I_{OUT} Pulse Response

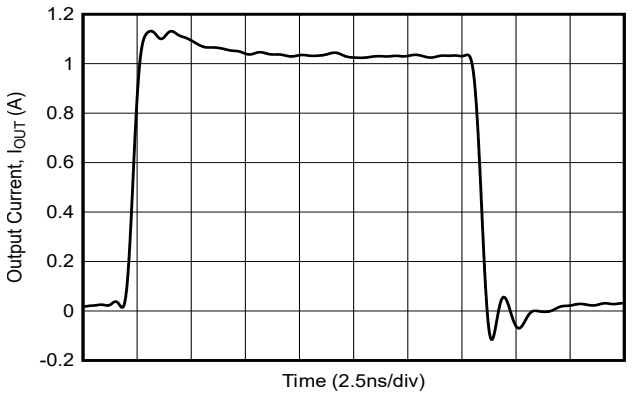

MODE = 0, I_{OUT} = 1A, VLD = 4V, t_r = 229ps, t_f = 382ps

Figure 5-8. I_{OUT} Pulse Response

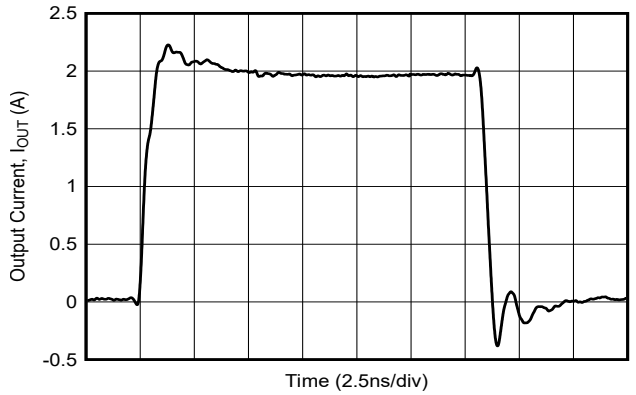

MODE = 1, I_{OUT} = 2A, VLD = 4V, t_r = 593ps, t_f = 405ps

Figure 5-9. I_{OUT} Pulse Response

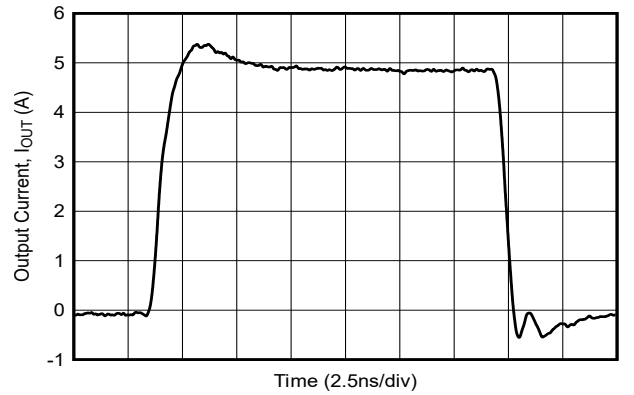

MODE = 1, I_{OUT} = 5A, VLD = 10V, t_r = 882ps, t_f = 594ps

Figure 5-10. I_{OUT} Pulse Response

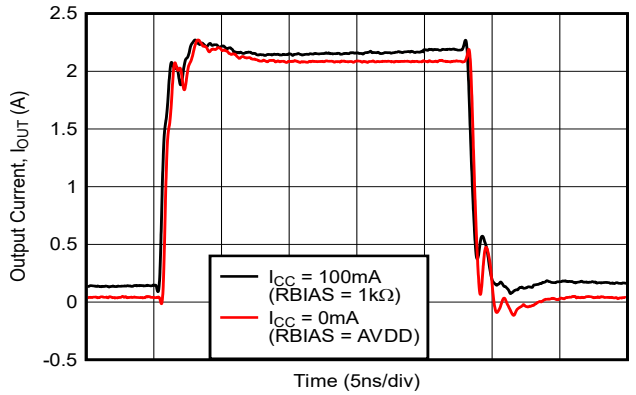

I_{OUT} = 2A, VLD = 6V

Figure 5-11. I_{OUT} Pulse Response With and Without I_{CC}

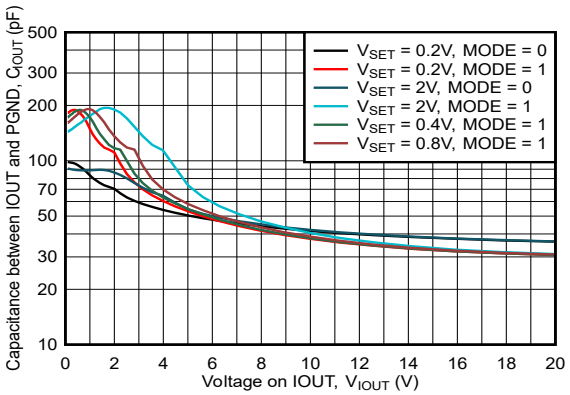

Capacitance between IOUT and PGND, see Figure 5-31

Figure 5-12. C_{IOUT} vs V_{IOUT}

Copyright © 2026 Texas Instruments Incorporated

5.7 Typical Characteristics (continued)

at T_A = 25°C, AVDD = PVDD = 5V, R_{DAMP} = 1Ω, L_{LOAD} = 1nH, and RBIAS = AVDD (unless otherwise noted)

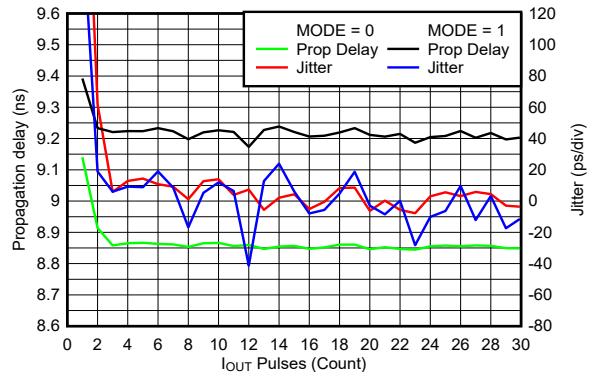

I_{OUT} = 1A, f = 100MHz

Figure 5-13. LVDS to I_{OUT} Timing Characteristics

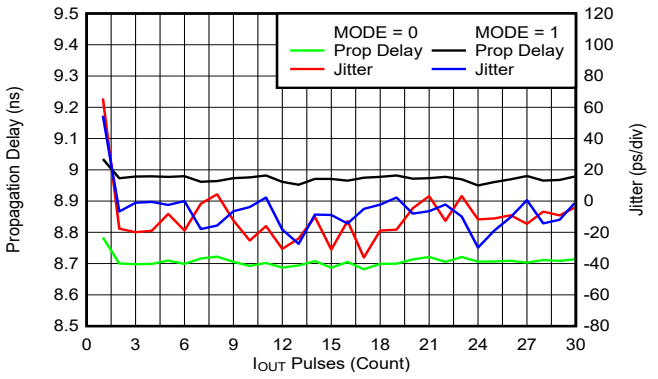

I_{OUT} = 1A, f = 100kHz

Figure 5-14. LVDS to I_{OUT} Timing Characteristics

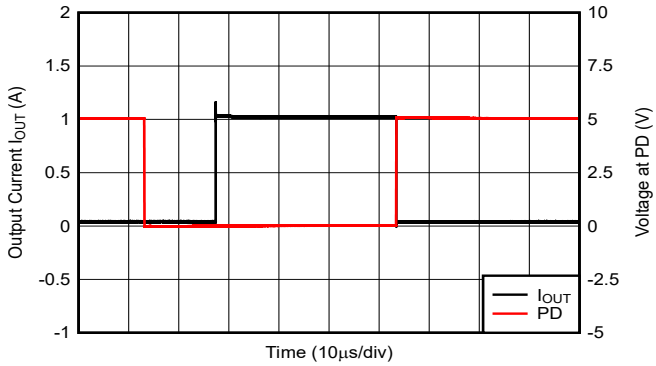

MODE = 0, VLD = 5V, LVDS = 1

Figure 5-15. PD and I_{OUT} Response

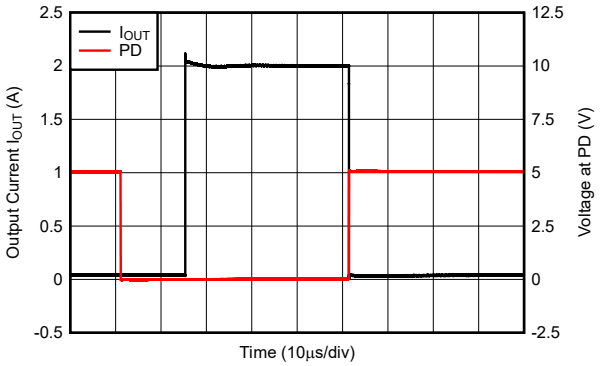

MODE = 1, VLD = 5V, LVDS = 1

Figure 5-16. PD and I_{OUT} Response

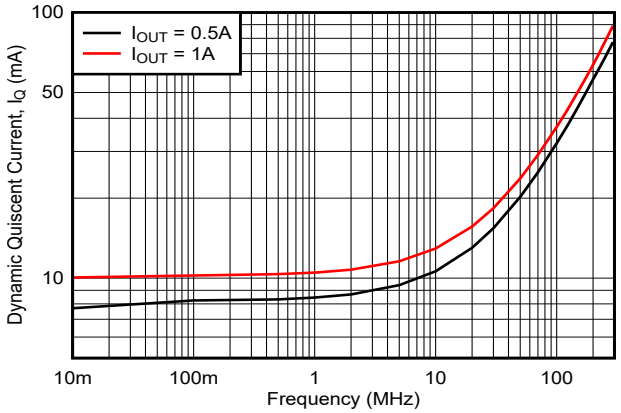

MODE = 0, 50% duty cycle

Figure 5-17. Quiescent Current vs LVDS Frequency

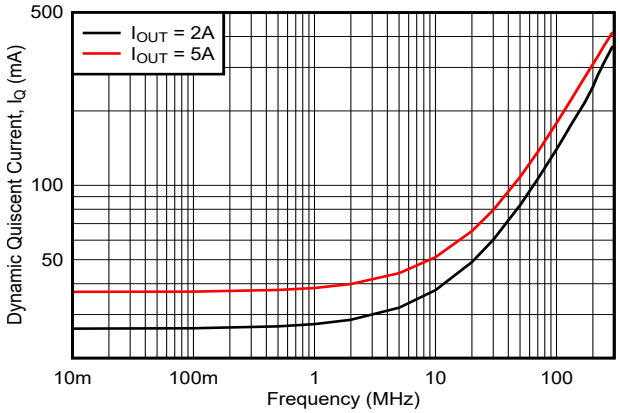

MODE = 1, 50% duty cycle

Figure 5-18. Quiescent Current vs LVDS Frequency

Copyright © 2026 Texas Instruments Incorporated

5.7 Typical Characteristics (continued)

at T_A = 25°C, AVDD = PVDD = 5V, R_{DAMP} = 1Ω, L_{LOAD} = 1nH, and RBIAS = AVDD (unless otherwise noted)

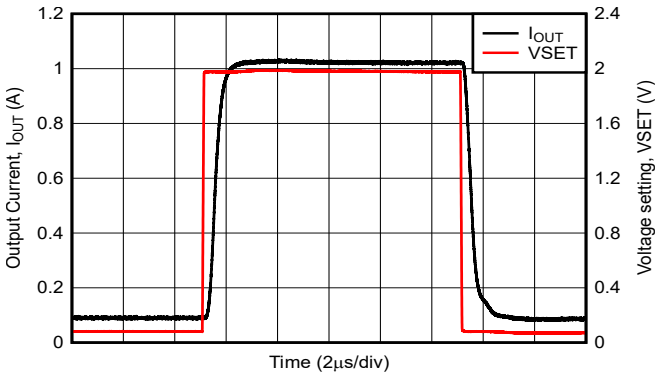

MODE = 0, I_{OUT} = 1A

Figure 5-19. VSET to I_{OUT} Step Response

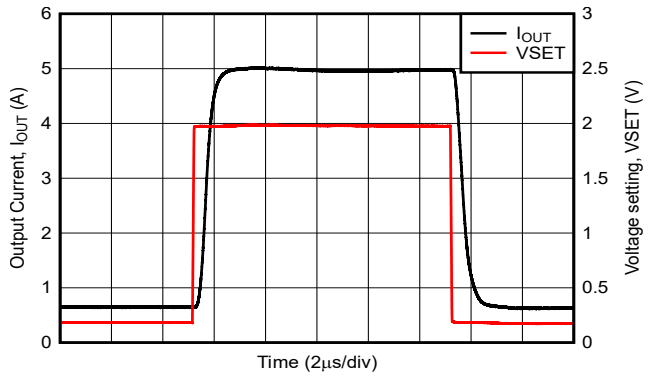

MODE = 1, I_{OUT} = 5A

Figure 5-20. VSET to I_{OUT} Step Response

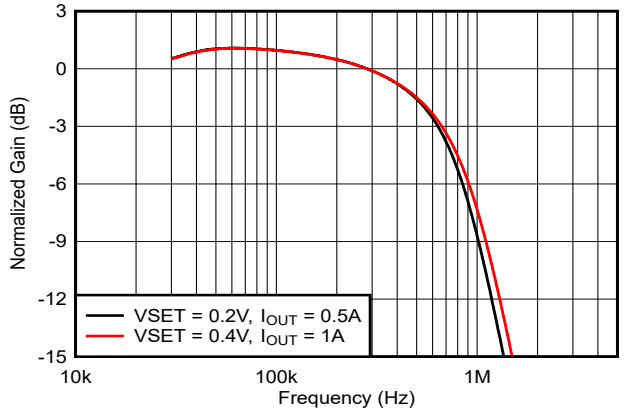

MODE = 1

Figure 5-21. VSET to I_{OUT} Bandwidth Response

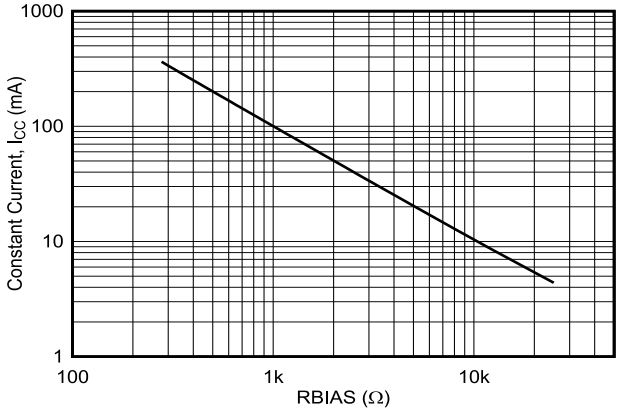

Figure 5-22. Constant Current Bias Transfer Function

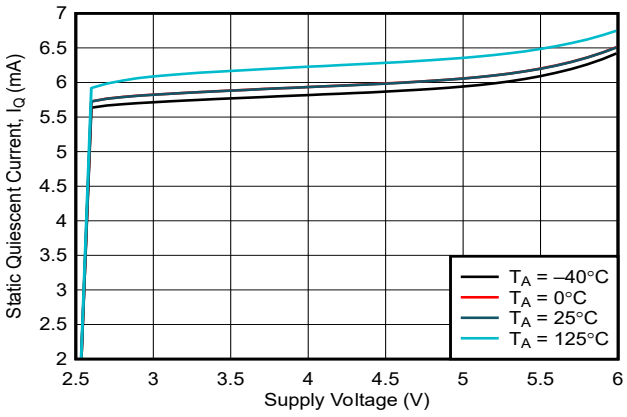

MODE = 0, supply voltage = AVDD = PVDD

Figure 5-23. Static Quiescent Current vs Supply Voltage

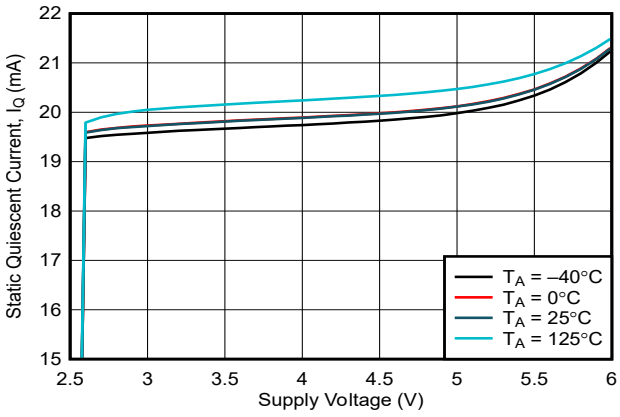

MODE = 1, supply voltage = AVDD = PVDD

Figure 5-24. Static Quiescent Current vs Supply Voltage

Copyright © 2026 Texas Instruments Incorporated

5.7 Typical Characteristics (continued)

at T_A = 25°C, AVDD = PVDD = 5V, R_{DAMP} = 1Ω, L_{LOAD} = 1nH, and RBIAS = AVDD (unless otherwise noted)

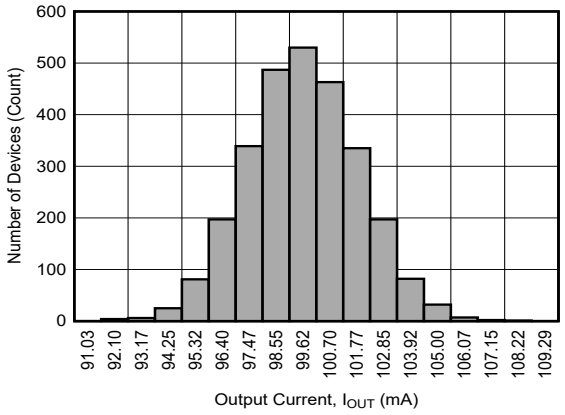

MODE = 0, VSET = 0.2V, ideal I_{OUT} = 0.1A

Figure 5-25. I_{OUT} Accuracy Histogram

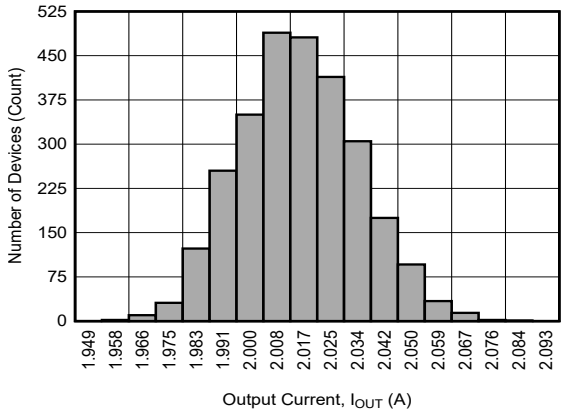

MODE = 1, VSET = 0.8V, ideal I_{OUT} = 2A

Figure 5-26. I_{OUT} Accuracy Histogram

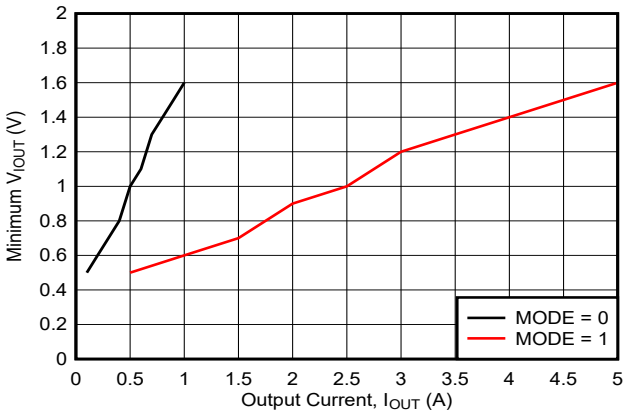

Figure 5-27. Minimum Voltage on IOUT vs Output Current

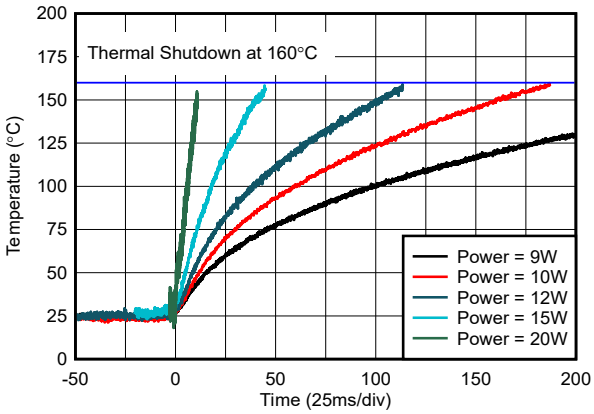

Power = I_{OUT} × V_{IOUT}, power dissipated in the device

Figure 5-28. Die Temperature vs Power Dissipated in the Device

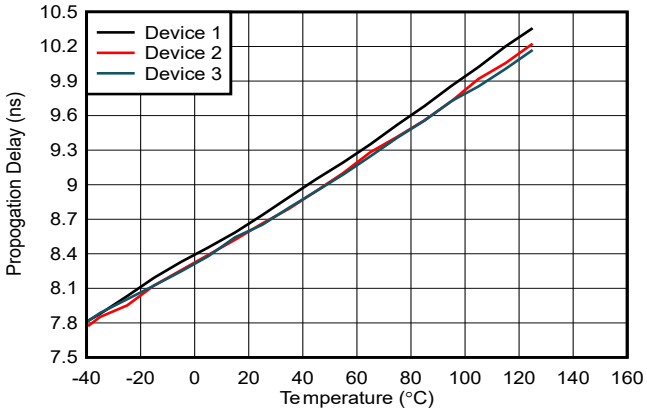

Propagation delay of signals from LVDS input (V) to I_{OUT} (A)

Figure 5-29. Propagation Delay vs Temperature

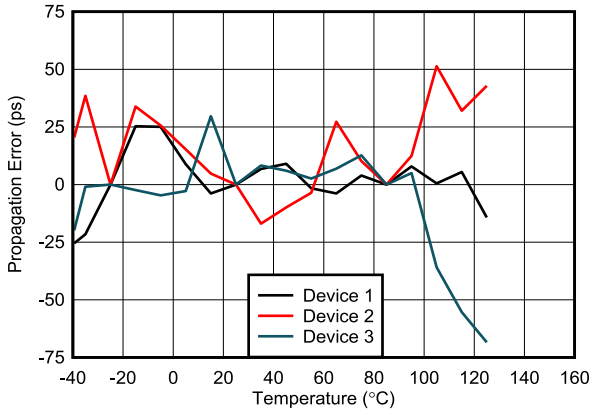

Figure 5-30. Propagation Delay Error Post 3 Temperature Calibration

Copyright © 2026 Texas Instruments Incorporated

5.8 Parameter Measurement Information

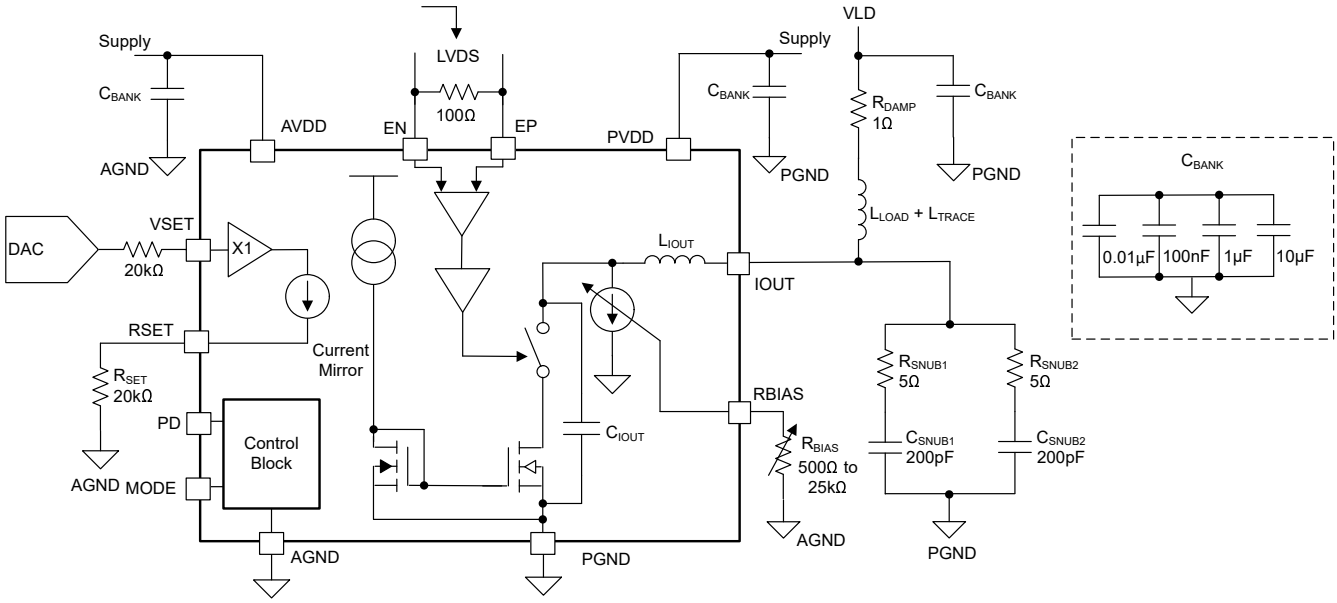

Figure 5-31. Electrical Parameter Measurement Circuit

Copyright © 2026 Texas Instruments Incorporated

6 Detailed Description

6.1 Overview

The LMH13000 is a high-speed, voltage-controlled current source designed for constant and pulsing current output, making this device an excellent choice for applications such as laser driving in optical time-of-flight (ToF) applications. With rise and fall times of 1ns, the LMH13000 is designed for use in industrial optical sensors, optical time-domain reflectometry (OTDR), high-speed current loads, and medical applications such as in-vitro diagnostics (IVD) and flow cytometry. The device supports continuous currents up to 1A and pulsed currents up to 5A. The LMH13000 operates with a bias voltage range of 3V to 5.5V and supports voltages of up to 18V on the IOUT. The LVDS inputs enable time control on the output current, whereas the VSET input enables amplitude control on the output current. These features make the LMH13000 a reliable and efficient offering for high-speed, high-precision current-driving applications.

6.2 Functional Block Diagram

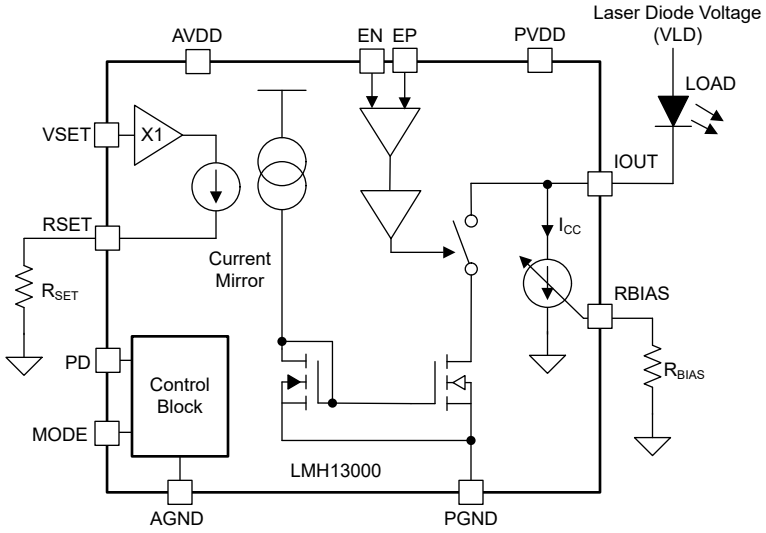

6.3 Feature Description

6.3.1 Constant Current (I_{CC})

The LMH13000 is designed to provide a parallel constant current (I_{CC}) at the IOUT. This constant current is in addition to the current set by the VSET. I_{CC} is adjusted by selecting an appropriate RBIAS resistor.

$$I_{CC} = \frac{100}{RBIAS} \quad (1)$$

I_{CC} can be set from 4mA to 200mA; $I_{OUT}(TOTAL) = I_{CC}$, when LVDS = 0 and PD = 0.

For example:

- For R_{BIAS} = 25kΩ; I_{CC} = 4mA
- For R_{BIAS} = 500Ω; I_{CC} = 200mA

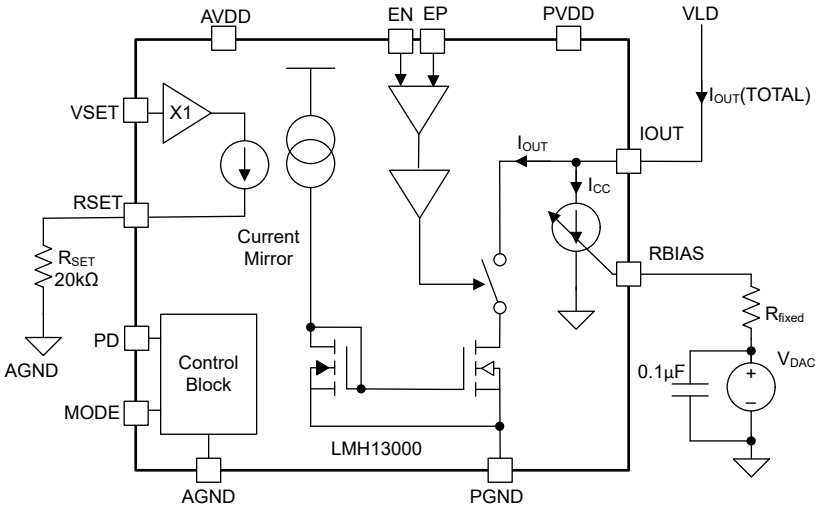

Figure 6-1. Circuit for Dynamic I_{CC} Control

Figure 6-1 shows that the output current $I_{OUT}(TOTAL)$ is the sum of I_{CC} (set by R_{BIAS}) and I_{OUT} which depends on the V_{SET}.

$$I_{OUT}(TOTAL) = I_{CC} + I_{OUT} \quad (2)$$

Disable I_{CC} by shorting the RBIAS pin to AVDD. I_{CC} does not depend on the LVDS input. However, during PD = 1 (power-down state), I_{CC} is internally turned off irrespective of the RBIAS value. I_{CC} enables the application to keep a constant current flowing though the connected load. With applications such as laser diode driving, a small bias current such as that of I_{CC} helps improve the optical turn-on time.

Figure 6-1 shows how I_{CC} is dynamically changed by connecting a DAC on the other end of R_{fixed} resistor.

Equation 3 gives the relation between I_{CC} and V_{DAC} for a given R_{fixed} resistor connect to RBIAS pin.

$$I_{CC} = 200 \times \left(\frac{0.5 - V_{DAC}}{R_{fixed}}\right) \quad (3)$$

Copyright © 2026 Texas Instruments Incorporated

6.3.2 Propagation Delay With Temperature

6.3.2.1 Calibration of Propagation Delay With Temperature

Systems that rely on LVDS input to the LMH13000 as the start reference point for time-of-flight calculations require accurate calibration of the prorogation delay from LVDS to IOUT. Propagation delay varies with temperature as a result of changes in device behavior, thus creating timing mismatches in sensitive systems.

Measurement and Calibration Approach:

1. Measure propagation delay values at three key temperature points: low (-40°C), ambient (25°C), and high (125°C).
2. A second-order polynomial fit is applied to the delay versus temperature curve using linear regression techniques.
3. Use this polynomial equation to predict delay values at intermediate temperatures.
4. See Figure 5-30 for error in delay estimation. The graph shows the difference between actual measured delay versus predicted delay.

This calibration technique enables effective compensation for temperature-induced propagation delay shifts. Applying the polynomial correction maintains consistent timing behavior across operating conditions.

6.3.2.2 Start Pulse Directly From IOUT

For applications that require even higher accuracy or do not have the ability to calibrate across temperature, the following circuit technique enables high-accuracy start-pulse generation by directly monitoring the laser stage. The laser current pulse generates the start signal for time-of-flight measurement. Resistor R_{DAMP} in series with the laser acts as a current sensing element. The voltage drop across the resistor is converted to differential and provides the start-of-pulse signal as follows.

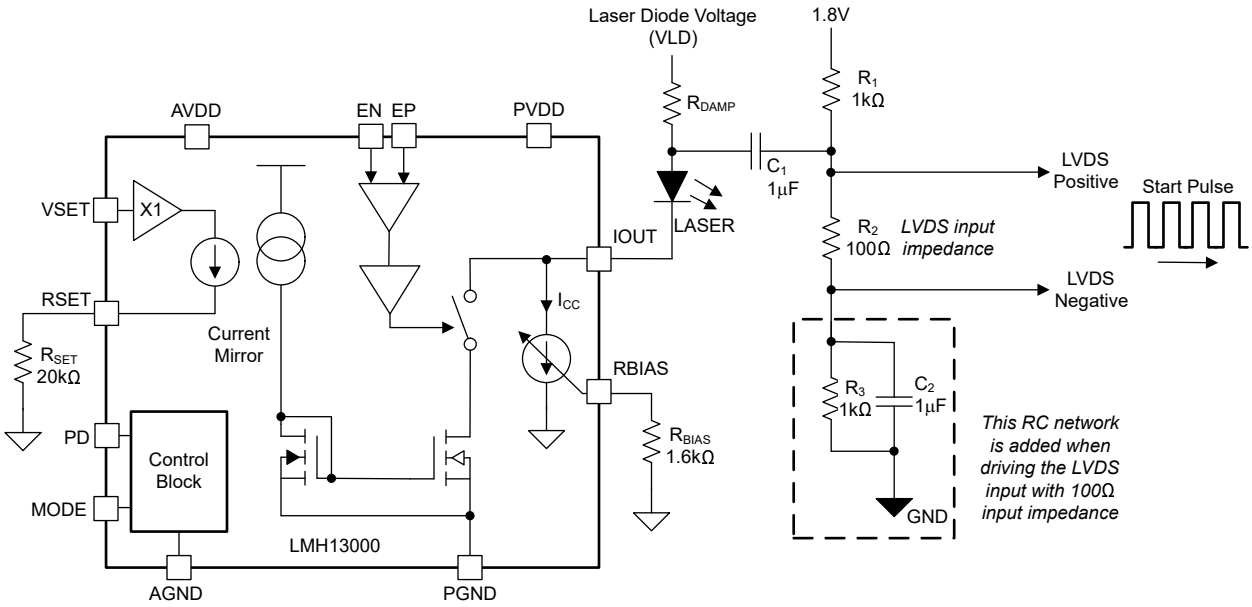

Figure 6-2. Laser Diode Pulse Generation for Time-of-Flight Measurement

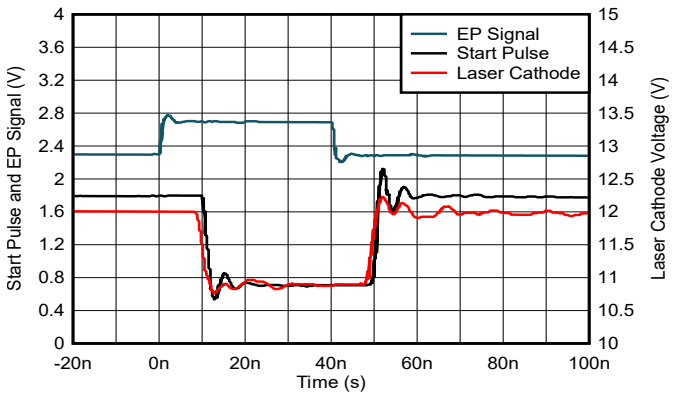

Figure 6-3. Start Pulse, EP Signal, and Laser Cathode Voltage vs Time

This method removes the requirement for propagation delay calibration of the LMH13000 laser driver. The same configuration also drives both a 100Ω input impedance LVDS driver and any other high input impedance I/O driver.

6.3.3 Fault Detection Mechanism

The LMH13000 incorporates comprehensive internal monitoring to make sure operation remains within safe limits. Integrated comparators continuously supervise internal reference and bias currents. Fault conditions on the VSET, RSET, or RBIAS pins that drive currents beyond established safety thresholds triggers an internal error state. Upon detection of an over-current condition, the device automatically disables the output stages to prevent thermal or electrical damage. The total time taken for the faults to be detected and the respective switches to be disconnected is approximately 1µs.”

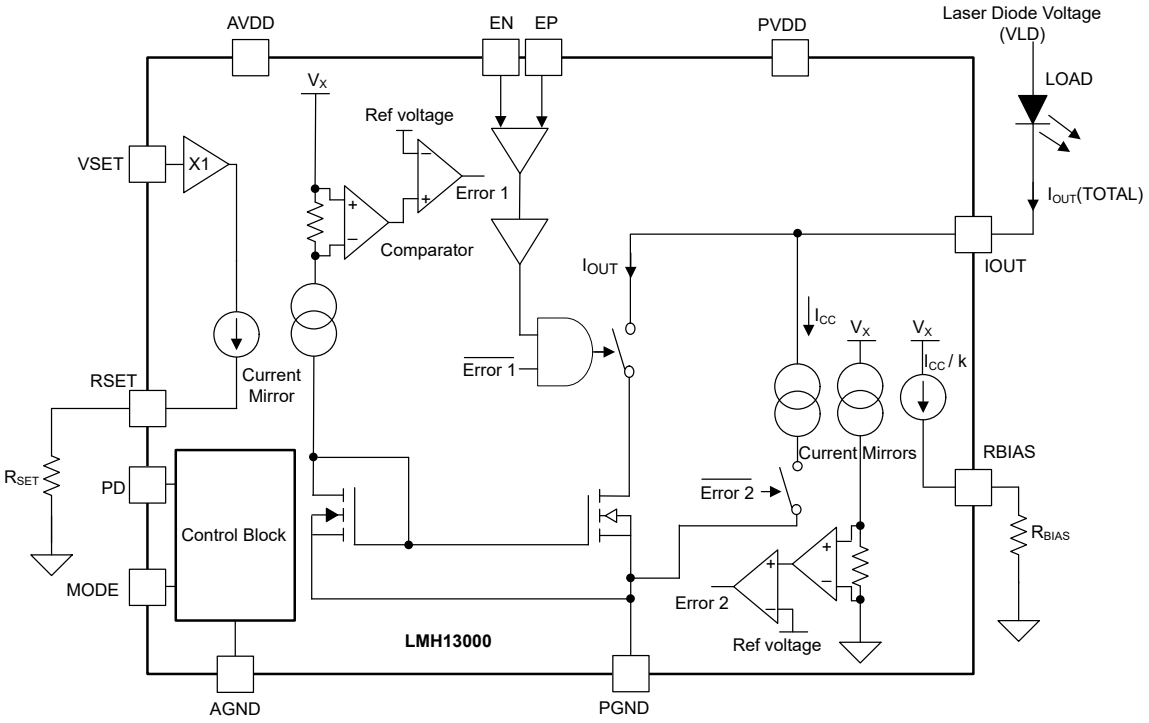

Figure 6-4. Fault Detection Circuit

Copyright © 2026 Texas Instruments Incorporated

Table 6-1. Fault Detection Truth Table

Fault Description	Mode	End Result
VSET > 3.6V (alternatively if VSET shorted to AVDD/PVDD) OR RSET shorted to AGND	0	If the resulting I_{OUT} > 1.8A, Error 1 is triggered. I_{OUT} is cut off
	1	If the resulting I_{OUT} > 9A, Error 1 is triggered. I_{OUT} is cut off
RBIAS shorted to AGND	X	If resulting I_{CC} > 400mA, Error 2 is triggered. I_{CC} is cut off

6.4 Device Functional Modes

The LMH13000 operates in three modes: two operating and one power-down.

- Normal-operating mode (PD = 0):
  - Low-current mode (MODE = 0)
  - High-current mode (MODE = 1)
- Power-down mode (PD = 1)

In normal-operating mode, PD = 0, MODE is 0 or 1. Based on LVDS = 0 or 1, IOUT allows or blocks the current flow.

- In low-current mode (MODE = 0):

$$I_{OUT} = \frac{VSET}{RSET} \times k;\ k = 10000 \quad (4)$$

  - V_{SET} is from 0.01 to 2V, which sets I_{OUT} to be from 5mA to 1A.
  - Low-current mode enables a lower quiescent operating current.
  - The headroom required on IOUT is relatively higher compared to high-current mode.
  - When biased with the same voltage for laser diode bias (VLD), low-current mode results in lower overshoots compared to that of high-current mode.
- In high-current mode (MODE = 1)

$$I_{OUT} = \frac{VSET}{RSET} \times k;\ k = 50000 \quad (5)$$

  - V_{SET} is from 0.1 to 2V, which sets I_{OUT} from 250mA to 5A.
  - High-current mode consumes a relatively higher quiescent operating current.
  - The headroom required on IOUT is relatively lower compared to low-current mode.
  - Higher overshoots are observed when biased with the same VLD as compared to that of low-current mode.

In power-down mode (PD = 1), the output is effectively disabled, and the device operates with very low quiescent current, with only minimal leakage observed at IOUT.

Table 6-2. Truth Table

PD	MODE	LVDS(1)	I_{OUT} (2)	I_{CC} (3)
0	0	LVDS = 1	V_{SET} / R_{SET} × 10k	100 / R_{BIAS}
0	1	LVDS = 1	V_{SET} / R_{SET} × 50k	100 / R_{BIAS}
0	X(3)	LVDS = 0	I_{LEAK}	100 / R_{BIAS}
1	X	X	I_{LEAK}	0A

(1) a. LVDS = 0; EP – EN < –100mV
b. LVDS = 1; EP – EN > 100mV

(2) I_{OUT}(TOTAL) = I_{OUT} + I_{CC}
(3) Assuming a resistor connected between RBIAS and AGND. If RBIAS = AVDD, then I_{CC} = 0A.
(4) X = don't care.

Copyright © 2026 Texas Instruments Incorporated

7 Application and Implementation

Note

Information in the following applications sections is not part of the TI component specification, and TI does not warrant the accuracy or completeness. TI's customers are responsible for determining an excellent choice of components for the purposes, as well as validating and testing the design implementation to confirm system functionality.

7.1 Application Information

The LMH13000 is a generic current output driver. LMH13000 is used for driving any loads that require a constant- or pulsed-current drive.

7.2 Typical Application

7.2.1 Optical Time-of-Flight System

An optical time-of-flight (ToF) system consists of two approaches: direct and indirect. The LMH13000 supports both approaches to measure the time and phase delay for light to travel from a source to an object and back, helping determine the object distance.

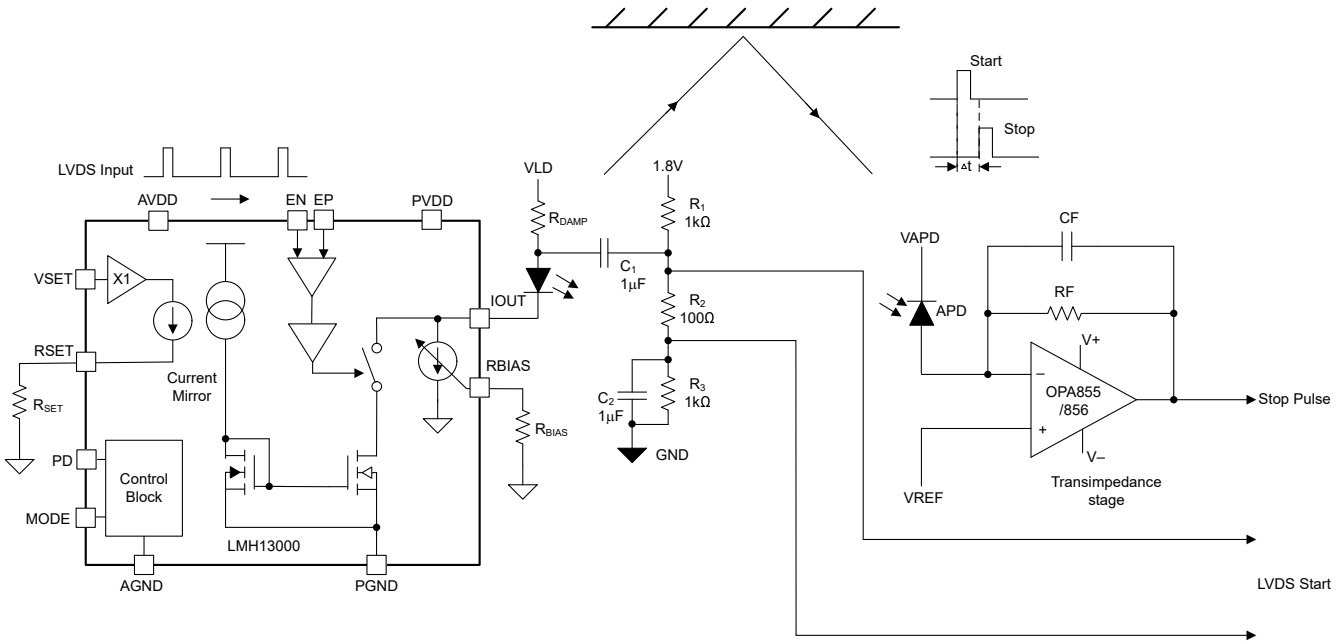

Figure 7-1. Optical Time of Flight Using LMH13000 on the Tx Path

Copyright © 2026 Texas Instruments Incorporated

7.2.1.1 Design Requirements

Table 7-1. Design Parameters

PARAMETER	VALUE
Generate narrow optical pulses	2ns
Optical rise time	<1ns
Electrical output power	2A
Instantaneous optical output power	1.5W
Optical power stability	< 2% across temperature

Table 7-2. Recommended Devices for Receive-Side TIA

DEVICE	INPUT TYPE	MINIMUM STABLE GAIN (V/V)	VOLTAGE NOISE (nV/√Hz)	INPUT CAPACITANCE (pF)	GAIN BANDWIDTH (GHz)
OPA855	Bipolar	7	0.98	0.8	8
OPA856	Bipolar	1	0.9	1.1	1.1
OPA858	CMOS	7	2.5	0.8	5.5
OPA859	CMOS	1	3.3	0.8	0.9
LMH6629	Bipolar	10	0.69	5.7	4

7.2.1.2 Detailed Design Procedure

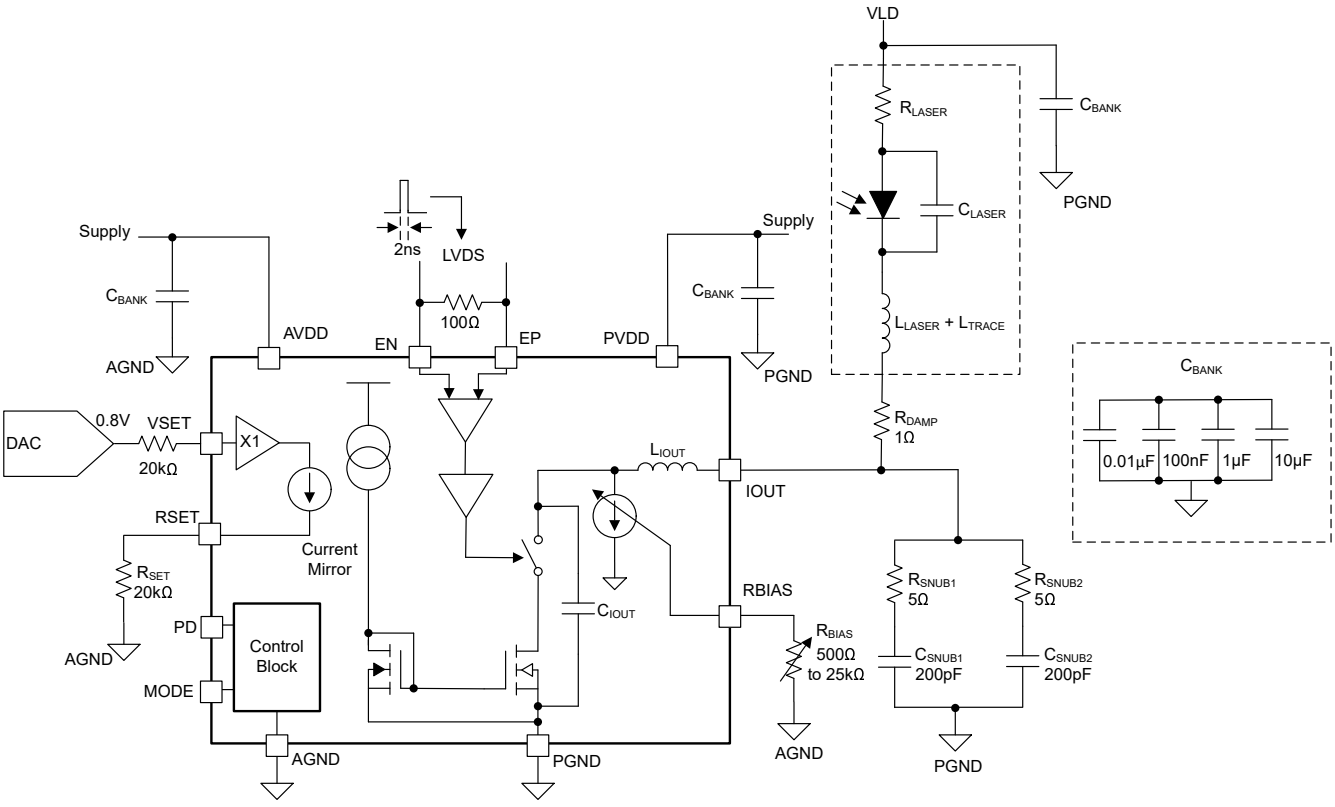

Figure 7-2. Transmit Path Schematic With the LMH13000

Based on the required optical power and rise time, the V105Q121A-940 is considered as the laser for the transmit path. The IOUT of the LMH13000 is connected to the cathode of the laser because the device is a sink-current driver. The anode of the laser is connected to a bias voltage, VLD. The required optical power is 1.5W; using the optical output power graph from the laser diode data sheet, an I_{OUT} of 2A is calculated. The MODE pin is tied to AVDD because the 2A I_{OUT} is supported in high-current mode. The PD pin is tied to AGND.

Copyright © 2026 Texas Instruments Incorporated

VSET is set to 0.8V to set up an I_{OUT} of 2A using the following equation. The VSET voltage is applied using a DAC through a 20kΩ series resistor.

$$I_{OUT} = \frac{VSET}{RSET} \times k;\ k = 50k \quad (6)$$

The required VLD voltage is a function of minimum required V_{IOUT}, V_F and IOUT path inductance. The minimum V_{IOUT} is inferred using the *Electrical Characteristics* tables.

$$VLD = MINV_{IOUT} + V_F + L \times \frac{dI_{OUT}}{dt} + I_{OUT} \times \left(R_{LASER} + R_{DAMP}\right) \quad (7)$$

Where V_F = forward bias voltage of the laser diode, L = L_{LASER} + L_{TRACE}, dI_{OUT} = 2A and dt = 1ns.

See Figure 5-27 for the required $MINV_{IOUT}$ for a specific I_{OUT}. As per Figure 5-27, $MINV_{IOUT}$ is ≅ 1V for an I_{OUT} of 2A. For 2A pulse, V_F = 1.85V (from the laser data sheet). Inductance, L (the sum of laser and board trace inductance), is estimated and measured to be approximately = 1.5nH. Adding these values results in a minimum required VLD of ≅ 6V (assuming R_{DAMP} = 0Ω). For dc, slow-rise-time, current-output applications, the L × dI_{OUT} / dt component is able to be made 0 in the previous equation.

To achieve a pulse duration of 2ns, a LVDS signal of > 250mV with a duration of 2ns is applied across the LVDS pins. Design the LVDS common-mode and differential voltage to be well within the maximum limits specified in the *Electrical Characteristics*.

This setup provides a preliminary guideline for generating a current pulse of 2A, with an on time of 2ns. To achieve a pulse train of a different frequency and duty cycle, simply apply the required logic signals (LVDS/ CMOS/TTL) to the EP and EN pins.

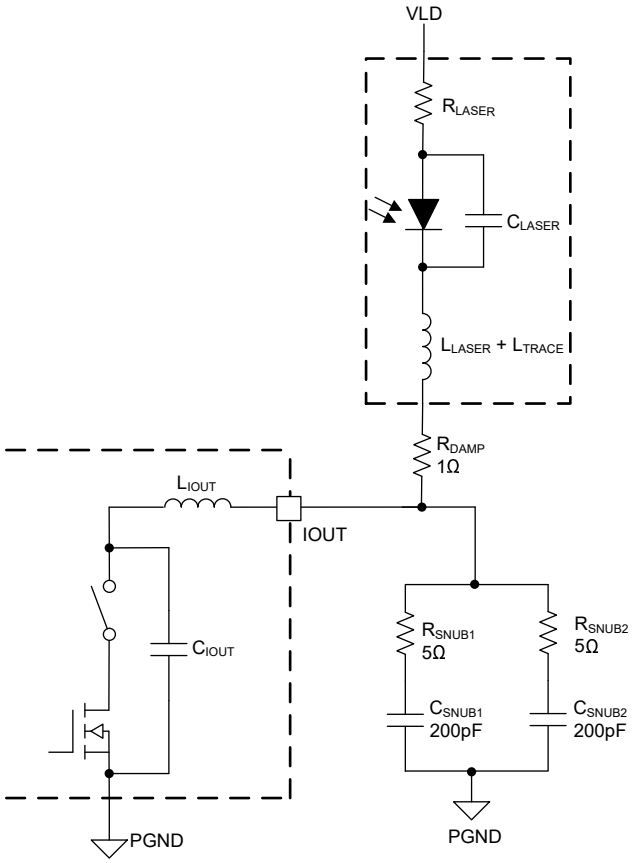

Figure 7-3. Second-Order RLC Circuit for the I_{OUT} Path

Copyright © 2026 Texas Instruments Incorporated

Observing the IOUT pulse response either in the electrical or optical domain gives the general direction required for tweaking of the circuit to achieve the required current-output response.

- The increased VLD voltage enables a faster rise time due to the higher voltage available to set up current, across the board and laser inductance. However, with a higher VLD, the overshoot increases proportionally.
- To achieve a critical response in the IOUT pulse, the goal of the design is to make zeta (**ζ**) = 1, for the second-order system shown in Figure 7-3. By adding a C_{SNUB} much greater than C_{IOUT}, the second-order circuit behaviors are determined mainly by the C_{SNUB} value.
- $$C_{SNUB} = 5 \times C_{IOUT} \quad (8)$$

  The C_{IOUT} for the minimum V_{IOUT} is found in Figure 5-12.
- C_{SNUB} calculates to approximately 300pF as C_{IOUT} ≅ 62pF for V_{IOUT} 6V.
- Substituting value of C_{SNUB}, $L_{LASER+TRACE}$ and R_{LASER} in the following formula:

$$\zeta = \frac{R_{LASER} + R_{DAMP} + R_{SNUB}}{2} \times \sqrt{\frac{C_{SNUB}}{L_{LASER} + L_{TRACE}}} \quad (9)$$

  Fine tune the R_{SNUB} to achieve the correct balance of rise time and overshoot. Add a snubber on both sides of the IOUT (see Figure 7-6 and Figure 7-7) to make the snubber most effective.
- If the overshoot and rise time balance is not satisfactory, an addition of a small-series damp resistor, R_{DAMP} enables a reduced overshoot current-output response. The addition of a damping series resistor pushes the ζ towards or over 1, to tune the RLC circuit towards a critically damped response.

The *Electrical Characteristics* table states that the accuracy at room temperature for a 2A output current in MODE = 1 is about 5%. Therefore, when set to 2A, I_{OUT} has the probability of not being accurate to exactly 2A, but is actually set to 2A ± 5%. This inaccuracy mandates adjusting V_{SET} slightly greater than or less than 0.8V to bring I_{OUT} to exactly 2A. After this adjustment, I_{OUT} is accurate to 2A ±1.3% across temperature; see also the I_{OUT} variation across temperature in Section 5.6.

For output pulses smaller than the settling time of I_{OUT}, the peak amplitude is predominantly set by the overshoot value. In such cases, tune VSET to adjust for the peak overshoot value.

7.2.1.3 Application Curve

The optical pulse response is captured using the LMH13000 driving the OSRAM laser on the Tx path, and captured using APD + TIA on the Rx path. The TIA output is plotted to showcase a 2ns pulse width generation and capture.

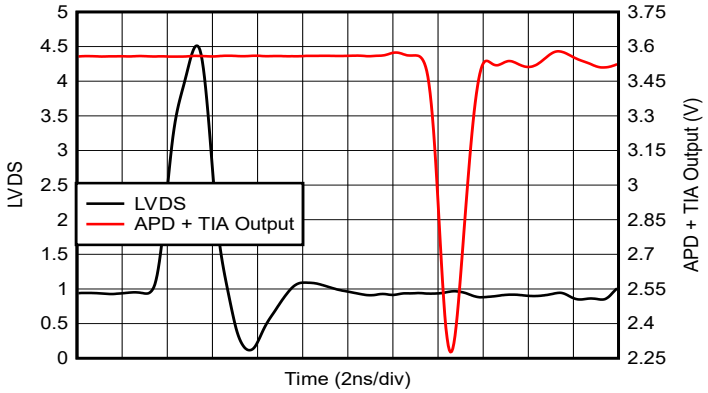

VLD = 5V, R_{DAMP} = 1Ω, VSET = 0.8V

Figure 7-4. LMH13000 on Tx, APD + TIA on Rx, Optical Response

7.2.2 Automatic Power-Control Loop Using the LMH13000

For a stable optical power output in laser drive systems, an APC loop maintains constant performance. Fluctuations in temperature, aging effects, and external conditions introduce variations in laser behavior. An APC loop uses optical feedback to dynamically adjust the current through the laser and keep the optical output fixed.

The following schematic supports both dc and pulsed laser operation by using the laser back-facet photodiode.

When the mux operates in high mode, the APC loop closes, and the optical output from the laser LD tunes so that the current picked up by PD converts into a voltage equal to the V_{Sense} voltage across the R_S resistance. Adjusting the V_{REF} voltage applied to the TLV9001 error amplifier directly controls the optical power. When the mux operates in low mode, the voltage set by the previous APC closed-loop mode stores across C1. This voltage drives the VSET of LMH13000 and fixes the IOUT at the correct level to deliver the required optical power. The user toggles between low and high modes to periodically correct variations in optical output due to external conditions.

For detailed information, see Automatic Power Control for Laser Diodes Using LMH13000

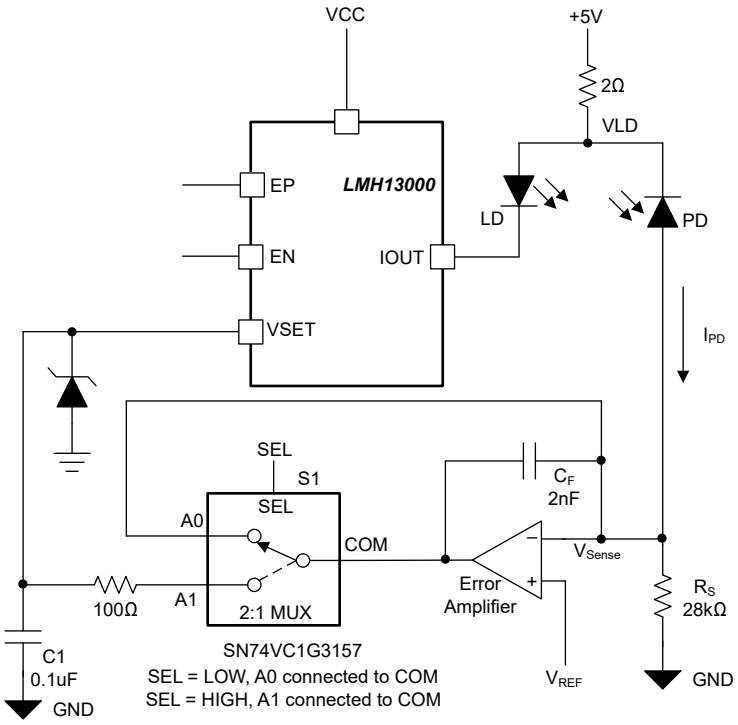

Figure 7-5. Automatic Power Control Loop Using the LMH13000 in Pulsed Operation

Copyright © 2026 Texas Instruments Incorporated

7.3 Power Supply Recommendations

AVDD and PVDD are the two power pins for the LMH13000. Connect AVDD and PVDD to the same electrical potential. Provide separate decoupling capacitors to each pin.

During the LMH13000 power-up, both AVDD and PVDD are sequenced (ramped-up) together. A small mismatch in power-up timing due to the difference in decoupling capacitors is tolerated. Make sure that the MODE pin voltage < AVDD and PVDD for all conditions. To fulfill this condition, tie the MODE pin to AVDD or AGND at all times. Post AVDD and PVDD power up, other pins can be powered in any sequence.

Restrict the voltage on the IOUT to a maximum of 18V. This restriction includes any overshoot that occurs during output-current-pulse fall time. The VLD power-up sequence is not important, but TI recommends to power up VLD after AVDD and PVDD power up.

7.4 Layout

7.4.1 Layout Guidelines

Use the following recommendations to achieve nanosecond rise time on the output current. For dc applications and applications that require relaxed transient performance, the layout guidelines are able to be slightly deviated.

- Placement of R_{SNUB} and C_{SNUB}:
  - Place R_{SNUB} and C_{SNUB} as close as possible to the device.
  - Any parasitic series inductance in the snubber path reduces the effectiveness of the snubber. Use low inductance components to enhance effectiveness.
  - Add two snubber circuits on either side of the IOUT and PGND pins (see Figure 7-4).
- Capacitor bank placement:
  - A capacitor bank is required to provide fast transient currents to the VLD and PVDD supply pins.
  - Place the capacitor bank as close as possible to the VLD and PVDD pins.
  - The capacitor bank typically consists of a low-ESL capacitor as the first capacitor closest to the pin.
- Connection between PVDD and AVDD:
  - PVDD and AVDD must be star connected. Add series ferrite beads and narrow traces to help minimize high-frequency noise and interference between the two pins. Both supplies must be at the same electrical potential.
  - Each supply must have dedicated decoupling capacitor to provide sufficient transient current.
- Routing of EP and EN for the LVDS pins:
  - Route EP and EN differentially and terminate with a 100Ω resistance. Differential routing improves signal integrity and reduces electromagnetic interference (EMI).
- IOUT trace design:
  - C_{BANK}, VLD, LOAD, I_{OUT}, and PGND must form a tight loop to reduce effect of trace inductance.
  - The I_{OUT} trace must have a thick copper pour to handle high current and reduce trace inductance effectively.
  - In situations where the loop cannot be minimized, route the *to* and *return* parts of the VLD C_{BANK} on top of each other. This routing is achieved by using top and second layers of the PCB to carry currents in the opposite direction. This layout technique enables reduction of common source inductance (see also Figure 7-7).
- Thermal performance
  - Place thermal vias below the I_{OUT} and PGND pins to dissipate heat efficiently.
  - A thermal plane on the bottom layer of the PCB acts as a excellent heat sink; however, addition of a plane or heat sink increases capacitance on the IOUT. This increase in capacitance results in increase of overshoot in the I_{OUT} pulse.
  - If the overshoot is undesired, tune the snubber appropriately or increase the series damp resistance, R_{DAMP}.

Copyright © 2026 Texas Instruments Incorporated

7.4.2 Layout Example

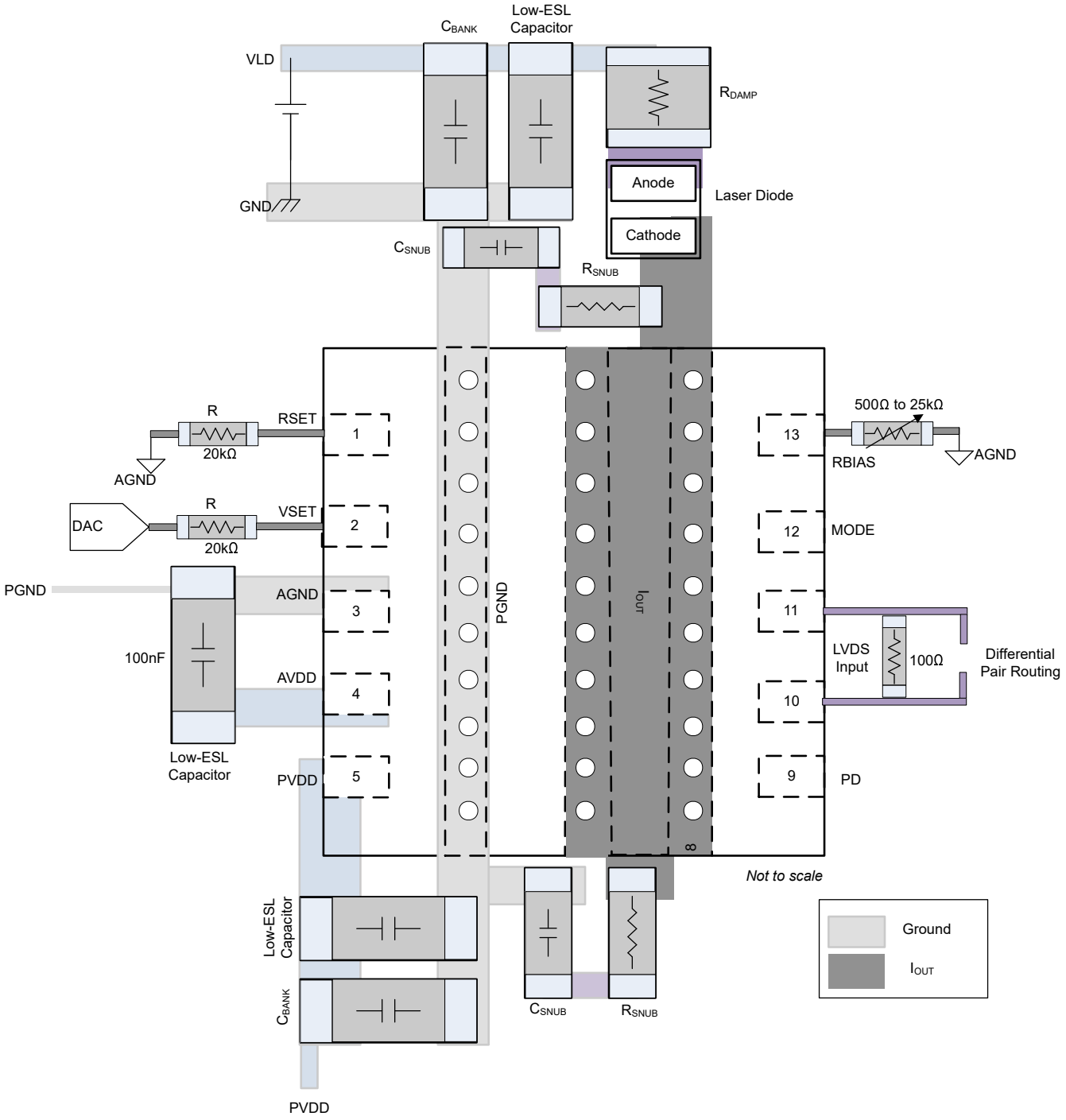

Figure 7-6. Layout Example - SMD Package

Copyright © 2026 Texas Instruments Incorporated

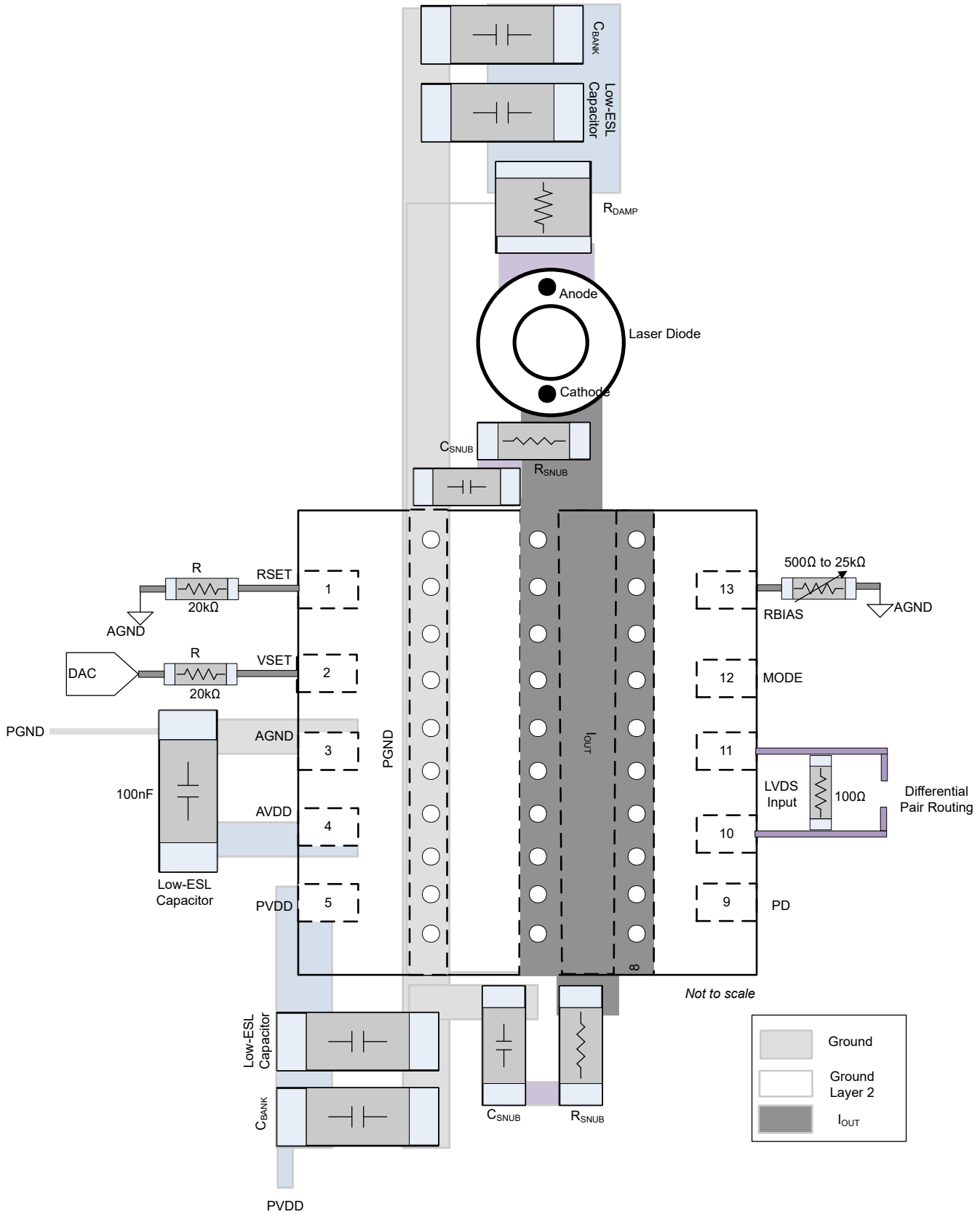

Figure 7-7. Layout Example - TO220 Package

8 Device and Documentation Support

TI offers an extensive line of development tools. Tools and software to evaluate the performance of the device, generate code, and develop solutions are listed below.

8.1 Receiving Notification of Documentation Updates

To receive notification of documentation updates, navigate to the device product folder on ti.com. Click on *Notifications* to register and receive a weekly digest of any product information that has changed. For change details, review the revision history included in any revised document.

8.2 Support Resources

TI E2E™ support forums are an engineer's go-to source for fast, verified answers and design help — straight from the experts. Search existing answers or ask your own question to get the quick design help you need.

Linked content is provided "AS IS" by the respective contributors. They do not constitute TI specifications and do not necessarily reflect TI's views; see TI's Terms of Use.

8.3 Trademarks

HotRod™ and TI E2E™ are trademarks of Texas Instruments.
All trademarks are the property of their respective owners.

8.4 Electrostatic Discharge Caution



This integrated circuit can be damaged by ESD. Texas Instruments recommends that all integrated circuits be handled with appropriate precautions. Failure to observe proper handling and installation procedures can cause damage.

ESD damage can range from subtle performance degradation to complete device failure. Precision integrated circuits may be more susceptible to damage because very small parametric changes could cause the device not to meet its published specifications.

8.5 Glossary

TI Glossary	This glossary lists and explains terms, acronyms, and definitions.

Copyright © 2026 Texas Instruments Incorporated

9 Revision History

NOTE: Page numbers for previous revisions may differ from page numbers in the current version.

Changes from Revision D (November 2025) to Revision E (March 2026)	Page
• Added *Fault Detection Mechanism* section in *Feature Description*	18

Changes from Revision C (September 2025) to Revision D (November 2025) **Page**

- Changed output currents from 50mA to 5mA in *Features* 1
- Changed low current from 50mA to 5mA in Table 4-1, *Pin Functions* 3
- Changed VSET from 0.1V to 0.01V in *Recommended Operating Conditions* 4
- Changed I_{OUT} from 0.05A to 0.005A in *Electrical Characteristics for Low-Current Mode, MODE = 0* 5
- Changed VSET from 0.1V to 0.01V in *Electrical Characteristics for Low-Current Mode, MODE = 0* 5
- Changed V_{SET} from 0.1V to 0.01V and I_{OUT} from 50mA to 5mA in low-current mode (MODE =0)..... 19

Changes from Revision B (May 2025) to Revision C (September 2025) **Page**

- Updated the title..... 1
- Changed Rise time from 1ns to 800ps in *Features* 1
- Changed Pulse train from "up to 250MHz" to "DC to 250MHz" for clarity in *Features* 1
- Added Monolithic laser driver eliminates the need for external FET in *Features* 1
- Updated text in *Description* for clarity..... 1
- Updated Adjustable current from 50mA to 5mA and corresponding V_{SET} from 100mV to 10mV respectively . 5
- Updated IOUT accuracy from ±12% to ±14.5%..... 5
- Updated IOUT accuracy from ±9% to ±10.5%..... 7
- Updated Static quiescent current from 23mA to 23.5mA..... 7
- Added Figures 5-29, *Propagation Delay vs Temperature* and 5-30, *Propagation Delay Error Post 3 Temperature Calibration* 9
- Updated Figures 5-1, *V_{SET} to I_{OUT} Transfer Characteristics* and 5-2, *V_{SET} to I_{OUT} Transfer Characteristics* 9
- Added *Propagation Delay With Temperature* 17
- Added *Automatic Power-Control Loop Using the LMH13000* 24

Changes from Revision A (March 2025) to Revision B (May 2025) **Page**

- Changed document status from advanced information (preview) to production data (active)..... 1

10 Mechanical, Packaging, and Orderable Information

The following pages include mechanical, packaging, and orderable information. This information is the most current data available for the designated devices. This data is subject to change without notice and revision of this document. For browser-based versions of this data sheet, refer to the left-hand navigation.

Copyright © 2026 Texas Instruments Incorporated

PACKAGING INFORMATION

Orderable part number	Status (1)	Material type (2)	Package | Pins	Package qty | Carrier	RoHS (3)	Lead finish/ Ball material (4)	MSL rating/ Peak reflow (5)	Op temp (°C)	Part marking (6)
LMH13000RQER	Active	Production	WQFN-HR (RQE) | 13	3000 | LARGE T&R	Yes	NIPDAU	Level-2-260C-1 YEAR	-40 to 125	L13K

(1) **Status:** For more details on status, see our product life cycle.

(2) **Material type:** When designated, preproduction parts are prototypes/experimental devices, and are not yet approved or released for full production. Testing and final process, including without limitation quality assurance, reliability performance testing, and/or process qualification, may not yet be complete, and this item is subject to further changes or possible discontinuation. If available for ordering, purchases will be subject to an additional waiver at checkout, and are intended for early internal evaluation purposes only. These items are sold without warranties of any kind.

(3) **RoHS values:** Yes, No, RoHS Exempt. See the TI RoHS Statement for additional information and value definition.

(4) **Lead finish/Ball material:** Parts may have multiple material finish options. Finish options are separated by a vertical ruled line. Lead finish/Ball material values may wrap to two lines if the finish value exceeds the maximum column width.

(5) **MSL rating/Peak reflow:** The moisture sensitivity level ratings and peak solder (reflow) temperatures. In the event that a part has multiple moisture sensitivity ratings, only the lowest level per JEDEC standards is shown. Refer to the shipping label for the actual reflow temperature that will be used to mount the part to the printed circuit board.

(6) **Part marking:** There may be an additional marking, which relates to the logo, the lot trace code information, or the environmental category of the part.

Multiple part markings will be inside parentheses. Only one part marking contained in parentheses and separated by a "~" will appear on a part. If a line is indented then it is a continuation of the previous line and the two combined represent the entire part marking for that device.

Important Information and Disclaimer: The information provided on this page represents TI's knowledge and belief as of the date that it is provided. TI bases its knowledge and belief on information provided by third parties, and makes no representation or warranty as to the accuracy of such information. Efforts are underway to better integrate information from third parties. TI has taken and continues to take reasonable steps to provide representative and accurate information but may not have conducted destructive testing or chemical analysis on incoming materials and chemicals. TI and TI suppliers consider certain information to be proprietary, and thus CAS numbers and other limited information may not be available for release.

In no event shall TI's liability arising out of such information exceed the total purchase price of the TI part(s) at issue in this document sold by TI to Customer on an annual basis.

TAPE AND REEL INFORMATION

REEL DIMENSIONS

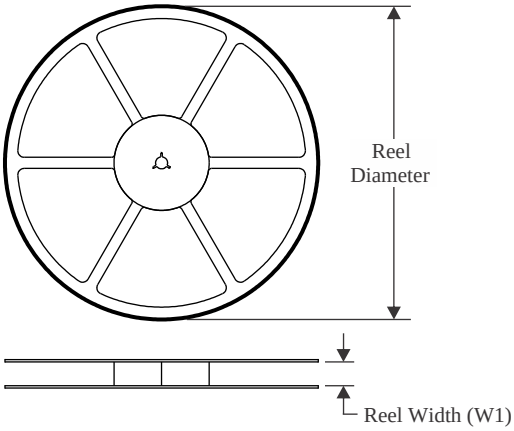

TAPE DIMENSIONS

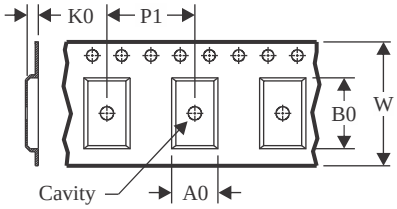

A0	Dimension designed to accommodate the component width
B0	Dimension designed to accommodate the component length
K0	Dimension designed to accommodate the component thickness
W	Overall width of the carrier tape
P1	Pitch between successive cavity centers

QUADRANT ASSIGNMENTS FOR PIN 1 ORIENTATION IN TAPE

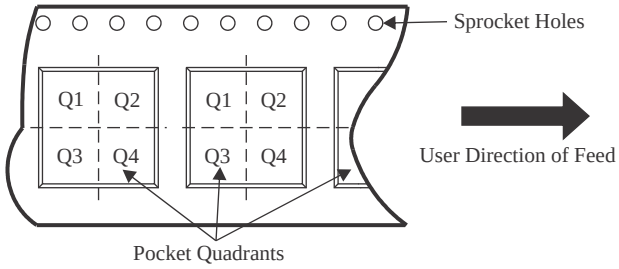

*All dimensions are nominal

Device	Package Type	Package Drawing	Pins	SPQ	Reel Diameter (mm)	Reel Width W1 (mm)	A0 (mm)	B0 (mm)	K0 (mm)	P1 (mm)	W (mm)	Pin1 Quadrant
LMH13000RQER	WQFN-HR	RQE	13	3000	330.0	12.4	3.3	3.8	1.2	8.0	12.0	Q2

TAPE AND REEL BOX DIMENSIONS

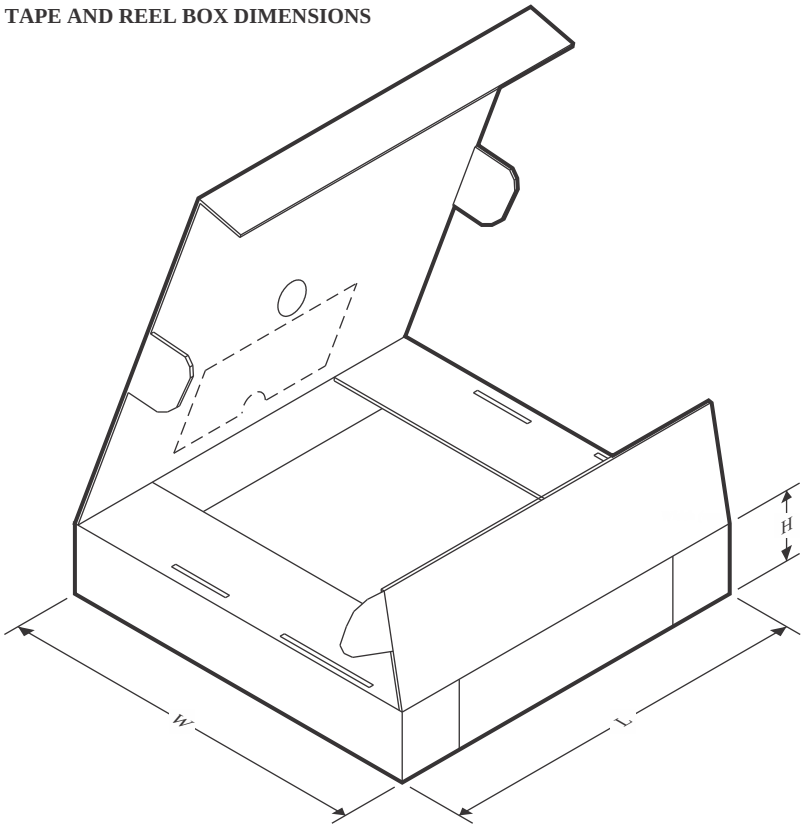

*All dimensions are nominal

Device	Package Type	Package Drawing	Pins	SPQ	Length (mm)	Width (mm)	Height (mm)
LMH13000RQER	WQFN-HR	RQE	13	3000	367.0	367.0	35.0

PACKAGE OUTLINE

RQE0013A

WQFN-HR - 0.8 mm max height

PLASTIC QUAD FLATPACK- NO LEAD

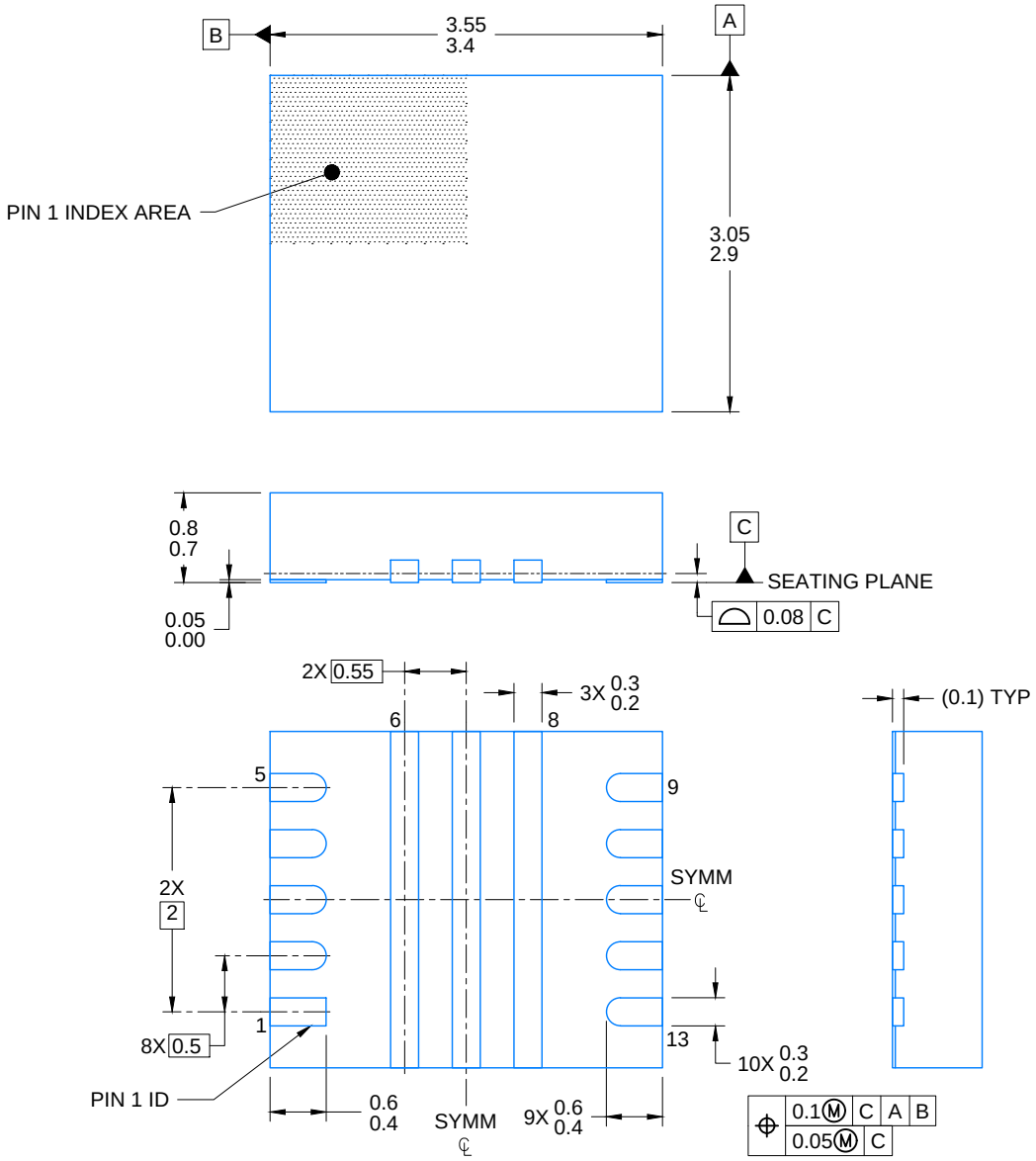

4225116/B 11/2019

NOTES:

1. All linear dimensions are in millimeters. Any dimensions in parenthesis are for reference only. Dimensioning and tolerancing per ASME Y14.5M.
2. This drawing is subject to change without notice.

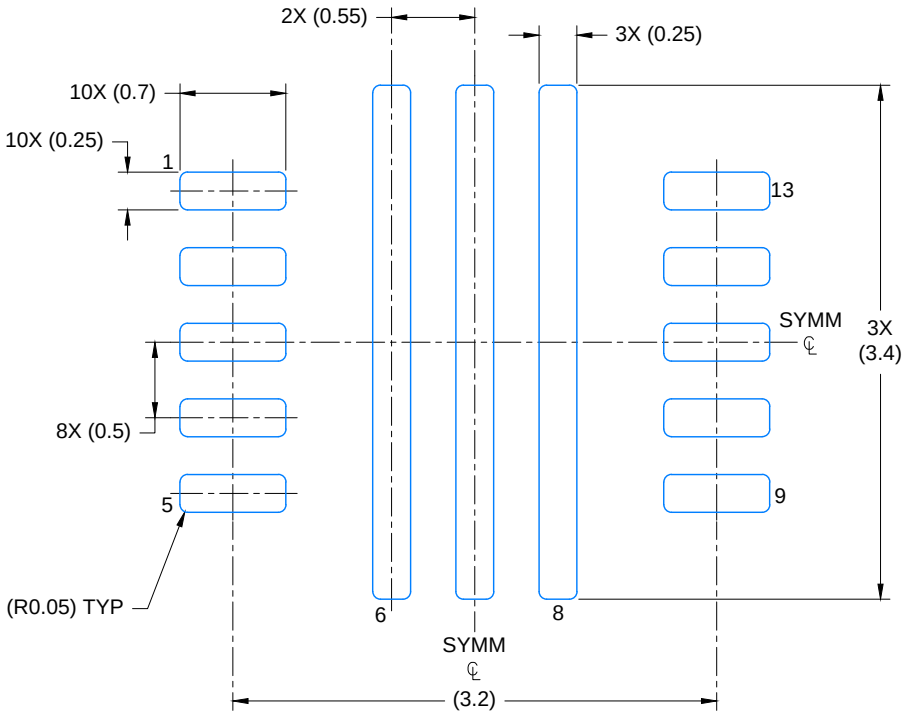

LAND PATTERN EXAMPLE
EXPOSED METAL SHOWN
SCALE: 20X

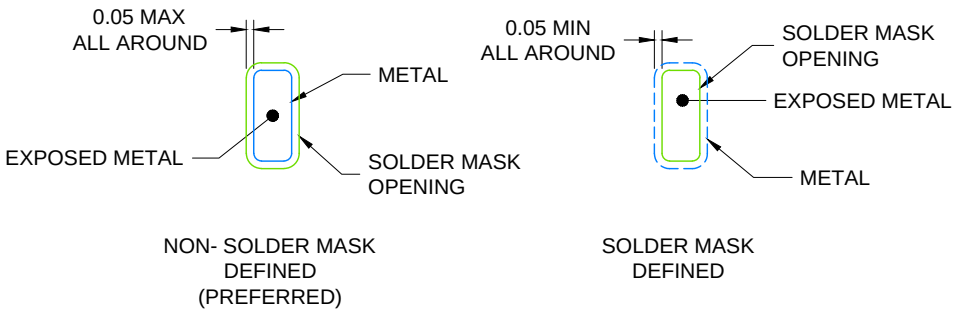

SOLDER MASK DETAILS

4225116/B 11/2019

NOTES: (continued)

3. For more information, see Texas Instruments literature number SLUA271 (www.ti.com/lit/slua271).
4. Solder mask tolerances between and around signal pads can vary based on board fabrication site.

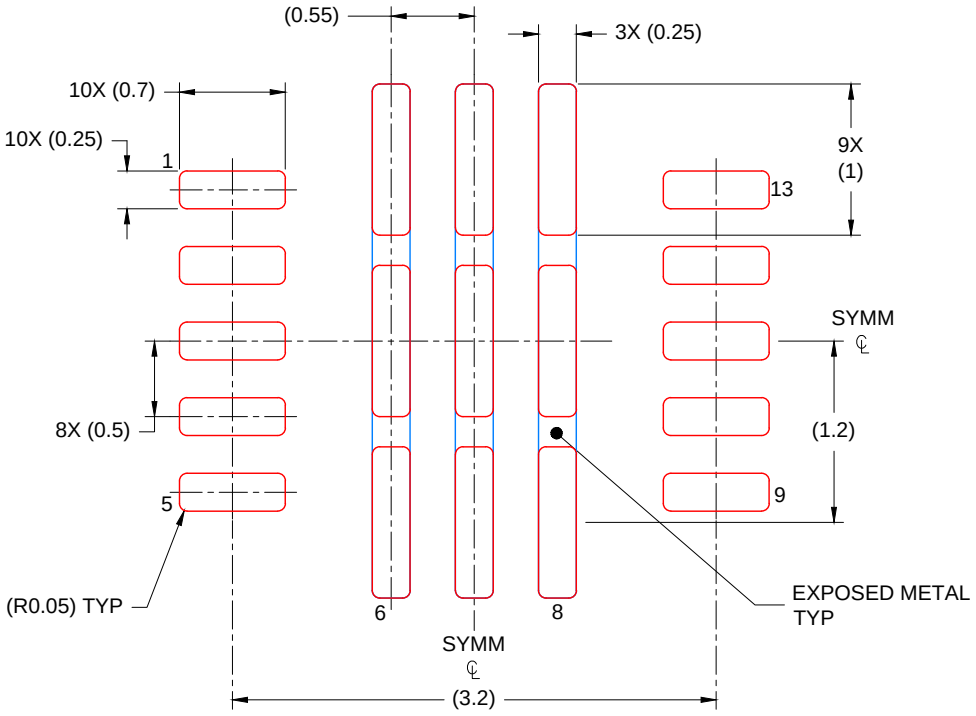

SOLDER PASTE EXAMPLE
BASED ON 0.125 mm THICK STENCIL

PADS 6-8
87% PRINTED SOLDER COVERAGE BY AREA
SCALE: 20X

4225116/B 11/2019

NOTES: (continued)

5. Laser cutting apertures with trapezoidal walls and rounded corners may offer better paste release. IPC-7525 may have alternate design recommendations.

IMPORTANT NOTICE AND DISCLAIMER

TI PROVIDES TECHNICAL AND RELIABILITY DATA (INCLUDING DATASHEETS), DESIGN RESOURCES (INCLUDING REFERENCE DESIGNS), APPLICATION OR OTHER DESIGN ADVICE, WEB TOOLS, SAFETY INFORMATION, AND OTHER RESOURCES “AS IS” AND WITH ALL FAULTS, AND DISCLAIMS ALL WARRANTIES, EXPRESS AND IMPLIED, INCLUDING WITHOUT LIMITATION ANY IMPLIED WARRANTIES OF MERCHANTABILITY, FITNESS FOR A PARTICULAR PURPOSE OR NON-INFRINGEMENT OF THIRD PARTY INTELLECTUAL PROPERTY RIGHTS.

These resources are intended for skilled developers designing with TI products. You are solely responsible for (1) selecting the appropriate TI products for your application, (2) designing, validating and testing your application, and (3) ensuring your application meets applicable standards, and any other safety, security, regulatory or other requirements.

These resources are subject to change without notice. TI grants you permission to use these resources only for development of an application that uses the TI products described in the resource. Other reproduction and display of these resources is prohibited. No license is granted to any other TI intellectual property right or to any third party intellectual property right. TI disclaims responsibility for, and you fully indemnify TI and its representatives against any claims, damages, costs, losses, and liabilities arising out of your use of these resources.

TI’s products are provided subject to TI’s Terms of Sale, TI’s General Quality Guidelines, or other applicable terms available either on ti.com or provided in conjunction with such TI products. TI’s provision of these resources does not expand or otherwise alter TI’s applicable warranties or warranty disclaimers for TI products. Unless TI explicitly designates a product as custom or customer-specified, TI products are standard, catalog, general purpose devices.

TI objects to and rejects any additional or different terms you may propose.

Copyright © 2026, Texas Instruments Incorporated

Last updated 10/2025

ENTEGRECİ

Bu belge www.entegreci.com üzerinden sunulmaktadır.

Elektronik komponent tedarikinde Entegreci

Entegreci, Eskişehir merkezli, Türkiye geneline satış yapan bir elektronik komponent mağazasıdır. Entegreler (IC), mikrodenetleyiciler, transistörler, diyotlar, pasif elemanlar, konnektörler, modüller ve geliştirme kartları tek adetten seri üretim adetlerine kadar satılır. Ürün sayfalarında güncel stok durumunu, fiyatı ve datasheet bağlantısını bulabilirsiniz.

Parça koduyla arama

Üretici parça numarasını yazın; stok ve fiyatı hemen görün.

www.entegreci.com

Ürün kategorileri

Entegreden kapasitöre tüm elektronik komponent kategorileri.

Kategorilere göz atın

Üreticiler

Aradığınız üreticinin ürünlerini tek sayfada inceleyin.

Üreticileri görün

Toplu alım ve teklif

Listede olmayan ya da yüksek adetli parçalar için teklif isteyin.

Teklif isteyin

www.entegreci.com | **destek@entegreci.com** | **0850 305 90 34**

Entegreci is an online electronic components store based in Türkiye. Search by manufacturer part number to see stock, prices and datasheets for integrated circuits, microcontrollers, transistors, passive components and connectors, or request a quote for parts that are not listed.

Bu sayfa Entegreci tarafından eklenmiştir. Belgenin önceki sayfaları asıl yayıncısına aittir ve içeriği değiştirilmemiştir; en güncel sürüm için belgenin yayıncısına başvurun.