LinkSwitch-TN2 Family for Automotive

Highly Energy Efficient Switcher IC with Integrated System Level Protection for Low Component-Count Power Supplies

Product Highlights

Highest Performance and Design Flexibility

- Supports buck, buck-boost and flyback topologies
- Wide input voltage 30 VDC to 550 VDC
- Excellent load and line regulation
- 66 kHz operation with accurate current limit
  - Allows the use of low-cost off-the-shelf inductors
  - Reduces size and cost of magnetics and output capacitor
- Frequency jittering reduces EMI filter complexity
- Pin-out simplifies PCB heat sinking
- AEC-Q100 qualified
- Fab and assembly are IATF16949 certified

Enhanced Safety and Reliability Features

- Auto-restart for short-circuit and open loop faults
- Output overvoltage protection (OVP)
- Hysteretic over-temperature protection (OTP)
- Extended creepage between DRAIN pin and all other pins improves field reliability
- 750 V MOSFET rating for excellent surge withstand

EcoSmart™– Extremely Energy Efficient

- Standby supply current <100 µA
- On/Off control provides constant efficiency over a wide load range
- Easily meets all global energy efficiency regulations
- No-load consumption <50 mW

Application

- Auxiliary power supplies for automotive HVAC, climate control, DC/DC converter, and onboard charger
- Emergency power supply for traction inverter

Description

The LinkSwitch™-TN2 family of ICs for automotive power supplies provide significant reduction in component count compared to traditional discrete solutions making it highly reliable. The device family supports buck, buck-boost and flyback converter topologies. Each device incorporates a 750 V power MOSFET, oscillator, On/Off control, a high-voltage switched current source for self-biasing, frequency jittering, fast (cycle-by-cycle) current limit, hysteretic thermal shutdown, and output and overvoltage protection circuitry onto a monolithic IC.

LinkSwitch-TN2 ICs consume very little current in standby resulting in power supply designs that meet <50 mW no-load input at 400 VDC input. A full suite of protection features enable safe and reliable power supplies protecting the device and the system against input and output overvoltage faults, device over-temperature faults, lost regulation, and power supply output overload or short-circuit faults.

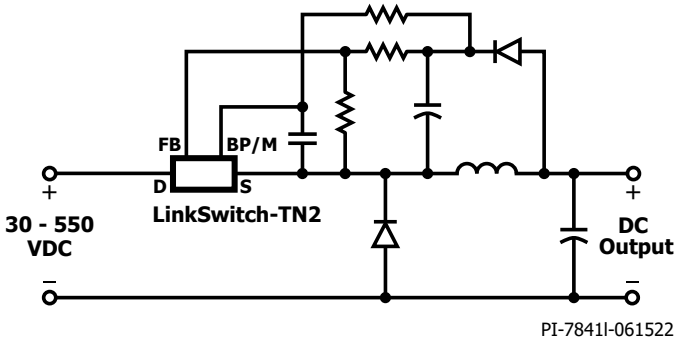

Figure 1. Typical Buck Converter Application (See Application Examples Section for Other Circuit Configurations).



Figure 2. Package Option G: SMD-8C.

Output Current Table[1]

Product[2]	30 VDC	400 VDC
LNK3206GQ	270 mA	360 mA
LNK3209GQ	650 mA	850 mA

Table 1. Output Current Table.

Notes:

1. Typical output current in a non-isolated buck converter with devices operating at default current limit and adequate heat sinking. Output power capability depends on respective output voltage and thermal requirements.
2. Package: G: SMD-8C.

This Product is Covered by Patents and/or Pending Patent Applications.

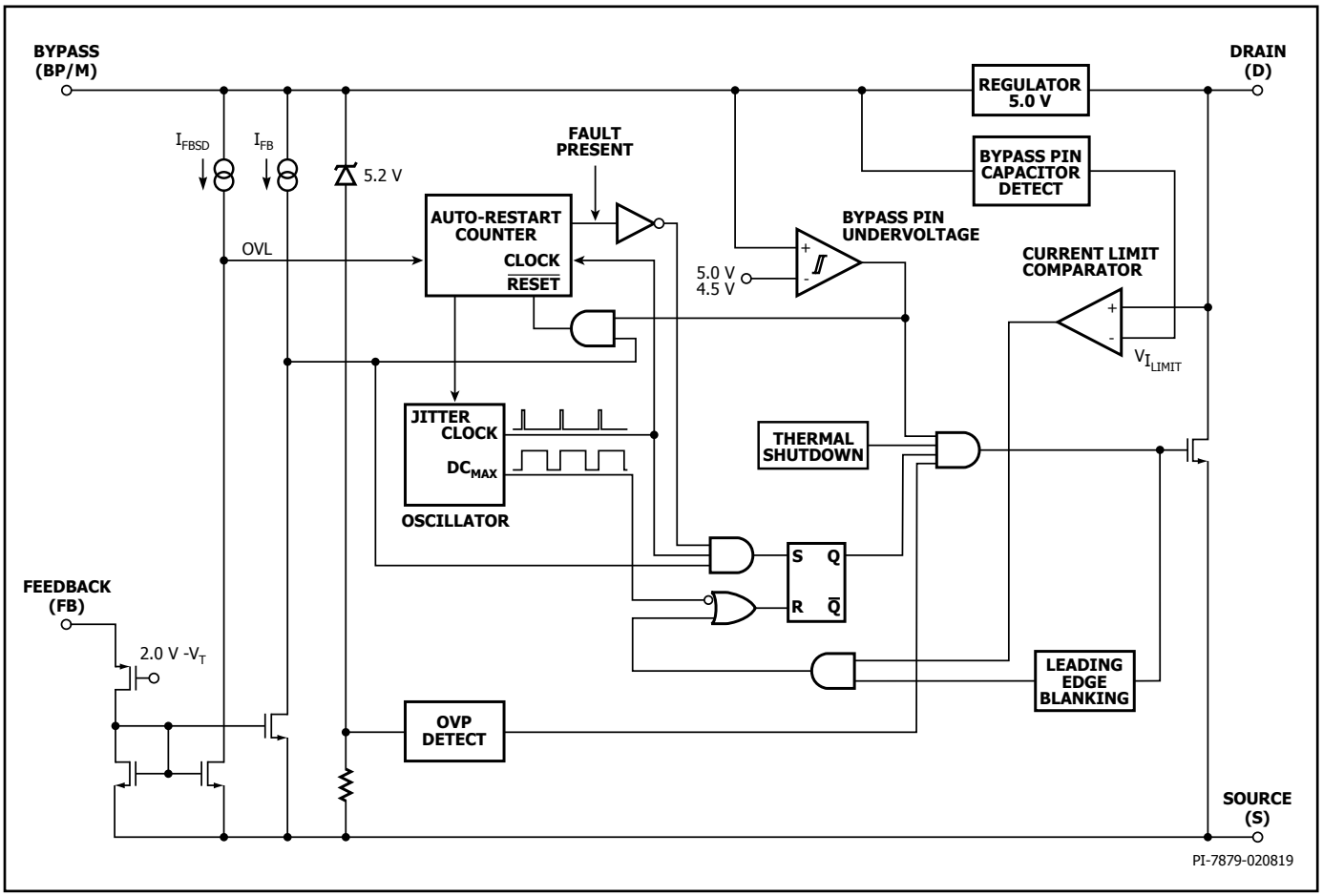

Figure 3. Functional Block Diagram.

Pin Functional Description

DRAIN (D) Pin:
Power MOSFET drain connection. Provides internal operating current for both start-up and steady-state operation.

BYPASS (BP/M) Pin:
This pin has multiple functions:

- It is the connection point for an external bypass capacitor for the internally generated 5.0 V supply.
- It is a mode selector for the current limit value, depending on the value of the capacitance added. Use of a 0.1 µF capacitor results in the standard current limit value. Use of a 1 µF capacitor results in the current limit being reduced, allowing design with lowest cost surface mount buck chokes.
- It provides a shutdown function. When the current into the BYPASS pin exceeds $I_{BP(SD)}$ for a time equal to 2 to 3 cycles of the internal oscillator (f_{OSC}), the device enters auto-restart. This can be used to provide an output overvoltage protection function with external circuitry.

FEEDBACK (FB) Pin:
During normal operation, switching of the power MOSFET is controlled by the FEEDBACK pin. MOSFET switching is terminated when a current greater than I_{FB} (49 µA) is delivered into this pin. Line overvoltage protection is detected when a current greater than $I_{FB(SD)}$ is delivered into this pin for 2 consecutive switching cycles.

SOURCE (S) Pin:
This pin is the power MOSFET source connection. It is also the ground reference for the BYPASS and FEEDBACK pins.

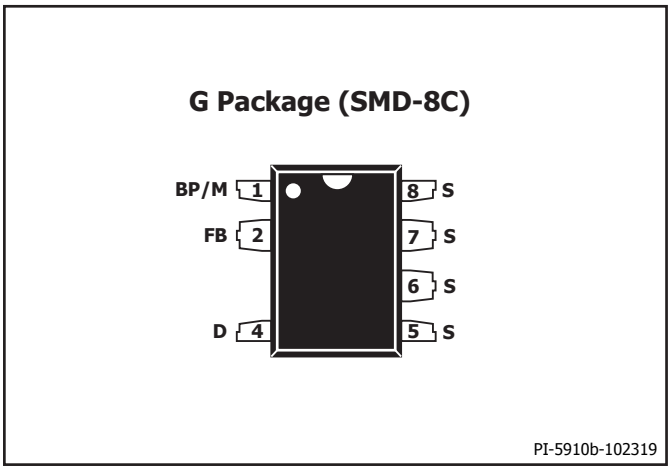

Figure 4. Pin Configuration.

LinkSwitch-TN2 Functional Description

LinkSwitch-TN2 combines a high-voltage power MOSFET switch with a power supply controller in one device. Unlike conventional PWM (pulse width modulator) controllers, LinkSwitch-TN2 uses a simple ON/OFF control to regulate the output voltage. The LinkSwitch-TN2 controller consists of an oscillator, feedback (sense and logic) circuit, 5.0 V regulator, BYPASS pin undervoltage circuit, over-temperature protection, line and output overvoltage protection, frequency jittering, current limit circuit, leading edge blanking and a 750 V power MOSFET. The LinkSwitch-TN2 incorporates additional circuitry for auto-restart.

Oscillator

The typical oscillator frequency is internally set to an average of f_{OSC} (66 kHz). Two signals are generated from the oscillator: the maximum duty cycle signal (DC_{MAX}) and the clock signal that indicates the beginning of each cycle.

The LinkSwitch-TN2 oscillator incorporates circuitry that introduces a small amount of frequency jitter, typically 4 kHz peak-to-peak, to minimize EMI emission. The modulation rate of the frequency jitter is set to 1 kHz to optimize EMI reduction for both average and quasi-peak emissions. The frequency jitter should be measured with the oscilloscope triggered at the falling edge of the DRAIN waveform. The waveform in Figure 5 illustrates the frequency jitter of the LinkSwitch-TN2.

Soft-Start

At power-up or during a restart attempt in auto-restart, the device applies a soft-start by temporarily reducing the oscillator frequency. LNK3206GQ reduces the frequency to $f_{OSC(SS)}$ (typically 33 kHz). LNK3209GQ reduces the oscillator frequency to initially 16.5 kHz followed by a stepwise increase to 22 kHz and 33 kHz over a period of 256 switching cycles. Soft-start terminates and the device continues operating at the nominal oscillator frequency f_{OSC} either after 256 switching cycles or if the output voltage reaches regulation.

Feedback Input Circuit

The feedback input circuit at the FEEDBACK pin consists of a low impedance source follower output set at V_{FB} (2.0 V). When the current delivered into this pin exceeds I_{FB} (49 µA), a low logic level (disable) is generated at the output of the feedback circuit. This output is sampled at the beginning of each cycle on the rising edge of the clock signal. If high, the power MOSFET is turned on for that cycle (enabled), otherwise the power MOSFET remains off (disabled). The sampling is done only at the beginning of each cycle. Subsequent changes in the FEEDBACK pin voltage or current during the remainder of the cycle do not impact the MOSFET enable/disable status. If a current greater than $I_{FB(SD)}$ is injected into the FEEDBACK pin while the MOSFET is enabled for at least two consecutive cycles the part will stop switching and enter auto-restart off-time. Normal switching resumes after the auto-restart off-time expires.

5.0 V Regulator and 5.2 V Shunt Voltage Clamp

The 5.0 V regulator charges the bypass capacitor connected to the BYPASS pin to V_{BP} by drawing a current from the voltage on the DRAIN, whenever the MOSFET is off. The BYPASS pin is the internal supply voltage node for the LinkSwitch-TN2. When the MOSFET is on, the LinkSwitch-TN2 runs off of the energy stored in the bypass capacitor. Extremely low power consumption of the internal circuitry allows the LinkSwitch-TN2 to operate continuously from the current drawn from the DRAIN pin. A bypass capacitor value of 0.1 µF is sufficient for both high frequency decoupling and energy storage.

In addition, there is a shunt regulator clamping the BYPASS pin at $V_{BP(SHUNT)}$ (5.2 V) when current is provided to the BYPASS pin through an external resistor. This facilitates powering of LinkSwitch-TN2 externally through a bias winding to decrease the no-load consumption to about 10 mW. The device stops switching instantly and enters auto-restart when a current $\geq I_{BP(SD)}$ is delivered into the BYPASS pin.

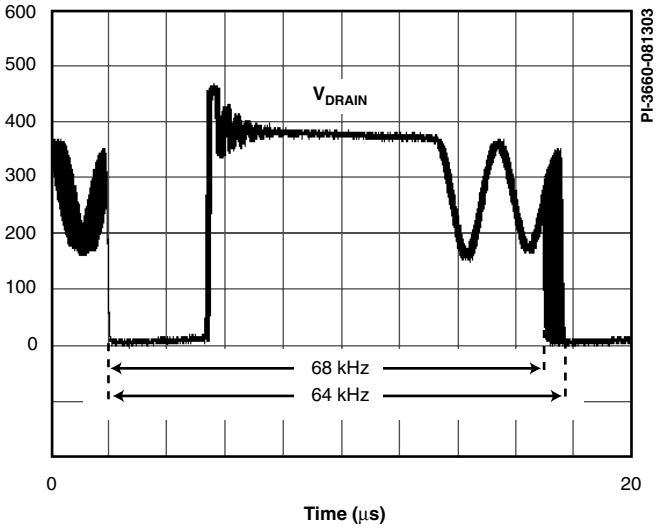

Figure 5. Frequency Jitter.

BYPASS Pin Undervoltage

The BYPASS pin undervoltage circuitry disables the power MOSFET when the BYPASS pin voltage drops below $V_{BP} - V_{BP(H)}$ (approximately 4.5 V). Once the BYPASS pin voltage drops below this threshold, it must rise back to V_{BP} to enable (turn-on) the power MOSFET.

Over-Temperature Protection

The thermal shutdown circuitry senses the die temperature. The threshold is set at T_{SD} (142 °C typical) with a 30 °C ($T_{SD(H)}$) hysteresis. When the die temperature rises above T_{SD} the power MOSFET is disabled and remains disabled until the die temperature falls to $T_{SD} - T_{SD(H)}$, at which point it is re-enabled.

Current Limit

The current limit circuit senses the current in the power MOSFET. When this current exceeds the internal threshold (I_{LIMIT}), the power MOSFET is turned off for the remainder of that cycle. The leading edge blanking circuit inhibits the current limit comparator for a short time (t_{LEB}) after the power MOSFET is turned on. This leading edge blanking time has been set so that current spikes caused by capacitance and rectifier reverse recovery time will not cause premature termination of the switching pulse. Current limit can be selected using the BYPASS pin capacitor (0.1 µF for normal current limit / 1 µF for reduced current limit). LinkSwitch-TN2 selects between normal and reduced current limit at power-up prior to switching.

Auto-Restart

In the event of a fault condition such as output overload, output short, or an open-loop condition, LinkSwitch-TN2 enters into auto-restart operation. An internal counter clocked by the oscillator gets reset every time the FEEDBACK pin is pulled high. If the FEEDBACK pin is not pulled high for $t_{AR(ON)}$ (50 ms), the power MOSFET switching is disabled for a time equal to the auto-restart off-time. The first time a fault is asserted the off-time is 150 ms ($t_{AR(OFF)}$ first off period). If the fault condition persists, subsequent off-times are 1500 ms long ($t_{AR(OFF)}$ subsequent periods). The auto-restart alternately enables and disables the switching of the power MOSFET until the fault condition is removed. The auto-restart counter is gated by the switch oscillator.

Hysteretic Output Overvoltage Protection

The output overvoltage protection provided by the LinkSwitch-TN2 IC uses auto-restart that is triggered by a current >$I_{BP(SD)}$ into the BYPASS pin. In addition to an internal filter, the BYPASS pin capacitor forms an external filter providing noise immunity from inadvertent triggering. For the bypass capacitor to be effective as a high frequency filter, the capacitor should be located as close as possible to the SOURCE and BYPASS pins of the device.

The OVP function can be realized in a flyback converter by connecting a Zener diode from the output supply to the BYPASS pin. The circuit example shown in Figure 6 describes a simple method for implementing the output overvoltage protection. Adding additional filtering can be achieved by inserting a low value (10 Ω to 47 Ω) resistor in series with the OVP Zener diode. The resistor in series with the OVP Zener diode also limits the maximum current into the BYPASS pin. The current should be limited to less than 16 mA.

During a fault condition resulting from loss of feedback, the output voltage will rapidly rise above the nominal voltage. A voltage at the output that exceeds the sum of the voltage rating of the Zener diode connected from the output to the BYPASS pin and bypass voltage, will cause a current in excess of $I_{BP(SD)}$ injected into the BYPASS pin, which will trigger the auto-restart and protect the power supply from overvoltage.

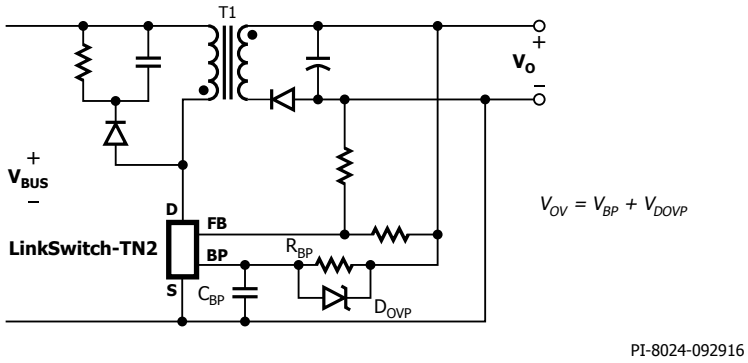

Figure 6. Non-Isolated Flyback Converter with Output Overvoltage Protection.

Applications Example

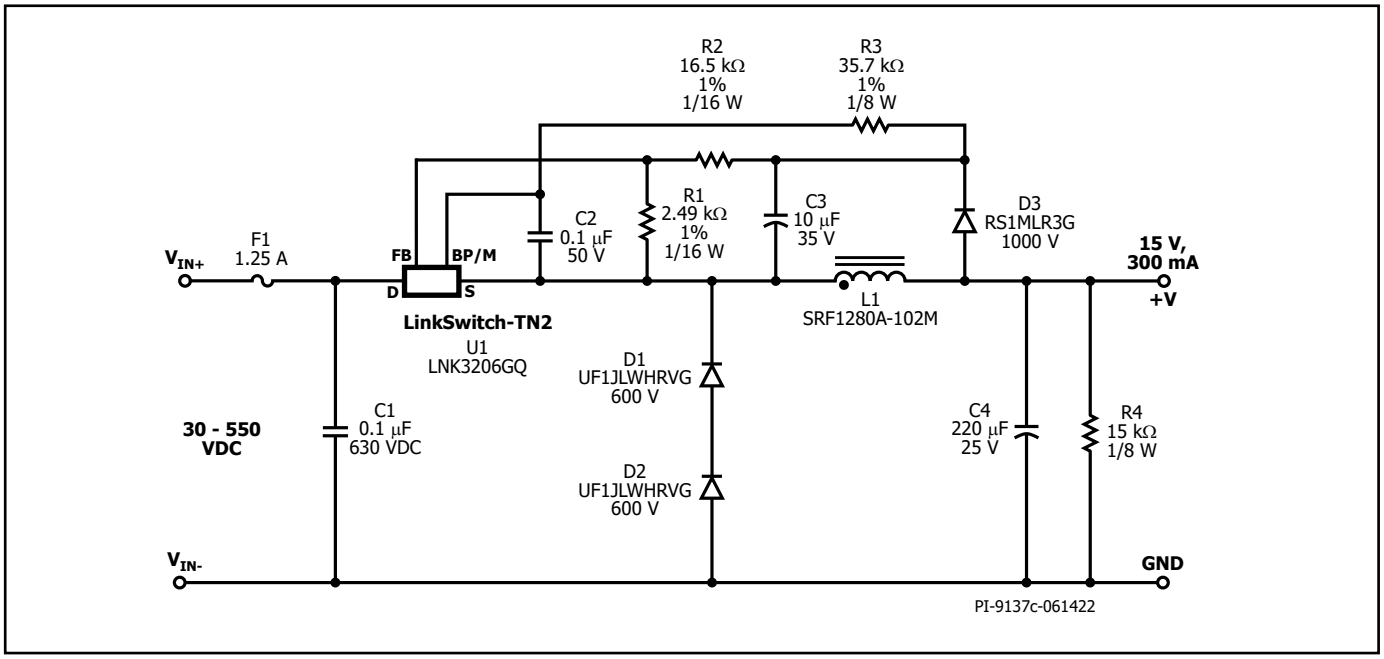

Figure 7. 30 VDC – 550 VDC, 15 V, 300 mA Constant Voltage Power Supply using LinkSwitch-TN2 Automotive.

30 VDC – 550 VDC Input 4.5 W Buck Converter

The circuit shown in Figure 7 is typical implementation of a 15 V, 300 mA non-isolated power supply used in automotive application. DC voltage from a battery source will be the input to the buck converter. The buck converter circuit was designed to meet AEC-Q100 Grade 3 temperature requirement of -40 °C to +85 °C.

The input stage comprises of fuse F1 and capacitor C1. In the event of fault condition, Fuse F1 will break open from the input supply for catastrophic event within the buck converter circuit. Capacitor C1 serves as a decoupling capacitor which helps to provide local instantaneous charge to the buck converter.

The LinkSwitch-TN2 automotive IC, freewheeling diode D1 and D2, output choke L1, and the output capacitor C4, forms the power processing stage. The power supply operates in mostly continuous-mode (MCM) due to the output load current requirement. Since application's maximum ambient temperature is 85 °C, diode D1 and D2 are ultrafast diode with a reverse recovery time (t_{RR}) of approximately 25 ns. Inductor L1 is a standard off-the-shelf inductor with appropriate RMS current rating (and acceptable temperature rise). Capacitor C4 is the output filter capacitor; its primary function is to filter the output voltage ripple. The output voltage ripple is a stronger function of the ESR of the output capacitor than the value of the capacitor itself. Optional resistor R3 supplies the BYPASS pin externally for significantly lower no-load input power and increased efficiency over all load conditions.

The voltage developed across C3 is sensed and regulated via the resistor divider R1 and R2 connected to U1's FEEDBACK pin. The values of R1 and R2 are selected such that, at the desired output voltage, the voltage at the FEEDBACK pin is 2.00 V.

Regulation is maintained by skipping switching cycles. As the output voltage rises, the current into the FEEDBACK pin will rise. If this exceed I_{FB} then subsequent cycle will be skipped until the current is reduces below I_{FB}. Thus, as the output load is reduced, more cycles will be skipped and if the load increases, fewer cycles are skipped. To provide overload protection if no cycles are skipped during 50 ms period, LinkSwitch-TN2 Automotive will enter auto-restart, limiting the average output power to approximately 3% of the maximum overload power. Due to tracking errors between the output voltage and the voltage across C3 at light load or no-load, a small pre-load may be required (R4). For the design in Figure 7, if regulation to zero load is required, then this value should be reduced to 5 kΩ.

Key Application Considerations LinkSwitch-TN2 Automotive Design Considerations

Data sheet maximum output current table (Table 1) represents the typical practical continuous output current continuous conduction mode (CCM) of operation that can be delivered from a given LinkSwitch-TN2 device under the following assumed conditions:

1. Buck converter topology.
2. The minimum DC input voltage is 30 V.
3. The maximum DC input voltage is 550 V.
4. Output voltage of 15 VDC.
5. Efficiency of 75%.
6. A catch/freewheeling diode with t_{RR} ≤35 ns is used for operation at 85 °C.
7. Maximum ambient temperature of 85 °C .
8. The part is board mounted with SOURCE pins soldered to a sufficient area of copper to keep the SOURCE pin temperature at or below 120 °C.

LinkSwitch-TN2 Selection and Selection Between MDCM and CCM Operation

Select the LinkSwitch-TN2 Automotive device, freewheeling diode and output inductor that gives the lowest overall cost. In general, MDCM provides the lowest cost and highest efficiency converter. CCM designs require a larger inductor. Regardless of CCM or MDCM operation, ultrafast (t_{RR} ≤35 ns) freewheeling diode should be used due to high ambient temperature operation. However, if the highest output current is required, CCM should be employed following the guidelines below.

Component Selection

Referring to Figure 7, the following considerations may be helpful in selecting components for a LinkSwitch-TN2 Automotive design. Selected component should be AEC compliant due to automotive application.

BYPASS Pin Capacitor C2

Capacitor connected from the BYPASS pin provides decoupling for the controller and also selects current limit. A 0.1 µF or 1 µF capacitor may be used as indicated in the data sheet. Though electrolytic capacitors can be used, often surface mount multi-layer ceramic capacitors are preferred for use as they enable placement of capacitors close to the IC and design of compact switching power supplies. Surface mount multi-layer ceramic capacitors X7R dielectric with 0805 package is recommended to ensure minimum capacitance change under DC bias and temperature.

Freewheeling Diode D1 and D2

Diode D1 and D2 should be an ultrafast type. Reverse recovery time t_{RR} ≤35 ns should be used since application's maximum ambient temperature is 85 °C. Higher t_{RR} is not acceptable due to t_{RR} increase with temperature, as continuous mode operation will always occur during start-up and normal operation causing high leading edge current spikes, terminating the switching cycle prematurely, and preventing the output from reaching regulation. High t_{RR} diodes should never be used as the large reverse recovery currents can cause excessive power dissipation in the diode and/or exceed the maximum drain current specification of LinkSwitch-TN2.

High-voltage with low t_{RR} diode are not common. To meet 80% diode voltage derating requirement, two freewheeling diode in series was implemented.

Feedback Diode D3

Diode D3 can be an ultrafast diode such as the RSxLH series. Ultrafast diode speed up the feedback capacitor charging at start-up which will improve the start-up response.

Inductor L1

Choose any standard off-the-shelf inductor that meets the design requirements. An AEC-Q200 SMD inductor, "drum" inductor, or "dog bone" "I" core inductor can be used. SMD inductor is recommended due to its small form factor ideal for automotive power supply.
To increase efficiency, select inductor with lowest DCR. The typical inductance value and RMS current rating can be obtained from the LinkSwitch-TN2 design spreadsheet available within the PI Expert design suite from Power Integrations. Choose L1 greater than or equal to the typical calculated inductance with RMS current rating greater than or equal to calculated RMS inductor current. Care should be taken to ensure that the inductor has sufficient voltage rating as this is a high-voltage application.

Capacitor C4

The primary function of capacitor C4 is to smooth the inductor current. The actual output ripple voltage is a function of this capacitor's ESR. To a first order, the ESR of this capacitor should not exceed the rated ripple voltage divided by the typical current limit of the chosen LinkSwitch-TN2. A conductive polymer type capacitor should be used due to the wide ambient temperature range of automotive applications.

Feedback Resistors R1 and R2

The values of the resistors in the resistor divider formed by R1 and R2 are selected to maintain 2.00 V at the FEEDBACK pin. It is recommended that R1 and R2 be chosen as a standard 1% resistor. It is recommend to pick 2.49 kΩ for R1. This ensures good noise immunity by biasing the feedback network with a current of approximately 0.8 mA.

External Bias Resistor R3

To reduce the no-load input power of the power supply, resistor R3, connected from the feedback capacitor C3 to the BYPASS pin, is recommended. This is applicable to the power supply whose output voltage is higher than $V_{BP(SHUNT)}$. To achieve lowest no-load power consumption, the current fed into the BYPASS pin should be slightly higher than 120 µA for LNK3206GQ and 150 µA for LNK3209GQ. For the best full load efficiency and thermal performance, the current fed into the BYPASS pin should be slightly higher than the current values stated below.

Part Number	Bypass Current
LNK3206GQ	290 µA
LNK3209GQ	530 µA

Feedback Capacitor C3

Capacitor C3 should be a conductive polymer type capacitor due to negative temperature operation of automotive applications. It provides a "sample and hold" function, charging to the output voltage during the off-time of LinkSwitch-TN2. Its value should be 10 µF to 22 µF; smaller values cause poorer regulation at light load conditions.

The LNK3209GQ IC has a current limit state machine. As the output is changed, the current limit also transition to a different state. In some cases, pulse grouping may occur if the current limit is stuck from going back and forth, one state change to another. This condition is more prone to happen at high-line input and with heavier or more CCM load. Adding a resistor to the feedback capacitor C3 helps to improve output ripple. The drawback with this circuit is slightly worse load regulation. Thus, choose a value between 4.7 Ω and 30 Ω to balance between regulation and output ripple.

Pre-Load Resistor R4

In high-side, direct feedback designs where the minimum load is <3 mA, a pre-load resistor is required to maintain output regulation.

This ensures sufficient inductor energy to pull the inductor side of the feedback capacitor C3 to input return via D3. Recommended values of R4 should be selected to provide a minimum output load of 3 mA. However, lower pre-load resistors increases no-load input power consumption and improves regulation at no-load. Higher pre-load resistors decreases no-load input power consumption and worsen regulation at no-load. Selection of pre-load resistor is a balance between no-load power consumption and no-load regulation.

Printed Circuit Board (PCB)

Printed Circuit Board (PCB) should be rigid enough to survive the harsh environment of automotive application. It is recommended to use FR-4 High Tg PCB material.

LinkSwitch-TN2 Layout Considerations

This application is requires to operate at 85 °C ambient temperature. To eliminate the use of metal heat sink, SOURCE pin copper area can be use as heat sink for the LinkSwitch-TN2 Automotive IC.

Figures 8 are printed circuit board layout design examples for the circuit schematic shown in Figure 7. The loop area 1 formed by LinkSwitch-TN2 (U1), free-wheeling diodes (D1, D2), and input bypass capacitor (C1) should be kept as small as possible. The loop area 2 formed by inductor (L1), output filter capacitor (C4) and free-wheeling diodes (D1, D2) should also be kept as small as possible. The BYPASS pin capacitor C2 should be located physically close to the BYPASS (BP) and SOURCE (S) pins. Effective decoupling capacitor C1 placement should be close to the DRAIN (D) pin. For a clean feedback signal, Feedback diode (D3) should be star connected to output cap (C4). Trace from output cap (C4) to Feedback diode (D3) should be space out properly away from switching nodes.

Quick Design Checklist

As with any power supply design, all LinkSwitch-TN2 automotive designs should be verified for proper functionality on the bench. The following minimum test are recommended.

1. Adequate DC rail voltage – Check that the minimum DC input voltage does not fall below 60 VDC at maximum load.
2. Correct diode selection – For designs operating in continuous conduction mode (CCM) and/ or higher ambients, then a diode with a reverse recovery time of 35 ns or better, such as the UF1xLW, is recommended.
3. Maximum drain current – Verify that the peak drain current is below the data sheet peak drain specification under worst-case conditions of highest line voltage, maximum overload (just prior to auto-restart) and highest ambient temperature.
4. Thermal check – At maximum output power, minimum and maximum input voltage and maximum ambient temperature, verify that the LinkSwitch-TN2 SOURCE pin temperature is 120 °C or below. This ensure adequate margin due to variation in $R_{DS(ON)}$ from part to part. A battery powered thermocouple meter is recommended to make measurements when the SOURCE pins are a switching node. Alternatively, the ambient temperature may be raised to indicate margin to thermal shutdown.

In a LinkSwitch-TN2 automotive design using a buck converter topology, the SOURCE pin is a switching node. Oscilloscope measurements should therefore be made with probe grounded to a DC voltage, such as primary return or DC input rail, and not to the SOURCE pins. The power supply input must always be supplied from an isolated source when doing measurements (e.g. via an isolation transformer).

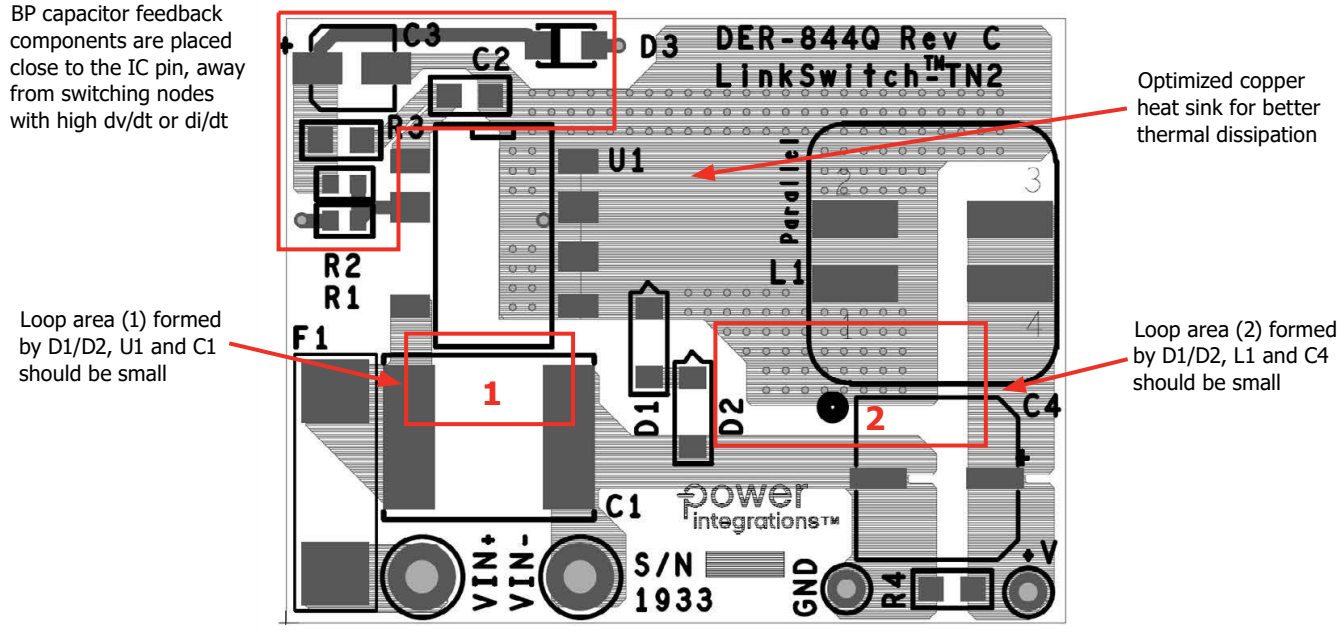

Special Notes

- All loops are separated; no loop is inside a loop. This will avoid ground impedance noise coupling.
- Keep trace surface area and length of high dv/dt nodes such as Drain or Source, as small and short as possible to minimize RFI generation.
- No (quiet) signal trace such feedback return should be routed near to or across noisy nodes (high dv/dt or di/dt) such as Drain or Source, underneath magnetics, switching-side of any winding or output rectifier diode. This avoids capacitive or magnetic noise coupling.
- No signal trace should share path with traces having an AC switching current such as the output capacitors. Connection must be star-connected to capacitor pad in order to avoid ground impedance coupled noise.

Figure 8. Recommended Printed Circuit Layout for LinkSwitch-TN2 Automotive using G Package.

Absolute Maximum Ratings(1,5)

DRAIN Pin Voltage .....-0.3 to 750 V
DRAIN Pin Peak Current[2]: LNK3206GQ .....3.75 A
LNK3209GQ .....10.2 A
FEEDBACK Pin Voltage..... -0.3 V to 7 V
FEEDBACK Pin Current.....100 mA
BYPASS Pin Voltage ..... -0.3 V to 7 V
Storage Temperature .....-65 °C to 150 °C
Operating Junction Temperature[3] .....-40 °C to 150 °C
Lead Temperature[4] .....260 °C

Notes:
1. All voltages referenced to SOURCE, T_A = 25 °C.
2. See Figure 14 for LNK3206GQ and Figure 15 for LNK3209GQ, for V_{DS} > 400 V.
3. Normally limited by internal circuitry.
4. 1/16 in. from case for 5 seconds.
5. Maximum ratings specified may be applied, one at a time, without causing permanent damage to the product. Exposure to Absolute Maximum Rating conditions for extended periods of time may affect product reliability.

Thermal Resistance

Thermal Resistance: G Package:
(θ_{JA}) ..... 70 °C/W[2]; 60 °C/W[3]
(θ_{JC})[1] .....11 °C/W

Notes:
1. Measured on pin 8 (SOURCE) close to plastic interface.
2. Soldered to 0.36 sq. in. (232 mm^2), 2 oz. (610 g/m^2) copper clad.
3. Soldered to 1 sq. in. (645 mm^2), 2 oz. (610 g/m^2) copper clad.

Parameter	Symbol	Conditions SOURCE = 0 V; T_J = -40 to 125 °C See Figure 9 (Unless Otherwise Specified)			Min	Typ	Max	Units
Control Functions								
Output Frequency	f_{OSC}	T_J = 25 °C	Average		62	66	70	kHz
			Average		58		74	
		T_J = 25 °C	Peak-Peak Jitter			4		
Maximum Duty Cycle	DC_{MAX}	S2 Open			65	70	75	%
FEEDBACK Pin Turnoff Threshold Current	I_{FB}	V_{BP} = 5.0 V to 5.5 V	T_J = 25 °C		44.5	49	54.5	µA
					42		56	
FEEDBACK Pin Voltage at Turnoff Threshold	V_{FB}	V_{BP} = 5.0 V to 5.5 V	T_J = 25 °C		1.97	2.00	2.05	V
					1.95		2.05	
FEEDBACK Pin Instant Shutdown Current	$I_{FB(SD)}$	T_J = 25 °C			520	675	800	µA
					500		820	
FEEDBACK Pin Instant Shutdown Delay		T_J = 25 °C See Note E				2		Switch Cycles
FEEDBACK Pin Voltage at Shutdown Current	$V_{FB(SD)}$	V_{BP} = 5.0 V to 5.5 V	T_J = 25 °C		2.7	3.0	3.65	V
					2.4		3.75	
DRAIN Pin Supply Current	I_{S1}	V_{FB} = 2.1 V (MOSFET Not Switching) See Note A		LNK3206GQ	42	75	112	µA
				LNK3209GQ	53	95	143	
	I_{S2}	FEEDBACK Open (MOSFET Switching) See Notes A, B		LNK3206GQ	120	165	250	µA
				LNK3209GQ	210	300	460	

Parameter	Symbol	Conditions SOURCE = 0 V; T_J = -40 to 125 °C See Figure 9 (Unless Otherwise Specified)		Min	Typ	Max	Units
Control Functions (cont.)							
BYPASS Pin Charge Current	I_{CH1}	V_{BP} = 0 V	T_J = 25 °C	-11	-7	-3	mA
				-13		-1	
	I_{CH2}	V_{BP} = 4 V	T_J = 25 °C	-7.5	-5	-2.5	
				-8.5		-1.5	
BYPASS Pin Voltage	V_{BP}			4.75	5.0	5.25	V
BYPASS Pin Shutdown Threshold Current	$I_{BP(SD)}$			3	5.5	8	mA
BYPASS Pin Shunt Voltage	$V_{BP(SHUNT)}$	I_{BP} = 2 mA		5	5.25	5.50	V
BYPASS Pin Voltage Hysteresis	$V_{BP(H)}$			0.34	0.47	0.6	V
BYPASS Pin Supply Current	$I_{BP(SC)}$	See Note C		55			µA
Circuit Protection							
Standard Current Limit (C_{BP} = 0.1 µF, See Note D, H)	I_{LIMIT}	di/dt = 95 mA/µs T_J = 25 °C	LNK3206GQ	450	482	515	mA
		di/dt = 95 mA/µs		405		540	
		di/dt = 610 mA/µs T_J = 25 °C		510	580	650	
		di/dt = 610 mA/µs		485		680	
		di/dt = 165 mA/µs T_J = 25 °C	LNK3209GQ	1200	1300	1400	
		di/dt = 165 mA/µs		1079		1521	
		di/dt = 1000 mA/µs T_J = 25 °C		1413	1600	1787	
		di/dt = 1000 mA/µs		1328		1872	
Reduced Current Limit (C_{BP} = 1 µF, See Note D, H)	$I_{LIMIT(RED)}$	di/dt = 95 mA/µs T_J = 25 °C	LNK3206GQ	325	370	415	mA
		di/dt = 95 mA/µs		305		435	
		di/dt = 610 mA/µs T_J = 25 °C		408	464	520	
		di/dt = 610 mA/µs		388		540	
		di/dt = 165 mA/µs T_J = 25 °C	LNK3209GQ	925	1050	1175	
		di/dt = 165 mA/µs		866		1234	
		di/dt = 1000 mA/µs T_J = 25 °C		1194	1350	1506	
		di/dt = 1000 mA/µs		1120		1580	

Parameter	Symbol	Conditions SOURCE = 0 V; T_J = -40 to 125 °C See Figure 9 (Unless Otherwise Specified)			Min	Typ	Max	Units
Circuit Protection (cont.)								
Minimum On-Time	$t_{ON(MIN)}$	See Note I			380	580	780	ns
Leading Edge Blanking Time	t_{LEB}	T_J = 25 °C			300	450		ns
Thermal Shutdown Temperature	T_{SD}	See Note F			135	142	150	°C
Thermal Shutdown Hysteresis	$T_{SD(H)}$	See Note F				30		°C
Internal Soft-Start	$f_{OSC(SS)}$	LNK3206GQ	Soft-Start Period, See Note E			256		Cycles
			Soft-Start Frequency			33		kHz
		LNK3209GQ	Soft-Start Period 1			64		Cycles
			Soft-Start Frequency 1			16.5		kHz
			Soft-Start Period 2			64		Cycles
			Soft-Start Frequency 2			22		kHz
			Soft-Start Period 3			128		Cycles
			Soft-Start Frequency 3			33		kHz
Output								
ON-State Resistance	$R_{DS(ON)}$	LNK3206GQ	I_D = 45 mA	T_J = 25 °C		7	8.1	Ω
				T_J = 125 °C		13	15.5	
		LNK3209GQ	I_D = 45 mA	T_J = 25 °C		2.7	3.2	
				T_J = 125 °C		3.8	4.37	
OFF-State Drain Leakage Current	I_{DSS1}	V_{BP} = 5.4 V V_{FB} ≥2.1 V V_{DS} = 80% BV_{DSS} T_J = 125 °C					200	µA
	I_{DSS2}	V_{BPP} = 5.4 V V_{DSS} = 325 V T_J = 25 °C				15		
Breakdown Voltage	BV_{DSS}	V_{BP} = 5.4 V V_{FB} ≥2.1 V T_J = 25 °C			750			V
DRAIN Pin Supply Voltage		T_J = 25 °C			25			V
Auto-Restart ON-Time	$t_{AR(ON)}$	T_J = 25 °C See Note E, G				50		ms
Auto-Restart OFF-Time	$t_{AR(OFF)}$	T_J = 25 °C See Note E, G	First Off Period			150		ms
			Subsequent Periods			1500		
Auto-Restart Duty Cycle	DC_{AR}	Subsequent Periods See Note E				3		%

NOTES:

A. Total current consumption is the sum of I_{S1} and I_{DSS} when FEEDBACK pin voltage is = 2.1 V (MOSFET not switching) and the sum of I_{S2} and I_{DSS} when FEEDBACK pin is shorted to SOURCE (MOSFET switching).

B. Since the output MOSFET is switching, it is difficult to isolate the switching current from the supply current at the DRAIN. An alternative is to measure the BYPASS pin current at 5.1 V.

C. This current is only intended to supply an optional optocoupler connected between the BYPASS and FEEDBACK pins and not any other external circuitry.

D. For current limit at other di/dt values, refer to Figures 21 and 22.

E. This parameter is guaranteed by design.

F. This parameter is derived from characterization.

G. Auto-restart on time has the same temperature characteristics as the oscillator (inversely proportional to frequency).

H. The BP/M capacitor value tolerance should be equal or better than indicated below across the ambient temperature range of the target application.

I. Measured using circuit in Figure 11 with 50 Ω drain pull-up. The width of the drain pulse is measured as the time from V_{FALL} = 42 V to V_{RISE} = 40 V (VDR = 50 V).

Nominal BP/M Pin Capacitor Value	**Tolerance Relative to Minimal Capacitor Value**	
	Min	Max
0.1 µF	-60%	+100%
1 µF	-50%	+100%

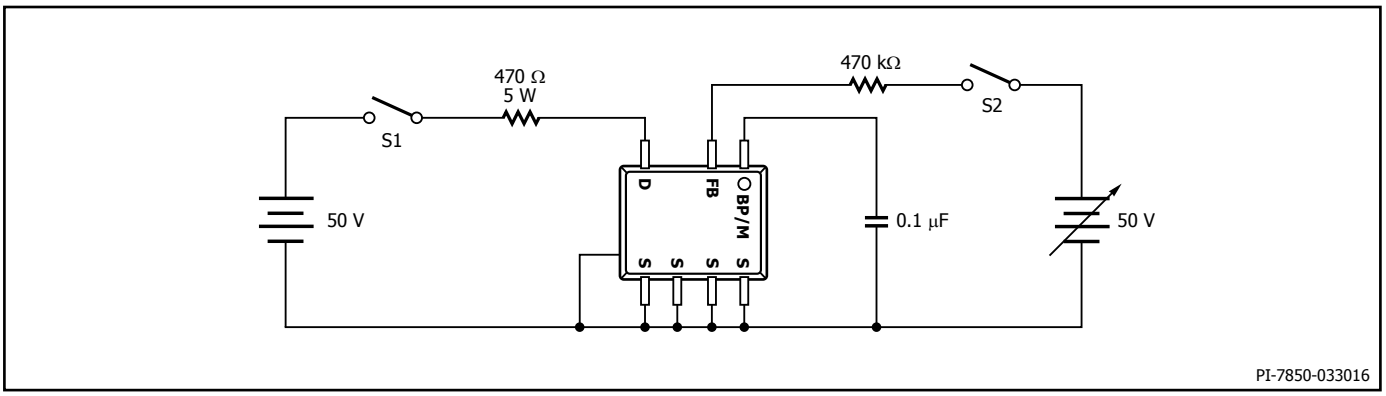

Figure 9. LinkSwitch-TN2 General Test Circuit.

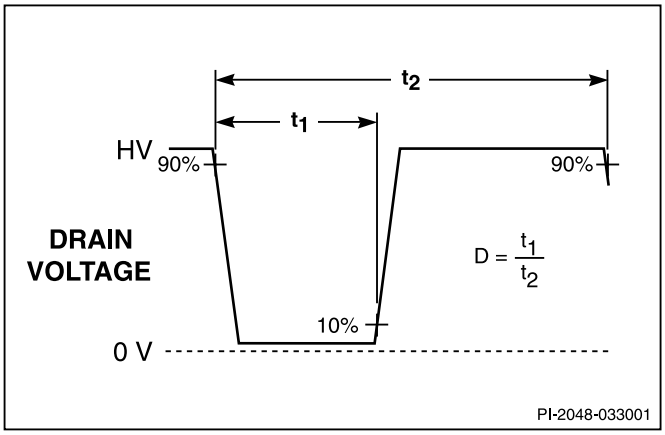

Figure 10. LinkSwitch-TN2 Duty Cycle Measurement.

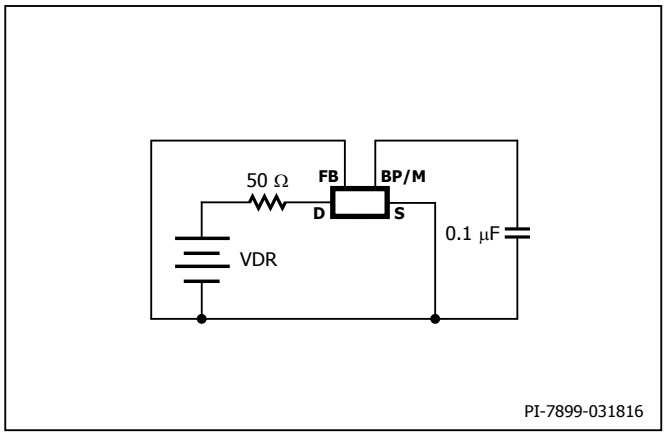

Figure 11. LinkSwitch-TN2 Minimum On-Time Test Circuit.

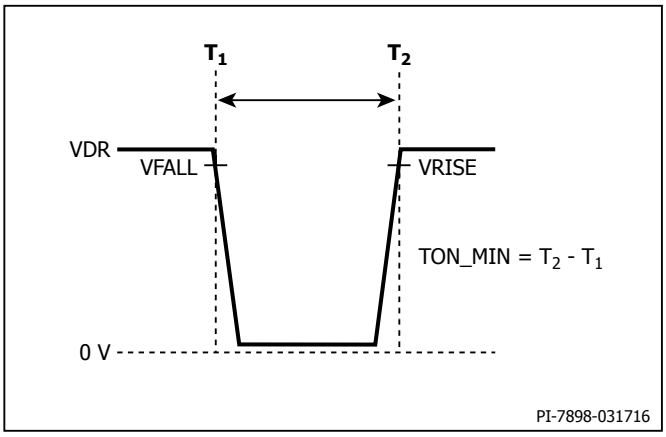

Figure 12. LinkSwitch-TN2 Minimum On-Time Measurement.

Typical Performance Characteristics

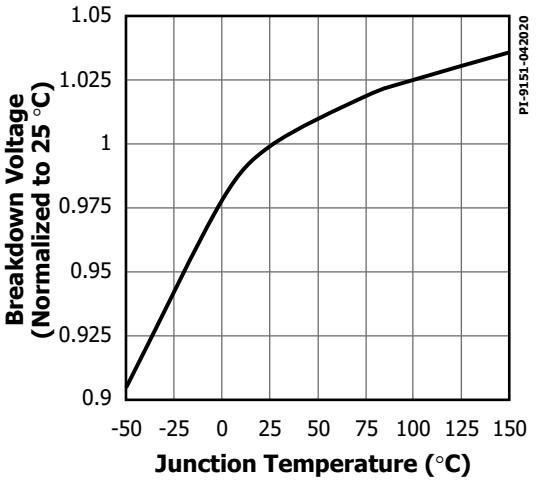

Figure 13. Breakdown vs. Temperature.

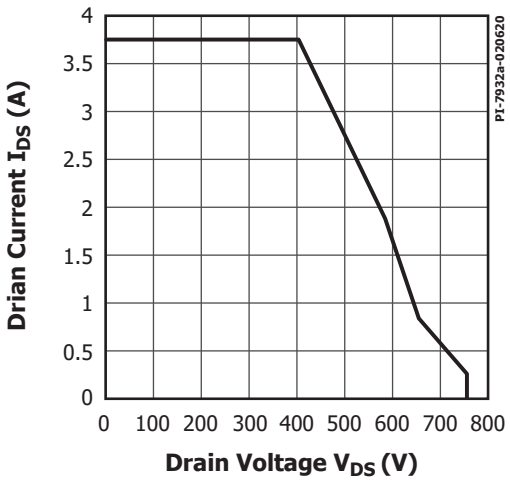

Figure 14. Maximum Allowable Drain Current vs. Drain Voltage for LN3206GQ.

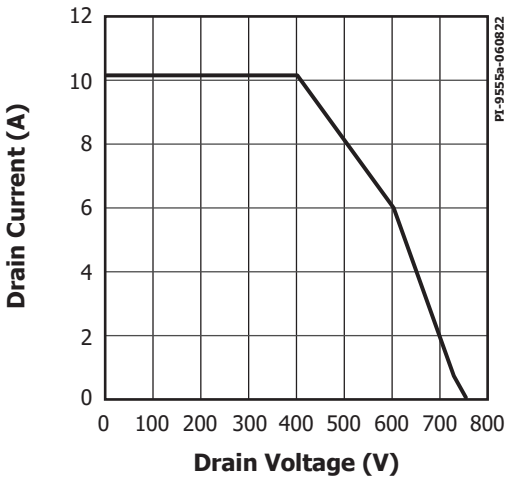

Figure 15. Maximum Allowable Drain Current vs. Drain Voltage for LNK3209GQ.

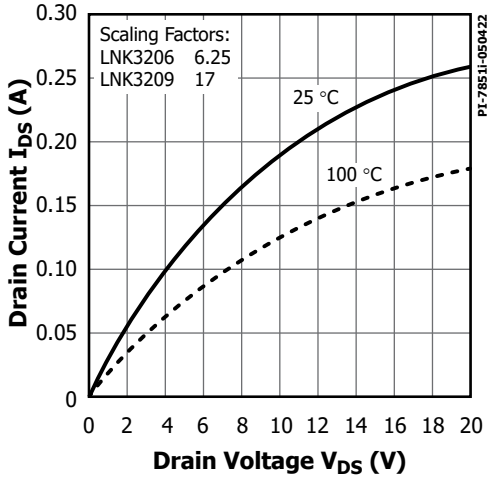

Figure 16. Output Characteristics.

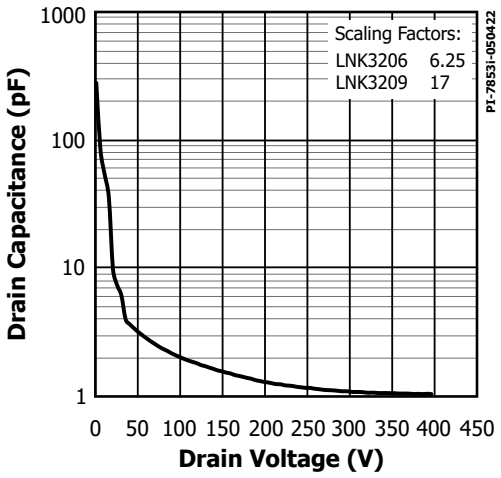

Figure 17. C_{OSS} vs. Drain Voltage.

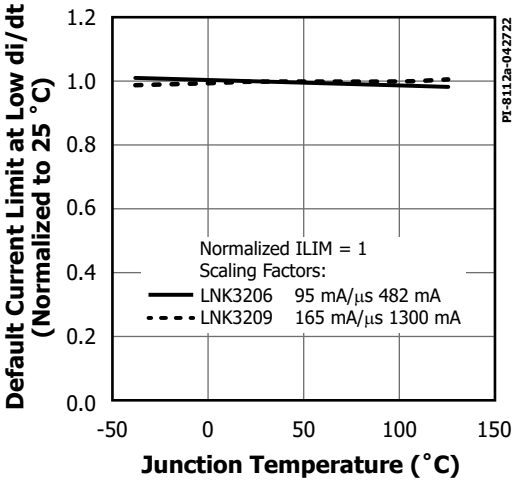

Figure 18. Current Limit vs. Temperature.

Typical Performance Characteristics

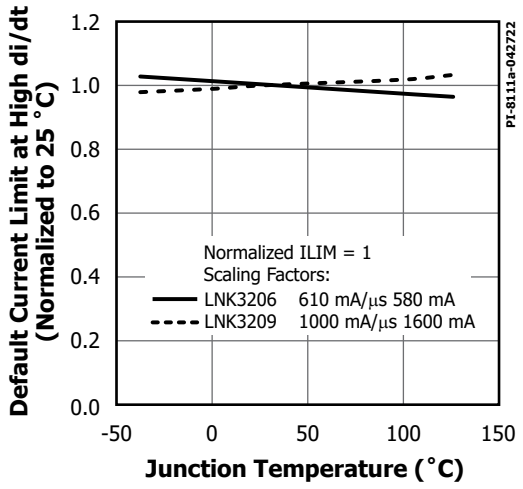

Figure 19. Current Limit vs. Temperature.

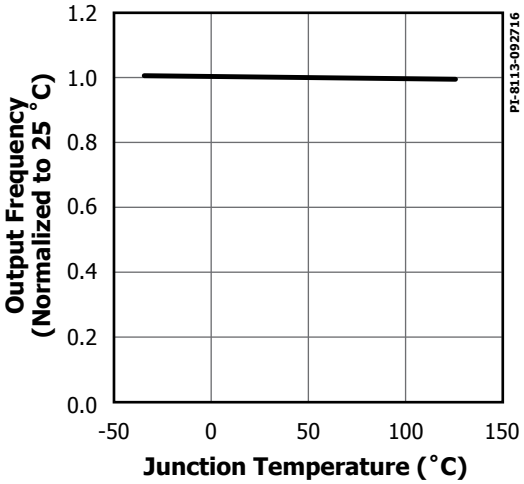

Figure 20. Output Frequency vs. Junction Temperature.

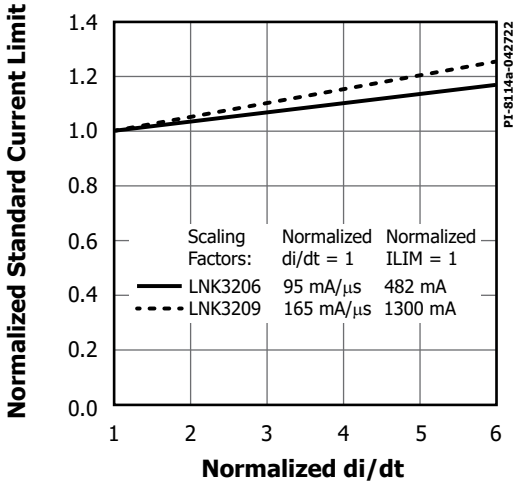

Figure 21. Standard Current Limit vs. di/dt.

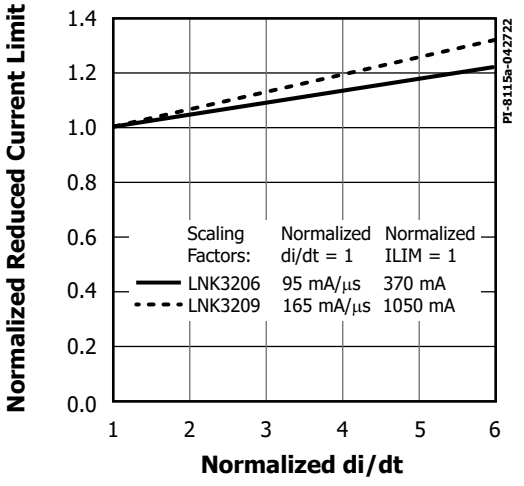

Figure 22. Reduced Current Limit vs. di/dt.

SMD-8C (G Package)

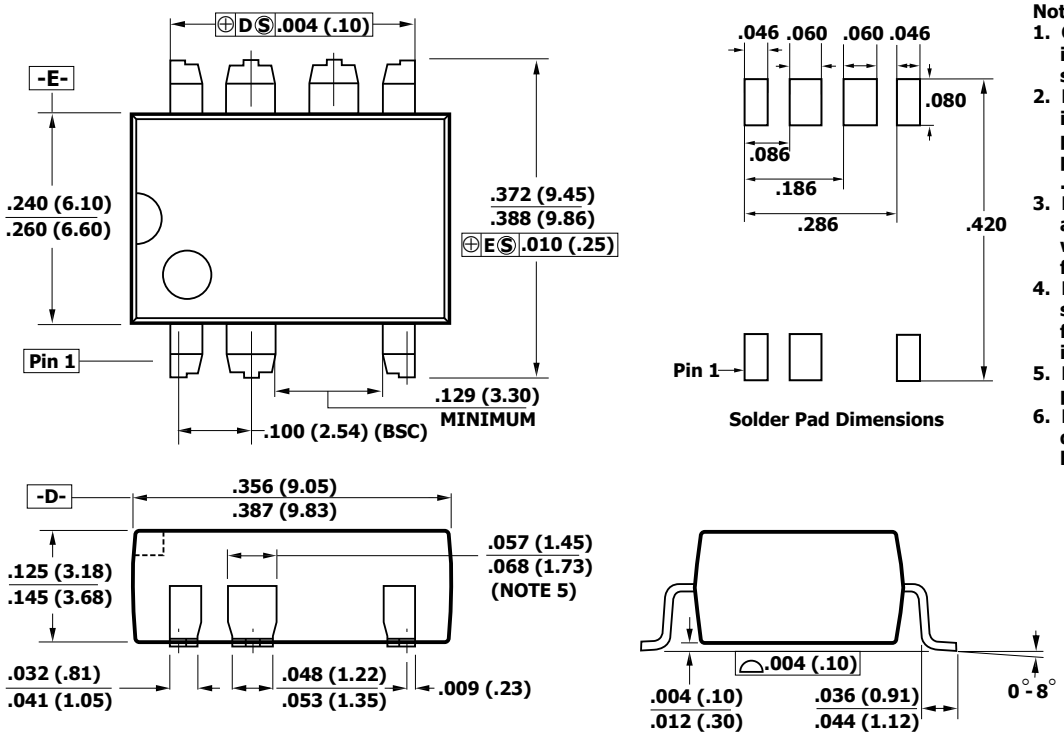

Notes:

1. Controlling dimensions are inches. Millimeter sizes are shown in parentheses.
2. Dimensions shown do not include mold flash or other protrusions. Mold flash or protrusions shall not exceed .006 (.15) on any side.
3. Pin locations start with Pin 1, and continue counter-clockwise to Pin 8 when viewed from the top. Pin 3 is omitted.
4. Minimum metal to metal spacing at the package body for the omitted lead location is .129 inch (3.30 mm).
5. Lead width measured at package body.
6. D and E are referenced datums on the package body.

G08C

PI-9070-041620

SMD-8C (G) PACKAGE MARKING

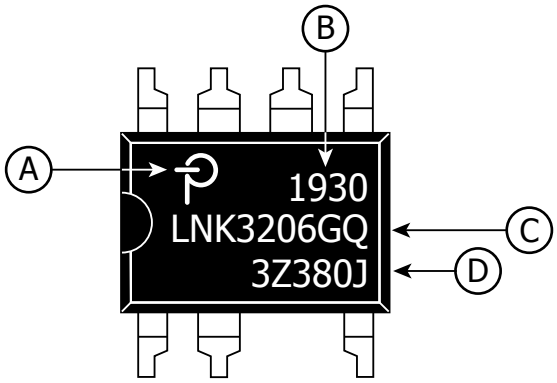

A. Power Integrations Registered Trademark
B. Assembly Date Code (last two digits of year followed by 2-digit work week)
C. Product Identification (Part #/Package Type)
D. Lot Identification Code

PI-8117a-102919

MSL Table

Part Number	MSL Rating
LNK3206GQ	3
LNK3209GQ	3

ESD and Latch-Up

Test	Conditions	Results
Latch-up at 125 °C	EIA/JESD78	> ±100 mA or > 1.5 × V_{MAX} on all pins
Human Body Model ESD	EIA/JESD22-A114-A	> ±2 kV on all pins
Machine Model ESD	EIA/JESD22-A115-A	> ±200 V on all pins

Part Ordering Information

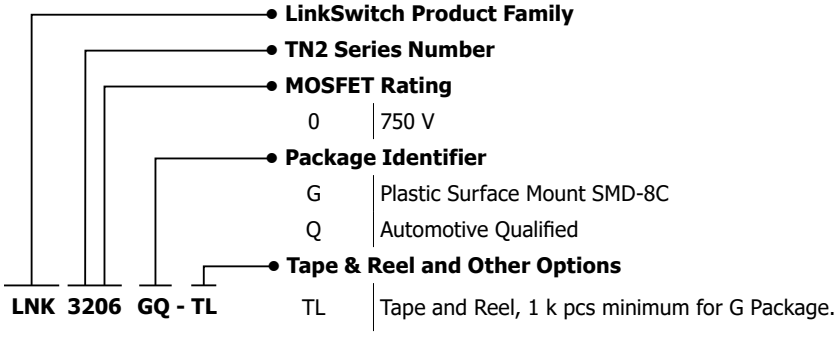

Revision	Notes	Date
D	Production release.	06/22

For the latest updates, visit our website: www.power.com
Power Integrations reserves the right to make changes to its products at any time to improve reliability or manufacturability. Power Integrations does not assume any liability arising from the use of any device or circuit described herein. POWER INTEGRATIONS MAKES NO WARRANTY HEREIN AND SPECIFICALLY DISCLAIMS ALL WARRANTIES INCLUDING, WITHOUT LIMITATION, THE IMPLIED WARRANTIES OF MERCHANTABILITY, FITNESS FOR A PARTICULAR PURPOSE, AND NON-INFRINGEMENT OF THIRD PARTY RIGHTS.

Patent Information
The products and applications illustrated herein (including transformer construction and circuits external to the products) may be covered by one or more U.S. and foreign patents, or potentially by pending U.S. and foreign patent applications assigned to Power Integrations. A complete list of Power Integrations' patents may be found at www.power.com. Power Integrations grants its customers a license under certain patent rights as set forth at https://www.power.com/company/intellectual-property-licensing/.

Life Support Policy
POWER INTEGRATIONS PRODUCTS ARE NOT AUTHORIZED FOR USE AS CRITICAL COMPONENTS IN LIFE SUPPORT DEVICES OR SYSTEMS WITHOUT THE EXPRESS WRITTEN APPROVAL OF THE PRESIDENT OF POWER INTEGRATIONS. As used herein:

1. A Life support device or system is one which, (i) is intended for surgical implant into the body, or (ii) supports or sustains life, and (iii) whose failure to perform, when properly used in accordance with instructions for use, can be reasonably expected to result in significant injury or death to the user.

2. A critical component is any component of a life support device or system whose failure to perform can be reasonably expected to cause the failure of the life support device or system, or to affect its safety or effectiveness.

Power Integrations, the Power Integrations logo, CAPZero, ChiPhy, CHY, DPA-Switch, EcoSmart, E-Shield, eSIP, eSOP, HiperLCS, HiperPLC, HiperPFS, HiperTFS, InnoSwitch, Innovation in Power Conversion, InSOP, LinkSwitch, LinkZero, LYTSwitch, SENZero, TinySwitch, TOPSwitch, PI, PI Expert, PowiGaN, SCALE, SCALE-1, SCALE-2, SCALE-3 and SCALE-iDriver, are trademarks of Power Integrations, Inc. Other trademarks are property of their respective companies. ©2022, Power Integrations, Inc.

Power Integrations Worldwide Sales Support Locations

World Headquarters
5245 Hellyer Avenue
San Jose, CA 95138, USA
Main: +1-408-414-9200
Customer Service:
Worldwide: +1-65-635-64480
Americas: +1-408-414-9621
e-mail: usasales@power.com

China (Shanghai)
Rm 2410, Charity Plaza, No. 88
North Caoxi Road
Shanghai, PRC 200030
Phone: +86-21-6354-6323
e-mail: chinasales@power.com

China (Shenzhen)
17/F, Hivac Building, No. 2, Keji Nan
8th Road, Nanshan District,
Shenzhen, China, 518057
Phone: +86-755-8672-8689
e-mail: chinasales@power.com

Germany
(AC-DC/LED/Motor Control Sales)
Einsteinring 24
85609 Dornach/Aschheim
Germany
Tel: +49-89-5527-39100
e-mail: eurosales@power.com

Germany (Gate Driver Sales)
HellwegForum 3
59469 Ense
Germany
Tel: +49-2938-64-39990
e-mail: igbt-driver.sales@power.com

India
#1, 14th Main Road
Vasanthanagar
Bangalore-560052 India
Phone: +91-80-4113-8020
e-mail: indiasales@power.com

Italy
Via Milanese 20, 3rd. Fl.
20099 Sesto San Giovanni (MI) Italy
Phone: +39-024-550-8701
e-mail: eurosales@power.com

Japan
Yusen Shin-Yokohama 1-chome Bldg.
1-7-9, Shin-Yokohama, Kohoku-ku
Yokohama-shi,
Kanagawa 222-0033 Japan
Phone: +81-45-471-1021
e-mail: japansales@power.com

Korea
RM 602, 6FL
Korea City Air Terminal B/D, 159-6
Samsung-Dong, Kangnam-Gu,
Seoul, 135-728, Korea
Phone: +82-2-2016-6610
e-mail: koreasales@power.com

Singapore
51 Newton Road
#19-01/05 Goldhill Plaza
Singapore, 308900
Phone: +65-6358-2160
e-mail: singaporesales@power.com

Taiwan
5F, No. 318, Nei Hu Rd., Sec. 1
Nei Hu Dist.
Taipei 11493, Taiwan R.O.C.
Phone: +886-2-2659-4570
e-mail: taiwansales@power.com

UK
Building 5, Suite 21
The Westbrook Centre
Milton Road
Cambridge
CB4 1YG
Phone: +44 (0) 7823-557484
e-mail: eurosales@power.com

ENTEGRECİ

Bu belge www.entegreci.com üzerinden sunulmaktadır.

Elektronik komponent tedarikinde Entegreci

Entegreci, Eskişehir merkezli, Türkiye geneline satış yapan bir elektronik komponent mağazasıdır. Entegreler (IC), mikrodenetleyiciler, transistörler, diyotlar, pasif elemanlar, konnektörler, modüller ve geliştirme kartları tek adetten seri üretim adetlerine kadar satılır. Ürün sayfalarında güncel stok durumunu, fiyatı ve datasheet bağlantısını bulabilirsiniz.

Parça koduyla arama

Üretici parça numarasını yazın; stok ve fiyatı hemen görün.

www.entegreci.com

Ürün kategorileri

Entegreden kapasitöre tüm elektronik komponent kategorileri.

Kategorilere göz atın

Üreticiler

Aradığınız üreticinin ürünlerini tek sayfada inceleyin.

Üreticileri görün

Toplu alım ve teklif

Listede olmayan ya da yüksek adetli parçalar için teklif isteyin.

Teklif isteyin

www.entegreci.com | **destek@entegreci.com** | **0850 305 90 34**

Entegreci is an online electronic components store based in Türkiye. Search by manufacturer part number to see stock, prices and datasheets for integrated circuits, microcontrollers, transistors, passive components and connectors, or request a quote for parts that are not listed.

Bu sayfa Entegreci tarafından eklenmiştir. Belgenin önceki sayfaları asıl yayıncısına aittir ve içeriği değiştirilmemiştir; en güncel sürüm için belgenin yayıncısına başvurun.