LNK603-606/613-616
LinkSwitch-II Family

Energy-Efficient, Accurate CV/CC Switcher for Adapters and Chargers

Product Highlights

Dramatically Simplifies CV/CC Converters
- Eliminates optocoupler and all secondary CV/CC control circuitry
- Eliminates all control loop compensation circuitry

Advanced Performance Features
- Compensates for transformer inductance tolerances
- Compensates for input line voltage variations
- Compensates for cable voltage drop (LNK61X series)
- Compensates for external component temperature variations
- Very tight IC parameter tolerances using proprietary trimming technology
- Frequency jittering greatly reduces EMI filter cost
- Even tighter output tolerances achievable with external resistor selection/trimming
- Programmable switching frequency up to 85 kHz to reduce transformer size

Advanced Protection/Safety Features
- Auto-restart protection reduces power delivered by >95% for output short-circuit and control loop faults (open and shorted components)
- Hysteretic thermal shutdown – automatic recovery reduces power supply returns from the field
- Meets high-voltage creepage requirements between DRAIN and all other pins both on the PCB and at the package

EcoSmart™– Energy Efficient
- Easily meets all global energy efficiency regulations
- No-load consumption below 30 mW at 230 VAC with optional external bias winding
- ON/OFF control provides constant efficiency down to very light loads – ideal for CEC and ENERGY STAR 2.0 regulations
- No current sense resistors – maximizes efficiency

Green Package
- Halogen free and RoHS compliant package

Applications
- Chargers for cell/cordless phones, PDAs, MP3/portable audio devices, adapters, LED drivers, etc.

Description

The LinkSwitch™-II dramatically simplifies low power CV/CC charger designs by eliminating an optocoupler and secondary control circuitry. The device introduces a revolutionary control technique to provide very tight output voltage and current regulation, compensating for transformer and internal parameter tolerances along with input voltage variations.

The device incorporates a 700 V power MOSFET, a novel ON/OFF control state machine, a high-voltage switched current source for self biasing, frequency jittering, cycle-by-cycle current limit and hysteretic thermal shutdown circuitry onto a monolithic IC.

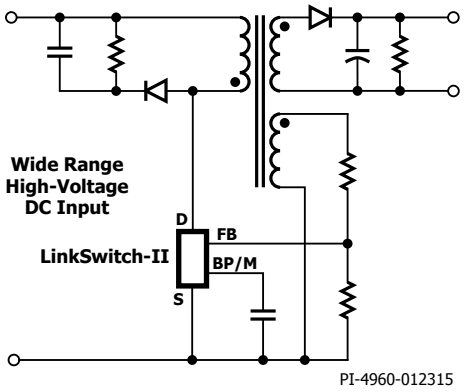

(a) Typical Application Schematic

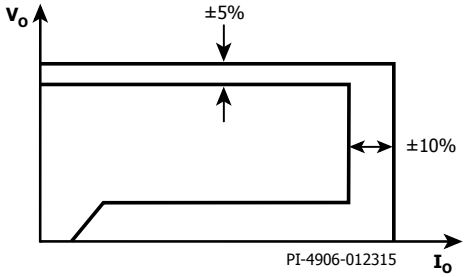

(b) Output Characteristic

Figure 1. Typical Application/Performance – Not a Simplified Circuit (a) and Output Characteristic Envelope (b). (see Application Section for more information).

Output Power Table

Product[3]	85-265 VAC	
	Adapter[1]	Open Frame[2]
LNK603/613PG/DG	2.5 W	3.3 W
LNK604/614PG/DG	3.5 W	4.1 W
LNK605/615PG/DG	4.5 W	5.1 W
LNK606/616PG/GG/DG	5.5 W	6.1 W

Table 1. Output Power Table.

Notes:
1. Minimum continuous power in a typical non-ventilated enclosed adapter measured at +50 °C ambient, device, T_J <100 °C.
2. Maximum practical continuous power in an open frame design with adequate heat sinking, measured at 50 °C ambient (see Key Applications Considerations section for more information).
3. Packages: P: DIP-8C, G: SMD-8C, D: SO-8C.



DIP-8C (P Package) SMD-8C (G Package) SO-8C (D Package).

Figure 2. Package Options.

This Product is Covered by Patents and/or Pending Patent Applications.

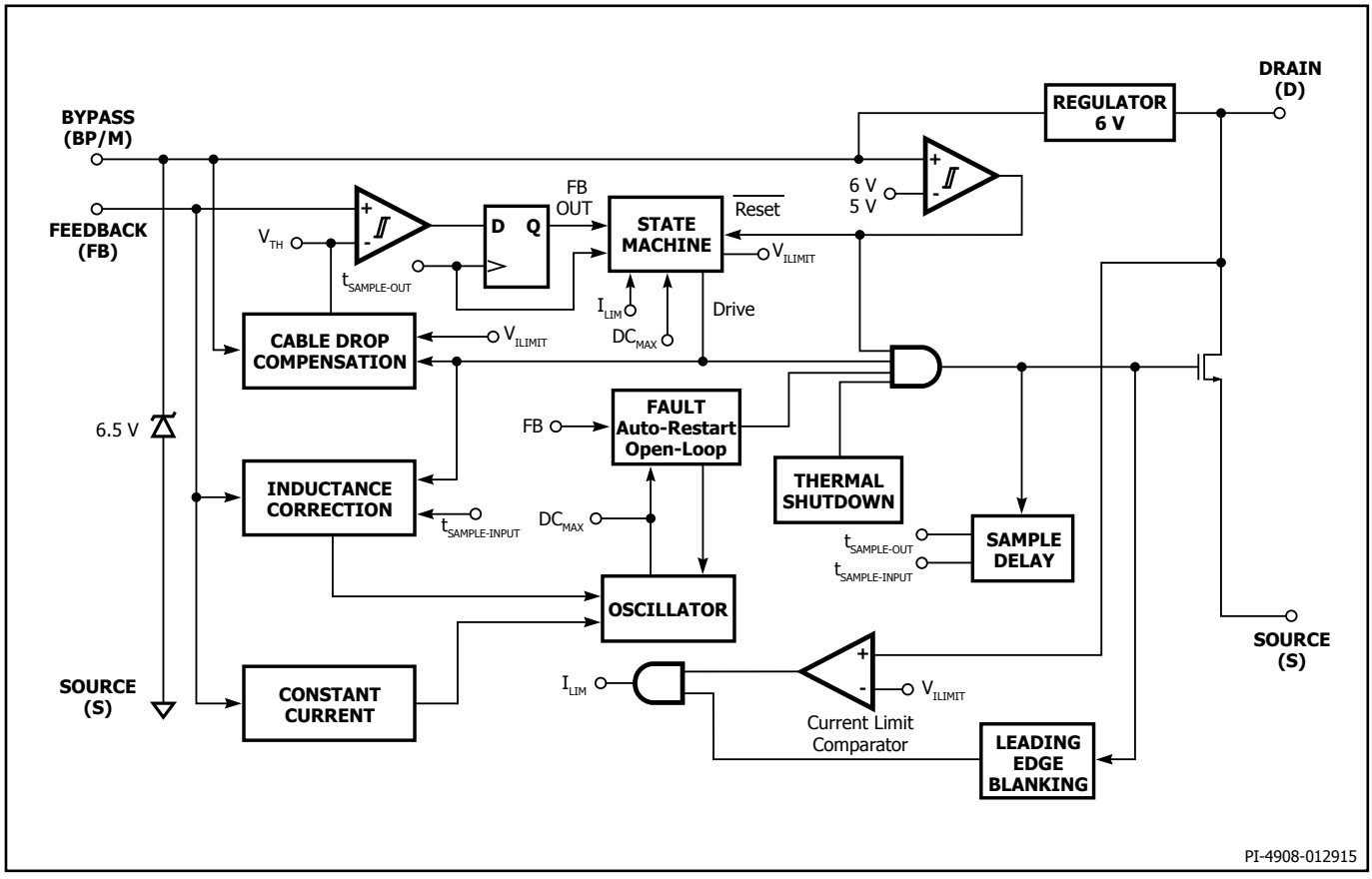

Figure 3. Functional Block Diagram.

Pin Functional Description

DRAIN (D) Pin:
This pin is the power MOSFET drain connection. It provides internal operating current for both start-up and steady-state operation.

BYPASS/MULTI-FUNCTIONAL PROGRAMMABLE (BP/M) Pin:
This pin has multiple functions:

1. It is the connection point for an external bypass capacitor for the internally generated 6 V supply.
2. It is a mode selection for the cable drop compensation for LNK61X series.

FEEDBACK (FB) Pin:
During normal operation, switching of the power MOSFET is controlled by this pin. This pin senses the AC voltage on the bias winding. This control input regulates both the output voltage in CV mode and output current in CC mode based on the flyback voltage of the bias winding. The internal inductance correction circuit uses the forward voltage on the bias winding to sense the bulk capacitor voltage.

SOURCE (S) Pin:
This pin is internally connected to the output MOSFET source for high-voltage power and control circuit common returns.

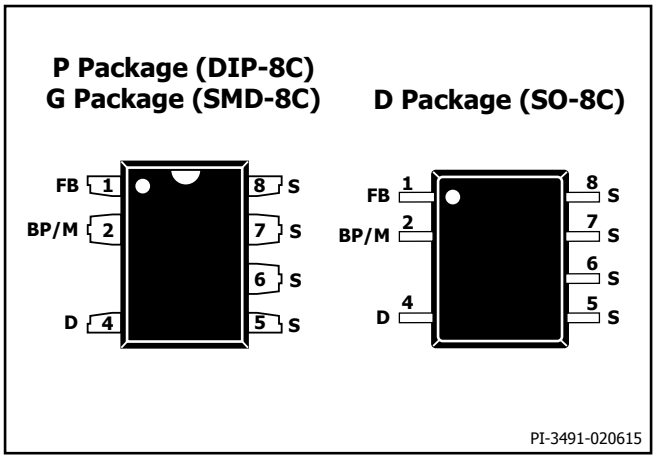

Figure 4. Pin Configuration.

LinkSwitch-II Functional Description

The LinkSwitch-II combines a high-voltage power MOSFET switch with a power supply controller in one device. Similar to the LinkSwitch-LP and TinySwitch-III it uses ON/OFF control to regulate the output voltage. In addition, the switching frequency is modulated to regulate the output current to provide a constant current characteristic. The LinkSwitch-II controller consists of an oscillator, feedback (sense and logic) circuit, 6 V regulator, over-temperature protection, frequency jittering, current limit circuit, leading-edge blanking, inductance correction circuitry, frequency control for constant current regulation and ON/OFF state machine for CV control.

Inductance Correction Circuitry
If the primary magnetizing inductance is either too high or low the converter will automatically compensate for this by adjusting the oscillator frequency. Since this controller is designed to operate in discontinuous-conduction mode the output power is directly proportional to the set primary inductance and its tolerance can be completely compensated with adjustments to the switching frequency.

Constant Current (CC) Operation
As the output voltage and therefore the flyback voltage across the bias winding increases, the FEEDBACK pin voltage increases. The switching frequency is adjusted as the FEEDBACK pin voltage increases to provide a constant output current regulation. The constant current circuit and the inductance correction circuit are designed to operate concurrently in the CC region.

Constant Voltage (CV) Operation
As the FEEDBACK pin approaches V_{FBth} from the constant current regulation mode, the power supply transitions into CV operation. The switching frequency at this point is at its maximum value, corresponding to the peak power point of the CC/CV characteristic. The controller regulates the FEEDBACK pin voltage to remain at V_{FBth} using an ON/OFF state-machine. The FEEDBACK pin voltage is sampled 2.5 μs after the turn-off of the high-voltage switch. At light loads the current limit is also reduced to decrease the transformer flux density.

Output Cable Compensation
This compensation provides a constant output voltage at the end of the cable over the entire load range in CV mode. As the converter load increases from no-load to the peak power point (transition point between CV and CC) the voltage drop introduced across the output cable is compensated by increasing the FEEDBACK pin reference voltage. The controller determines the output load and therefore the correct degree of compensation based on the output of the state machine. Cable drop compensation for a 24 AWG (0.3 Ω) cable is selected with C_{BP} = 1 μF and for a 26 AWG (0.49 Ω) cable with C_{PB} = 10 μF.

Auto-Restart and Open-Loop Protection
In the event of a fault condition such as an output short or an open loop condition the LinkSwitch-II enters into an appropriate protection mode as described below.

In the event the FEEDBACK pin voltage during the flyback period falls below 0.7 V before the FEEDBACK pin sampling delay (~2.5 μs) for a duration in excess of ~450 ms (auto-restart on-time (t_{AR-ON}) the converter enters into auto-restart, wherein the power MOSFET is disabled for 2 seconds (~18% auto-restart duty cycle). The auto-restart alternately enables and disables the switching of the power MOSFET until the fault condition is removed.

In addition to the conditions for auto-restart described above, if the sensed FEEDBACK pin current during the forward period of the conduction cycle (switch "on" time) falls below 120 μA, the converter annunciates this as an open-loop condition (top resistor in potential divider is open or missing) and reduces the auto-restart time from 450 ms to approximately 6 clock cycles (90 μs), whilst keeping the disable period of 2 seconds.

Over-Temperature Protection
The thermal shutdown circuitry senses the die temperature. The threshold is set at 142 °C typical with a 60 °C hysteresis. When the die temperature rises above this threshold (142 °C) the power MOSFET is disabled and remains disabled until the die temperature falls by 60 °C, at which point the MOSFET is re-enabled.

Current Limit
The current limit circuit senses the current in the power MOSFET. When this current exceeds the internal threshold (I_{LIMIT}), the power MOSFET is turned off for the remainder of that cycle. The leading edge blanking circuit inhibits the current limit comparator for a short time (t_{LEB}) after the power MOSFET is turned on. This leading edge blanking time has been set so that current spikes caused by capacitance and rectifier reverse recovery time will not cause premature termination of the MOSFET conduction. The LinkSwitch-II also contains a "di/dt" correction feature to minimize CC variation across the input line range.

6.0 V Regulator
The 6 V regulator charges the bypass capacitor connected to the BYPASS pin to 6 V by drawing a current from the voltage on the DRAIN, whenever the MOSFET is off. The BYPASS pin is the internal supply voltage node. When the MOSFET is on, the device runs off of the energy stored in the bypass capacitor. Extremely low power consumption of the internal circuitry allows the LinkSwitch-II to operate continuously from the current drawn from the DRAIN pin. A bypass capacitor value of either 1 μF or 10 μF is sufficient for both high frequency decoupling and energy storage.

Applications Example

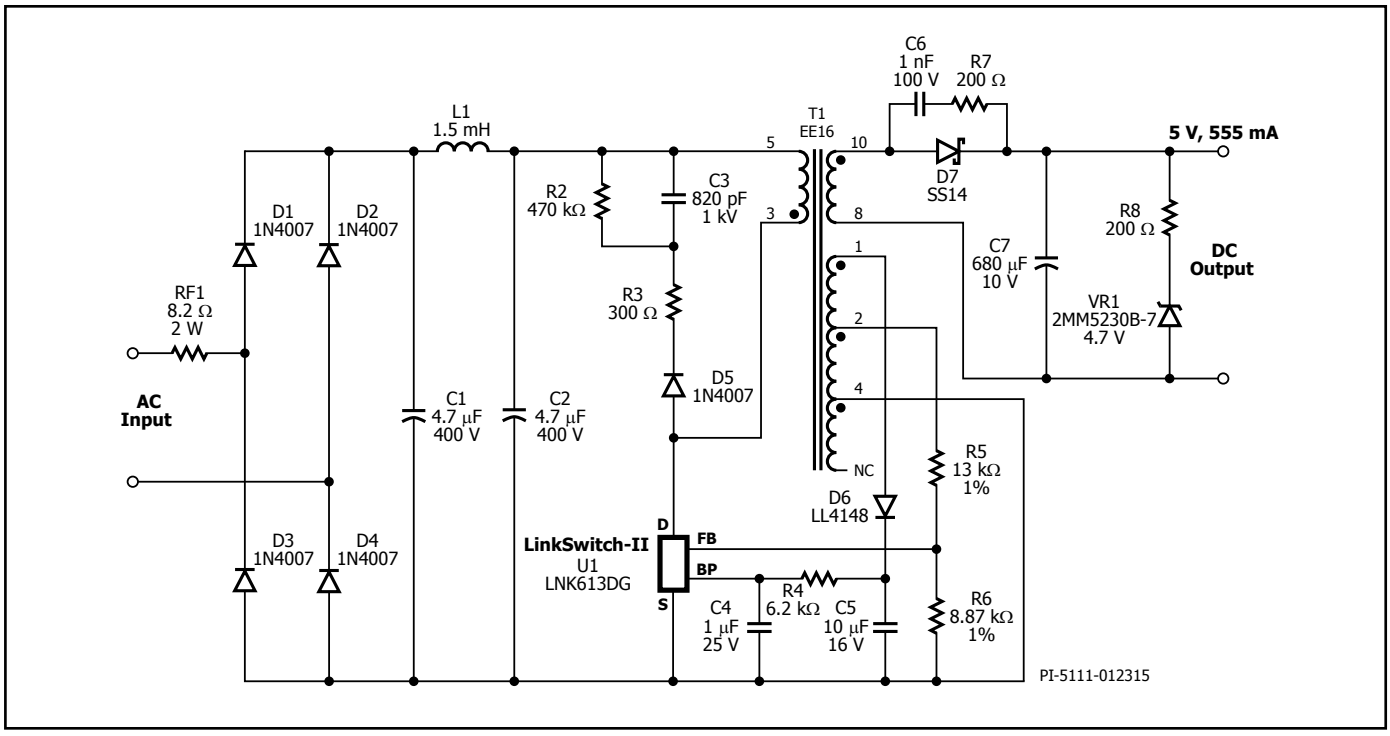

Figure 5. Energy Efficient USB Charger Power Supply (74% Average Efficiency, <30 mW No-load Input Power).

Circuit Description

This circuit shown in Figure 5 is configured as a primary-side regulated flyback power supply utilizing the LNK613DG. With an average efficiency of 74% and <30 mW no-load input power this design easily exceeds the most stringent current energy efficiency requirements.

Input Filter

AC input power is rectified by diodes D1 through D4. The rectified DC is filtered by the bulk storage capacitors C1 and C2. Inductor L1, C1 and C2 form a pi (π) filter, which attenuates conducted differential-mode EMI noise. This configuration along with Power Integrations transformer E-shield™ technology allow this design to meet EMI standard EN55022 class B with good margin without requiring a Y capacitor, even with the output connected to safety earth ground. Fusible resistor RF1 provides protection against catastrophic failure. This should be suitably rated (typically a wire wound type) to withstand the instantaneous dissipation while the input capacitors charge when first connected to the AC line.

LNK 613 Primary

The LNK613DG device (U1) incorporates the power switching device, oscillator, CC/CV control engine, startup, and protection functions. The integrated 700 V MOSFET provides a large drain voltage margin in universal input AC applications, increasing reliability and also reducing the output diode voltage stress by allowing a greater transformer turns ratio. The device is completely self-powered from the BYPASS pin and decoupling capacitor C4. For the LNK61X devices, the bypass capacitor value also selects the amount of output cable voltage drop compensation. A 1 µF value selects the standard compensation. A 10 µF value selects the enhanced compensation.

Table 2 shows the amount of compensation for each device and bypass capacitor value. The LNK60x devices do not provide cable drop compensation.

The optional bias supply formed by D6 and C5 provides the operating current for U1 via resistor R4. This reduces the no-load consumption from ~200 mW to <30 mW and also increases light load efficiency.

The rectified and filtered input voltage is applied to one side of the primary winding of T1. The other side of the transformer's primary winding is driven by the integrated MOSFET in U1. The leakage inductance drain voltage spike is limited by an RCD-R clamp consisting of D5, R2, R3, and C3.

Output Rectification

The secondary of the transformer is rectified by D7, a 1 A, 40 V Schottky barrier type for higher efficiency, and filtered by C7. If lower efficiency is acceptable then this can be replaced with a 1 A PN junction diode for lower cost. In this application C7 was sized to meet the required output voltage ripple specification without requiring a post LC filter. To meet battery self discharge requirement the pre-load resistor has been replaced with a series resistor and Zener network (R8 and VR1). However in designs where this is not a requirement a standard 1 kΩ resistor can be used.

Output Regulation

The LNK613 regulates the output using ON/OFF control in the constant voltage (CV) regulation region of the output character-istic and frequency control for constant current (CC) regulation. The feedback resistors (R5 and R6) were selected using standard 1% resistor values to center both the nominal output voltage and constant current regulation thresholds.

Key Application Considerations

Output Power Table

The data sheet maximum output power table (Table 1) repre-sents the maximum practical continuous output power level that can be obtained under the following assumed conditions:

1. The minimum DC input voltage is 90 V or higher at 85 VAC input. The value of the input capacitance should be large enough to meet these criteria for AC input designs.
2. Secondary output of 5 V with a Schottky rectifier diode.
3. Assumed efficiency of 70%.
4. Discontinuous mode operation (K_p >1.3).
5. The part is board mounted with SOURCE pins soldered to a sufficient area of copper to keep the SOURCE pin temperature at or below 90 °C.
6. Ambient temperature of 50 °C for open frame designs and an internal enclosure temperature of 60 °C for adapter designs.

Note: Higher output power are achievable if an output CC tolerance >±10% is acceptable, allowing the device to be operated at a higher SOURCE pin temperature.

Output Tolerance

LinkSwitch-II provides an overall output tolerance (including line, component variation and temperature) of ±5% for the output voltage in CV operation and ±10% for the output current during CC operation over a junction temperature range of 0 °C to 100 °C for the P/G package. For the D package (SO8) additional CC variance may occur due to stress caused by the manufacturing flow (i.e. solder-wave immersion or IR reflow). A sample power supply build is recommended to verify production tolerances for each design.

BYPASS Pin Capacitor Selection

For LinkSwitch-II 60x Family of Devices (without output cable voltage drop compensation)
A 1 µF BYPASS pin capacitor is recommended. The capacitor voltage rating should be greater than 7 V. The capacitor's dielectric material is not important but tolerance of capacitor should be ≤ ±50%. The capacitor must be physically located close to the LinkSwitch-II BYPASS pin.

For LinkSwitch-II 61x Family of Devices (with output cable voltage drop compensation)
The amount of output cable compensation can be selected with the value of the BYPASS pin capacitor. A value of 1 µF selects the standard cable compensation. A 10 µF capacitor selects the enhanced cable compensation. Table 2 shows the amount of compensation for each LinkSwitch-II device and capacitor value. The capacitor can be either ceramic or electrolytic but tolerance and temperature variation should be ≤ ±50%.

The output voltage that is entered into PIXls design spreadsheet is the voltage at the end of the output cable when the power supply is delivering maximum power. The output voltage at the terminals of the supply is the value measured at the end of the cable multiplied by the output voltage change factor.

LinkSwitch-II Layout Considerations

Circuit Board Layout
LinkSwitch-II is a highly integrated power supply solution that integrates on a single die, both, the controller and the high-voltage MOSFET. The presence of high switching currents and voltages together with analog signals makes it especially important to follow good PCB design practice to ensure stable and trouble free operation of the power supply. See Figure 6 for a recommended circuit board layout for LinkSwitch-II.

When designing a printed circuit board for the LinkSwitch-II based power supply, it is important to follow the following guidelines:

Single Point Grounding
Use a single point (Kelvin) connection at the negative terminal of the input filter capacitor for the LinkSwitch-II SOURCE pin and bias winding return. This improves surge capabilities by returning surge currents from the bias winding directly to the input filter capacitor.

Bypass Capacitor
The BYPASS pin capacitor should be located as close as possible to the SOURCE and BYPASS pins.

Feedback Resistors
Place the feedback resistors directly at the FEEDBACK pin of the LinkSwitch-II device. This minimizes noise coupling.

Thermal Considerations
The copper area connected to the SOURCE pins provides the LinkSwitch-II heat sink. A good estimate is that the LinkSwitch-II will dissipate 10% of the output power. Provide enough copper area to keep the SOURCE pin temperature below 90 °C. Higher temperatures are allowable only if an output current (CC) tolerance above ±10% is acceptable. In this case a maximum SOURCE pin temperature below 110 °C is recommended to provide margin for part to part $R_{DS(ON)}$ variation.

Secondary Loop Area
To minimize leakage inductance and EMI the area of the loop connecting the secondary winding, the output diode and the output filter capacitor should be minimized. In addition, sufficient copper area should be provided at the anode and cathode terminal of the diode for heat sinking. A larger area is preferred at the quiet cathode terminal. A large anode area can increase high frequency radiated EMI.

Electrostatic Discharge Spark Gap
An trace is placed along the isolation barrier to form one electrode of a spark gap. The other electrode on the secondary is formed by the output return node. The spark gap directs ESD energy from the secondary back to the AC input. The trace from the AC input to the spark gap electrode should be spaced away from other traces to prevent unwanted arcing occurring and possible circuit damage.

Drain Clamp Optimization
LinkSwitch-II senses the feedback winding on the primary side to regulate the output. The voltage that appears on the feed-back

LinkSwitch-II Output Cable Voltage Drop Compensation

Device	BYPASS Pin Capacitor Value	Output Voltage Change Factor
LNK613	1 µF	1.035
	10 µF	1.055
LNK614	1 µF	1.045
	10 µF	1.065
LNK615	1 µF	1.050
	10 µF	1.070
LNK616	1 µF	1.060
	10 µF	1.090

Table 2. Cable Compensation Change Factor vs. Device and BYPASS Pin Capacitor Value.

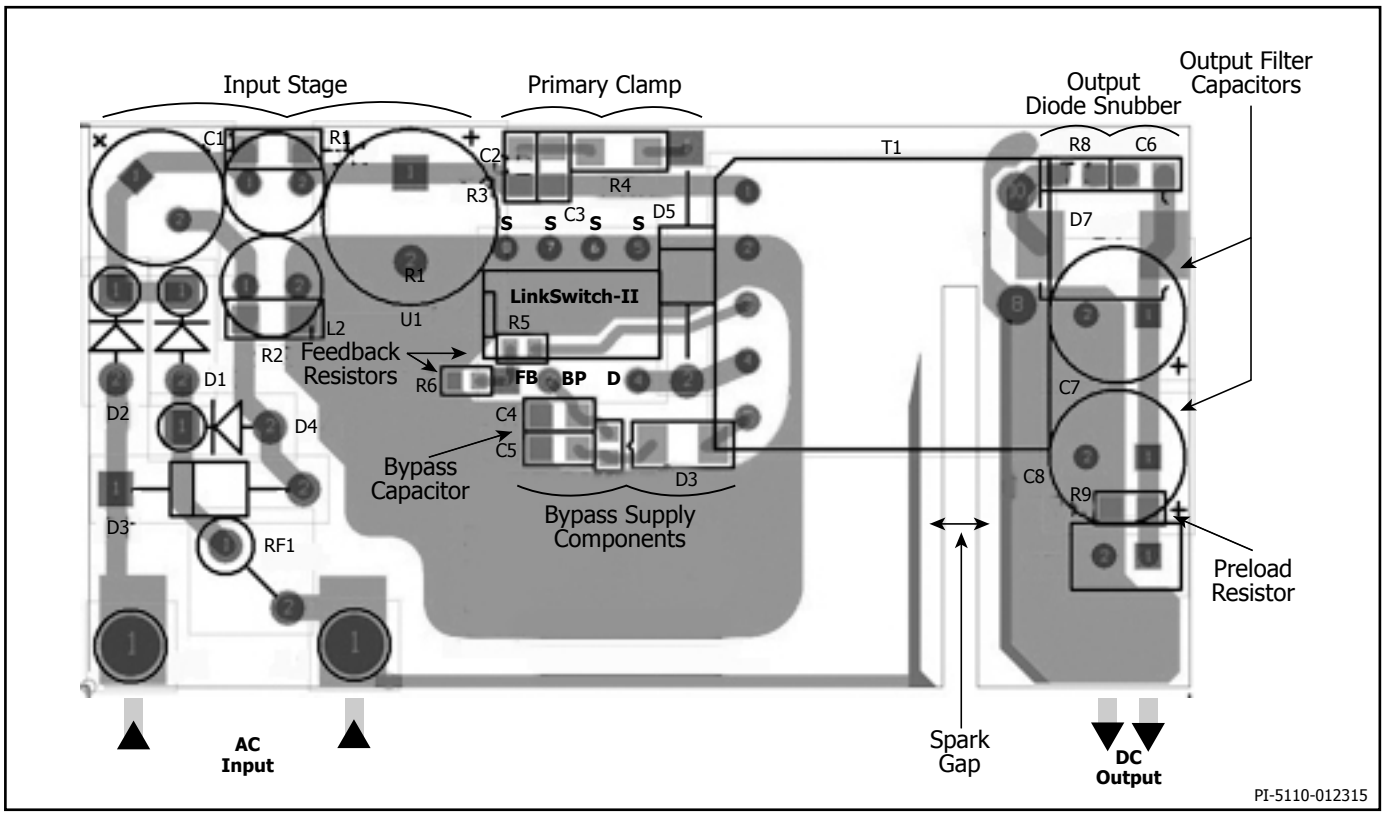

Figure 6. PCB Layout Example Showing 5.1 W Design using P Package.

winding is a reflection of the secondary winding voltage while the internal MOSFET is off. Therefore any leakage inductance induced ringing can affect output regulation. Optimizing the drain clamp to minimize the high frequency ringing will give the best regulation. Figure 7 shows the desired drain voltage waveform compared to Figure 8 with a large undershoot due to the leakage inductance induced ring. This will reduce the output voltage regulation performance. To reduce this adjust the value of the resistor in series with the clamp diode.

Addition of a Bias Circuit for Higher Light Load Efficiency and Lower No-load Input Power Consumption.

The addition of a bias circuit can decrease the no-load input power from ~200 mW down to less than 30 mW at 230 VAC input. Light load efficiency also increases which may avoid the need to use a Schottky barrier vs PN junction output diode while still meeting average efficiency requirements.

The power supply schematic shown in Figure 5 has the bias circuit incorporated. Diode D6, C5 and R4 form the bias circuit. As the output voltage is less than 8 V, an additional transformer winding is needed, AC stacked on top of the feedback winding. This provides a high enough voltage to supply the BYPASS pin even during low switching frequency operation at no-load.

In Figure 5 the additional bias winding (from pin 2 to pin 1) is stacked on top of the feedback winding (pin 4 to pin 2). Diode D6 rectifies the output and C5 is the filter capacitor. A 10 uF capacitor is recommended to hold up the bias voltage at low switching frequencies. The capacitor type is not critical but the voltage rating should be above the maximum value of V_{BIAS}. The recommended current into the BYPASS pin is equal to IC supply current (~0.5 mA) at the minimum bias winding voltage. The BYPASS pin current should not exceed 3 mA at the maximum bias winding voltage. The value of R4 is calculated according to $(V_{BIAS} – V_{BP})/I_{S2}$, where V_{BIAS} (10 V typ.) is the voltage across C5, I_{S2} (0.5 mA typ.) is the IC supply current and V_{BP} (6.0 V typ.) is the BYPASS pin voltage. The parameters I_{S2} and V_{BP} are provided in the parameter table of the LinkSwitch-II data sheet. Diode D6 can be any low cost diode such as FR102, 1N4148 or BAV19/20/21.

Quick Design Checklist

As with any power supply design, all LinkSwitch-II designs should be verified on the bench to make sure that component specifications are not exceeded under worst-case conditions. The following minimum set of tests is strongly recommended:

1. Maximum drain voltage – Verify that peak V_{DS} does not exceed 680 V at the highest input voltage and maximum output power.
2. Maximum drain current – At maximum ambient temperature, maximum input voltage and maximum output load, verify drain current waveforms at start-up for any signs of transformer saturation and excessive leading edge current spikes. LinkSwitch-II has a leading edge blanking time of 170 ns to prevent premature termination of the ON-cycle.
3. Thermal check – At maximum output power, both minimum and maximum input voltage and maximum ambient temperature; verify that temperature specifications are not exceeded for LinkSwitch-II, transformer, output diodes and output capacitors. Enough thermal margin should be allowed for part-to-part variation of the $R_{DS(ON)}$ of LinkSwitch-II, as specified in the data sheet. To assure 10% CC tolerance a maximum SOURCE pin temperature of 90 ºC is recommended.

Design Tools

Up-to-date information on design tools can be found at the Power Integrations web site: www.power.com

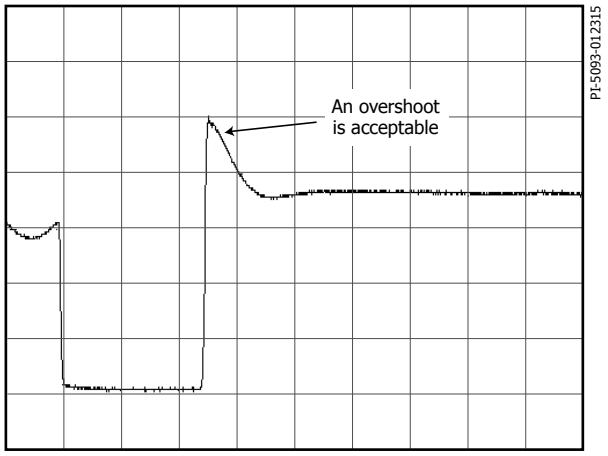

Figure 7. Desired Drain Voltage Waveform with Minimal Leakage Ringing Undershoot.

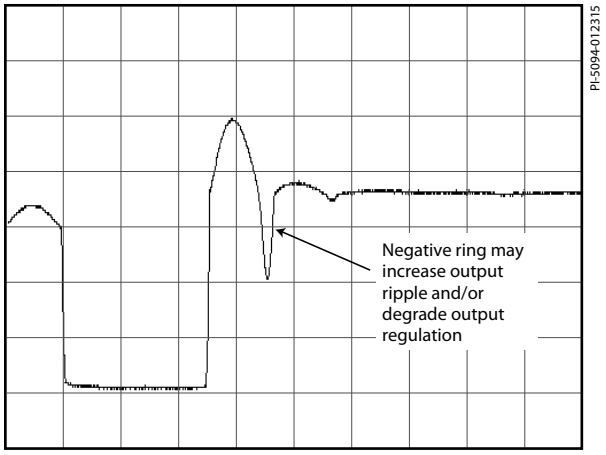

Figure 8. Undesirable Drain Voltage Waveform with Large Leakage Ring Undershoot.

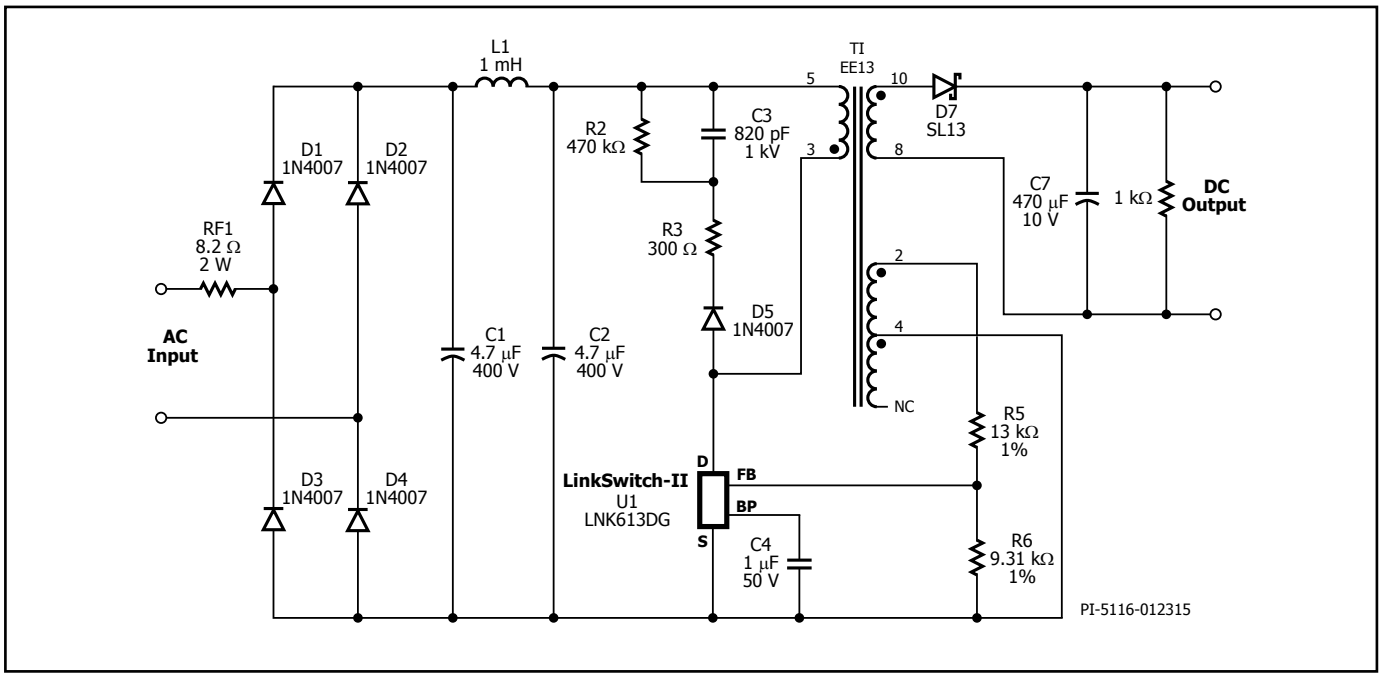

Figure 9. LinkSwitch-II Flyback Power Supply without Bias Supply.

Absolute Maximum Ratings[1,5]

DRAIN Voltage .....-0.3 V to 700 V
DRAIN Peak Current: LNK603/613 .....320 (480) mA[4]
LNK604/614 .....400 (600) mA[4]
LNK605/615 .....504 (750) mA[4]
LNK606/616 .....654 (980) mA[4]
Peak Negative Pulsed Drain Current .....-100 mA[2]
FEEDBACK Pin Voltage ..... -0.3 V to 9 V[6]
FEEDBACK Pin Current .....100 mA
BYPASS Pin Voltage..... -0.3 V to 9 V
BYPASS Pin Current .....10 mA
Storage Temperature .....-65 °C to 150 °C
Operating Junction Temperature.....-40 °C to 150 °C
Lead Temperature[(3)] .....260 °C

Notes:
1. All voltages referenced to SOURCE, T_A = 25 °C.
2. Duration not to exceed 2 ms.
3. 1/16 in. from case for 5 seconds.
4. The higher peak DRAIN current is allowed while the DRAIN voltage is simultaneously less than 400 V.
5. Maximum ratings specified may be applied, one at a time without causing permanent damage to the product. Exposure to Absolute Maximum ratings for extended periods of time may affect product reliability.
6. -1 V for current pulse ≤5 mA out of the pin and a duration of ≤500 ns.

Thermal Resistance

Thermal Resistance: P or G Package:
(θ_{JA}) ..... 70 °C/W[2]; 60 °C/W[3]
(θ_{JC})[1] ..... 11 °C/W
D Package:
(θ_{JA}) .....100 °C/W[2]; 80 °C/W[3]
(θ_{JC})[1] ..... 30 °C/W

Notes:
1. Measured on pin 8 (SOURCE) close to plastic interface.
2. Soldered to 0.36 sq. in. (232 mm²), 2 oz. (610 g/m²) copper clad.
3. Soldered to 1 sq. in. (645 mm²), 2 oz. (610 g/m²) copper clad.

Parameter	Symbol	Conditions SOURCE = 0 V; T_J = 0 to 100 °C (Unless Otherwise Specified)		Min	Typ	Max	Units
Control Functions							
Output Frequency	f_{OSC}	T_J = 25 °C, V_{FB} = V_{FBth} t_{ON} × I_{FB} = 2 mA-µs See Notes A, G	LNK603/6	59	66	73	kHz
			LNK613/6	58	65	72	
Frequency Ratio (Constant Current)	$f_{RATIO(CC)}$	T_J = 25 °C Between V_{FB} = 1.0 V and V_{FB} = 1.6 V		1.59	1.635	1.68	
Frequency Ratio (Inductance Correction)	$f_{RATIO(IC)}$	Between t_{ON} × I_{FB} = 1.6 mA × µs and t_{ON} × I_{FB} = 2 mA × µs		1.160	1.215	1.265	
Frequency Jitter		Peak-Peak Jitter Compared to Average Frequency, T_J = 25 °C			±7		%
Ratio of Output Frequency at Auto-Restart	$f_{OSC(AR)}$	T_J = 25 °C Relative to f_{OSC}		12	16.5	21	%
Maximum Duty Cycle	DC_{MAX}	See Notes D, E			55		%
FEEDBACK Pin Voltage	V_{FBth}	T_J = 25 °C C_{BP} = 10 µF See Note F	LNK603/604P	1.815	1.840	1.865	V
			LNK603/604D	1.855	1.880	1.905	
			LNK605P, LNK605D	1.835	1.860	1.885	
			LNK606P/G/D	1.775	1.800	1.825	
			LNK613/614P	1.935	1.960	1.985	
			LNK613/614/615D	1.975	2.000	2.025	
			LNK615P	1.975	2.000	2.025	
			LNK616P/G/D	1.935	1.960	1.985	
FEEDBACK Pin Voltage Temperature Coefficient	TC_{VFB}				-0.01		%/°C
FEEDBACK Pin Voltage at Turn-OFF Threshold	$V_{FB(AR)}$			0.65	0.72	0.79	V
Cable Compensation Factor	υ_{FB}	LNK613	C_{BP} = 1 µF		1.035		
			C_{BP} = 10 µF		1.055		

Parameter	Symbol	Conditions SOURCE = 0 V; T_J = 0 to 100 °C (Unless Otherwise Specified)		Min	Typ	Max	Units
Control Functions							
Cable Compensation Factor	υ_{FB}	LNK614	C_{BP} = 1 µF		1.045		
			C_{BP} = 10 µF		1.065		
		LNK615	C_{BP} = 1 µF		1.05		
			C_{BP} = 10 µF		1.07		
		LNK616	C_{BP} = 1 µF		1.06		
			C_{BP} = 10 µF		1.09		
Switch ON-Time	t_{ON}	f_{OSC} = 66 kHz, V_{FB} = V_{FBth}, See Note E	I_{FB} = -500 µA		4		µs
			I_{FB} = -1 mA		2		
			I_{FB} = -1.5 mA		1.33		
			I_{FB} = -2 mA		1		
Minimum Switch ON-Time	$t_{ON(min)}$	See Note E			700		ns
FEEDBACK Pin Sampling Delay	t_{FB}			2.35	2.55	2.75	µs
DRAIN Supply Current	I_{S1}	FB Voltage > V_{FBth}			280	330	µA
	I_{S2}	FB Voltage = V_{FBth} -0.1, Switch ON-Time = t_{ON} (MOSFET Switching at f_{OSC})	LNK6X3/4		440	520	
			LNK6X5		480	560	
			LNK6X6		520	600	
BYPASS Pin Charge Current	I_{CH1}	V_{BP} = 0 V	LNK6X3/4	-5.0	-3.4	-1.8	mA
			LNK6X5/6	-7.0	-4.8	-2.5	
	I_{CH2}	V_{BP} = 4 V	LNK6X3/4	-4.0	-2.3	-1.0	
			LNK6X5/6	-5.6	-3.2	-1.4	
BYPASS Pin Voltage	V_{BP}			5.65	6.00	6.25	V
BYPASS Pin Voltage Hysteresis	V_{BPH}			0.70	1.00	1.20	V
BYPASS Pin Shunt Voltage	V_{SHUNT}			6.2	6.5	6.8	V
Circuit Protection							
Current Limit	I_{LIMIT}	LNK6X3 di/dt = 50 mA/µs , T_J = 25 °C		186	200	214	mA
		LNK6X4 di/dt = 60 mA/µs , T_J = 25 °C		233	250	267	
		LNK6X5 di/dt = 70 mA/µs , T_J = 25 °C		293	315	337	
		LNK6X6 di/dt = 100 mA/µs , T_J = 25 °C		382	410	438	
Normalized Output Current	I_O	T_J = 25 °C See Figure 20, See Note F		0.975	1.000	1.025	
Leading Edge Blanking Time	t_{LEB}	T_J = 25 °C See Note E		170	215		ns
Thermal Shutdown Temperature	T_{SD}			135	142	150	°C

Parameter	Symbol	Conditions SOURCE = 0 V; T_J = 0 to 100 °C (Unless Otherwise Specified)		Min	Typ	Max	Units
Circuit Protection							
Thermal Shutdown Hysteresis	T_{SDH}				60		°C
Output							
ON-State Resistance	$R_{DS(ON)}$	LNK6X3 I_D = 50 mA	T_J = 25 °C		24	28	Ω
			T_J = 100 °C		36	42	
		LNK6X4 I_D = 50 mA	T_J = 25 °C		24	28	
			T_J = 100 °C		36	42	
		LNK6X5 I_D = 62 mA	T_J = 25 °C		16	19	
			T_J = 100 °C		24	28	
		LNK6X6 I_D = 82 mA	T_J = 25 °C		9.6	11	
			T_J = 100 °C		14	17	
OFF-State Leakage	I_{DSS1}	V_{DS} = 560 V, See Figure 20 T_J = 125 °C, See Note C				50	µA
	I_{DSS2}	V_{DS} = 375 V, See Figure 20 T_J = 50 °C			15		
Breakdown Voltage	BV_{DSS}	T_J = 25 °C See Figure 20		700			V
DRAIN Supply Voltage				50			V
Auto-Restart ON-Time	t_{AR-ON}	$t_{ON} \times I_{FB}$ = 2 mA-µs, f_{OSC} = 12 kHz V_{FB} = 0 See Notes A, E			450		ms
Auto-Restart OFF-Time	t_{AR-OFF}				1.2	2	s
Open-Loop FEEDBACK Pin Current Threshold	I_{OL}	See Note E			-120		µA
Open-Loop ON-Time		See Note E			90		µs

NOTES:

A. Auto-restart ON-time is a function of switching frequency programmed by $t_{on} \times I_{FB}$ and minimum frequency in CC mode.

B. The current limit threshold is compensated to cancel the effect of current limit delay. As a result the output current stays constant across the input line range.

C. I_{DSS1} is the worst-case OFF-state leakage specification at 80% of BV_{DSS} and maximum operating junction temperature. I_{DSS2} is a typical specification under worst-case application conditions (rectified 265 VAC) for no-load consumption calculations.

D. When the duty-cycle exceeds DC_{MAX} the LinkSwitch-II operates in on-time extension mode.

E. This parameter is derived from characterization.

F. Mechanical stress induced during the assembly may cause shift in this parameter. This shift has no impact on the ability of LinkSwitch-II to meet CC = ±10% and CV = ±5% in mass production given the design follows recommendation in AN-44 and good manufacturing practice.

G. The switching frequency is programmable between 60 kHz and 85 kHz.

Typical Performance Characteristics

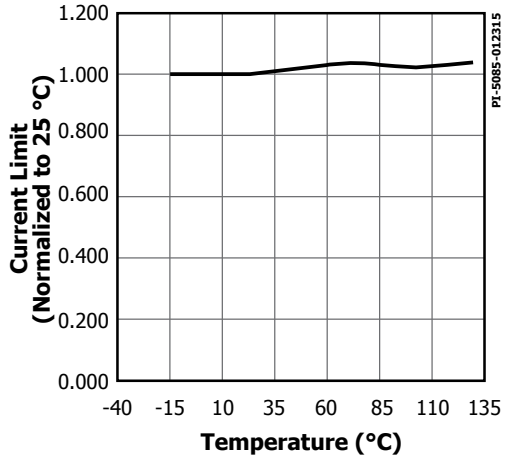

Figure 10. Current Limit vs. Temperature.

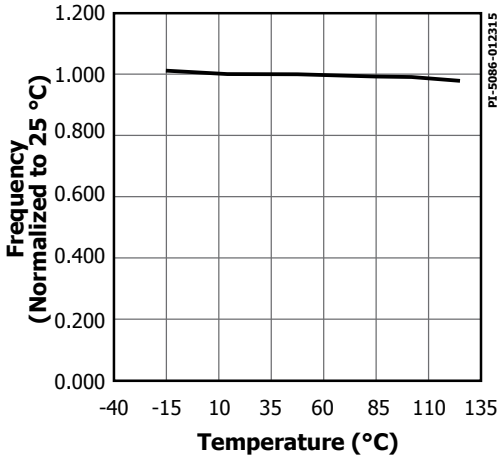

Figure 11. Output Frequency vs. Temperature.

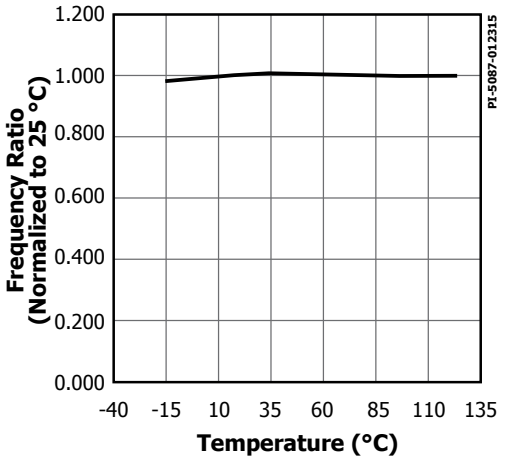

Figure 12. Frequency Ratio vs. Temperature (Constant Current).

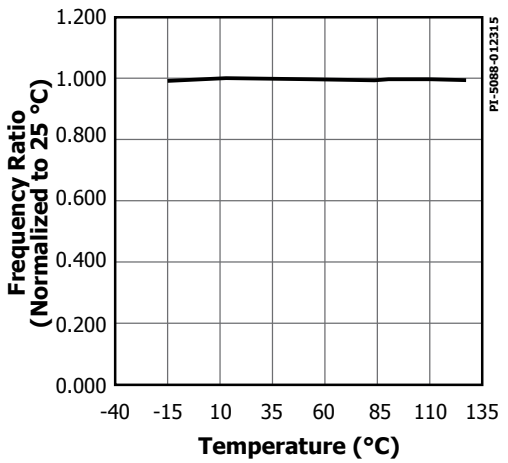

Figure 13. Frequency Ratio vs. Temperature (Inductor Current).

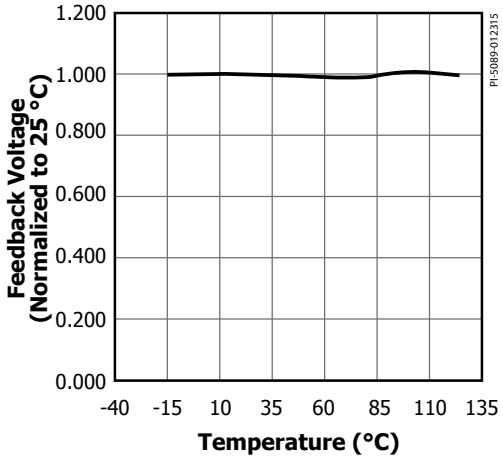

Figure 14. Feedback Voltage vs. Temperature.

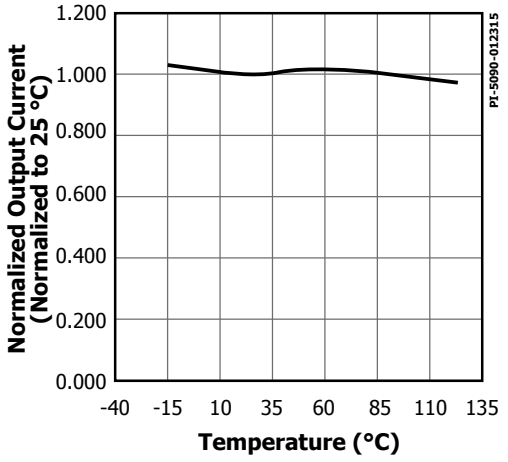

Figure 15. Normalized Output Current vs. Temperature.

Typical Performance Characteristics (cont.)

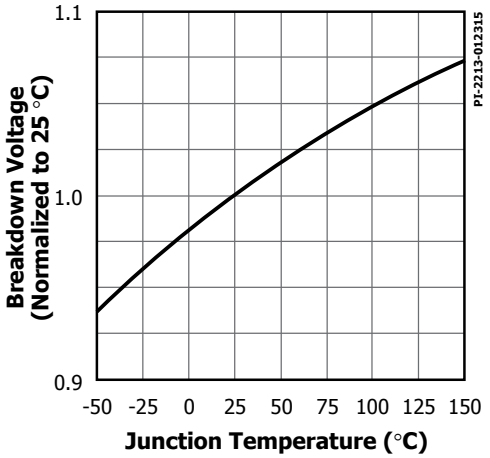

Figure 16. Breakdown vs. Temperature.

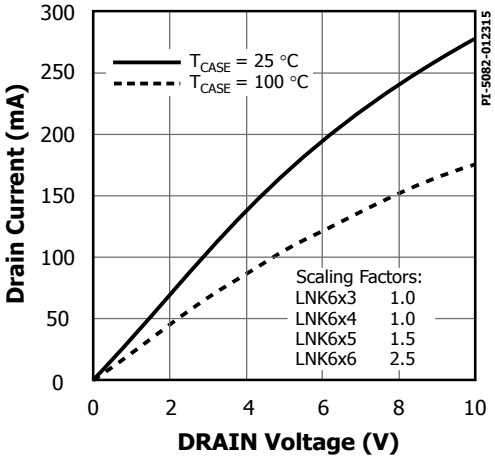

Figure 17. Output Characteristic.

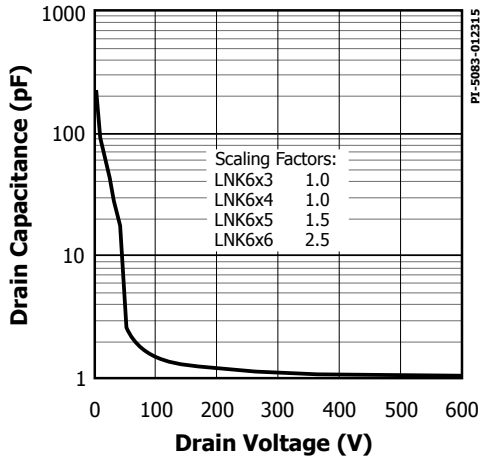

Figure 18. C_{OSS} vs. Drain Voltage.

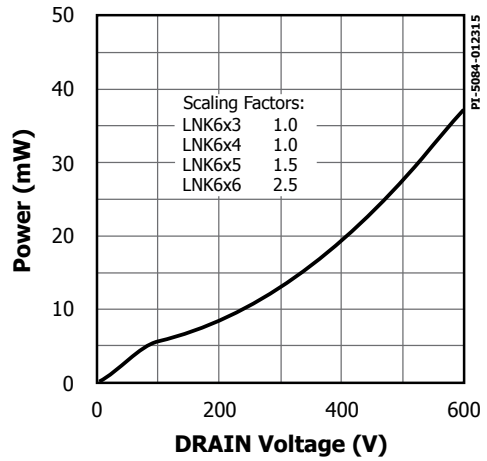

Figure 19. Drain Capacitance Power.

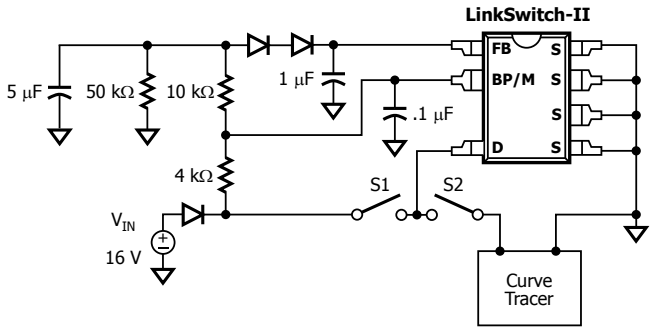

To measure BV_{DSS}, I_{DSS1}, and I_{DSS2} follow these steps:
1) Close S1, open S2.
2) Power-up V_{IN} source (16 V).
3) Open S1, close S2.
4) Measure I/V characteristics of DRAIN pin using the curve tracer.

PI-4962-012915

Figure 20. Test Set-up for Leakage and Breakdown Tests.

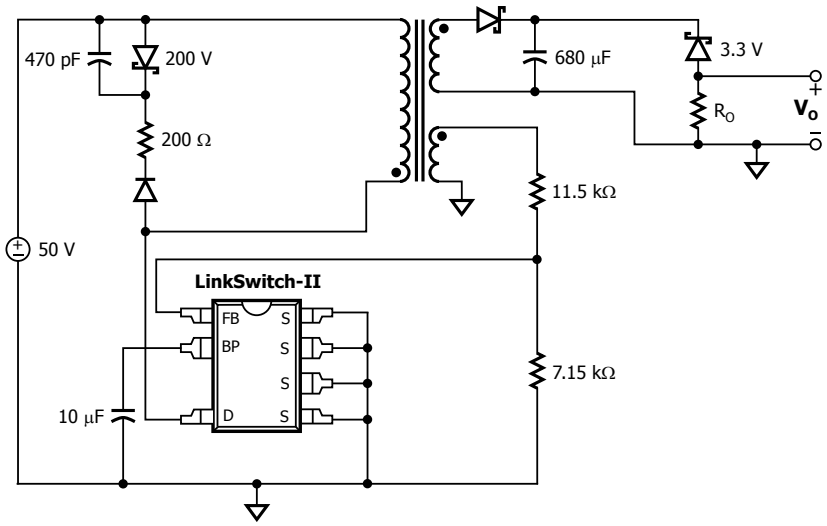

1) The transformer inductance is chosen to set the value of $t_{ON} \times I_{FB}$ to 2 mA × µS.
2) R_O is chosen to operate test circuit in the CC region.
3) V_O is measured.
4) Output current is V_O / R_O.

PI-4963-012315

Figure 21. Test Set-up for Output Current Measurements.

PDIP-8C (P Package)

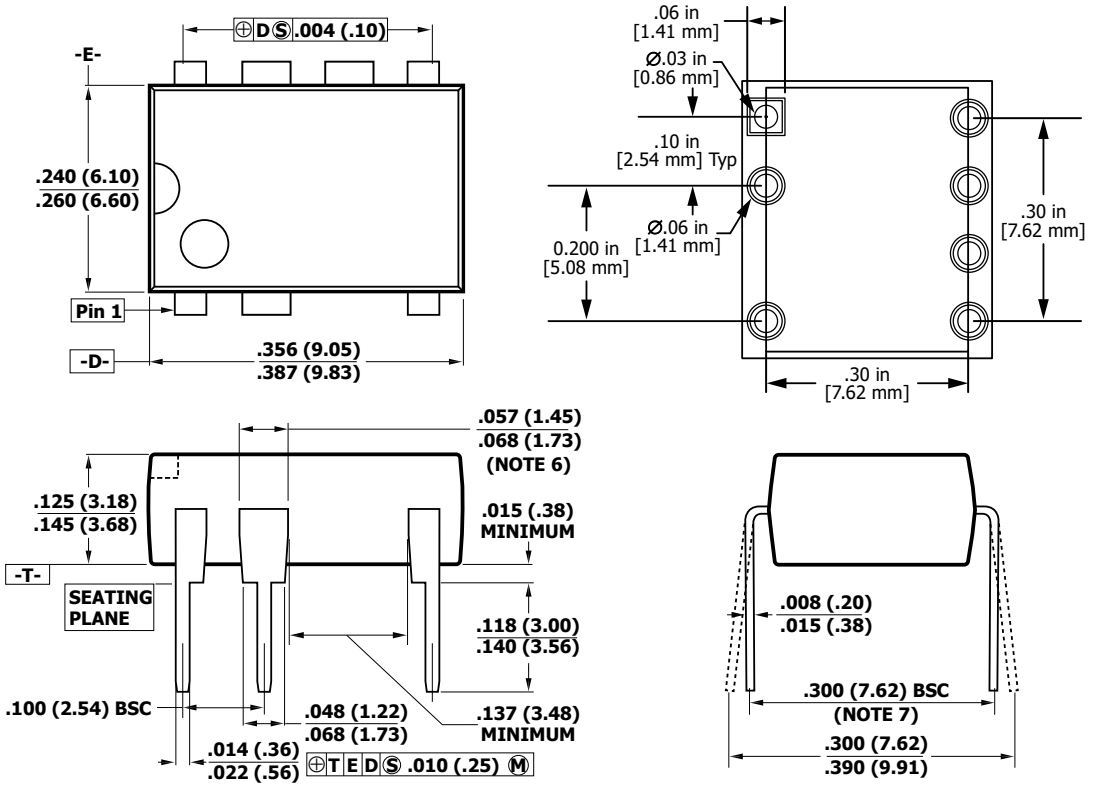

Notes:
1. Package dimensions conform to JEDEC specification MS-001-AB (Issue B 7/85) for standard dual-in-line (DIP) package with .300 inch row spacing.
2. Controlling dimensions are inches. Millimeter sizes are shown in parentheses.
3. Dimensions shown do not include mold flash or other protrusions. Mold flash or protrusions shall not exceed .006 (.15) on any side.
4. Pin locations start with Pin 1, and continue counter-clock-wise to Pin 8 when viewed from the top. The notch and/or dimple are aids in locating Pin 1. Pin 3 is omitted.
5. Minimum metal to metal spacing at the package body for the omitted lead location is .137 inch (3.48 mm).
6. Lead width measured at package body.
7. Lead spacing measured with the leads constrained to be perpendicular to plane T.

P08C

PI-3933b-092920

SMD-8C (G Package)

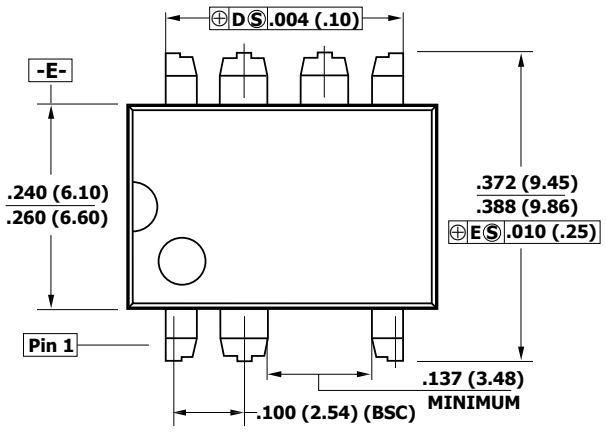

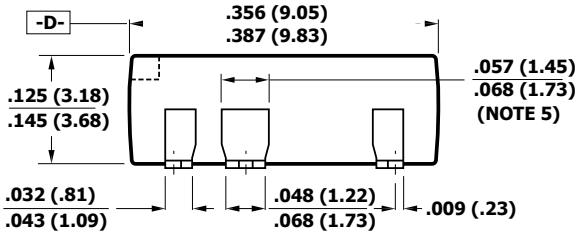

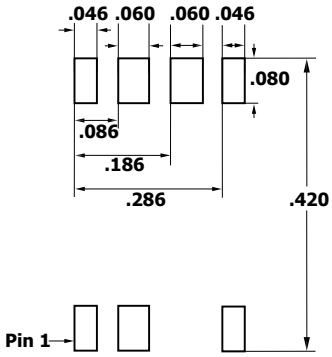

Solder Pad Dimensions

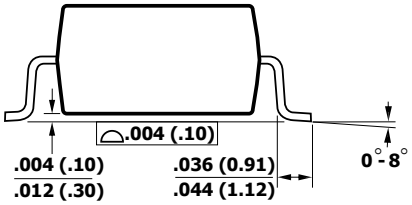

Notes:

1. Controlling dimensions are inches. Millimeter sizes are shown in parentheses.
2. Dimensions shown do not include mold flash or other protrusions. Mold flash or protrusions shall not exceed .006 (.15) on any side.
3. Pin locations start with Pin 1, and continue counter-clockwise to Pin 8 when viewed from the top. Pin 3 is omitted.
4. Minimum metal to metal spacing at the package body for the omitted lead location is .137 inch (3.48 mm).
5. Lead width measured at package body.
6. D and E are referenced datums on the package body.

G08C

PI-4015b-072320

SO-8C (D Package)

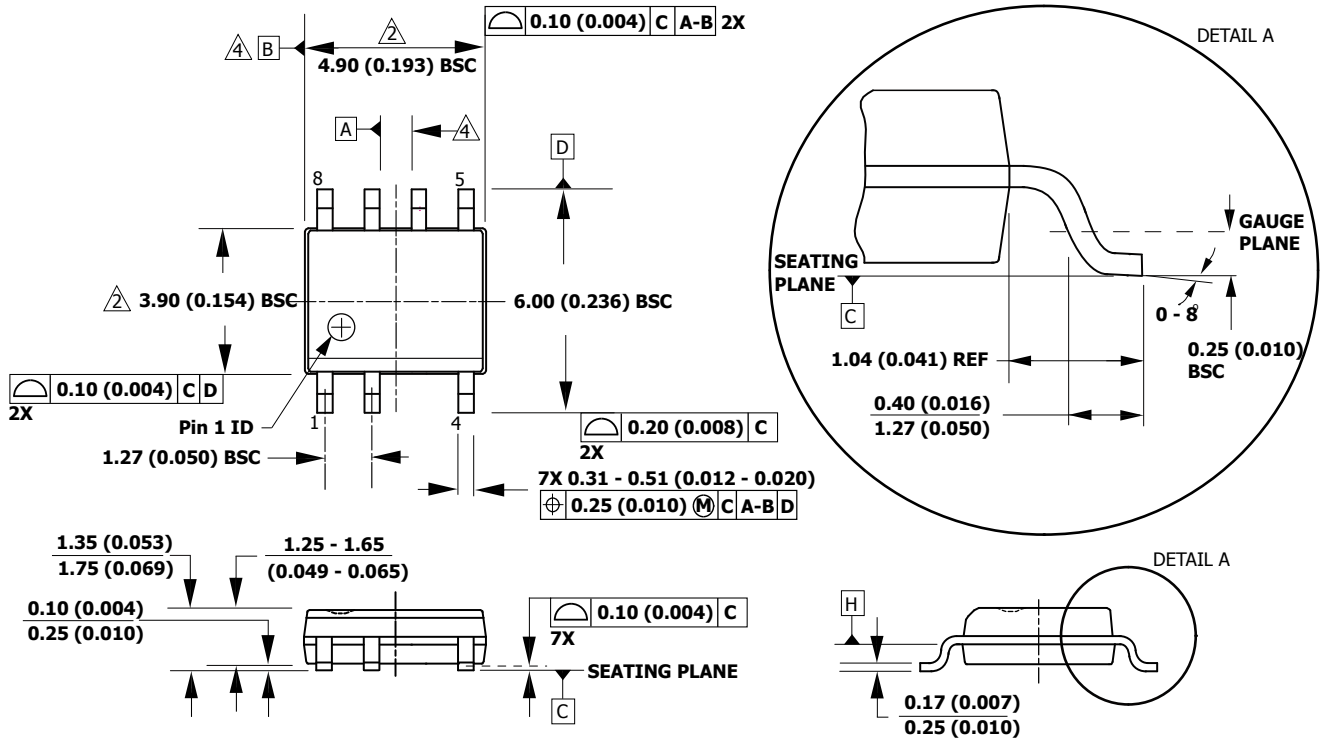

Notes:

1. JEDEC reference: MS-012.
2. Package outline exclusive of mold flash and metal burr.
3. Package outline inclusive of plating thickness.
4. Datums A and B to be determined at datum plane H.
5. Controlling dimensions are in millimeters. Inch dimensions are shown in parenthesis. Angles in degrees.

D07C

PI-4526-012315

Part Ordering Information

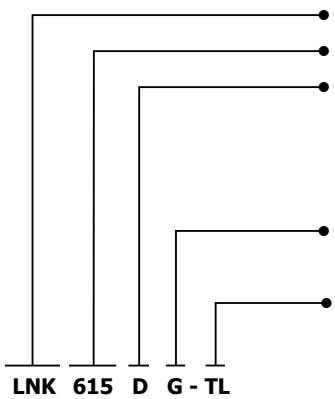

- **LinkSwitch Product Family**
- **II Series Number**
- **Package Identifier**

G	Plastic Surface Mount DIP
P	Plastic DIP
D	Plastic SO-8

- **Package Material**

G	GREEN: Halogen Free and RoHS Compliant

- **Tape & Reel and Other Options**

Blank	Standard Configurations
TL	Tape & Reel, 1 k pcs minimum for G Package. 2.5 k pcs for D Package. Not available for P Package.

Revision	Notes	Date
C	Final data sheet.	06/08
D	Auto-restart time modified PCN-09131.	03/09
E	Introduced Max Current Limit when V DRAIN is below 400 V.	07/09
F	Added LNK616DG and LNK606DG.	01/10
G	Updated Note 6 in Parameter Table.	02/10
H	Updated due to DM process change.	05/13
H	Specified Max BYPASS Pin Current.	03/14
I	Figure removed "Test Set-up for FEEDBACK Pin Measurements" from previous version. Updated to latest Brand Style.	02/15
J	Updated PDIP-8C (P Package) and SMD-8C (G Package) per PCN-16232.	08/16
K	Added Note 6 in the Abs Max Ratings table.	08/19
L	Updated package drawings PDIP-8B and SMD-8C.	10/20

For the latest updates, visit our website: www.power.com

Power Integrations reserves the right to make changes to its products at any time to improve reliability or manufacturability. Power Integrations does not assume any liability arising from the use of any device or circuit described herein. POWER INTEGRATIONS MAKES NO WARRANTY HEREIN AND SPECIFICALLY DISCLAIMS ALL WARRANTIES INCLUDING, WITHOUT LIMITATION, THE IMPLIED WARRANTIES OF MERCHANTABILITY, FITNESS FOR A PARTICULAR PURPOSE, AND NON-INFRINGEMENT OF THIRD PARTY RIGHTS.

Patent Information

The products and applications illustrated herein (including transformer construction and circuits external to the products) may be covered by one or more U.S. and foreign patents, or potentially by pending U.S. and foreign patent applications assigned to Power Integrations. A complete list of Power Integrations patents may be found at www.power.com. Power Integrations grants its customers a license under certain patent rights as set forth at www.power.com/ip.htm.

Life Support Policy

POWER INTEGRATIONS PRODUCTS ARE NOT AUTHORIZED FOR USE AS CRITICAL COMPONENTS IN LIFE SUPPORT DEVICES OR SYSTEMS WITHOUT THE EXPRESS WRITTEN APPROVAL OF THE PRESIDENT OF POWER INTEGRATIONS. As used herein:

1. A Life support device or system is one which, (i) is intended for surgical implant into the body, or (ii) supports or sustains life, and (iii) whose failure to perform, when properly used in accordance with instructions for use, can be reasonably expected to result in significant injury or death to the user.

2. A critical component is any component of a life support device or system whose failure to perform can be reasonably expected to cause the failure of the life support device or system, or to affect its safety or effectiveness.

Power Integrations, the Power Integrations logo, CAPZero, ChiPhy, CHY, DPA-Switch, EcoSmart, E-Shield, eSIP, eSOP, HiperPLC, HiperPFS, HiperTFS, InnoSwitch, Innovation in Power Conversion, InSOP, LinkSwitch, LinkZero, LYTSwitch, SENZero, TinySwitch, TOPSwitch, PI, PI Expert, PowiGaN, SCALE, SCALE-1, SCALE-2, SCALE-3 and SCALE-iDriver, are trademarks of Power Integrations, Inc. Other trademarks are property of their respective companies. ©2020, Power Integrations, Inc.

Power Integrations Worldwide Sales Support Locations

World Headquarters
5245 Hellyer Avenue
San Jose, CA 95138, USA
Main: +1-408-414-9200
Customer Service:
Worldwide: +1-65-635-64480
Americas: +1-408-414-9621
e-mail: usasales@power.com

China (Shanghai)
Rm 2410, Charity Plaza, No. 88
North Caoxi Road
Shanghai, PRC 200030
Phone: +86-21-6354-6323
e-mail: chinasales@power.com

China (Shenzhen)
17/F, Hivac Building, No. 2, Keji Nan
8th Road, Nanshan District,
Shenzhen, China, 518057
Phone: +86-755-8672-8689
e-mail: chinasales@power.com

Germany (AC-DC/LED Sales)
Einsteinring 24
85609 Dornach/Aschheim
Germany
Tel: +49-89-5527-39100
e-mail: eurosales@power.com

Germany (Gate Driver Sales)
HellwegForum 1
59469 Ense
Germany
Tel: +49-2938-64-39990
e-mail: igbt-driver.sales@power.com

India
#1, 14th Main Road
Vasanthanagar
Bangalore-560052 India
Phone: +91-80-4113-8020
e-mail: indiasales@power.com

Italy
Via Milanese 20, 3rd. Fl.
20099 Sesto San Giovanni (MI) Italy
Phone: +39-024-550-8701
e-mail: eurosales@power.com

Japan
Yusen Shin-Yokohama 1-chome Bldg.
1-7-9, Shin-Yokohama, Kohoku-ku
Yokohama-shi,
Kanagawa 222-0033 Japan
Phone: +81-45-471-1021
e-mail: japansales@power.com

Korea
RM 602, 6FL
Korea City Air Terminal B/D, 159-6
Samsung-Dong, Kangnam-Gu,
Seoul, 135-728, Korea
Phone: +82-2-2016-6610
e-mail: koreasales@power.com

Singapore
51 Newton Road
#19-01/05 Goldhill Plaza
Singapore, 308900
Phone: +65-6358-2160
e-mail: singaporesales@power.com

Taiwan
5F, No. 318, Nei Hu Rd., Sec. 1
Nei Hu Dist.
Taipei 11493, Taiwan R.O.C.
Phone: +886-2-2659-4570
e-mail: taiwansales@power.com

UK
Building 5, Suite 21
The Westbrook Centre
Milton Road
Cambridge
CB4 1YG
Phone: +44 (0) 7823-557484
e-mail: eurosales@power.com

ENTEGRECİ

Bu belge www.entegreci.com üzerinden sunulmaktadır.

Elektronik komponent tedarikinde Entegreci

Entegreci, Eskişehir merkezli, Türkiye geneline satış yapan bir elektronik komponent mağazasıdır. Entegreler (IC), mikrodenetleyiciler, transistörler, diyotlar, pasif elemanlar, konnektörler, modüller ve geliştirme kartları tek adetten seri üretim adetlerine kadar satılır. Ürün sayfalarında güncel stok durumunu, fiyatı ve datasheet bağlantısını bulabilirsiniz.

Parça koduyla arama

Üretici parça numarasını yazın; stok ve fiyatı hemen görün.

www.entegreci.com

Ürün kategorileri

Entegreden kapasitöre tüm elektronik komponent kategorileri.

Kategorilere göz atın

Üreticiler

Aradığınız üreticinin ürünlerini tek sayfada inceleyin.

Üreticileri görün

Toplu alım ve teklif

Listede olmayan ya da yüksek adetli parçalar için teklif isteyin.

Teklif isteyin

www.entegreci.com | **destek@entegreci.com** | **0850 305 90 34**

Entegreci is an online electronic components store based in Türkiye. Search by manufacturer part number to see stock, prices and datasheets for integrated circuits, microcontrollers, transistors, passive components and connectors, or request a quote for parts that are not listed.

Bu sayfa Entegreci tarafından eklenmiştir. Belgenin önceki sayfaları asıl yayıncısına aittir ve içeriği değiştirilmemiştir; en güncel sürüm için belgenin yayıncısına başvurun.