Off-Line Digital Green-Mode Quasi-Resonant PWM Controller Integrated with Power MOSFET

1 Description

The iW1830 is a high performance AC/DC power supply control device that uses digital control technology to build peak current mode PWM flyback power supplies. The device includes an internal power MOSFET and operates in quasi-resonant mode and includes key built-in protection features. This combination of features and integration simplifies design, improves efficiency, reduces EMI and lowers the bill of material cost.

The iW1830 removes the need for a secondary feedback circuit while achieving excellent line and load regulation. It also eliminates the need for loop compensation components while maintaining stability over all operating conditions. The pulse-by-pulse waveform analysis allows for a loop response that is much faster than traditional solutions, resulting in improved dynamic load response. The built-in power limit function enables optimized transformer design in universal off-line applications and allows for a wide input voltage range.

Renesas' innovative proprietary technology ensures that power supplies built with the iW1830 can achieve both the highest average efficiency and less than 50mW no-load power consumption in the 15W output power range, and have fast yet smooth start-up with a wide range of capacitive loads with output voltage up to 12V and above, and are ideal for home appliance and monitor adapter applications.

2 Features

- **PrimAccurate™** primary-side feedback eliminates opto-isolators and simplifies design
- Integrated 700V power MOSFET
- Tight constant-voltage regulation across line and load range
- Proprietary optimized 79kHz maximum PWM switching frequency with quasi-resonant operation achieves best size, efficiency and common mode noise
- No-load power consumption < 50mW at $230V_{AC}$ along with fast dynamic load response and short turn-on delay in typical 15W adapter applications
- Adaptively controlled soft-start enables fast and smooth start-up for a wide range of capacitive loads (from 330µF to 6,000µF) with output voltage of 12V and above
- **EZ-EMI®** design enhances manufacturability
- Adaptive multi-mode PWM/PFM control improves efficiency
- Built-in single-point fault protections against output short-circuit, output over-voltage and output over-current
- Built-in over-temperature protection (OTP)
- No audible noise over entire operating range

3 Applications

- Home appliances
- Power adapters for network devices and monitors
- Universal input AC/DC adapters (up to 15W)



© 2022 Renesas Electronics

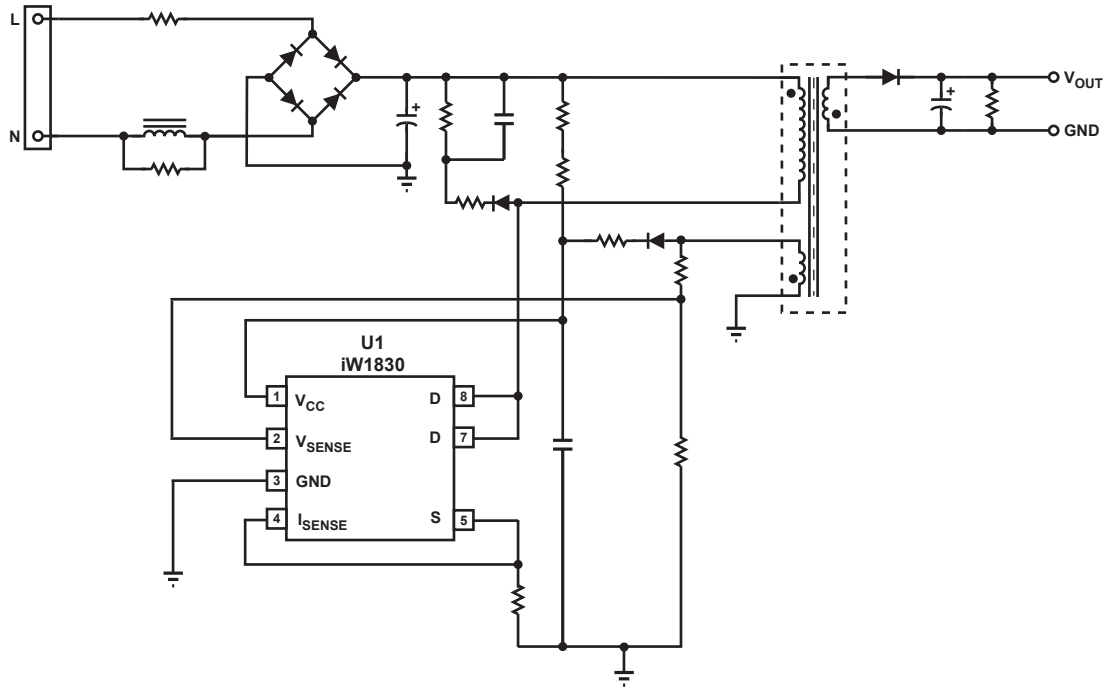

Figure 3.1 : iW1830 Typical Application Circuit

WARNING:

The iW1830 is intended for high voltage AC/DC offline applications. Contact with live high voltage offline circuits or improper use of components may cause lethal or life threatening injuries or property damage. Only qualified professionals with safety training and proper precaution should operate with high voltage offline circuits.

iW1830 Output Power Table at Universal Input ($85V_{AC}$–$264V_{AC}$)

Condition	Open Frame[1]
Output Power (W)[2]	15.0

Notes:

Note 1. Maximum practical continuous output power measured at open frame ambient temperture of 50°C and device package/ pin temperatures of ≤ 100°C while minimum bulk capacitor voltage is kept above 90V and no special heatsinking is used (test unit is placed in a non-ventilated environment).

Note 1. The output power can vary depending on the power supply system designs and operating conditions.

© 2022 Renesas Electronics

4 Pinout Description

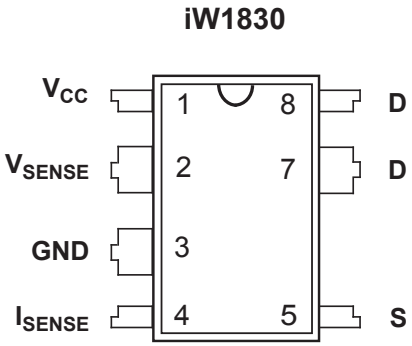

Figure 4.1 : 7-Lead PDIP Package

Pin Number	Pin Name	Type	Pin Description
1	V_{CC}	Power Input	IC power supply.
2	V_{SENSE}	Analog Input	Auxiliary voltage sense. Used for primary side regulation.
3	GND	Ground	Ground.
4	I_{SENSE}	Analog Input	Primary current sense. Used for cycle-by-cycle peak current control and limit.
5	S	MOSFET Source	Source of the internal power MOSFET (pin 4 and pin 5 must be shorted externally on the PCB).
7	D	MOSFET Drain	Drain of the internal power MOSFET.
8	D	MOSFET Drain	Drain of the internal power MOSFET.

© 2022 Renesas Electronics

5 Absolute Maximum Ratings

Absolute maximum ratings are the parameter values or ranges which can cause permanent damage if exceeded.

Parameter	Symbol	Value	Units
DC supply voltage range (pin 1, I_{CC} = 20mA max)	V_{CC}	-0.3 to 25.0	V
Continuous DC supply current at V_{CC} pin (V_{CC} = 15V)	I_{CC}	20	mA
V_{SENSE} input (pin 2, I_{Vsense} ≤ 10mA)		-0.7 to 4.0	V
I_{SENSE} input (pin 4)		-0.3 to 4.0	V
Drain-source voltage	V_{DSS}	700	V
Continuous drain current @ T_C=25°C	I_D	4	A
Continuous drain current @ T_C=100°C		2.9	
Pulsed drain current (Note 1)	I_{DM}	16	A
Single Pulse Avalanche Energy (starting T_J = 25°C)	E_{AS}	150	mJ
Maximum junction temperature	T_{JMAX}	150	°C
Operating junction temperature	T_{JOPT}	-40 to 150	°C
Storage temperature	T_{STG}	–55 to 150	°C
Electrostatic Discharge Capability (Human Body Model), JEDEC JS-001-2012	$ESD_{(HBM)}$	±4.5	kV
Electrostatic Discharge Capability (Charge Device Model), JEDEC JESD22-C101	$ESD_{(CDM)}$	±1.0	kV
Latch-up test per JESD78A		±100	mA

Notes:

Note 1. Repetitive rating; pulse width limited by maximum junction temperature.

6 Thermal Characteristics

Parameter	Symbol	Value	Units
Thermal Resistance Junction-to-Ambient[1]	θ_{JA}	80	°C/W
Thermal Resistance Junction-to-GND pin (pin 3)[2]	ψ_{JB}	25	°C/W
Thermal Resistance Junction-to-Drain pin (pin 7 and pin 8)[2]	$\psi_{J\text{-}MOSFET}$	35	°C/W
Thermal Shutdown Threshold[3]	T_{SD}	150	°C
Thermal Shutdown Recovery[3]	$T_{SD\text{-}R}$	120	°C

Notes:

Note 1. Device is mounted on a JEDEC single-sided board with 100mm^2 of 35µm thick copper, in a one-cubic-foot natural convection chamber with 1W dissipated power.

Note 2. ψ_{JB} [Psi Junction to Board] provides an estimation of the die junction temperature relative to the PCB [Board] surface temperature. $\psi_{J\text{-}MOSFET}$ [Psi Junction to Drain pin] provides an estimation of the die junction temperature relative to the Drain pin [internal MOSFET Drain] surface temperature. ψ_{JB} is measured at the ground pin (pin 3) without using any thermal adhesives. See Section 10.14 for more information.

Note 3. These parameters are typical and they are guaranteed by design.

© 2022 Renesas Electronics

7 Physical Dimensions

7-Lead Plastic Dual In-Line (PDIP) Package

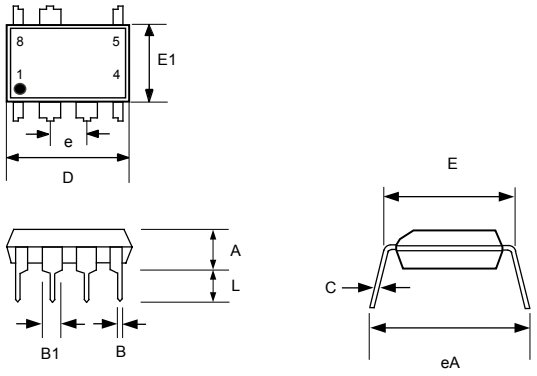

Symbol	Inches		Millimeters	
	MIN	MAX	MIN	MAX
A	0.135	0.145	3.429	3.683
B	0.015	0.021	0.381	0.533
B1	0.050	0.065	1.270	1.650
C	0.007	0.014	0.200	0.356
D	0.367	0.387	9.322	9.830
E	0.300	0.325	7.620	8.255
E1	0.240	0.260	6.096	6.604
e	0.1 BSC		2.54 BSC	
eA	0.332	0.392	8.433	9.957
L	0.120	0.140	3.048	3.556

Compliant to JEDEC Standard MS12F

Controlling dimensions are in inches; millimeter dimensions are for reference only

This product is RoHS compliant and Halide free.

Soldering Temperature Resistance:
[a] Package is IPC/JEDEC Std 020D Moisture Sensitivity Level 1
[b] Package exceeds JEDEC Std No. 22-A111 for Solder Immersion Resistance; package can withstand 10 s immersion < 260˚C

Dimension D does not include mold flash, protrusions or gate burrs. Mold flash, protrusions or gate burrs shall not exceed 0.15 mm per end. Dimension E1 does not include interlead flash or protrusion. Interlead flash or protrusion shall not exceed 0.25 mm per side.

The package top may be smaller than the package bottom. Dimensions D and E1 are determined at the outermost extremes of the plastic bocy exclusive of mold flash, tie bar burrs, gate burrs and interlead flash, but including any mismatch between the top and bottom of the plastic body.

8 Ordering Information

Part no.	Options	Package	Description
iW1830-00	No CC operation, no latch	PDIP-7	Tube[1]
iW1830-01	OVP/OTP latch, no CC operation with latch	PDIP-7	Tube[1]

Note 1: Packing quantity is 50 units/tube, 1,000 units (20 tubes)/box. Minimum ordering quantity is 1,000 units.

© 2022 Renesas Electronics

Off-Line Digital Green-Mode Quasi-Resonant PWM Controller Integrated with Power MOSFET

IMPORTANT NOTICE AND DISCLAIMER

RENESAS ELECTRONICS CORPORATION AND ITS SUBSIDIARIES (“RENESAS”) PROVIDES TECHNICAL SPECIFICATIONS AND RELIABILITY DATA (INCLUDING DATASHEETS), DESIGN RESOURCES (INCLUDING REFERENCE DESIGNS), APPLICATION OR OTHER DESIGN ADVICE, WEB TOOLS, SAFETY INFORMATION, AND OTHER RESOURCES “AS IS” AND WITH ALL FAULTS, AND DISCLAIMS ALL WARRANTIES, EXPRESS OR IMPLIED, INCLUDING, WITHOUT LIMITATION, ANY IMPLIED WARRANTIES OF MERCHANTABILITY, FITNESS FOR A PARTICULAR PURPOSE, OR NON-INFRINGEMENT OF THIRD PARTY INTELLECTUAL PROPERTY RIGHTS.

These resources are intended for developers skilled in the art designing with Renesas products. You are solely responsible for (1) selecting the appropriate products for your application, (2) designing, validating, and testing your application, and (3) ensuring your application meets applicable standards, and any other safety, security, or other requirements. These resources are subject to change without notice. Renesas grants you permission to use these resources only for development of an application that uses Renesas products. Other reproduction or use of these resources is strictly prohibited. No license is granted to any other Renesas intellectual property or to any third party intellectual property. Renesas disclaims responsibility for, and you will fully indemnify Renesas and its representatives against, any claims, damages, costs, losses, or liabilities arising out of your use of these resources. Renesas’ products are provided only subject to Renesas’ Terms and Conditions of Sale or other applicable terms agreed to in writing. No use of any Renesas resources expands or otherwise alters any applicable warranties or warranty disclaimers for these products.

© 2022 Renesas Electronics Corporation. All rights reserved.

RoHS Compliance

Dialog Semiconductor’s suppliers certify that its products are in compliance with the requirements of Directive 2011/65/EU of the European Parliament on the restriction of the use of certain hazardous substances in electrical and electronic equipment. RoHS certificates from our suppliers are available on request.

(Rev.1.0 Mar 2020)

Corporate Headquarters

TOYOSU FORESIA, 3-2-24 Toyosu
Koto-ku, Tokyo 135-0061, Japan
www.renesas.com

Contact Information

For further information on a product, technology, the most up-to-date version of a document, or your nearest sales office, please visit:
www.renesas.com/contact/

Trademarks

Renesas and the Renesas logo are trademarks of Renesas Electronics Corporation. All trademarks and registered trademarks are the property of their respective owners.

ENTEGRECİ

Bu belge www.entegreci.com üzerinden sunulmaktadır.

Elektronik komponent tedarikinde Entegreci

Entegreci, Eskişehir merkezli, Türkiye geneline satış yapan bir elektronik komponent mağazasıdır. Entegreler (IC), mikrodenetleyiciler, transistörler, diyotlar, pasif elemanlar, konnektörler, modüller ve geliştirme kartları tek adetten seri üretim adetlerine kadar satılır. Ürün sayfalarında güncel stok durumunu, fiyatı ve datasheet bağlantısını bulabilirsiniz.

Parça koduyla arama

Üretici parça numarasını yazın; stok ve fiyatı hemen görün.

www.entegreci.com

Ürün kategorileri

Entegreden kapasitöre tüm elektronik komponent kategorileri.

Kategorilere göz atın

Üreticiler

Aradığınız üreticinin ürünlerini tek sayfada inceleyin.

Üreticileri görün

Toplu alım ve teklif

Listede olmayan ya da yüksek adetli parçalar için teklif isteyin.

Teklif isteyin

www.entegreci.com | **destek@entegreci.com** | **0850 305 90 34**

Entegreci is an online electronic components store based in Türkiye. Search by manufacturer part number to see stock, prices and datasheets for integrated circuits, microcontrollers, transistors, passive components and connectors, or request a quote for parts that are not listed.

Bu sayfa Entegreci tarafından eklenmiştir. Belgenin önceki sayfaları asıl yayıncısına aittir ve içeriği değiştirilmemiştir; en güncel sürüm için belgenin yayıncısına başvurun.