ON Semiconductor

Is Now



To learn more about onsemi™, please visit our website at
www.onsemi.com

onsemi and onsemi and other names, marks, and brands are registered and/or common law trademarks of Semiconductor Components Industries, LLC dba "**onsemi**" or its affiliates and/or subsidiaries in the United States and/or other countries. **onsemi** owns the rights to a number of patents, trademarks, copyrights, trade secrets, and other intellectual property. A listing of **onsemi** product/patent coverage may be accessed at www.onsemi.com/site/pdf/Patent-Marking.pdf. **onsemi** reserves the right to make changes at any time to any products or information herein, without notice. The information herein is provided "as-is" and **onsemi** makes no warranty, representation or guarantee regarding the accuracy of the information, product features, availability, functionality, or suitability of its products for any particular purpose, nor does **onsemi** assume any liability arising out of the application or use of any product or circuit, and specifically disclaims any and all liability, including without limitation special, consequential or incidental damages. Buyer is responsible for its products and applications using **onsemi** products, including compliance with all laws, regulations and safety requirements or standards, regardless of any support or applications information provided by **onsemi**. "Typical" parameters which may be provided in **onsemi** data sheets and/or specifications can and do vary in different applications and actual performance may vary over time. All operating parameters, including "Typicals" must be validated for each customer application by customer's technical experts. **onsemi** does not convey any license under any of its intellectual property rights nor the rights of others. **onsemi** products are not designed, intended, or authorized for use as a critical component in life support systems or any FDA Class 3 medical devices or medical devices with a same or similar classification in a foreign jurisdiction or any devices intended for implantation in the human body. Should Buyer purchase or use **onsemi** products for any such unintended or unauthorized application, Buyer shall indemnify and hold **onsemi** and its officers, employees, subsidiaries, affiliates, and distributors harmless against all claims, costs, damages, and expenses, and reasonable attorney fees arising out of, directly or indirectly, any claim of personal injury or death associated with such unintended or unauthorized use, even if such claim alleges that **onsemi** was negligent regarding the design or manufacture of the part. **onsemi** is an Equal Opportunity/Affirmative Action Employer. This literature is subject to all applicable copyright laws and is not for resale in any manner. Other names and brands may be claimed as the property of others.

ON Semiconductor®

Advanced Power MOSFET

IRFM120A

IEEE802.3af Compatible

FEATURES

- ❑ Avalanche Rugged Technology
- ❑ Rugged Gate Oxide Technology
- ❑ Lower Input Capacitance
- ❑ Improved Gate Charge
- ❑ Extended Safe Operating Area
- ❑ Lower Leakage Current : 10 μA (Max.) @ V_{DS} = 100V
- ❑ Lower $R_{DS(ON)}$: 0.155 Ω (Typ.)

BV_{DSS} = 100 V

$R_{DS(on)}$ = 0.2 Ω

I_D = 2.3 A

SOT-223



1. Gate 2. Drain 3. Source

Absolute Maximum Ratings

Symbol	Characteristic	Value	Units
V_{DSS}	Drain-to-Source Voltage	100	V
I_D	Continuous Drain Current (T_A=25℃)	2.3	A
	Continuous Drain Current (T_A=70℃)	1.84	
I_{DM}	Drain Current-Pulsed ①	18	A
V_{GS}	Gate-to-Source Voltage	±20	V
E_{AS}	Single Pulsed Avalanche Energy ②	123	mJ
I_{AR}	Avalanche Current ①	2.3	A
E_{AR}	Repetitive Avalanche Energy ①	0.24	mJ
dv/dt	Peak Diode Recovery dv/dt ③	6.5	V/ns
P_D	Total Power Dissipation (T_A=25℃) *	2.4	W
	Linear Derating Factor *	0.019	W/℃
T_J , T_{STG}	Operating Junction and Storage Temperature Range	- 55 to +150	℃
T_L	Maximum Lead Temp. for Soldering Purposes, 1/8" from case for 5-seconds	300	

Thermal Resistance

Symbol	Characteristic	Typ.	Max.	Units
$R_{\theta JA}$	Junction-to-Ambient *	--	52	℃/W

* When mounted on the minimum pad size recommended (PCB Mount).

© 2002 Semiconductor Components Industries, LLC
December-2017, Rev 3

Publication Order Number:
IRFM120A/D

Electrical Characteristics (T_A=25℃ unless otherwise specified)

Symbol	Characteristic	Min.	Typ.	Max.	Units	Test Condition
BV_{DSS}	Drain-Source Breakdown Voltage	100	--	--	V	V_{GS}=0V,I_D=250μA
$\Delta BV/\Delta T_J$	Breakdown Voltage Temp. Coeff.	--	0.12	--	V/℃	I_D=250μA ***See Fig 7***
$V_{GS(th)}$	Gate Threshold Voltage	2.0	--	4.0	V	V_{DS}=5V,I_D=250μA
I_{GSS}	Gate-Source Leakage , Forward	--	--	100	nA	V_{GS}=20V
	Gate-Source Leakage , Reverse	--	--	-100		V_{GS}=-20V
I_{DSS}	Drain-to-Source Leakage Current	--	--	1	μA	V_{DS}=30V ⑥
		--	--	10		V_{DS}=100V
		--	--	100		V_{DS}=80V,T_A=125℃
$R_{DS(on)}$	Static Drain-Source On-State Resistance	--	--	0.2	Ω	V_{GS}=10V,I_D=1.15A ④
g_{fs}	Forward Transconductance	--	3.12	--	S	V_{DS}=40V,I_D=1.15A ④
C_{iss}	Input Capacitance	--	370	480	pF	V_{GS}=0V,V_{DS}=25V,f =1MHz ***See Fig 5***
C_{oss}	Output Capacitance	--	95	110		
C_{rss}	Reverse Transfer Capacitance	--	38	45		
$t_{d(on)}$	Turn-On Delay Time	--	14	40	ns	V_{DD}=50V,I_D=9.2A, R_G=18Ω ***See Fig 13*** ④ ⑤
t_r	Rise Time	--	14	40		
$t_{d(off)}$	Turn-Off Delay Time	--	36	90		
t_f	Fall Time	--	28	70		
Q_g	Total Gate Charge	--	16	22	nC	V_{DS}=80V,V_{GS}=10V, I_D=9.2A ***See Fig 6 & Fig 12*** ④ ⑤
Q_{gs}	Gate-Source Charge	--	2.7	--		
Q_{gd}	Gate-Drain("Miller") Charge	--	7.8	--		

Source-Drain Diode Ratings and Characteristics

Symbol	Characteristic	Min.	Typ.	Max.	Units	Test Condition
I_S	Continuous Source Current	--	--	2.3	A	Integral reverse pn-diode in the MOSFET
I_{SM}	Pulsed-Source Current ①	--	--	18		
V_{SD}	Diode Forward Voltage ④	--	--	1.5	V	T_J=25℃,I_S=2.3A,V_{GS}=0V
t_{rr}	Reverse Recovery Time	--	98	--	ns	T_J=25℃,I_F=9.2A
Q_{rr}	Reverse Recovery Charge	--	0.34	--	μC	di_F/dt=100A/μs ④

Notes ;

① Repetitive Rating : Pulse Width Limited by Maximum Junction Temperature

② L=35mH, I_{AS}=2.3A, V_{DD}=25V, R_G=27Ω, Starting T_J=25℃

③ I_{SD}≤9.2A, di/dt≤300A/μs, V_{DD}≤BV_{DSS} , Starting T_J=25℃

④ Pulse Test : Pulse Width = 250μs, Duty Cycle ≤ 2%

⑤ Essentially Independent of Operating Temperature

⑥ Adjusted for Cisco

Fig 1. Output Characteristics

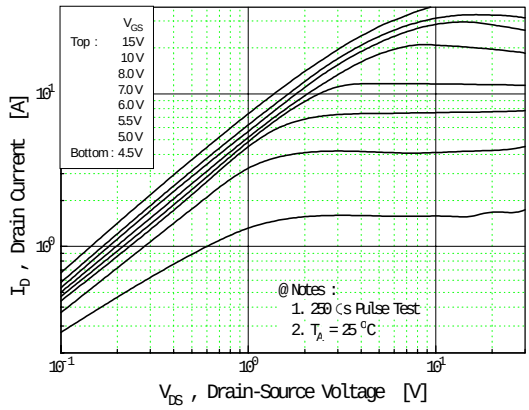

Fig 2. Transfer Characteristics

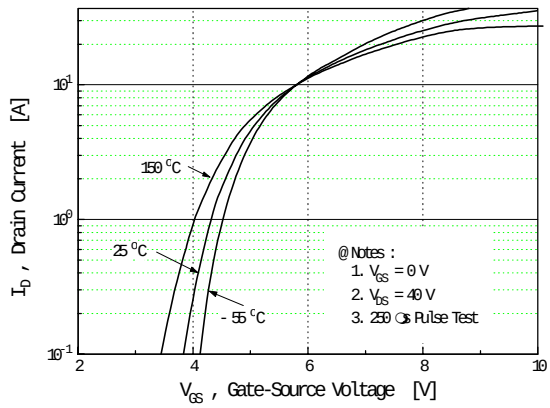

Fig 3. On-Resistance vs. Drain Current

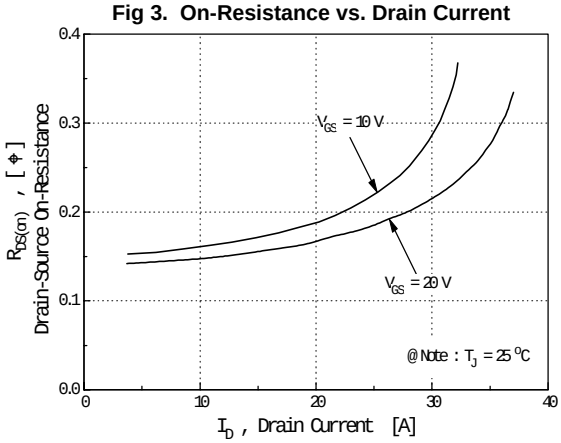

Fig 4. Source-Drain Diode Forward Voltage

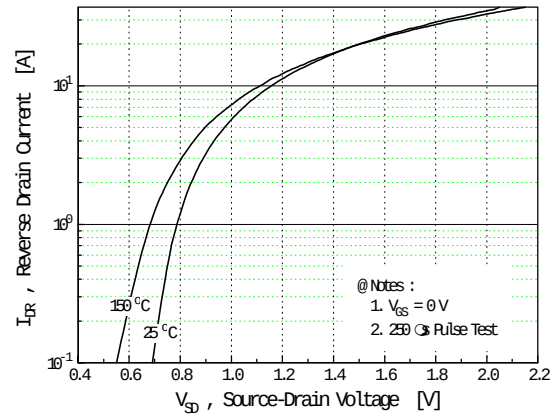

Fig 5. Capacitance vs. Drain-Source Voltage

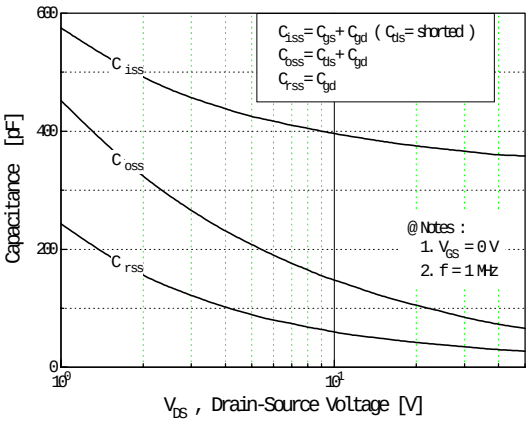

Fig 6. Gate Charge vs. Gate-Source Voltage

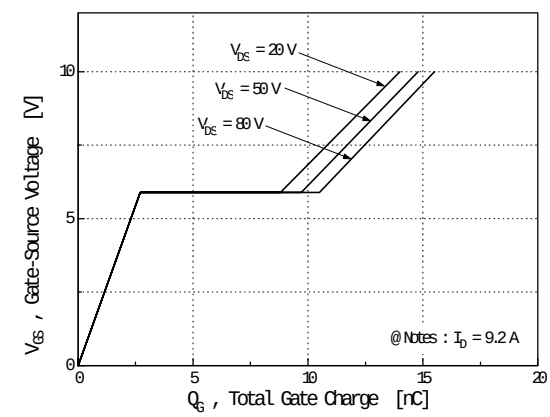

Fig 7. Breakdown Voltage vs. Temperature

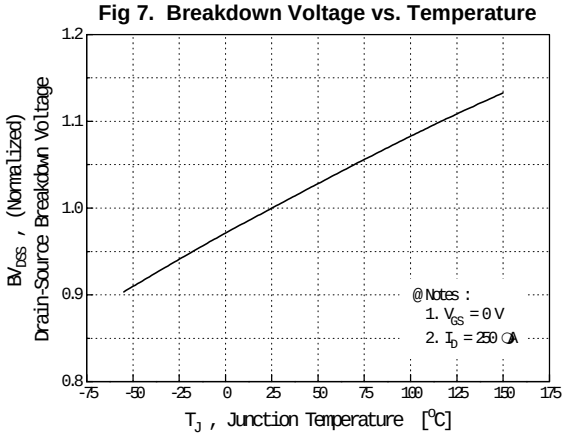

Fig 8. On-Resistance vs. Temperature

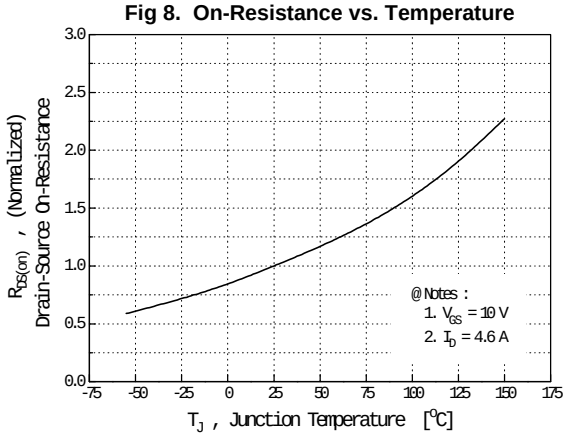

Fig 9. Max. Safe Operating Area

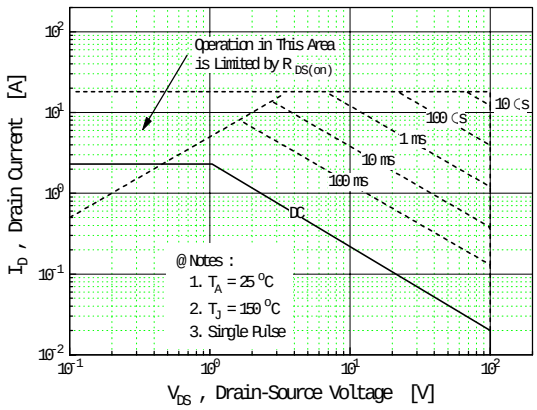

Fig 10. Max. Drain Current vs. Ambient Temperature

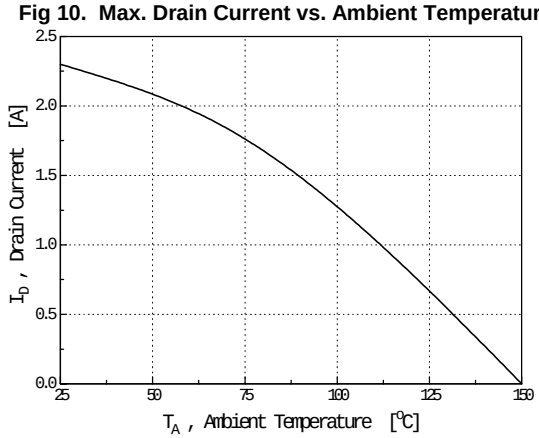

Fig 11. Thermal Response

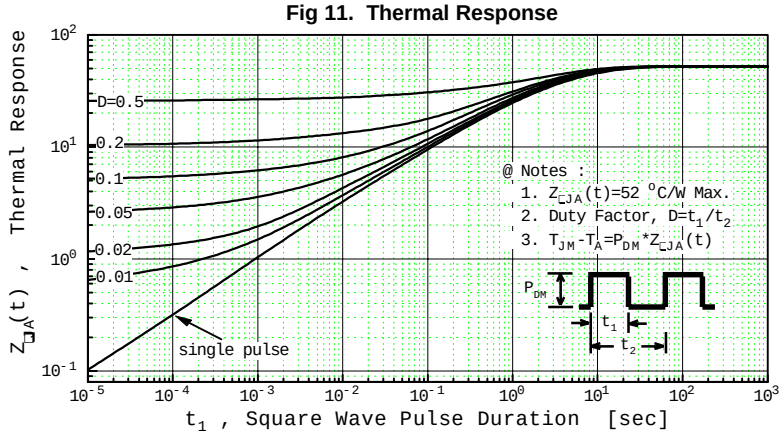

Fig 12. Gate Charge Test Circuit & Waveform

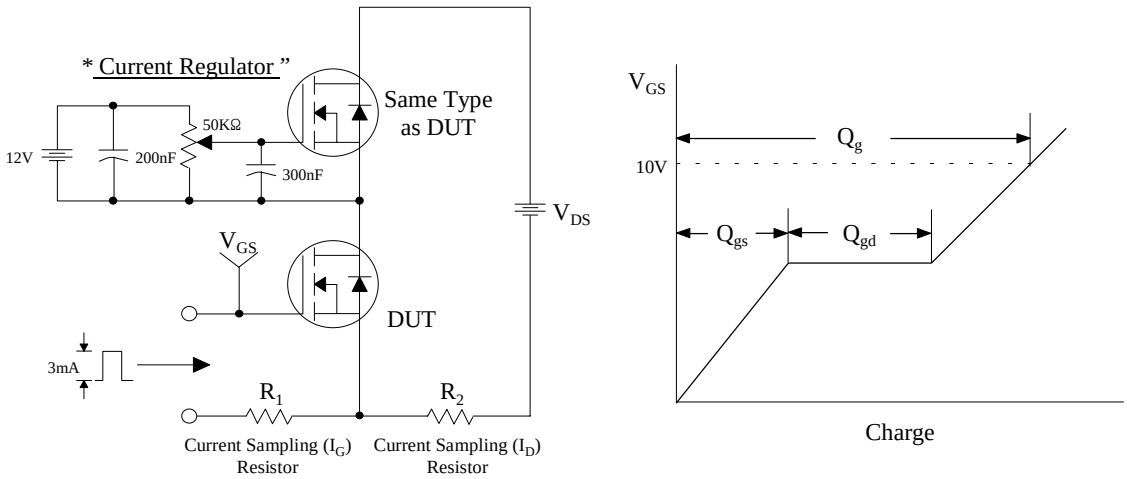

Fig 13. Resistive Switching Test Circuit & Waveforms

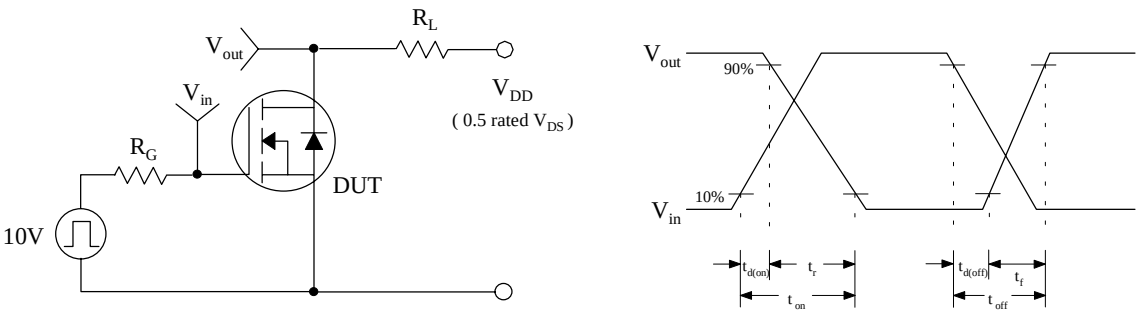

Fig 14. Unclamped Inductive Switching Test Circuit & Waveforms

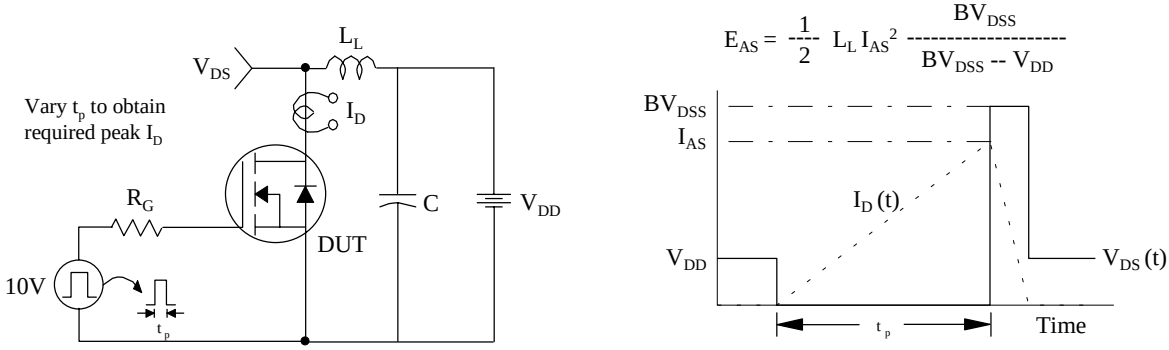

Fig 15. Peak Diode Recovery dv/dt Test Circuit & Waveforms

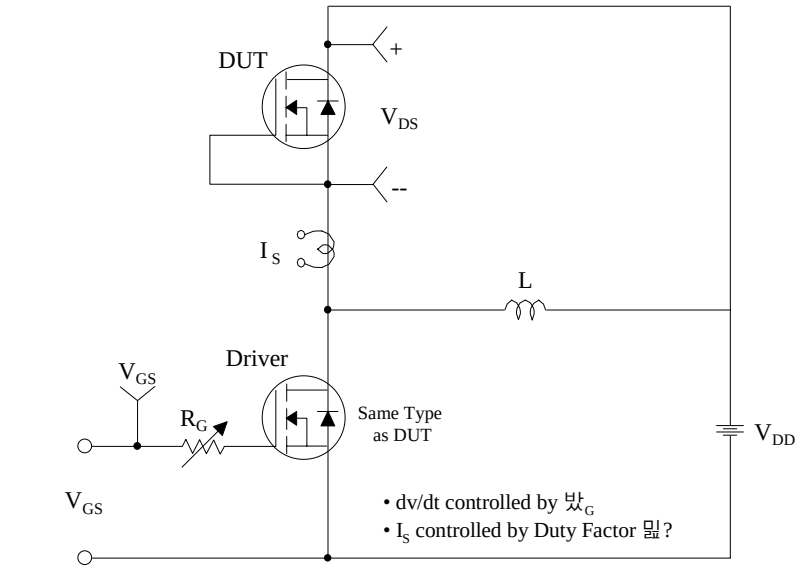

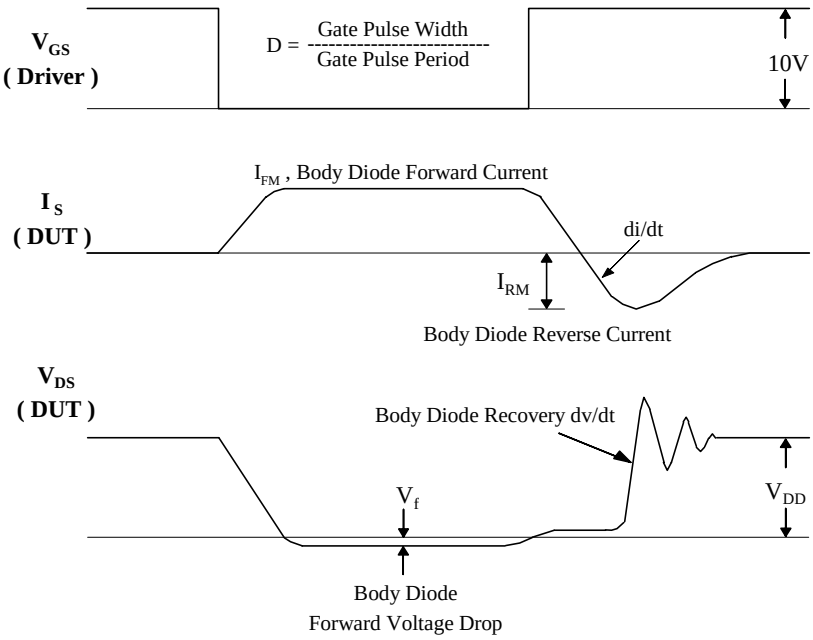

ON Semiconductor and ON are trademarks of Semiconductor Components Industries, LLC dba ON Semiconductor or its subsidiaries in the United States and/or other countries. ON Semiconductor owns the rights to a number of patents, trademarks, copyrights, trade secrets, and other intellectual property. A listing of ON Semiconductor's product/patent coverage may be accessed at www.onsemi.com/site/pdf/Patent−Marking.pdf. ON Semiconductor reserves the right to make changes without further notice to any products herein. ON Semiconductor makes no warranty, representation or guarantee regarding the suitability of its products for any particular purpose, nor does ON Semiconductor assume any liability arising out of the application or use of any product or circuit, and specifically disclaims any and all liability, including without limitation special, consequential or incidental damages. Buyer is responsible for its products and applications using ON Semiconductor products, including compliance with all laws, regulations and safety requirements or standards, regardless of any support or applications information provided by ON Semiconductor. "Typical" parameters which may be provided in ON Semiconductor data sheets and/or specifications can and do vary in different applications and actual performance may vary over time. All operating parameters, including "Typicals" must be validated for each customer application by customer's technical experts. ON Semiconductor does not convey any license under its patent rights nor the rights of others. ON Semiconductor products are not designed, intended, or authorized for use as a critical component in life support systems or any FDA Class 3 medical devices or medical devices with a same or similar classification in a foreign jurisdiction or any devices intended for implantation in the human body. Should Buyer purchase or use ON Semiconductor products for any such unintended or unauthorized application, Buyer shall indemnify and hold ON Semiconductor and its officers, employees, subsidiaries, affiliates, and distributors harmless against all claims, costs, damages, and expenses, and reasonable attorney fees arising out of, directly or indirectly, any claim of personal injury or death associated with such unintended or unauthorized use, even if such claim alleges that ON Semiconductor was negligent regarding the design or manufacture of the part. ON Semiconductor is an Equal Opportunity/Affirmative Action Employer. This literature is subject to all applicable copyright laws and is not for resale in any manner.

PUBLICATION ORDERING INFORMATION

LITERATURE FULFILLMENT:
Literature Distribution Center for ON Semiconductor
19521 E. 32nd Pkwy, Aurora, Colorado 80011 USA
Phone: 303−675−2175 or 800−344−3860 Toll Free USA/Canada
Fax: 303−675−2176 or 800−344−3867 Toll Free USA/Canada
Email: orderlit@onsemi.com

N. American Technical Support: 800−282−9855 Toll Free USA/Canada
Europe, Middle East and Africa Technical Support:
Phone: 421 33 790 2910
Japan Customer Focus Center
Phone: 81−3−5817−1050

ON Semiconductor Website: **www.onsemi.com**

Order Literature: http://www.onsemi.com/orderlit

For additional information, please contact your local Sales Representative

ENTEGRECİ

Bu belge www.entegreci.com üzerinden sunulmaktadır.

Elektronik komponent tedarikinde Entegreci

Entegreci, Eskişehir merkezli, Türkiye geneline satış yapan bir elektronik komponent mağazasıdır. Entegreler (IC), mikrodenetleyiciler, transistörler, diyotlar, pasif elemanlar, konnektörler, modüller ve geliştirme kartları tek adetten seri üretim adetlerine kadar satılır. Ürün sayfalarında güncel stok durumunu, fiyatı ve datasheet bağlantısını bulabilirsiniz.

Parça koduyla arama

Üretici parça numarasını yazın; stok ve fiyatı hemen görün.

www.entegreci.com

Ürün kategorileri

Entegreden kapasitöre tüm elektronik komponent kategorileri.

Kategorilere göz atın

Üreticiler

Aradığınız üreticinin ürünlerini tek sayfada inceleyin.

Üreticileri görün

Toplu alım ve teklif

Listede olmayan ya da yüksek adetli parçalar için teklif isteyin.

Teklif isteyin

www.entegreci.com | **destek@entegreci.com** | **0850 305 90 34**

Entegreci is an online electronic components store based in Türkiye. Search by manufacturer part number to see stock, prices and datasheets for integrated circuits, microcontrollers, transistors, passive components and connectors, or request a quote for parts that are not listed.

Bu sayfa Entegreci tarafından eklenmiştir. Belgenin önceki sayfaları asıl yayıncısına aittir ve içeriği değiştirilmemiştir; en güncel sürüm için belgenin yayıncısına başvurun.