IRF1405PbF

$V_{(BR)DSS}$	55V
$R_{DS(on)}$ max.	5.3mΩ
I_D	169A⑥

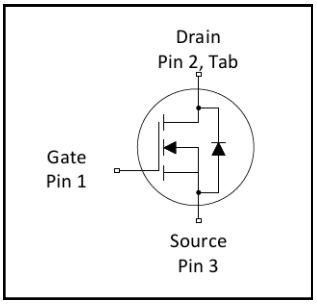

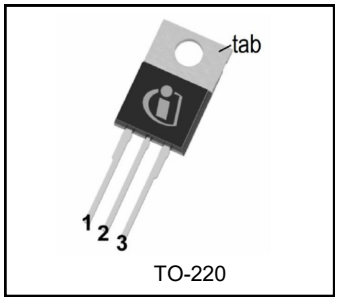

G	D	S
Gate	Drain	Source

Typical Applications

- Industrial motor drive

Features

- Advanced Process Technology
- Ultra Low On-Resistance
- Dynamic dv/dt Rating
- 175°C Operating Temperature
- Fast Switching
- Fully Avalanche Rated
- Lead-Free

Description

This Stripe Planar design of HEXFET Power MOSFETs utilizes the latest processing techniques to achieve extremely low on-resistance per silicon area. Additional features of this HEXFET power MOSFET are a 175°C junction operating temperature, fast switching speed and improved repetitive avalanche rating. These benefits combine to make this design an extremely efficient and reliable device for use in a wide variety of applications.

Base part number	Package Type	Standard Pack		Orderable Part Number
		Form	Quantity	
IRF1405PbF	TO-220	Tube	50	IRF1405PbF

Absolute Maximum Rating

Symbol	Parameter	Max.	Units
I_D @ T_C = 25°C	Continuous Drain Current, V_{GS} @ 10V	169⑥	A
I_D @ T_C = 100°C	Continuous Drain Current, V_{GS} @ 10V	118⑥	
I_{DM}	Pulsed Drain Current ①	680	
P_D @T_C = 25°C	Maximum Power Dissipation	330	W
	Linear Derating Factor	2.2	W/°C
V_{GS}	Gate-to-Source Voltage	± 20	V
E_{AS}	Single Pulse Avalanche Energy ②	560	mJ
I_{AR}	Avalanche Current	See Fig. 12a,12b,15,16	A
E_{AR}	Repetitive Avalanche Energy ⑦		mJ
dv/dt	Peak Diode Recovery dv/dt③	5.0	V/ns
T_J T_{STG}	Operating Junction and Storage Temperature Range	-55 to + 175	°C
	Soldering Temperature, for 10 seconds (1.6mm from case)	300	
	Mounting torque, 6-32 or M3 screw	10 lbf•in (1.1N•m)	

Thermal Resistance

Symbol	Parameter	Typ.	Max.	Units
$R_{\theta JC}$	Junction-to-Case	—	0.45	°C/W
$R_{\theta CS}$	Case-to-Sink, Flat, Greased Surface	0.50	—	
$R_{\theta JA}$	Junction-to-Ambient	—	62	

Static @ T_J = 25°C (unless otherwise specified)

	Parameter	Min.	Typ.	Max.	Units	Conditions
$V_{(BR)DSS}$	Drain-to-Source Breakdown Voltage	55	—	—	V	V_{GS} = 0V, I_D = 250µA
$\Delta V_{(BR)DSS}/\Delta T_J$	Breakdown Voltage Temp. Coefficient	—	0.057	—	V/°C	Reference to 25°C, I_D = 1mA
$R_{DS(on)}$	Static Drain-to-Source On-Resistance	—	4.6	5.3	mΩ	V_{GS} = 10V, I_D = 101A ④
$V_{GS(th)}$	Gate Threshold Voltage	2.0	—	4.0	V	V_{DS} = V_{GS}, I_D = 250µA
gfs	Forward Trans conductance	69	—	—	S	V_{DS} = 25V, I_D = 101A④
I_{DSS}	Drain-to-Source Leakage Current	—	—	20	µA	V_{DS} = 55V, V_{GS} = 0V
		—	—	250		V_{DS} = 44V,V_{GS} = 0V,T_J =150°C
I_{GSS}	Gate-to-Source Forward Leakage	—	—	200	nA	V_{GS} = 20V
	Gate-to-Source Reverse Leakage	—	—	-200		V_{GS} = -20V

Dynamic Electrical Characteristics @ T_J = 25°C (unless otherwise specified)

Q_g	Total Gate Charge	—	170	260	nC	I_D = 101A
Q_{gs}	Gate-to-Source Charge	—	44	66		V_{DS} = 44V
Q_{gd}	Gate-to-Drain Charge	—	62	93		V_{GS} = 10V④
$t_{d(on)}$	Turn-On Delay Time	—	13	—	ns	V_{DD} = 38V
t_r	Rise Time	—	190	—		I_D = 101A
$t_{d(off)}$	Turn-Off Delay Time	—	130	—		R_G= 1.1Ω
t_f	Fall Time	—	110	—		V_{GS} = 10V ④
L_D	Internal Drain Inductance	—	4.5	—	nH	Between lead, 6mm (0.25in.)
L_S	Internal Source Inductance	—	7.5	—		from package and center of die contact
C_{iss}	Input Capacitance	—	5480	—	pF	V_{GS} = 0V
C_{oss}	Output Capacitance	—	1210	—		V_{DS} = 25V
C_{rss}	Reverse Transfer Capacitance	—	280	—		f = 1.0MHz, See Fig.5
C_{oss}	Output Capacitance	—	5210	—		V_{GS} = 0V,V_{DS} = 1.0V, f = 1.0MHz
C_{oss}	Output Capacitance	—	900	—		V_{GS} = 0V,V_{DS} = 44V, f = 1.0MHz
$C_{oss\ eff.}$	Effective Output Capacitance	—	1500	—		V_{GS} = 0V,V_{DS} = 0V to 44V

Diode Characteristics

	Parameter	Min.	Typ.	Max.	Units	Conditions
I_S	Continuous Source Current (Body Diode)	—	—	169⑥	A	MOSFET symbol showing the
I_{SM}	Pulsed Source Current (Body Diode) ①	—	—	680		integral reverse p-n junction diode.
V_{SD}	Diode Forward Voltage	—	—	1.3	V	T_J = 25°C,I_S = 101A,V_{GS} = 0V ④
t_{rr}	Reverse Recovery Time	—	88	130	ns	T_J = 25°C ,I_F = 101A
Q_{rr}	Reverse Recovery Charge	—	250	380	nC	di/dt = 100A/µs ④

Notes:

① Repetitive rating; pulse width limited by max. junction temperature. (See fig. 11).

② Starting T_J = 25°C, L = 0.11mH, R_G = 25Ω, I_{AS} = 101A. (See fig. 12)

③ I_{SD} ≤ 101A, di/dt ≤ 210A/µs, V_{DD} ≤ $V_{(BR)DSS}$, T_J ≤ 175°C.

④ Pulse width ≤ 400µs; duty cycle ≤ 2%.

⑤ C_{oss} eff. is a fixed capacitance that gives the same charging time as C_{oss} while V_{DS} is rising from 0 to 80% V_{DSS} .

⑥ Calculated continuous current based on maximum allowable junction temperature. Package limitation current is 75A.

⑦ Limited by T_{Jmax} , see Fig.12a, 12b, 15, 16 for typical repetitive avalanche performance.

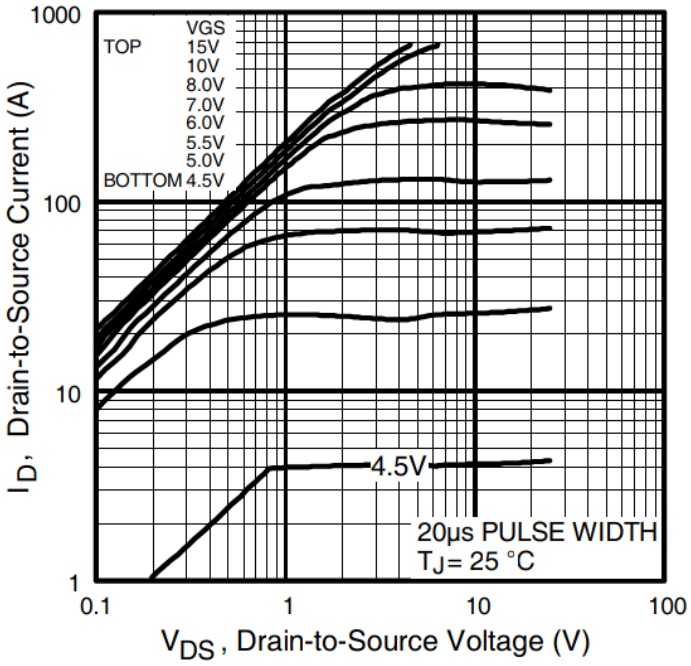

Fig. 1 Typical Output Characteristics

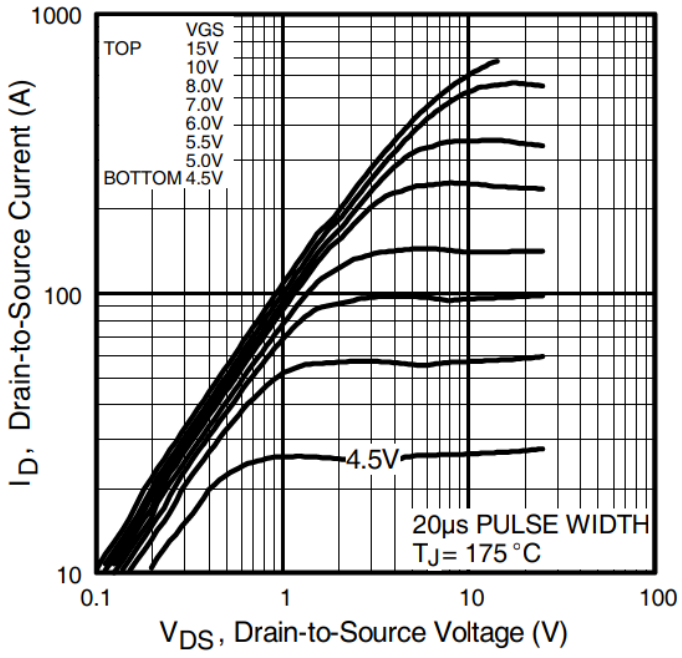

Fig. 2 Typical Output Characteristics

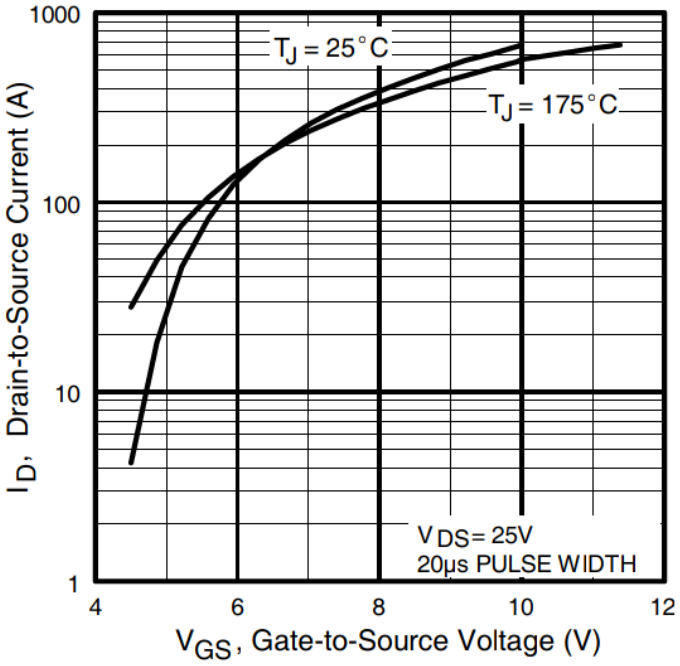

Fig. 3 Typical Transfer Characteristics

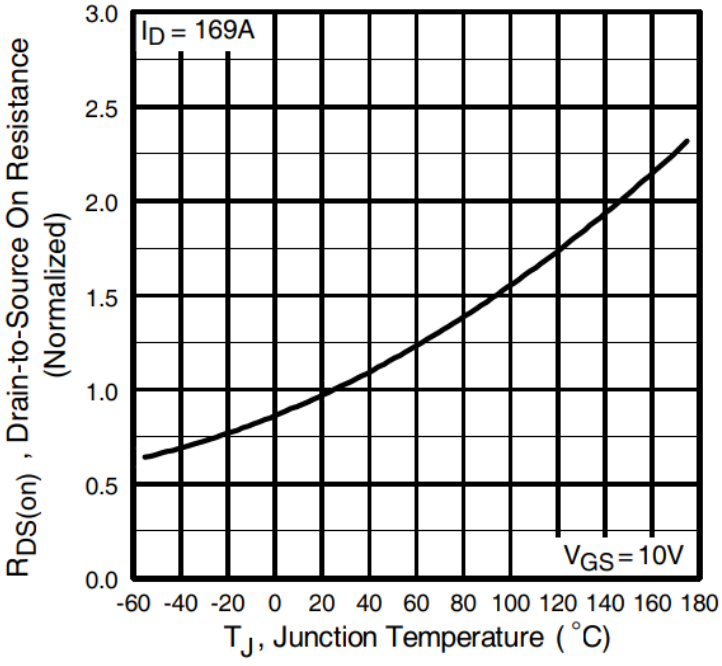

Fig. 4 Normalized On-Resistance vs. Temperature

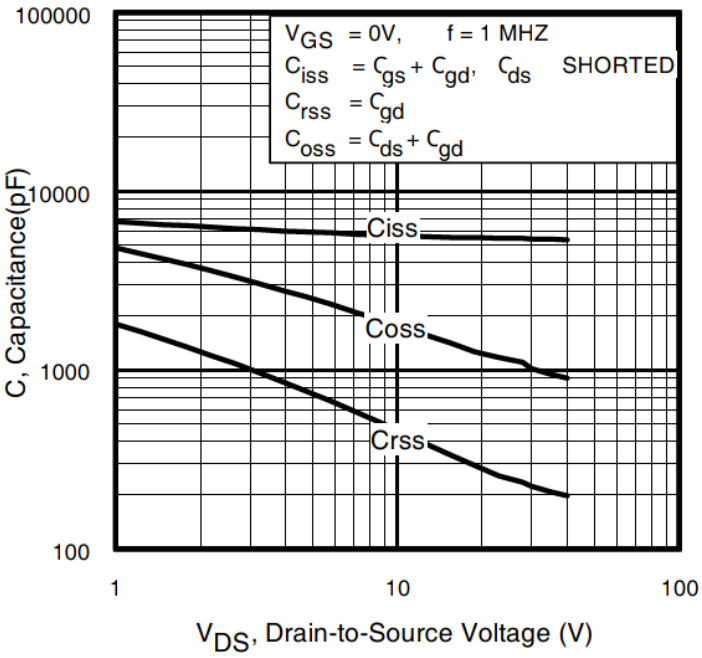

Fig 5. Typical Capacitance vs. Drain-to-Source Voltage

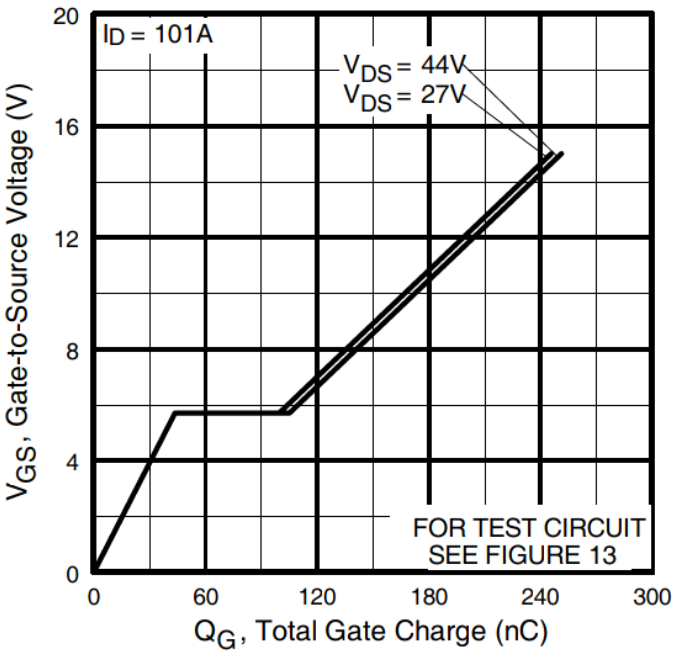

Fig 6. Typical Gate Charge vs. Gate-to-Source Voltage

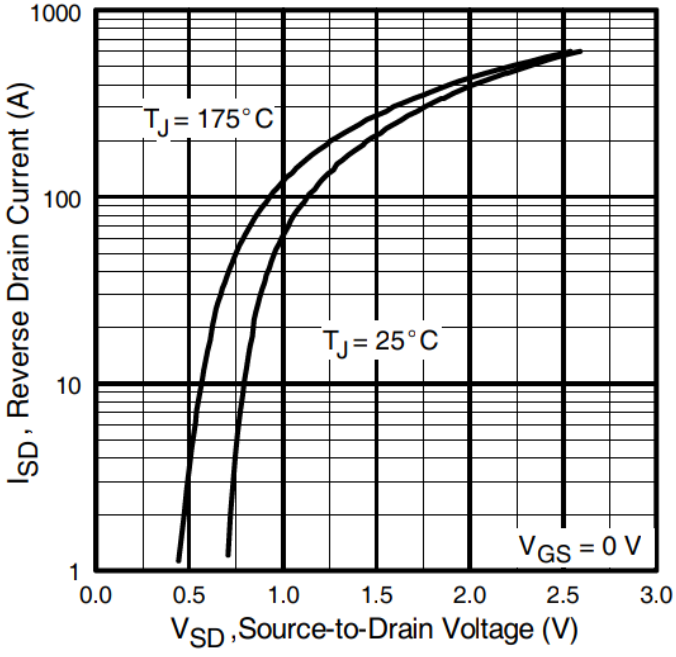

Fig. 7 Typical Source-to-Drain Diode Forward Voltage

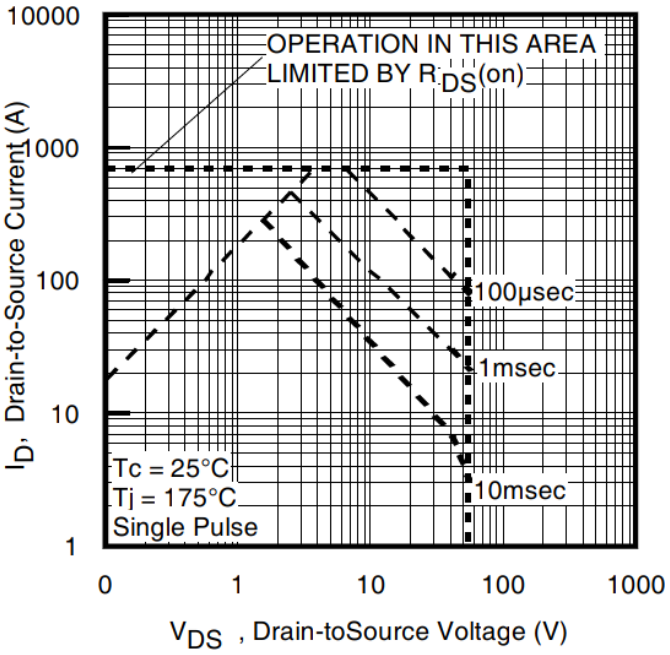

Fig 8. Maximum Safe Operating Area

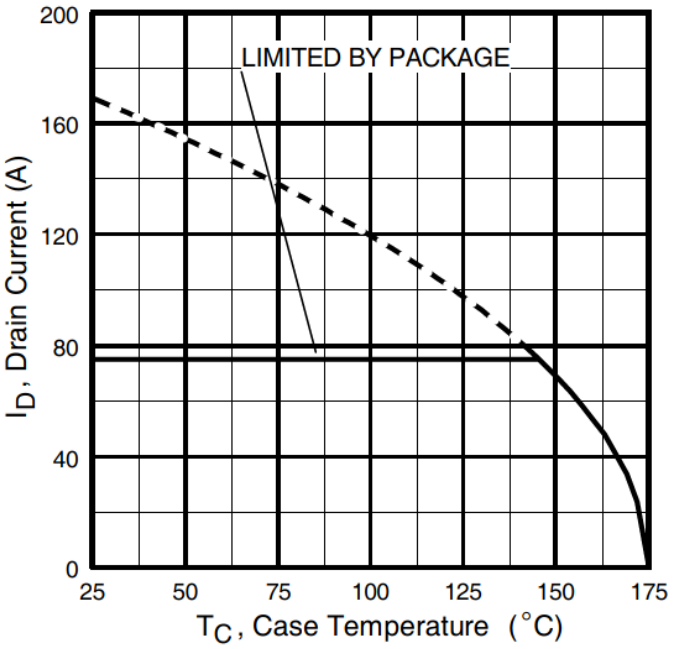

Fig 9. Maximum Drain Current vs. Case Temperature

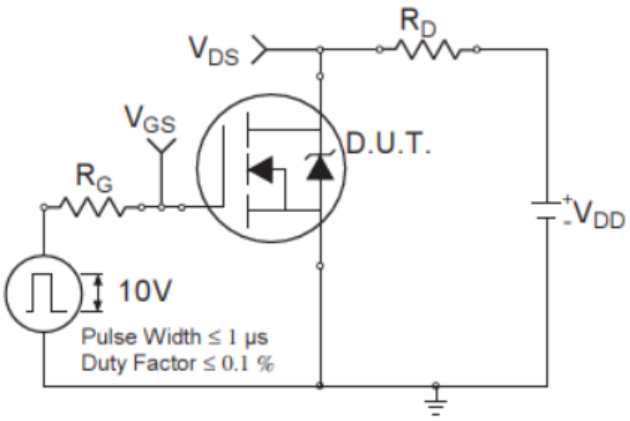

Fig 10b. Switching Time Test Circuit

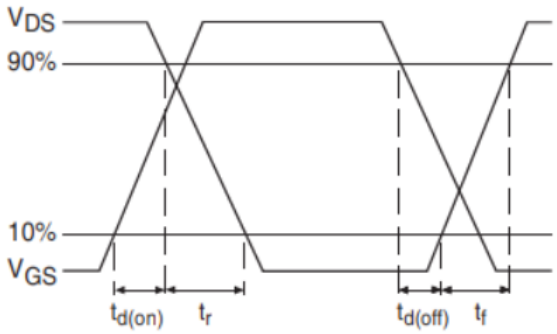

Fig 10b. Switching Time Waveforms

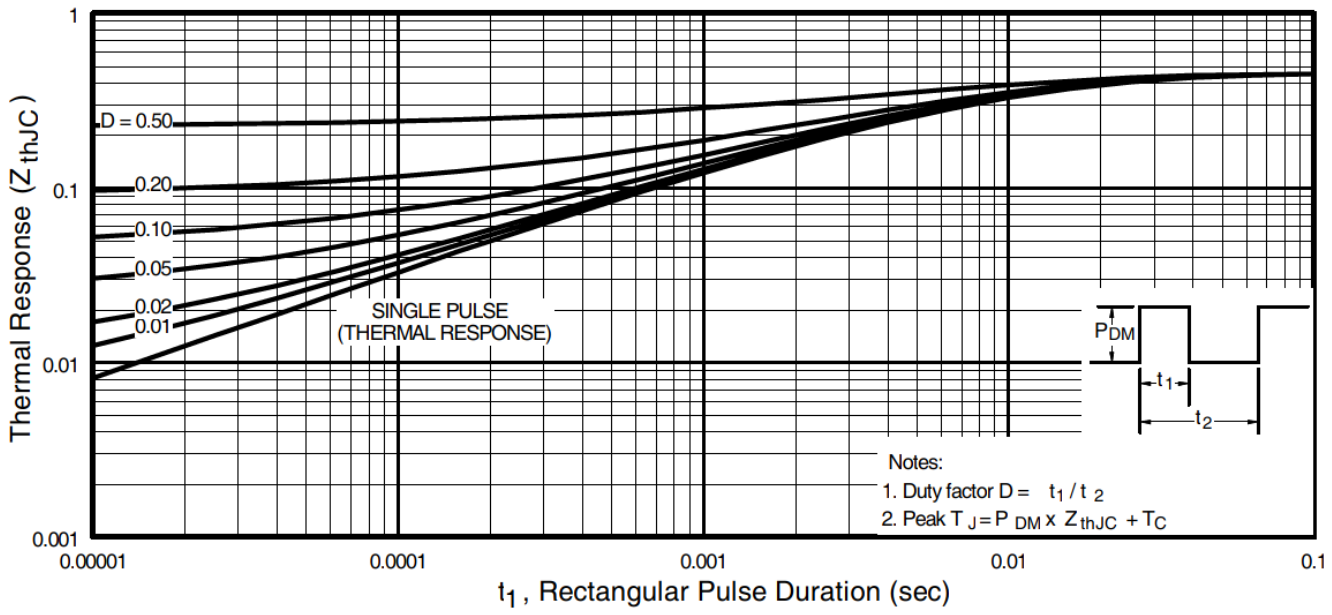

Fig 11. Maximum Effective Transient Thermal Impedance, Junction-to-Case

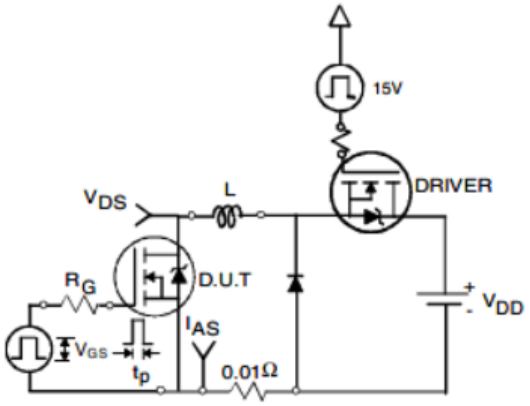

Fig. 12a. Unclamped Inductive Test Circuit

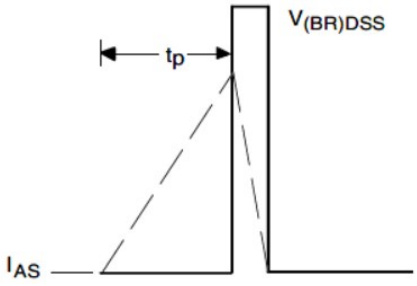

Fig. 12b. Unclamped Inductive Waveforms

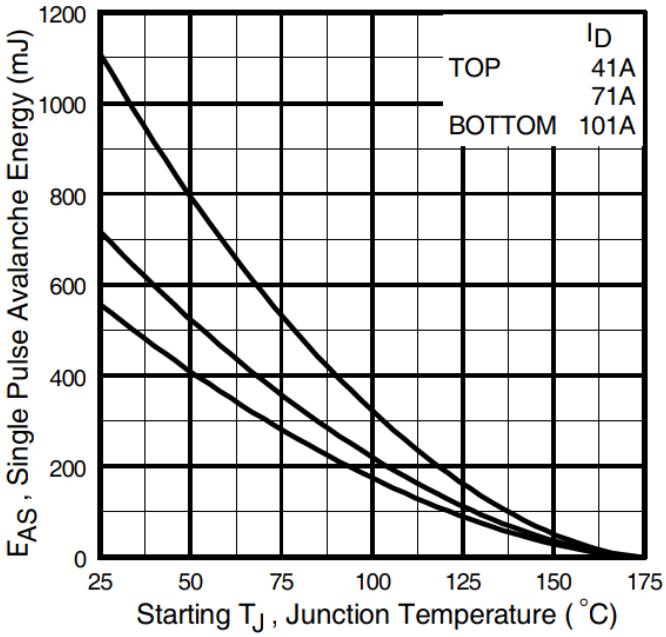

Fig 12c. Maximum Avalanche Energy vs. Drain Current

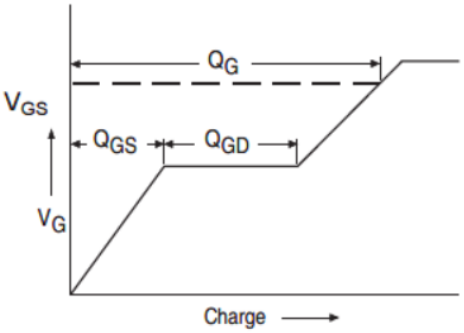

Fig 13a. Basic Gate Charge Waveform

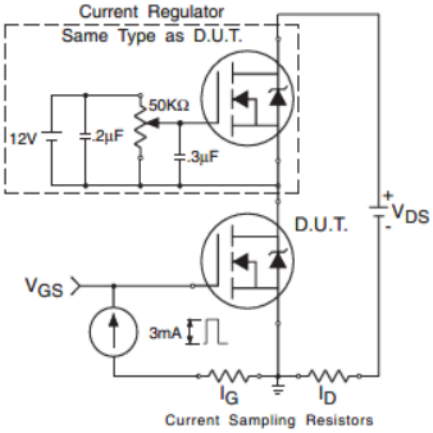

Fig 13b. Gate Charge Test Circuit

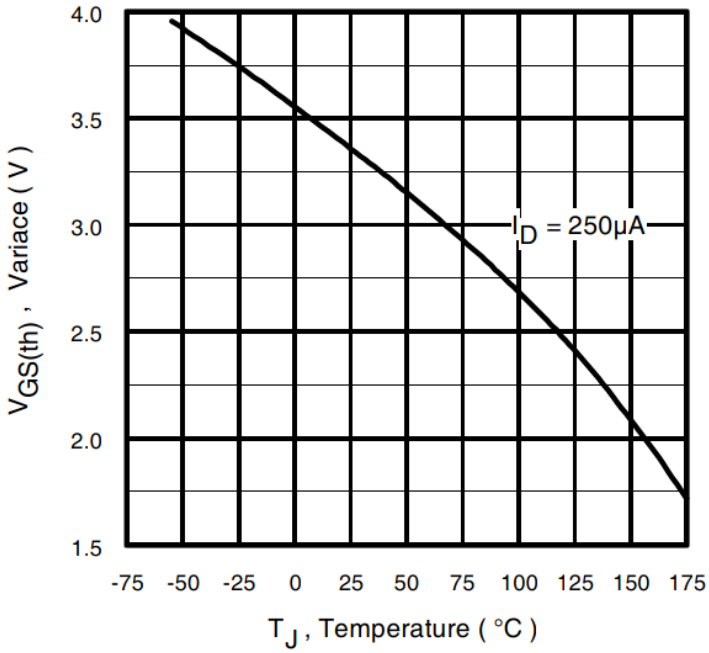

Fig. 14 Threshold Voltage vs. Temperature

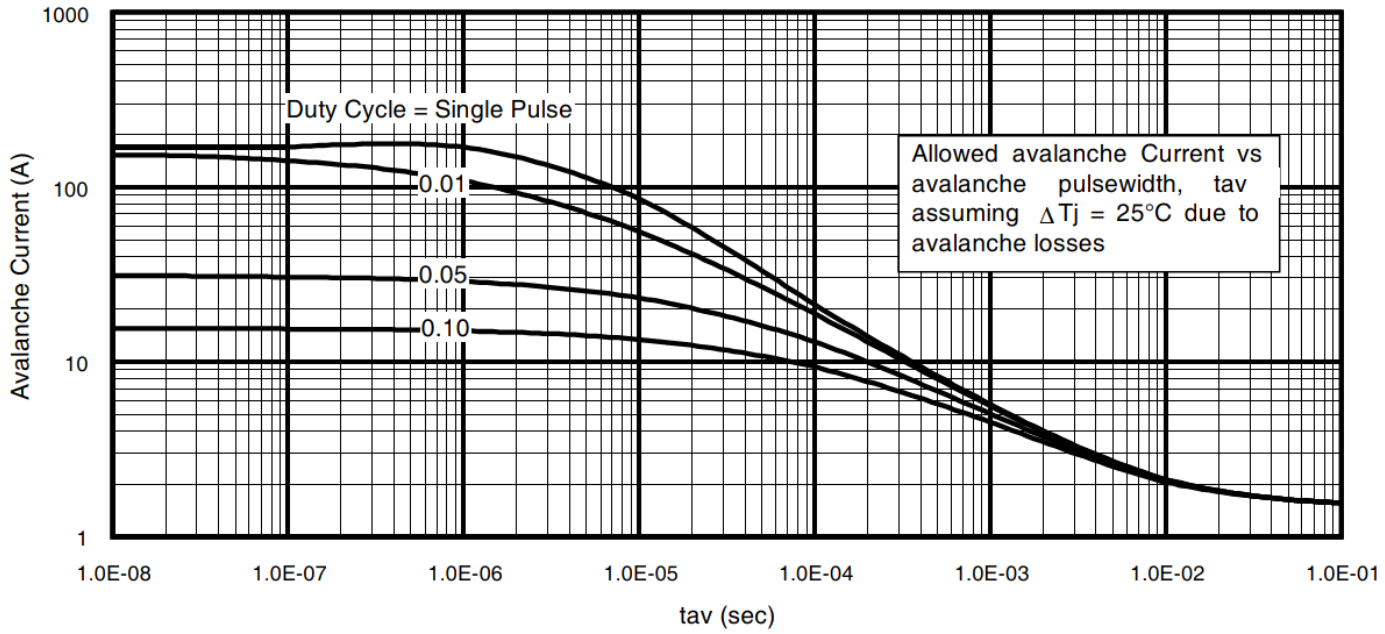

Fig 15. Typical Avalanche Current vs. Pulse Width

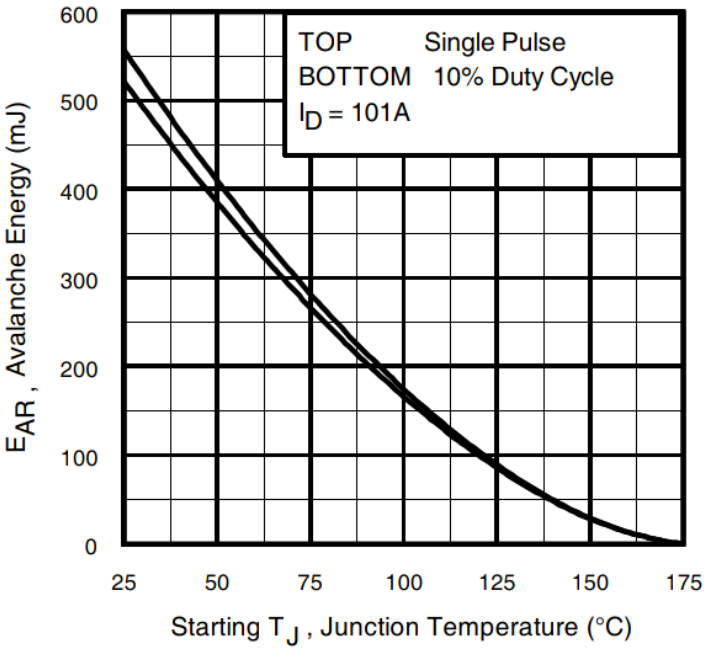

Fig 16. Maximum Avalanche Energy vs. Temperature

Notes on Repetitive Avalanche Curves , Figures 15, 16:
(For further info, see AN-1005 at www.irf.com)

1.Avalanche failures assumption:
Purely a thermal phenomenon and failure occurs at a temperature far in excess of T_{jmax}. This is validated for every part type.

2. Safe operation in Avalanche is allowed as long asT_{jmax} is not exceeded.

3. Equation below based on circuit and waveforms shown in Figures 12a, 12b.

4. $P_{D\ (ave)}$ = Average power dissipation per single avalanche pulse.

5. BV = Rated breakdown voltage (1.3 factor accounts for voltage increase during avalanche).

6. I_{av} = Allowable avalanche current.

7. ΔT = Allowable rise in junction temperature, not to exceed T_{jmax} (assumed as 25°C in Figure 15, 16).

t_{av} = Average time in avalanche.

D = Duty cycle in avalanche = tav ·f

$Z_{thJC}(D, t_{av})$ = Transient thermal resistance, see Figures 14)

$$\mathbf{PD\ (ave) = 1/2\ (1.3 \cdot BV \cdot I_{av}) = \Delta T / Z_{thJC}}$$

$$\mathbf{I_{av} = 2\Delta T / [1.3 \cdot BV \cdot Z_{th}]}$$

$$\mathbf{E_{AS\ (AR)} = P_{D\ (ave)} \cdot t_{av}}$$

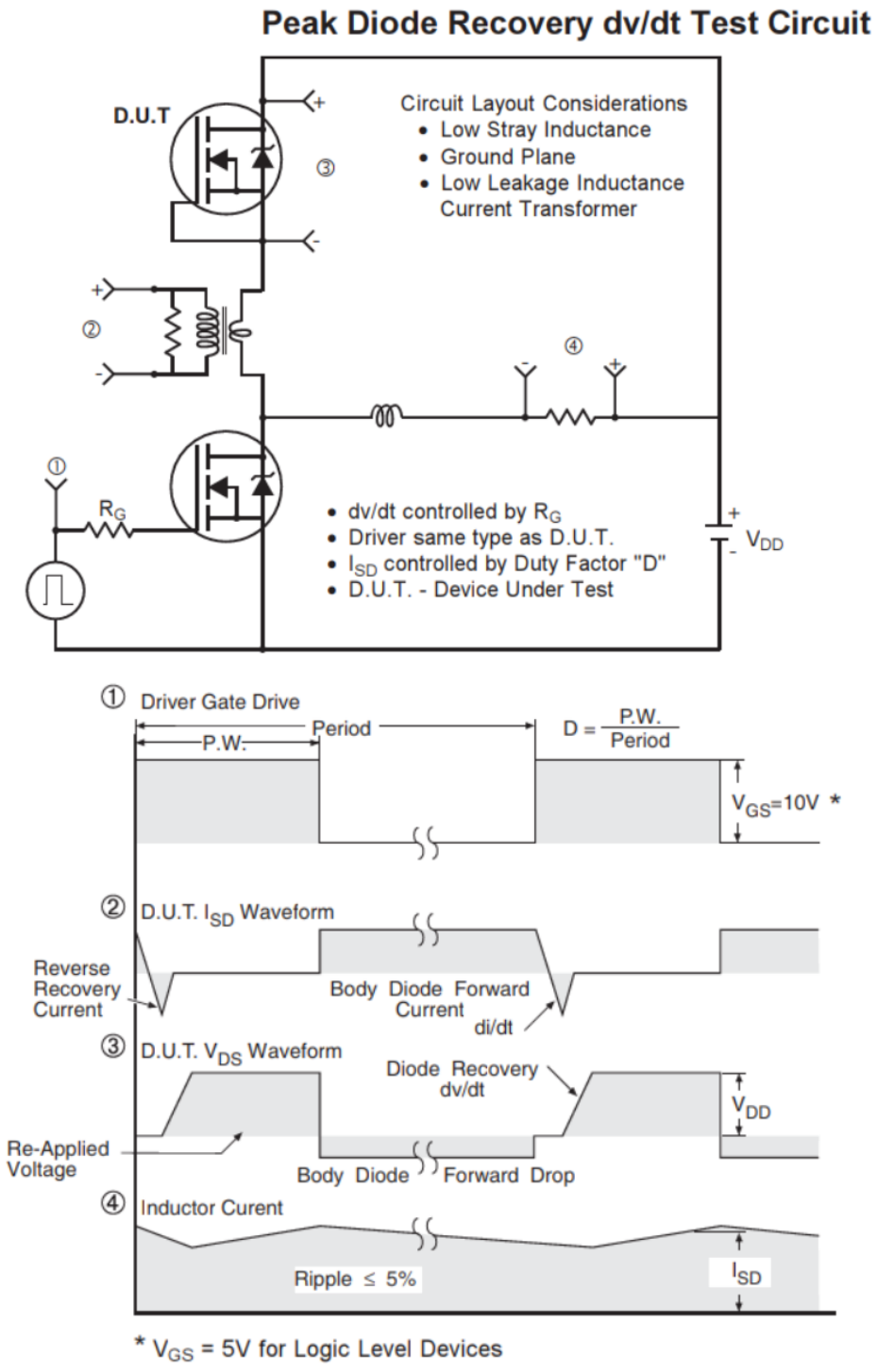

Fig 17. Peak Diode Recovery dv/dt Test Circuit for N-Channel HEXFET® Power MOSFETs

TO-220 Package Outline (Dimensions are shown in millimeters (inches))

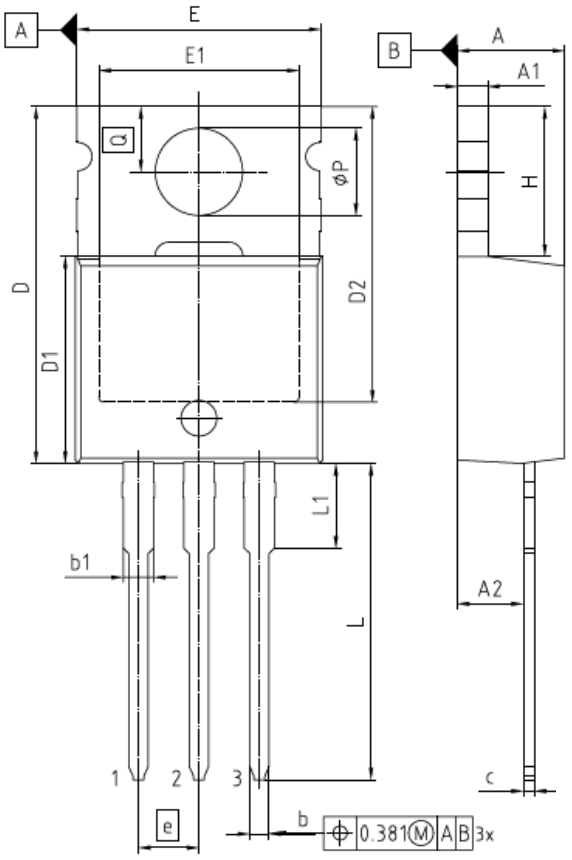

NOTES:
DIMENSIONS DO NOT INCLUDE MOLD FLASH, PROTRUSION OR GATE BURRS
GATE BURRS ARE LESS THAN 0.5 mm

PACKAGE - GROUP NUMBER:	PG-TO220-3-U05	
DIMENSIONS	MILLIMETERS	
	MIN.	MAX.
A	3.56	4.83
A1	1.14	1.40
A2	2.03	2.92
b	0.38	1.01
b1	1.14	1.78
c	0.36	0.61
D	14.22	16.51
D1	8.38	9.20
D2	11.68	12.88
E	9.65	10.67
E1	6.86	8.89
e	2.54	
N	3	
H	5.84	6.86
L	12.70	14.73
L1	3.56	4.06
øP	3.54	4.08
Q	2.54	3.42

TO-220 Part Marking Information

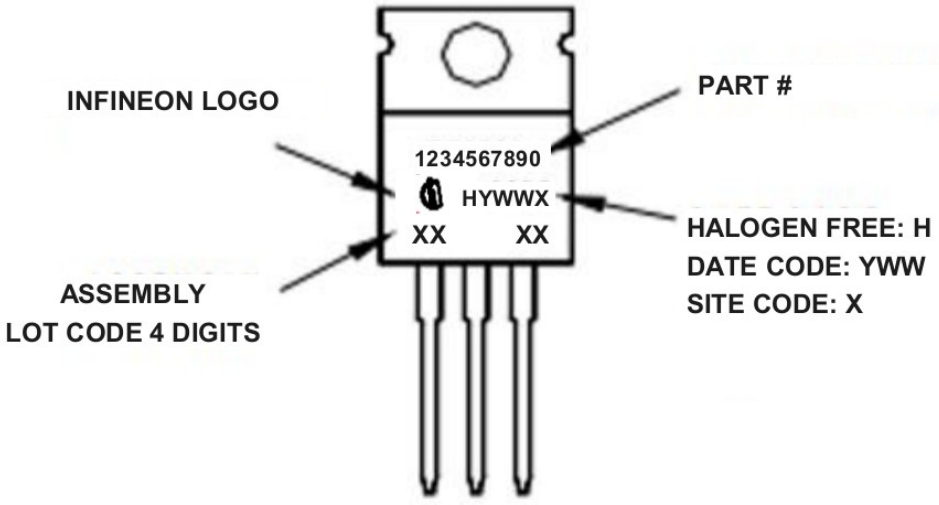

TO-220 packages are not recommended for Surface Mount Application.

Revision History

Date	Rev.	Comments
2026-07-20	2.1	• Update datasheet to Infineon format • Updated Package Outline and Part marking –page 9 • Added disclaimer on last page.

Trademarks

All referenced product or service names and trademarks are the property of their respective owners.

Published by Infineon Technologies AG, Am Campeon 1-15, 85579 Neubiberg, Germany
Copyright (c) 2026 Infineon Technologies AG and its affiliates. All Rights Reserved.

Important notice

The product is not developed and released for series supply by Infineon.

Subject to the development and release of the product for series supply by Infineon, the technical specifications of the product are set forth in the relevant final product data sheet provided by Infineon.

Infineon reserves the right to change all information given in this document at any time without notice.

Products which may also include samples and may be comprised of hardware or software or both (“Product(s)”) are sold or provided and delivered by Infineon Technologies AG and its affiliates (“Infineon”) subject to the terms and conditions of the frame supply contract or other written agreement(s) executed by a customer and Infineon or, in the absence of the foregoing, the applicable Sales Conditions of Infineon. General terms and conditions of a customer or deviations from applicable Sales Conditions of Infineon shall only be binding for Infineon if and to the extent Infineon has given its express written consent.

For the avoidance of doubt, Infineon disclaims all warranties of non-infringement of third-party rights and implied warranties such as warranties of fitness for a specific use/purpose or merchantability.

Infineon shall not be responsible for any information with respect to samples, the application or customer’s specific use of any Product or for any examples or typical values given in this document.

The data contained in this document is exclusively intended for technically qualified and skilled customer representatives. It is the responsibility of the customer to evaluate the suitability of the Product for the intended application and the customer’s specific use and to verify all relevant technical data contained in this document in the intended application and the customer’s specific use. The customer is responsible for properly designing, programming, and testing the functionality and safety of the intended application, as well as complying with any legal requirements related to its use.

Unless otherwise explicitly approved by Infineon, Products may not be used in any application where a failure of the Products or any consequences of the use thereof can reasonably be expected to result in personal injury. However, the foregoing shall not

prevent the customer from using any Product in such fields of use that Infineon has explicitly designed and sold it for, provided that the overall responsibility for the application lies with the customer.

Infineon expressly reserves the right to use its content for commercial text and data mining (TDM) according to applicable laws, e.g. Section 44b of the German Copyright Act (UrhG).

If the Product includes security features: Because no computing device can be absolutely secure, and despite security measures implemented in the Product, Infineon does not guarantee that the Product will be free from intrusion, data theft or loss, or other breaches (“Security Breaches”), and Infineon shall have no liability arising out of any Security Breaches.

If this document includes or references software:

The software is owned by Infineon under the intellectual property laws and treaties of the United States, Germany, and other countries worldwide. All rights reserved. Therefore, you may use the software only as provided in the software license agreement accompanying the software. If no software license agreement applies, Infineon hereby grants you a personal, non-exclusive, non-transferable license (without the right to sublicense) under its intellectual property rights in the software (a) for software provided in source code form, to modify and reproduce the software solely for use with Infineon hardware products, only internally within your organization, and (b) to distribute the software in binary code form externally to end users, solely for use on Infineon hardware products. Any other use, reproduction, modification, translation, or compilation of the software is prohibited.

For further information on the Product, technology, delivery terms and conditions, and prices, please contact your nearest Infineon office or visit https://www.infineon.com.

ENTEGRECİ

Bu belge www.entegreci.com üzerinden sunulmaktadır.

Elektronik komponent tedarikinde Entegreci

Entegreci, Eskişehir merkezli, Türkiye geneline satış yapan bir elektronik komponent mağazasıdır. Entegreler (IC), mikrodenetleyiciler, transistörler, diyotlar, pasif elemanlar, konnektörler, modüller ve geliştirme kartları tek adetten seri üretim adetlerine kadar satılır. Ürün sayfalarında güncel stok durumunu, fiyatı ve datasheet bağlantısını bulabilirsiniz.

Parça koduyla arama

Üretici parça numarasını yazın; stok ve fiyatı hemen görün.

www.entegreci.com

Ürün kategorileri

Entegreden kapasitöre tüm elektronik komponent kategorileri.

Kategorilere göz atın

Üreticiler

Aradığınız üreticinin ürünlerini tek sayfada inceleyin.

Üreticileri görün

Toplu alım ve teklif

Listede olmayan ya da yüksek adetli parçalar için teklif isteyin.

Teklif isteyin

www.entegreci.com | **destek@entegreci.com** | **0850 305 90 34**

Entegreci is an online electronic components store based in Türkiye. Search by manufacturer part number to see stock, prices and datasheets for integrated circuits, microcontrollers, transistors, passive components and connectors, or request a quote for parts that are not listed.

Bu sayfa Entegreci tarafından eklenmiştir. Belgenin önceki sayfaları asıl yayıncısına aittir ve içeriği değiştirilmemiştir; en güncel sürüm için belgenin yayıncısına başvurun.