MOSFET

Metal Oxide Semiconductor Field Effect Transistor

CoolMOS™ C6 600V

600V CoolMOS™ C6 Power Transistor
IPx60R190C6

Data Sheet

Rev. 2.3
Final

Power Management & Multimarket

1 Description

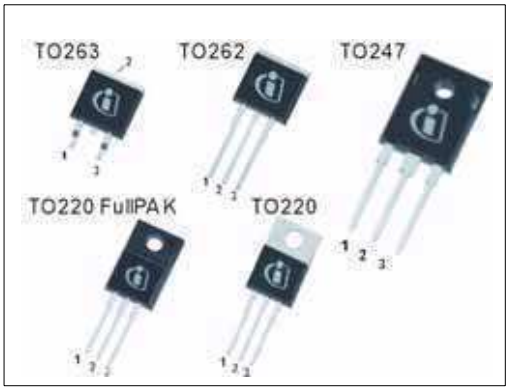

CoolMOS™ is a revolutionary technology for high voltage power MOSFETs, designed according to the superjunction (SJ) principle and pioneered by Infineon Technologies. CoolMOS™ C6 series combines the experience of the leading SJ MOSFET supplier with high class innovation. The offered devices provide all benefits of a fast switching SJ MOSFET while not sacrificing ease of use. Extremely low switching and conduction losses make switching applications even more efficient, more compact, lighter, and cooler.

Features

- Extremely low losses due to very low FOM R_{dson}*Q_g and E_{oss}
- Very high commutation ruggedness
- Easy to use/drive
- JEDEC[1)] qualified, Pb-free plating, Halogen free

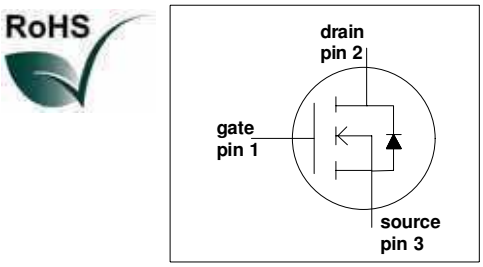

Applications

PFC stages, hard switching PWM stages and resonant switching PWM stages for e.g. PC Silverbox, Adapter, LCD & PDP TV, Lighting, Server, Telecom and UPS.

Please note: For MOSFET paralleling the use of ferrite beads on the gate or separate totem poles is generally recommended.

Table 1 Key Performance Parameters

Parameter	Value	Unit
V_{DS} @ $T_{j,max}$	650	V
$R_{DS(on),max}$	0.19	Ω
$Q_{g,typ}$	63	nC
$I_{D,pulse}$	59	A
E_{oss} @ 400V	5.2	µJ
Body diode di/dt	500	A/µs

Type / Ordering Code	Package	Marking	Related Links
IPW60R190C6	PG-TO247	6R190C6	IFX C6 Product Brief
IPB60R190C6	PG-TO263		IFX C6 Portfolio
IPI60R190C6	PG-TO262		IFX CoolMOS Webpage
IPP60R190C6	PG-TO220		IFX Design tools
IPA60R190C6	PG-TO220 FullPAK		

1) J-STD20 and JESD22

Table of Contents

1 Description 2
Table of Contents 3
2 Maximum ratings 4
3 Thermal characteristics 5
4 Electrical characteristics 6
5 Electrical characteristics diagrams 8
6 Test circuits 13
7 Package outlines 14
8 Revision History 19

2 Maximum ratings

at T_j = 25 °C, unless otherwise specified.

Table 2 Maximum ratings

Parameter	Symbol	Values			Unit	Note / Test Condition
		Min.	Typ.	Max.		
Continuous drain current[1]	I_D	-	-	20.2	A	T_C= 25 °C
				12.8		T_C= 100°C
Pulsed drain current[2]	$I_{D,pulse}$	-	-	59	A	T_C=25 °C
Avalanche energy, single pulse	E_{AS}	-	-	418	mJ	I_D=3.4 A, V_{DD}=50 V (see table 21)
Avalanche energy, repetitive	E_{AR}	-	-	0.63		I_D=3.4 A, V_{DD}=50 V
Avalanche current, repetitive	I_{AR}	-	-	3.4	A	
MOSFET dv/dt ruggedness	dv/dt	-	-	50	V/ns	V_{DS}=0...480 V
Gate source voltage	V_{GS}	- 20	-	20	V	static
		- 30		30		AC (f>1 Hz)
Power dissipation for TO-220, TO-247, TO-262, TO-263	P_{tot}	-	-	151	W	T_C=25 °C
Power dissipation for TO-220 FullPAK	P_{tot}	-	-	34		
Operating and storage temperature	T_j, T_{stg}	- 55	-	150	°C	
Mounting torque TO-220, TO-247		-	-	60	Ncm	M3 and M3.5 screws
Mounting torque TO-220 FullPAK				50		M2.5 screws
Continuous diode forward current	I_S	-	-	17.5	A	T_C=25 °C
Diode pulse current[2]	$I_{S,pulse}$	-	-	59	A	T_C=25 °C
Reverse diode dv/dt[3]	dv/dt	-	-	15	V/ns	V_{DS}=0...400 V, I_{SD}~ I_D, T_j=25 °C (see table 22)
Maximum diode commutation speed[3]	di_f/dt	-	-	500	A/µs	
Insulation withstand voltage TO-220 FullPAK	V_{ISO}	-	-	2500	V	V_{RMS}, T_C=25 °C, t= 1 min

1) Limited by $T_{j,max}$. Maximum duty cycle D=0.75
2) Pulse width t_p limited by $T_{j,max}$
3) Identical low side and high side switch with identical R_G

3 Thermal characteristics

Table 3 Thermal characteristics TO-220 (IPP60R190C6),TO-247 (IPW60R190C6),TO-262 (IPI60R190C6)

Parameter	Symbol	Values			Unit	Note / Test Condition
		Min.	Typ.	Max.		
Thermal resistance, junction - case	R_{thJC}	-	-	0.83	°C/W	
Thermal resistance, junction - ambient	R_{thJA}	-	-	62		leaded
Soldering temperature, wavesoldering only allowed at leads	T_{sold}	-	-	260	°C	1.6 mm (0.063 in.) from case for 10 s

Table 4 Thermal characteristics TO-220 FullPAK (IPA60R190C6)

Parameter	Symbol	Values			Unit	Note / Test Condition
		Min.	Typ.	Max.		
Thermal resistance, junction - case	R_{thJC}	-	-	3.7	°C/W	
Thermal resistance, junction - ambient	R_{thJA}	-	-	80		leaded
Soldering temperature, wavesoldering only allowed at leads	T_{sold}	-	-	260	°C	1.6 mm (0.063 in.) from case for 10 s

Table 5 Thermal characteristics TO-263 (IPB60R190C6)

Parameter	Symbol	Values			Unit	Note / Test Condition
		Min.	Typ.	Max.		
Thermal resistance, junction - case	R_{thJC}	-	-	0.83	°C/W	
Thermal resistance, junction - ambient	R_{thJA}	-	-	62		SMD version, device on PCB, minimal footprint
			35			SMD version, device on PCB, 6cm^2 cooling area[1)]
Soldering temperature, wave- & reflow soldering allowed	T_{sold}	-	-	260	°C	reflow MSL1

1) Device on 40mm*40mm*1.5mm one layer epoxy PCB FR4 with 6cm^2 copper area (thickness 70µm) for drain connection. PCB is vertical without air stream cooling.

4 Electrical characteristics

Electrical characteristics, at T_j=25 °C, unless otherwise specified.

Table 6 Static characteristics

Parameter	Symbol	Values			Unit	Note / Test Condition
		Min.	Typ.	Max.		
Drain-source breakdown voltage	$V_{(BR)DSS}$	600	-	-	V	V_{GS}=0 V, I_D=0.25 mA
Gate threshold voltage	$V_{GS(th)}$	2.5	3	3.5		V_{DS}=V_{GS}, I_D=0.63mA
Zero gate voltage drain current	I_{DSS}	-	-	1	µA	V_{DS}=600 V, V_{GS}=0 V, T_j=25 °C
		-	10	-		V_{DS}=600 V, V_{GS}=0 V, T_j=150 °C
Gate-source leakage current	I_{GSS}	-	-	100	nA	V_{GS}=20 V, V_{DS}=0 V
Drain-source on-state resistance	$R_{DS(on)}$	-	0.17	0.19	Ω	V_{GS}=10 V, I_D=9.5 A, T_j=25 °C
		-	0.44	-		V_{GS}=10 V, I_D=9.5 A, T_j=150 °C
Gate resistance	R_G	-	8.5	-	Ω	f=1 MHz, open drain

Table 7 Dynamic characteristics

Parameter	Symbol	Values			Unit	Note / Test Condition
		Min.	Typ.	Max.		
Input capacitance	C_{iss}	-	1400	-	pF	V_{GS}=0 V, V_{DS}=100 V, f=1 MHz
Output capacitance	C_{oss}	-	85	-		
Effective output capacitance, energy related[1)]	$C_{o(er)}$	-	56	-		V_{GS}=0 V, V_{DS}=0...480 V
Effective output capacitance, time related[2)]	$C_{o(tr)}$	-	266	-		I_D=constant, V_{GS}=0 V V_{DS}=0...480V
Turn-on delay time	$t_{d(on)}$	-	15	-	ns	V_{DD}=400 V, V_{GS}=13 V, I_D=9.5A, R_G= 3.4Ω (see table 20)
Rise time	t_r	-	11	-		
Turn-off delay time	$t_{d(off)}$	-	110	-		
Fall time	t_f	-	9	-		

1) $C_{o(er)}$ is a fixed capacitance that gives the same stored energy as C_{oss} while V_{DS} is rising from 0 to 80% $V_{(BR)DSS}$

2) $C_{o(tr)}$ is a fixed capacitance that gives the same charging time as C_{oss} while V_{DS} is rising from 0 to 80% $V_{(BR)DSS}$

Table 8 Gate charge characteristics

Parameter	Symbol	Values			Unit	Note / Test Condition
		Min.	Typ.	Max.		
Gate to source charge	Q_{gs}	-	7.6	-	nC	V_{DD}=480 V, I_D=9.5A, V_{GS}=0 to 10 V
Gate to drain charge	Q_{gd}	-	32	-		
Gate charge total	Q_g	-	63	-		
Gate plateau voltage	$V_{plateau}$	-	5.4	-	V	

Table 9 Reverse diode characteristics

Parameter	Symbol	Values			Unit	Note / Test Condition
		Min.	Typ.	Max.		
Diode forward voltage	V_{SD}	-	0.9	-	V	V_{GS}=0 V, I_F=9.5A, T_j=25 °C
Reverse recovery time	t_{rr}	-	430	-	ns	V_R=400 V, I_F=9.5A, di_F/dt=100 A/µs (see table 22)
Reverse recovery charge	Q_{rr}	-	6.9	-	µC	
Peak reverse recovery current	I_{rrm}	-	30	-	A	

5 Electrical characteristics diagrams

Table 10

Power dissipation TO-220, TO-247, TO-262, TO-263	Power dissipation TO-220 FullPAK
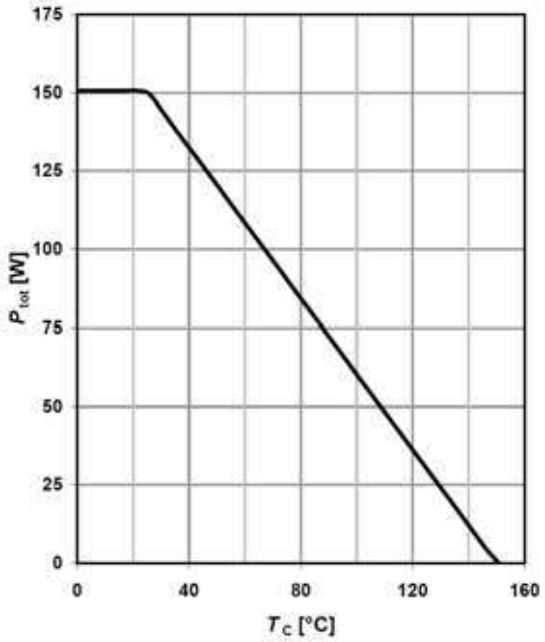	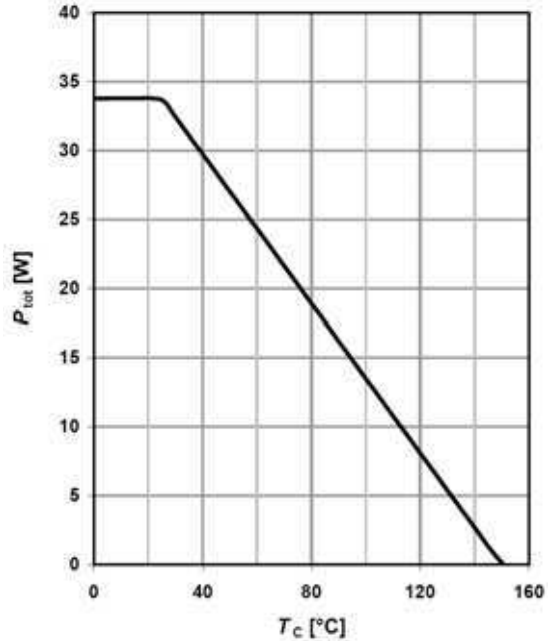
$P_{tot} = f(T_C)$	$P_{tot} = f(T_C)$

Table 11

Max. transient thermal impedance TO-220, TO-247, TO-262, TO-263	Max. transient thermal impedance TO-220 FullPAK
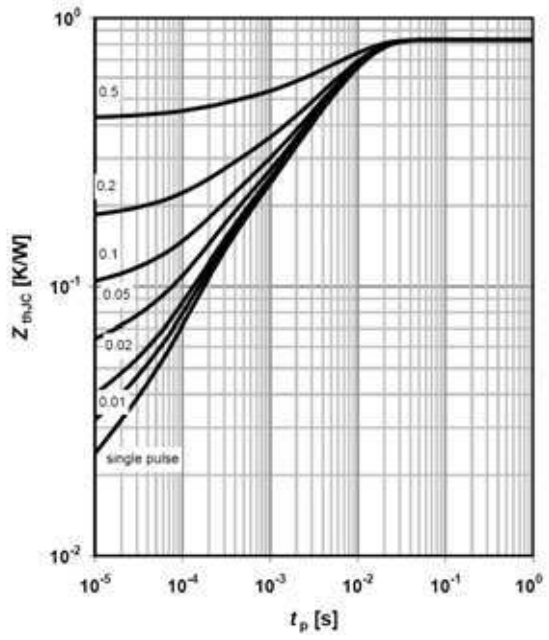	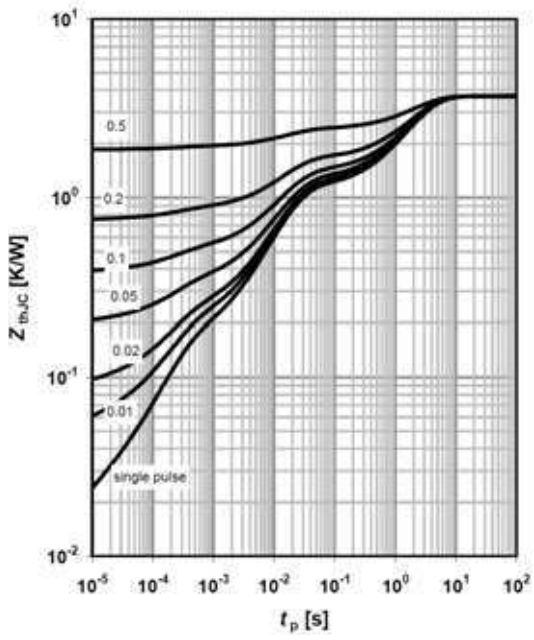
$Z_{(thJC)}$=f(tp); parameter: D=t_p/T	$Z_{(thJC)}$=f(tp); parameter: D=t_p/T

Table 12

Safe operating area T_C=25 °C TO-220, TO-247, TO-262, TO-263	Safe operating area T_C=25 °C TO-220 FullPAK
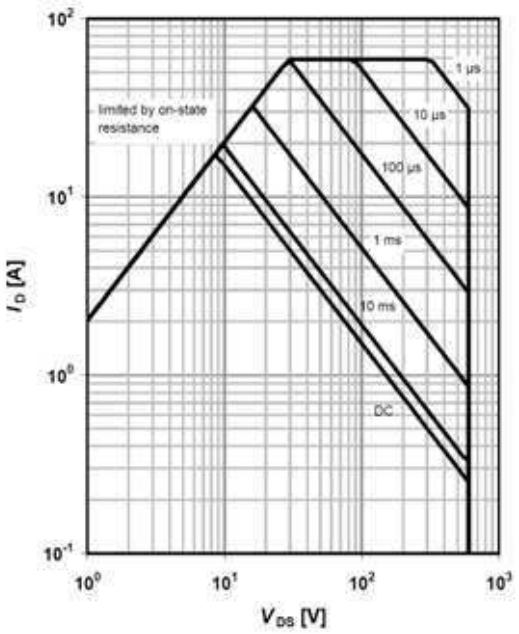	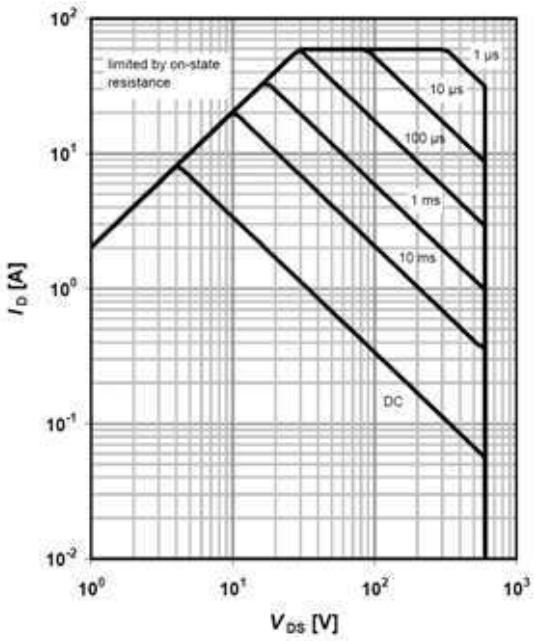
I_D=f(V_{DS}); T_C=25 °C; D=0; parameter t_p	I_D=f(V_{DS}); T_C=25 °C; D=0; parameter t_p

Table 13

Safe operating area T_C=80 °C TO-220, TO-247, TO-262, TO-263	Safe operating area T_C=80 °C TO-220 FullPAK
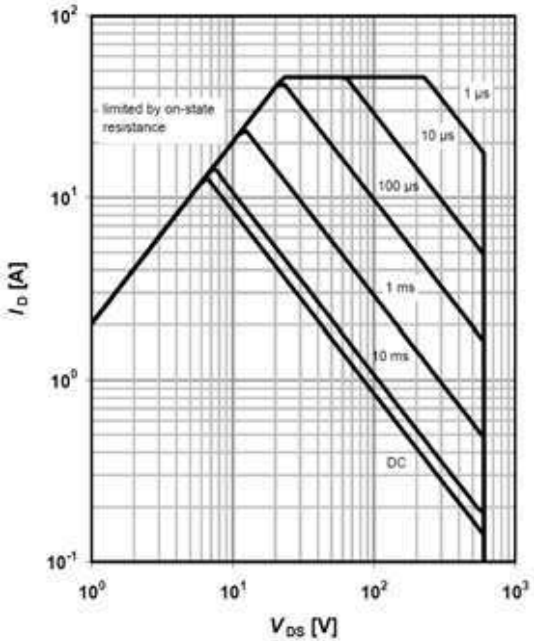	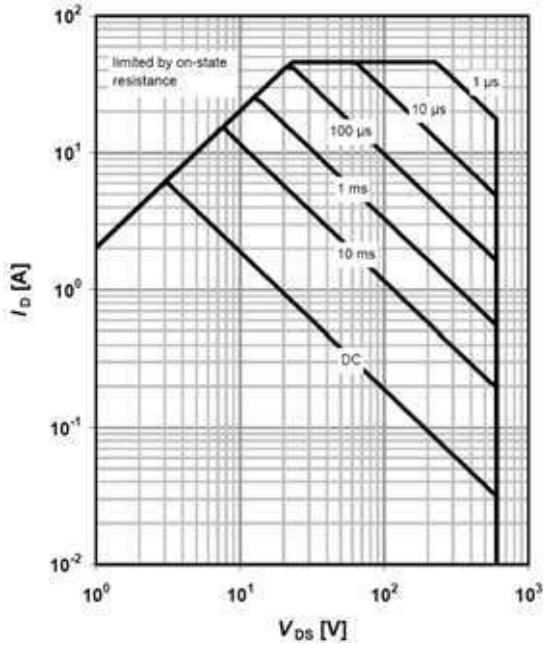
I_D=f(V_{DS}); T_C=80 °C; D=0; parameter t_p	I_D=f(V_{DS}); T_C=80 °C; D=0; parameter t_p

Table 14

Typ. output characteristics T_C=25 °C	Typ. output characteristics T_j=125 °C
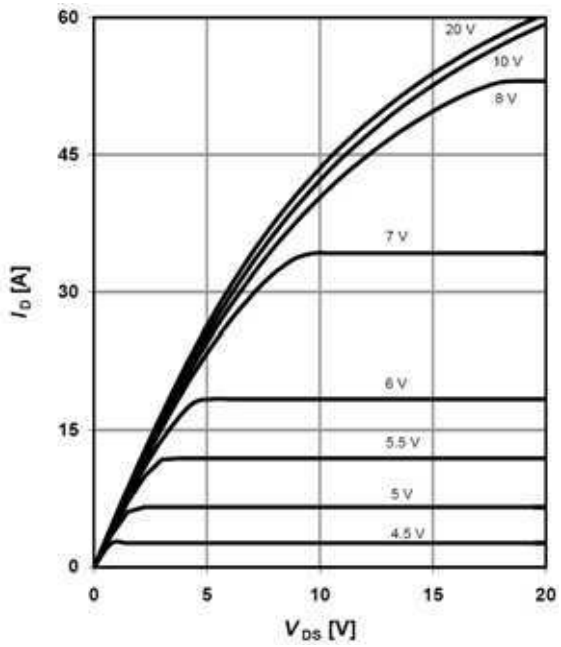	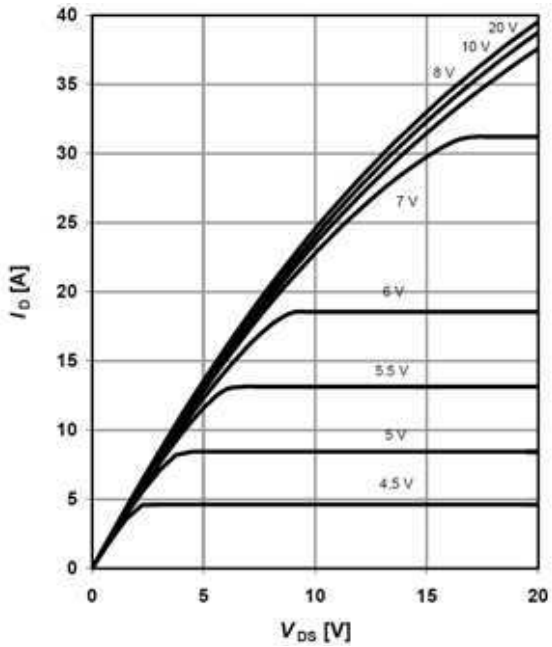
I_D=f(V_{DS}); T_j=25 °C; parameter: V_{GS}	I_D=f(V_{DS}); T_j=125 °C; parameter: V_{GS}

Table 15

Typ. drain-source on-state resistance	Drain-source on-state resistance
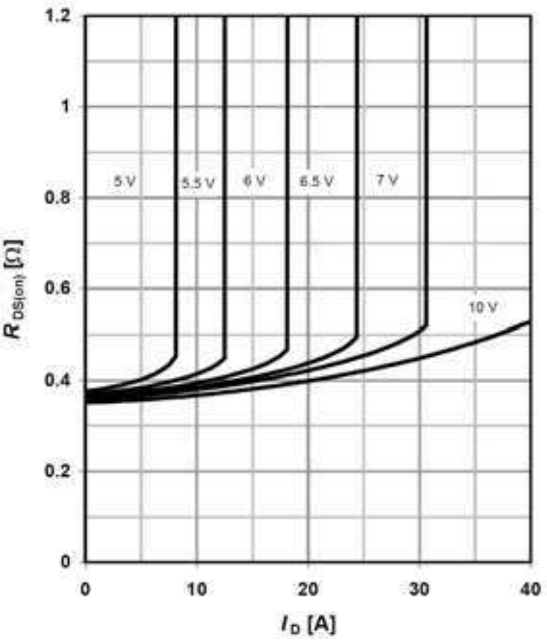	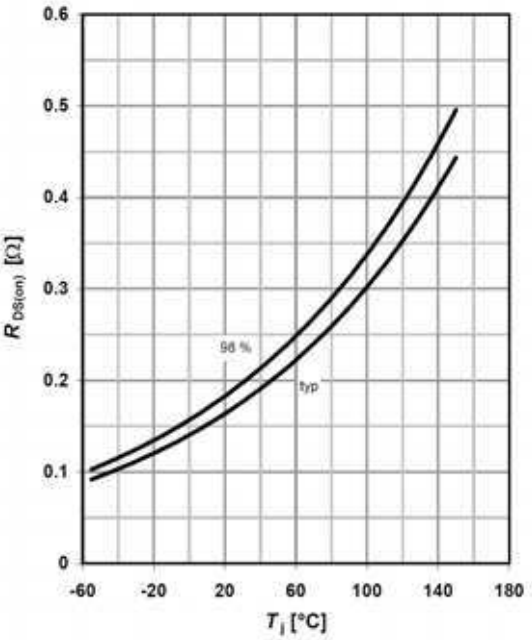
$R_{DS(on)}$=f(I_D); T_j=125 °C; parameter: V_{GS}	$R_{DS(on)}$=f(T_j); I_D=9.5 A; V_{GS}=10 V

Table 16

Typ. transfer characteristics	Typ. gate charge
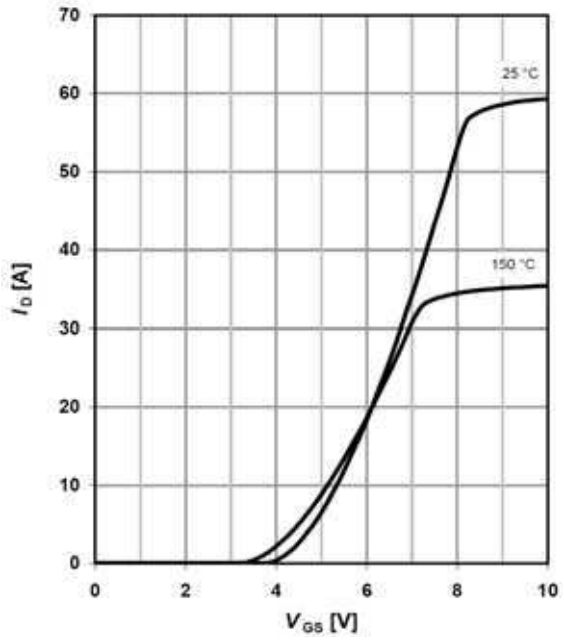	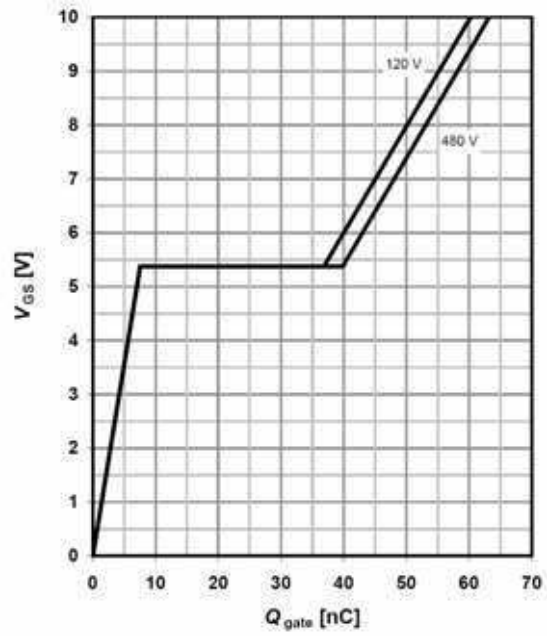
I_D=f(V_{GS}); V_{DS}=20V	V_{GS}=f(Q_{gate}), I_D=9.5A pulsed

Table 17

Avalanche energy	Drain-source breakdown voltage
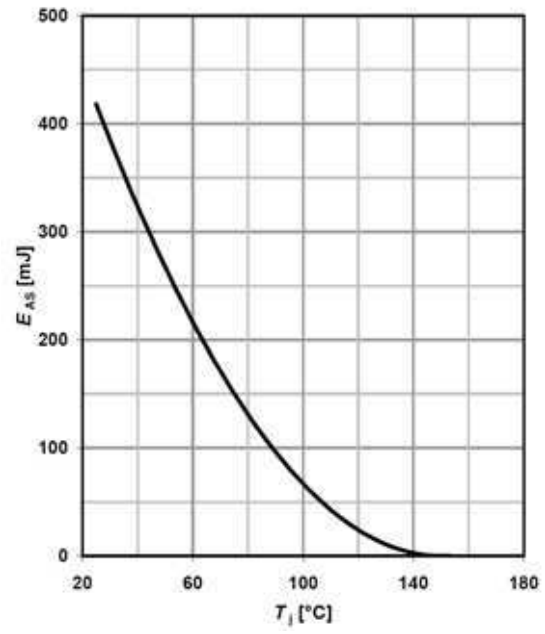	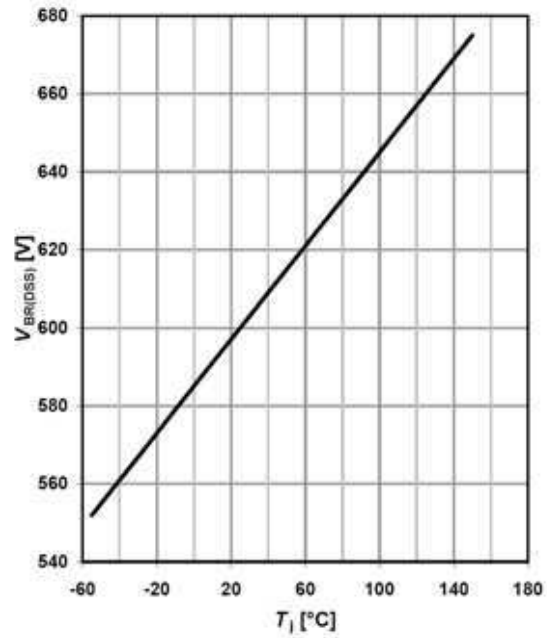
E_{AS}=f(T_j); I_D=3.4 A; V_{DD}=50 V	$V_{BR(DSS)}$=f(T_j); I_D=0.25 mA

Table 18

Typ. capacitances	Typ. C_{oss} stored energy
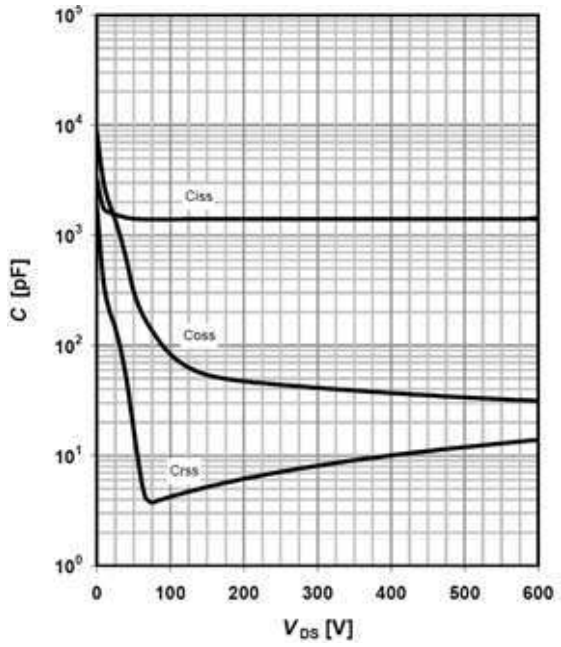	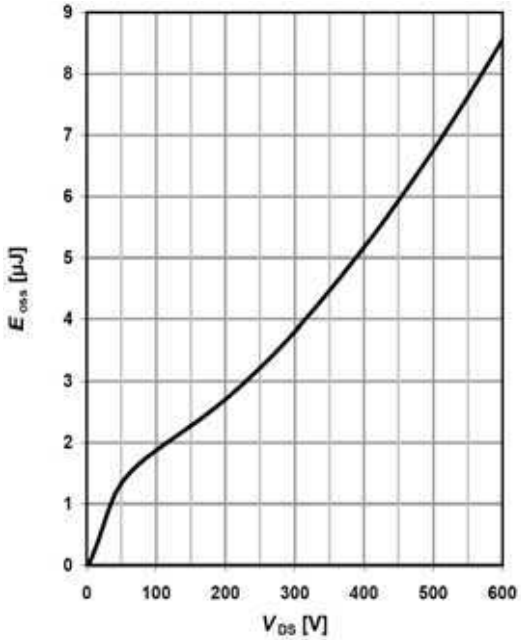
C=f(V_{DS}); V_{GS}=0 V; f=1 MHz	E_{oss}=f(V_{DS})

Table 19

Forward characteristics of reverse diode
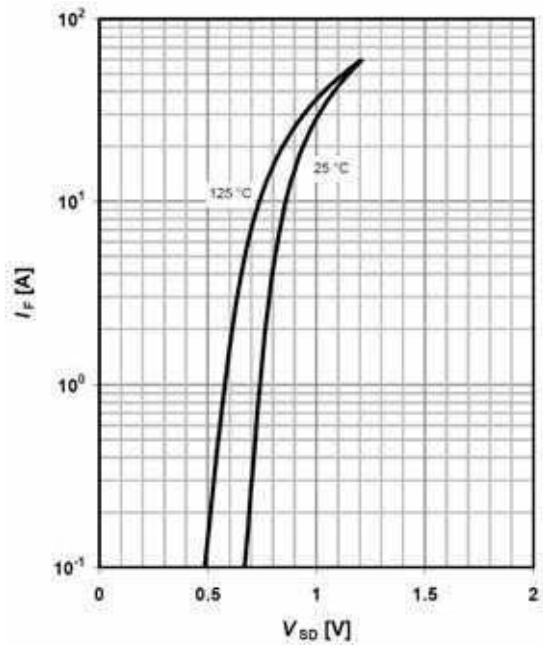
I_F=f(V_{SD}); parameter: T_j

6 Test circuits

Table 20 Switching times test circuit and waveform for inductive load

Switching times test circuit for inductive load	Switching time waveform
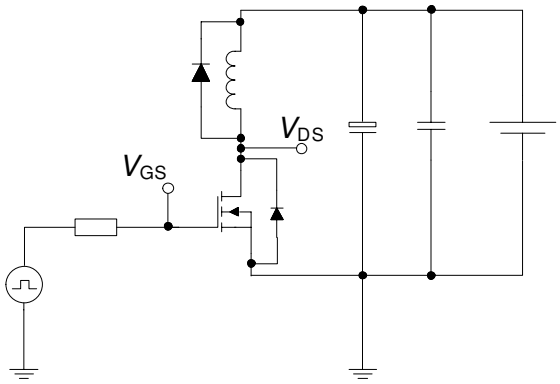	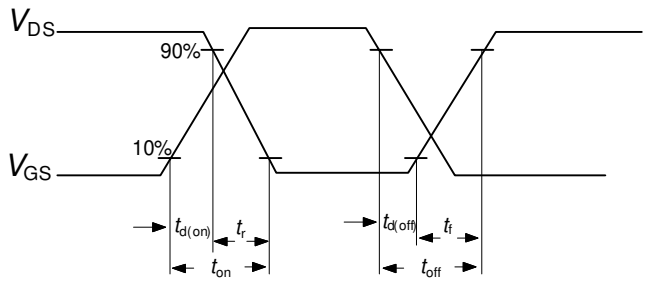

Table 21 Unclamped inductive load test circuit and waveform

Unclamped inductive load test circuit	Unclamped inductive waveform
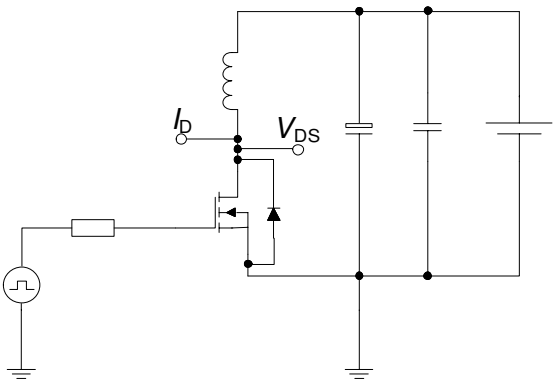	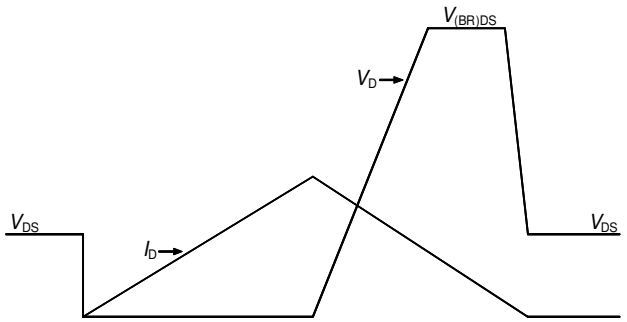

Table 22 Test circuit and waveform for diode characteristics

Test circuit for diode characteristics	Diode recovery waveform
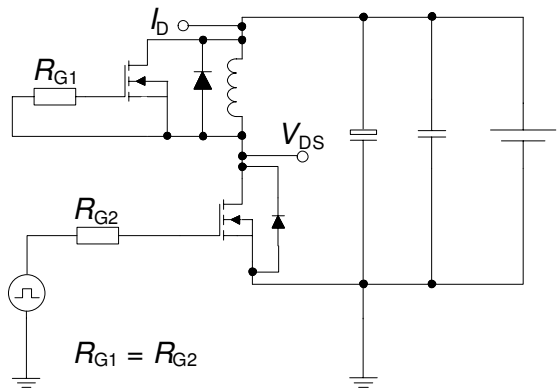	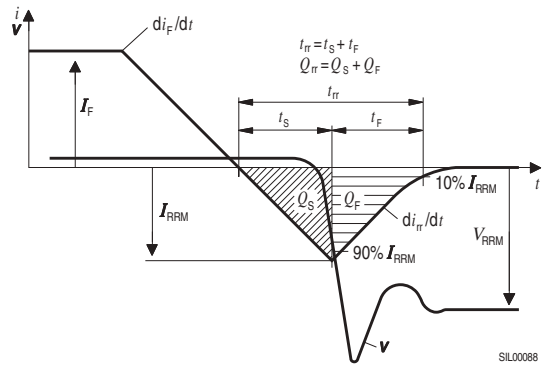

7 Package outlines

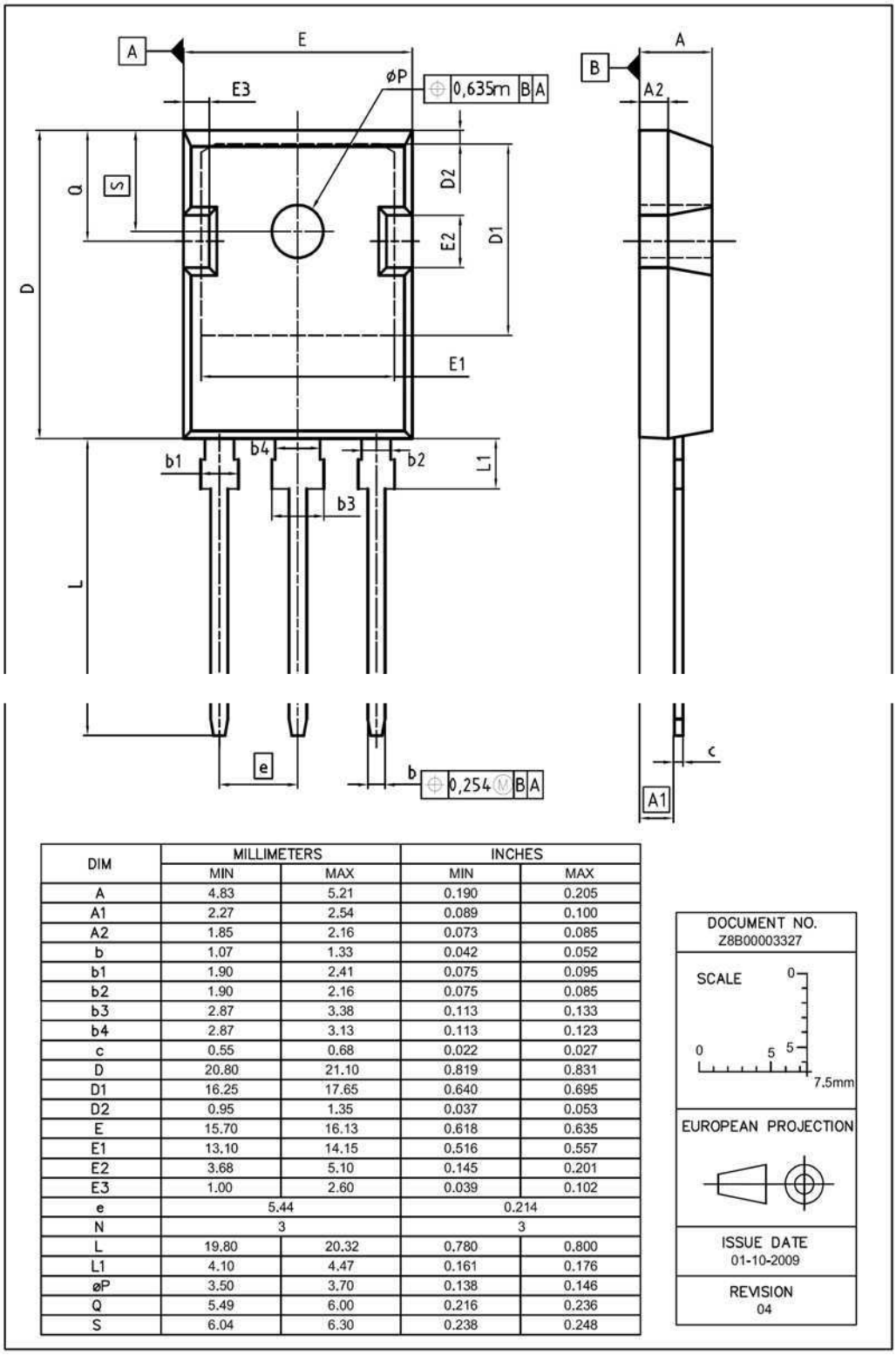

DIM	MILLIMETERS		INCHES	
	MIN	MAX	MIN	MAX
A	4.83	5.21	0.190	0.205
A1	2.27	2.54	0.089	0.100
A2	1.85	2.16	0.073	0.085
b	1.07	1.33	0.042	0.052
b1	1.90	2.41	0.075	0.095
b2	1.90	2.16	0.075	0.085
b3	2.87	3.38	0.113	0.133
b4	2.87	3.13	0.113	0.123
c	0.55	0.68	0.022	0.027
D	20.80	21.10	0.819	0.831
D1	16.25	17.65	0.640	0.695
D2	0.95	1.35	0.037	0.053
E	15.70	16.13	0.618	0.635
E1	13.10	14.15	0.516	0.557
E2	3.68	5.10	0.145	0.201
E3	1.00	2.60	0.039	0.102
e	5.44		0.214	
N	3		3	
L	19.80	20.32	0.780	0.800
L1	4.10	4.47	0.161	0.176
øP	3.50	3.70	0.138	0.146
Q	5.49	6.00	0.216	0.236
S	6.04	6.30	0.238	0.248

DOCUMENT NO.
Z8B00003327

SCALE 0 5 5 7.5mm

EUROPEAN PROJECTION

ISSUE DATE
01-10-2009

REVISION
04

Figure 1 Outlines TO-247, dimensions in mm/inches

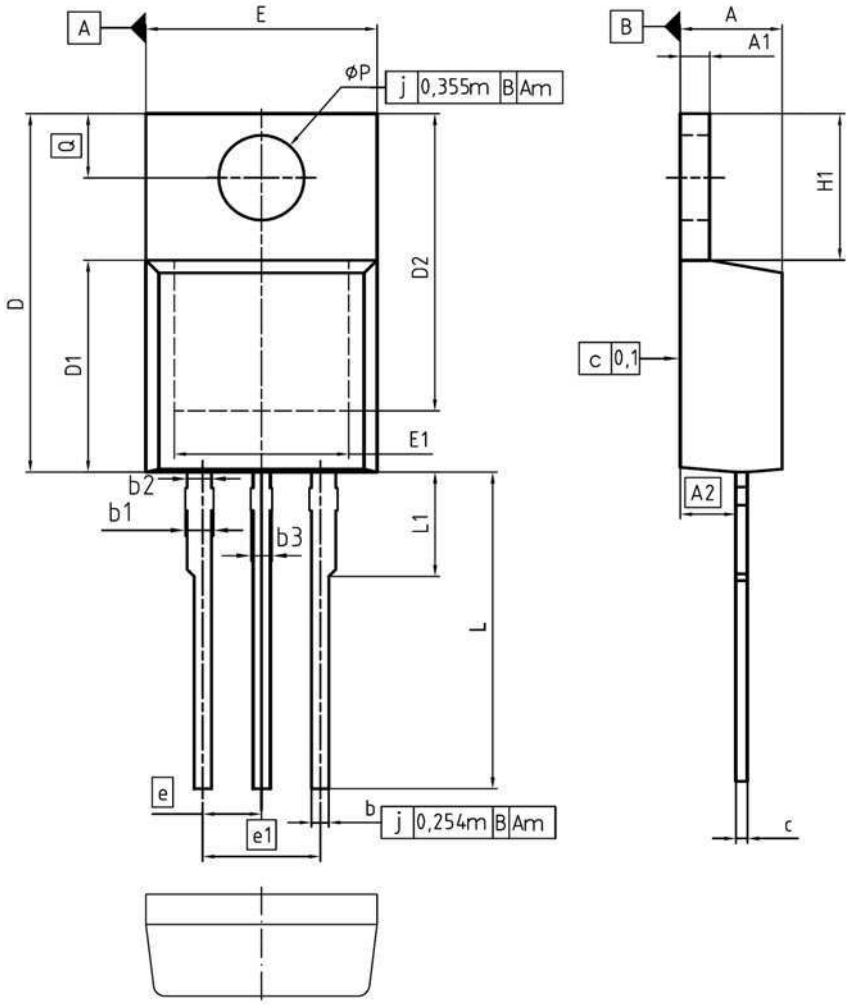

DIM	MILLIMETERS		INCHES	
	MIN	MAX	MIN	MAX
A	4.30	4.57	0.169	0.180
A1	1.17	1.40	0.046	0.055
A2	2.15	2.72	0.085	0.107
b	0.65	0.86	0.026	0.034
b1	0.95	1.40	0.037	0.055
b2	0.95	1.15	0.037	0.045
b3	0.65	1.15	0.026	0.045
c	0.33	0.60	0.013	0.024
D	14.81	15.95	0.583	0.628
D1	8.51	9.45	0.335	0.372
D2	12.19	13.10	0.480	0.516
E	9.70	10.36	0.382	0.408
E1	6.50	8.60	0.256	0.339
e	2.54		0.100	
e1	5.08		0.200	
N	3		3	
H1	5.90	6.90	0.232	0.272
L	13.00	14.00	0.512	0.551
L1	-	4.80	-	0.189
øP	3.60	3.89	0.142	0.153
Q	2.60	3.00	0.102	0.118

DOCUMENT NO.
Z8B00003318

SCALE 0 2.5 5mm

EUROPEAN PROJECTION

ISSUE DATE
23-08-2007

REVISION
05

Figure 2 Outlines TO-220, dimensions in mm/inches

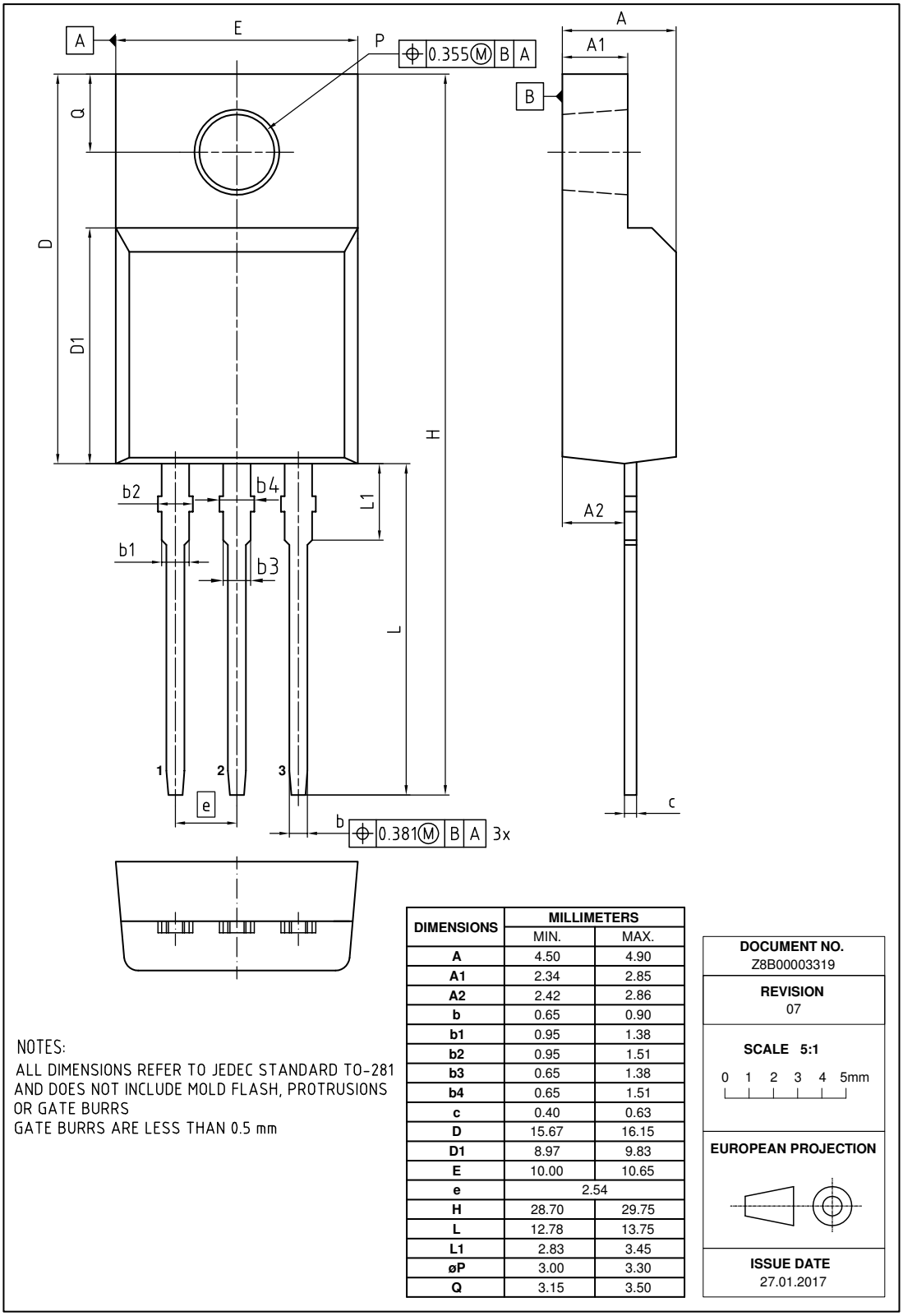

DIMENSIONS	MILLIMETERS	
	MIN.	MAX.
A	4.50	4.90
A1	2.34	2.85
A2	2.42	2.86
b	0.65	0.90
b1	0.95	1.38
b2	0.95	1.51
b3	0.65	1.38
b4	0.65	1.51
c	0.40	0.63
D	15.67	16.15
D1	8.97	9.83
E	10.00	10.65
e	2.54	
H	28.70	29.75
L	12.78	13.75
L1	2.83	3.45
øP	3.00	3.30
Q	3.15	3.50

NOTES:
ALL DIMENSIONS REFER TO JEDEC STANDARD TO-281 AND DOES NOT INCLUDE MOLD FLASH, PROTRUSIONS OR GATE BURRS
GATE BURRS ARE LESS THAN 0.5 mm

DOCUMENT NO.
Z8B00003319

REVISION
07

SCALE 5:1
0 1 2 3 4 5mm

EUROPEAN PROJECTION

ISSUE DATE
27.01.2017

Figure 3 Outline PG-TO-220 FullPAK dimensions in mm

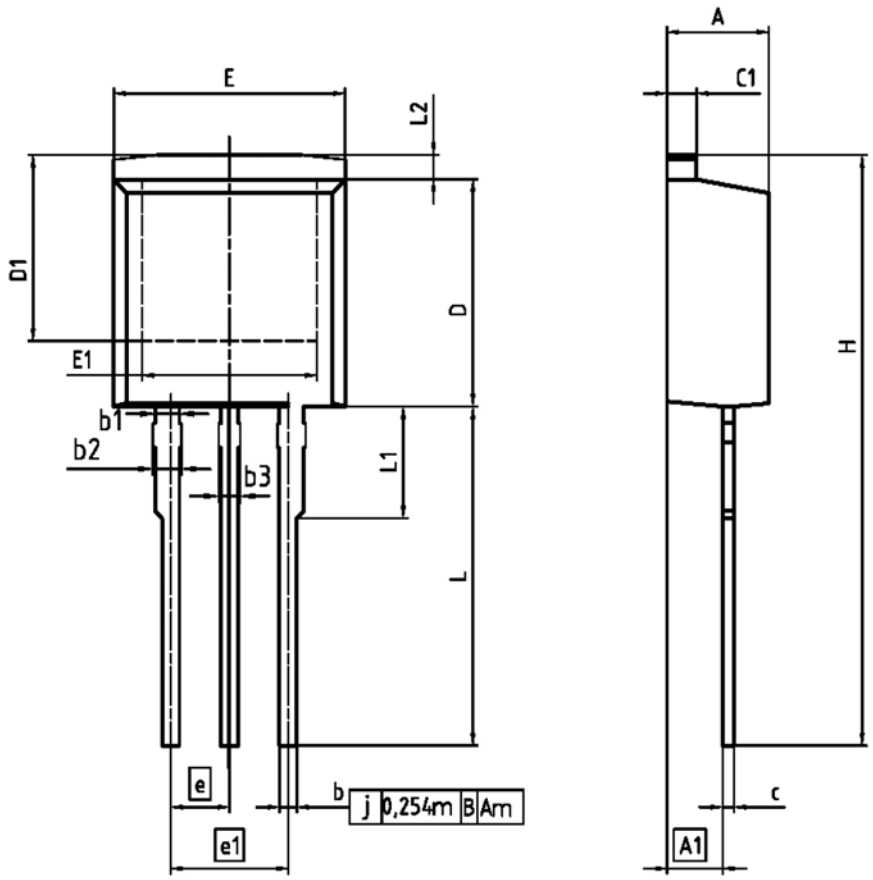

DIM	MILLIMETERS		INCHES	
	MIN	MAX	MIN	MAX
A	4.300	4.572	0.169	0.180
A1	2.150	2.718	0.085	0.107
b	0.650	0.864	0.026	0.034
b1	0.950	1.093	0.037	0.043
b2	0.950	1.400	0.037	0.055
b3	0.650	1.118	0.026	0.044
c	0.330	0.600	0.013	0.024
c1	1.170	1.400	0.046	0.055
D	8.509	9.450	0.335	0.372
D1	6.900	-	0.272	-
E	9.700	10.363	0.382	0.408
E1	6.500	8.600	0.256	0.339
e	2.540		0.100	
e1	5.080		0.200	
N	3		3	
L	13.000	14.000	0.512	0.551
L1	-	4.800	-	0.189
L2	-	1.727	-	0.068

REFERENCE
JEDEC TO262

SCALE 0 2.5 0 2.5 5mm

EUROPEAN PROJECTION

ISSUE DATE
05-05-2006

FILE
TO262_1

Figure 4 Outlines TO-262, dimensions in mm/inches

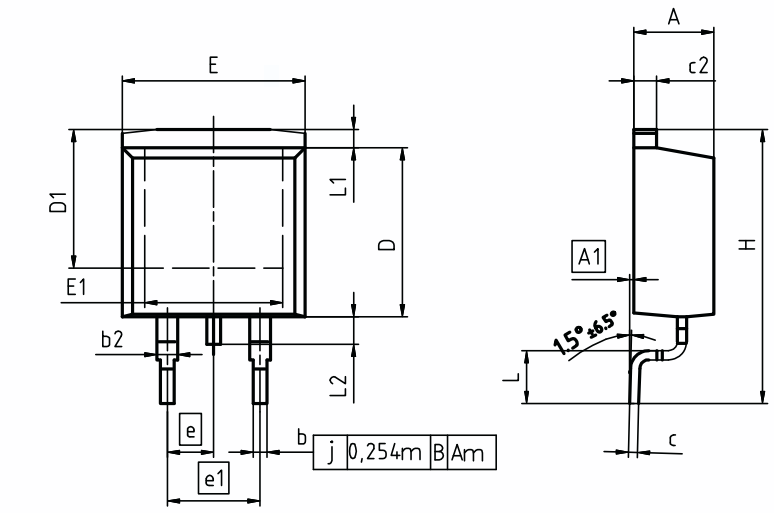

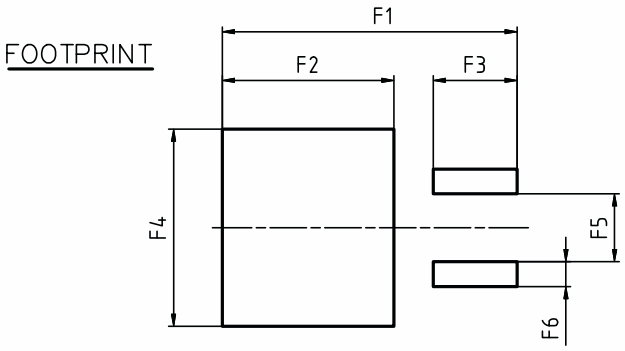

DIM	MILLIMETERS		INCHES	
	MIN	MAX	MIN	MAX
A	4.30	4.57	0.169	0.180
A1	0.00	0.25	0.000	0.010
b	0.65	0.85	0.026	0.033
b2	0.95	1.15	0.037	0.045
c	0.33	0.65	0.013	0.026
c2	1.17	1.40	0.046	0.055
D	8.51	9.45	0.335	0.372
D1	7.10	7.90	0.280	0.311
E	9.80	10.31	0.386	0.406
E1	6.50	8.60	0.256	0.339
e	2.54		0.100	
e1	5.08		0.200	
N	2		2	
H	14.61	15.88	0.575	0.625
L	2.29	3.00	0.090	0.118
L1	0.70	1.60	0.028	0.063
L2	1.00	1.78	0.039	0.070
F1	16.05	16.25	0.632	0.640
F2	9.30	9.50	0.366	0.374
F3	4.50	4.70	0.177	0.185
F4	10.70	10.90	0.421	0.429
F5	3.65	3.85	0.144	0.152
F6	1.25	1.45	0.049	0.057

DOCUMENT NO.
Z8B00003324

SCALE 0 5 5 7.5mm

EUROPEAN PROJECTION

ISSUE DATE
30-08-2007

REVISION
01

Figure 5 Outlines TO-263, dimensions in mm/inches

Revision History

IPx60R190C6

Revision: 2018-03-04, Rev. 2.3

Previous Revision

Revision	Date	Subjects (major changes since last revision)
2.0	2011-06-08	Release of final data sheet
2.1	2011-09-14	-
2.2	2015-02-09	PG-TO220 FullPAK package outline update (creation:2014-12-02)
2.3	2018-03-04	Outline PG-TO220 FullPAK update

Trademarks of Infineon Technologies AG

AURIX™, C166™, CanPAK™, CIPOS™, CoolGaN™, CoolMOS™, CoolSET™, CoolSiC™, CORECONTROL™, CROSSAVE™, DAVE™, DI-POL™, DrBlade™, EasyPIM™, EconoBRIDGE™, EconoDUAL™, EconoPACK™, EconoPIM™, EiceDRIVER™, eupec™, FCOS™, HITFET™, HybridPACK™, Infineon™, ISOFACE™, IsoPACK™, i-Wafer™, MIPAQ™, ModSTACK™, my-d™, NovalithIC™, OmniTune™, OPTIGA™, OptiMOS™, ORIGA™, POWERCODE™, PRIMARION™, PrimePACK™, PrimeSTACK™, PROFET™, PRO-SIL™, RASIC™, REAL3™, ReverSave™, SatRIC™, SIEGET™, SIPMOS™, SmartLEWIS™, SOLID FLASH™, SPOC™, TEMPFET™, thinQ!™, TRENCHSTOP™, TriCore™.

Trademarks updated August 2015

Other Trademarks

All referenced product or service names and trademarks are the property of their respective owners.

We Listen to Your Comments
Any information within this document that you feel is wrong, unclear or missing at all? Your feedback will help us to continuously improve the quality of this document. Please send your proposal (including a reference to this document) to:
erratum@infineon.com

Published by
Infineon Technologies AG
81726 München, Germany
© 2018 Infineon Technologies AG
All Rights Reserved.

Legal Disclaimer
The information given in this document shall in no event be regarded as a guarantee of conditions or characteristics (“Beschaffenheitsgarantie”) .

With respect to any examples, hints or any typical values stated herein and/or any information regarding the application of the product, Infineon Technologies hereby disclaims any and all warranties and liabilities of any kind, including without limitation warranties of non-infringement of intellectual property rights of any third party.
In addition, any information given in this document is subject to customer’s compliance with its obligations stated in this document and any applicable legal requirements, norms and standards concerning customer’s products and any use of the product of Infineon Technologies in customer’s applications.
The data contained in this document is exclusively intended for technically trained staff. It is the responsibility of customer’s technical departments to evaluate the suitability of the product for the intended application and the completeness of the product information given in this document with respect to such application.

Information
For further information on technology, delivery terms and conditions and prices please contact your nearest Infineon Technologies Office (**www.infineon.com**).

Warnings
Due to technical requirements, components may contain dangerous substances. For information on the types in question, please contact the nearest Infineon Technologies Office.
The Infineon Technologies component described in this Data Sheet may be used in life-support devices or systems and/or automotive, aviation and aerospace applications or systems only with the express written approval of Infineon Technologies, if a failure of such components can reasonably be expected to cause the failure of that life-support, automotive, aviation and aerospace device or system or to affect the safety or effectiveness of that device or system. Life support devices or systems are intended to be implanted in the human body or to support and/or maintain and sustain and/or protect human life. If they fail, it is reasonable to assume that the health of the user or other persons may be endangered.

ENTEGRECİ

Bu belge www.entegreci.com üzerinden sunulmaktadır.

Elektronik komponent tedarikinde Entegreci

Entegreci, Eskişehir merkezli, Türkiye geneline satış yapan bir elektronik komponent mağazasıdır. Entegreler (IC), mikrodenetleyiciler, transistörler, diyotlar, pasif elemanlar, konnektörler, modüller ve geliştirme kartları tek adetten seri üretim adetlerine kadar satılır. Ürün sayfalarında güncel stok durumunu, fiyatı ve datasheet bağlantısını bulabilirsiniz.

Parça koduyla arama

Üretici parça numarasını yazın; stok ve fiyatı hemen görün.

www.entegreci.com

Ürün kategorileri

Entegreden kapasitöre tüm elektronik komponent kategorileri.

Kategorilere göz atın

Üreticiler

Aradığınız üreticinin ürünlerini tek sayfada inceleyin.

Üreticileri görün

Toplu alım ve teklif

Listede olmayan ya da yüksek adetli parçalar için teklif isteyin.

Teklif isteyin

www.entegreci.com | **destek@entegreci.com** | **0850 305 90 34**

Entegreci is an online electronic components store based in Türkiye. Search by manufacturer part number to see stock, prices and datasheets for integrated circuits, microcontrollers, transistors, passive components and connectors, or request a quote for parts that are not listed.

Bu sayfa Entegreci tarafından eklenmiştir. Belgenin önceki sayfaları asıl yayıncısına aittir ve içeriği değiştirilmemiştir; en güncel sürüm için belgenin yayıncısına başvurun.