MOSFET

650V CoolMOS™ CFD7A SJ Power Device

D²-PAK 7pin

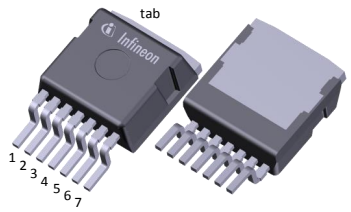

650V CoolMOS™ CFD7A is Infineon's latest generation of market leading automotive qualified high voltage CoolMOS™ MOSFETs. In addition to the well-known attributes of high quality and reliability required by the automotive industry, the new CoolMOS™ CFD7A series provides for an integrated fast body diode and can be used for PFC and resonant switching topologies like the ZVS phase-shift full-bridge and LLC.

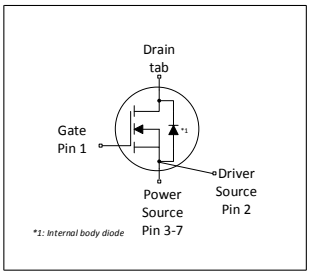

Features

- Latest 650V automotive qualified technology with integrated fast body diode on the market featuring ultra low Q_{rr}
- Lowest FOM $R_{DS(on)}$*Q_g and $R_{DS(on)}$*E_{oss}
- 100% avalanche tested
- Kelvin source contact available
- Best-in-class $R_{DS(on)}$ in SMD and THD packages

Benefits

- Optimized for higher battery voltages up to 475 V thanks to further improved robustness
- Lower switching losses enabling higher switching frequencies
- High quality and reliability
- Advanced controllability due to kelvin source
- Increased package creepage distance
- Increased efficiency in light load and full load conditions

Potential applications

Suitable for PFC and DC-DC stages for:
- Unidirectional and bidirectional DC-DC converters,
- On-Board battery Chargers

Product validation

Qualified according to AEC Q101

Please note: The source and sense source pins are not exchangeable. Their exchange might lead to malfunction. For production part approval process (PPAP) release we propose to share application related information during an early design phase to avoid delays in PPAP release. Please contact Infineon sales office.

Table 1 Key Performance Parameters

Parameter	Value	Unit
V_{DS}	650	V
$R_{DS(on),max}$	99	mΩ
$Q_{g,typ}$	53	nC
$I_{D,pulse}$	107	A
E_{oss} @ 400V	6.8	µJ
Body diode di_F/dt	1300	A/µs

Type / Ordering Code	Package	Marking	Related Links
IPBE65R099CFD7A	PG-TO263-7-11	65A099F7	see Appendix A

Table of Contents

Description 1
Maximum ratings 3
Thermal characteristics 4
Electrical characteristics 5
Electrical characteristics diagrams 7
Test Circuits 11
Package Outlines 12
Appendix A 13
Revision History 14
Trademarks 14
Disclaimer 14

1 Maximum ratings

at T_j = 25°C, unless otherwise specified

Table 2 Maximum ratings

Parameter	Symbol	Values			Unit	Note / Test Condition
		Min.	Typ.	Max.		
Continuous drain current[1)]	I_D	- -	- -	24 15	A	T_C=25°C T_C=100°C
Pulsed drain current[2)]	$I_{D,pulse}$	-	-	107	A	T_C=25°C
Avalanche energy, single pulse	E_{AS}	-	-	125	mJ	I_D=5.0A; V_{DD}=50V; see table 10
Avalanche current, single pulse	I_{AS}	-	-	5.0	A	-
MOSFET dv/dt ruggedness	dv/dt	-	-	120	V/ns	V_{DS}=0...400V
Gate source voltage (static)	V_{GS}	-20	-	20	V	static;
Gate source voltage (dynamic)	$V_{GSk,pulse}$	-30	-	30	V	$f_{repetition}$<=100kHz, t_{pulse} <= 2ns
Power dissipation	P_{tot}	-	-	127	W	T_C=25°C
Storage temperature	T_{stg}	-55	-	150	°C	-
Operating junction temperature	T_j	-40	-	150	°C	-
Mounting torque	-	-	-	-	Ncm	-
Continuous diode forward current	I_S	-	-	24	A	T_C=25°C
Diode pulse current[2)]	$I_{S,pulse}$	-	-	107	A	T_C=25°C
Reverse diode dv/dt[3)]	dv/dt	-	-	70	V/ns	V_{DS}=0...400V, I_{SD}<=12.5A, T_j=25°C see table 8
Maximum diode commutation speed	di_F/dt	-	-	1300	A/µs	V_{DS}=0...400V, I_{SD}<=12.5A, T_j=25°C see table 8

[1)] Limited by $T_{j\,max}$.
[2)] Pulse width t_p limited by $T_{j,max}$
[3)] Identical low side and high side switch with identical R_G

2 Thermal characteristics

Table 3 Thermal characteristics

Parameter	Symbol	Values			Unit	Note / Test Condition
		Min.	Typ.	Max.		
Thermal resistance, junction - case	R_{thJC}	-	-	0.98	°C/W	-
Soldering temperature, reflow soldering allowed	T_{sold}	-	-	260	°C	reflow MSL1

3 Electrical characteristics

at T_j=25°C, unless otherwise specified

Table 4 Static characteristics

For applications with applied blocking voltage > 475 V, it is required that the customer evaluates the impact of cosmic radiation effect in early design phase and contacts the Infineon sales office for the necessary technical support by Infineon.

Parameter	Symbol	Values			Unit	Note / Test Condition
		Min.	Typ.	Max.		
Drain-source breakdown voltage	$V_{(BR)DSS}$	650	-	-	V	V_{GS}=0V, I_D=1mA
Gate threshold voltage[1)]	$V_{(GS)th}$	3.5	4	4.5	V	V_{DS}=V_{GS}, I_D=0.63mA
Zero gate voltage drain current	I_{DSS}	- -	- 80	1 -	µA	V_{DS}=650V, V_{GS}=0V, T_j=25°C V_{DS}=650V, V_{GS}=0V, T_j=150°C
Gate-source leakage current	I_{GSS}	-	-	0.1	µA	V_{GS}=20V, V_{DS}=0V
Drain-source on-state resistance	$R_{DS(on)}$	- -	0.082 0.183	0.099 -	Ω	V_{GS}=10V, I_D=12.5A, T_j=25°C V_{GS}=10V, I_D=12.5A, T_j=150°C
Gate resistance	R_G	-	5.9	-	Ω	f=250kHz, open drain

Table 5 Dynamic characteristics

External parasitic elements (PCB layout) influence switching behavior significantly.
Stray inductances and coupling capacitances must be minimized.
For layout recommendations please use provided application notes or contact Infineon sales office.

Parameter	Symbol	Values			Unit	Note / Test Condition
		Min.	Typ.	Max.		
Input capacitance	C_{iss}	-	2513	-	pF	V_{GS}=0V, V_{DS}=400V, f=250kHz
Output capacitance	C_{oss}	-	36	-	pF	V_{GS}=0V, V_{DS}=400V, f=250kHz
Effective output capacitance, energy related[2)]	$C_{o(er)}$	-	85	-	pF	V_{GS}=0V, V_{DS}=0...400V
Effective output capacitance, time related[3)]	$C_{o(tr)}$	-	893	-	pF	I_D=constant, V_{GS}=0V, V_{DS}=0...400V
Turn-on delay time	$t_{d(on)}$	-	20	-	ns	V_{DD}=400V, V_{GS}=13V, I_D=12.5A, R_G=5.3Ω; see table 9
Rise time	t_r	-	3	-	ns	V_{DD}=400V, V_{GS}=13V, I_D=12.5A, R_G=5.3Ω; see table 9
Turn-off delay time	$t_{d(off)}$	-	72	-	ns	V_{DD}=400V, V_{GS}=13V, I_D=12.5A, R_G=5.3Ω; see table 9
Fall time	t_f	-	4	-	ns	V_{DD}=400V, V_{GS}=13V, I_D=12.5A, R_G=5.3Ω; see table 9

[1)] We do not recommend using the CoolMOS mentioned in this datasheet to operate in “linear mode”. For assessment of potential “linear mode”, please contact Infineon sales office.
[2)] $C_{o(er)}$ is a fixed capacitance that gives the same stored energy as C_{oss} while V_{DS} is rising from 0 to 400V
[3)] $C_{o(tr)}$ is a fixed capacitance that gives the same charging time as C_{oss} while V_{DS} is rising from 0 to 400V

Table 6 Gate charge characteristics

Parameter	Symbol	Values			Unit	Note / Test Condition
		Min.	Typ.	Max.		
Gate to source charge	Q_{gs}	-	14	-	nC	V_{DD}=400V, I_D=12.5A, V_{GS}=0 to 10V
Gate to drain charge	Q_{gd}	-	16	-	nC	V_{DD}=400V, I_D=12.5A, V_{GS}=0 to 10V
Gate charge total	Q_g	-	53	-	nC	V_{DD}=400V, I_D=12.5A, V_{GS}=0 to 10V
Gate plateau voltage	$V_{plateau}$	-	5.7	-	V	V_{DD}=400V, I_D=12.5A, V_{GS}=0 to 10V

Table 7 Reverse diode characteristics

Parameter	Symbol	Values			Unit	Note / Test Condition
		Min.	Typ.	Max.		
Diode forward voltage	V_{SD}	-	1.1	-	V	V_{GS}=0V, I_F=12.5A, T_j=25°C
Reverse recovery time	t_{rr}	-	147	-	ns	V_R=400V, I_F=12.5A, di_F/dt=100A/µs; see table 8
Reverse recovery charge	Q_{rr}	-	0.78	-	µC	V_R=400V, I_F=12.5A, di_F/dt=100A/µs; see table 8
Peak reverse recovery current	I_{rrm}	-	9.8	-	A	V_R=400V, I_F=12.5A, di_F/dt=100A/µs; see table 8

4 Electrical characteristics diagrams

Diagram 1: Power dissipation

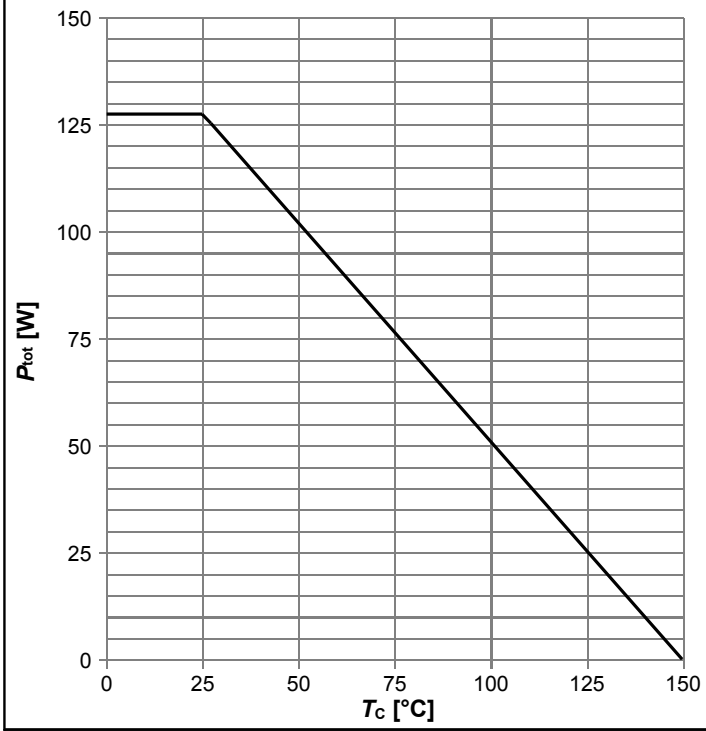

$P_{tot}=f(T_C)$

Diagram 2: Safe operating area

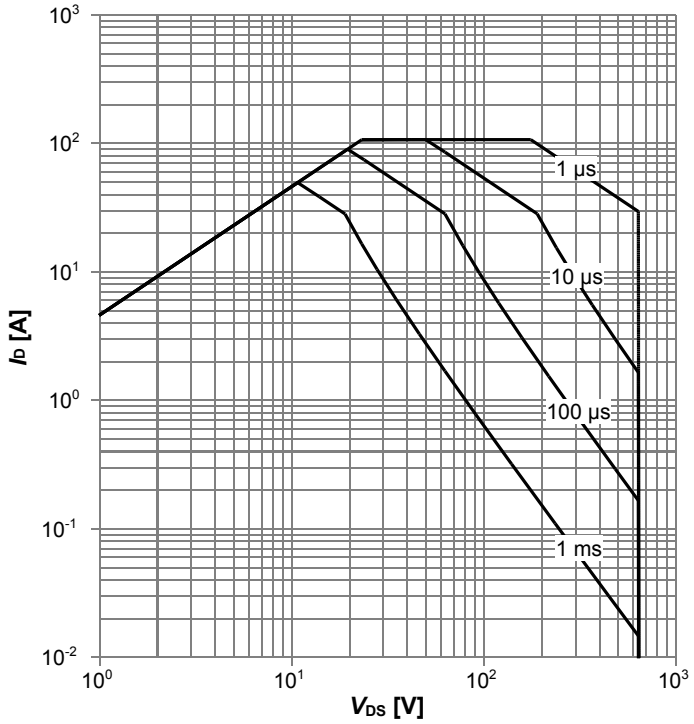

$I_D=f(V_{DS})$; T_C=25 °C; D=0; parameter: t_p

Diagram 3: Safe operating area

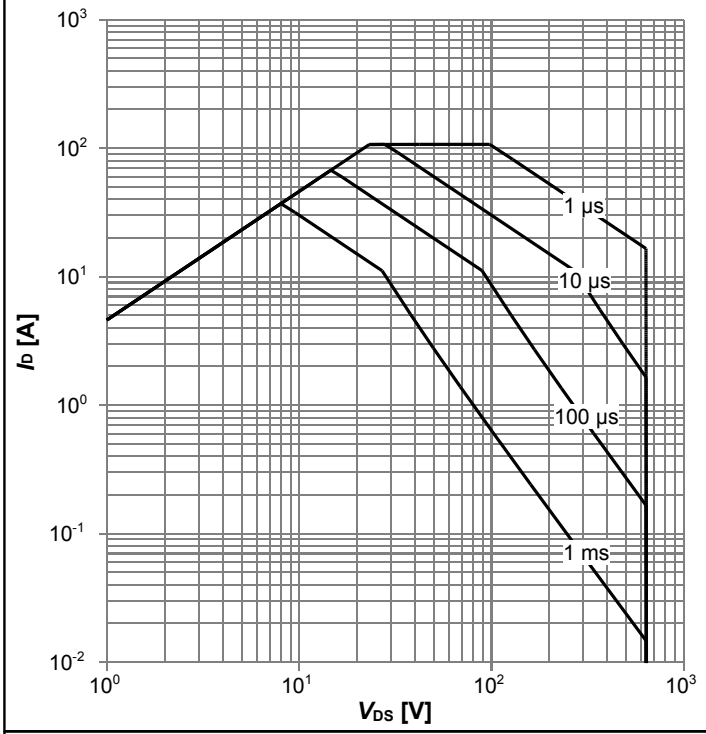

$I_D=f(V_{DS})$; T_C=80 °C; D=0; parameter: t_p

Diagram 4: Max. transient thermal impedance

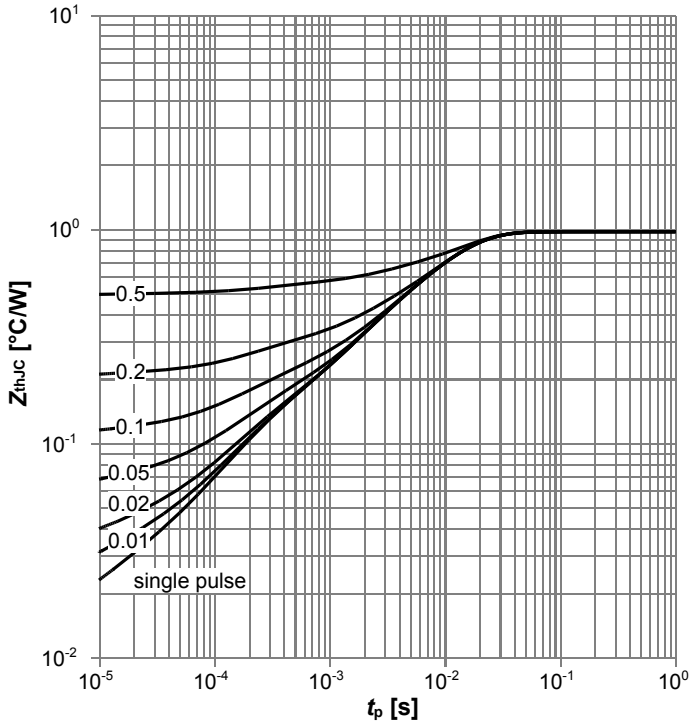

$Z_{thJC}=f(t_P)$; parameter: $D=t_p/T$

Diagram 5: Typ. output characteristics

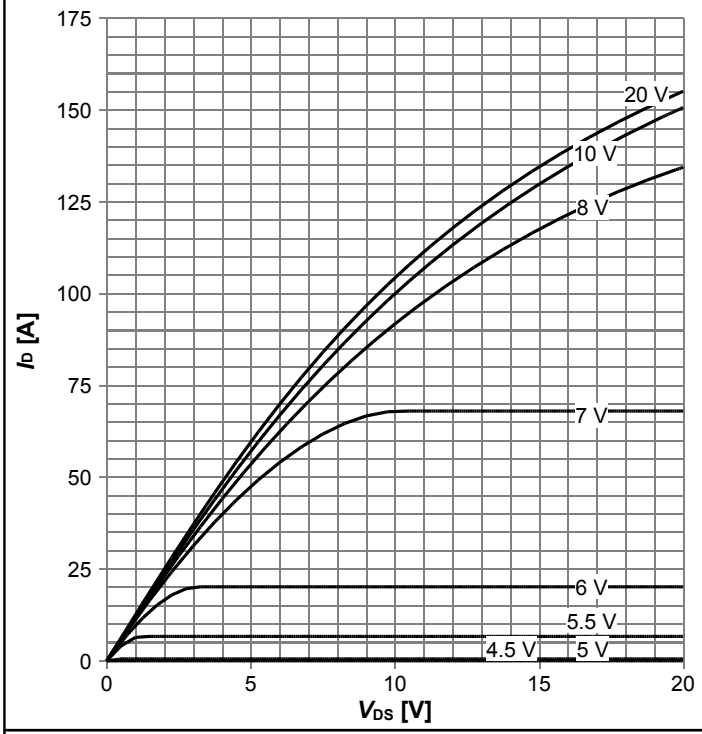

$I_D=f(V_{DS})$; $T_j=25$ °C; parameter: V_{GS}

Diagram 6: Typ. output characteristics

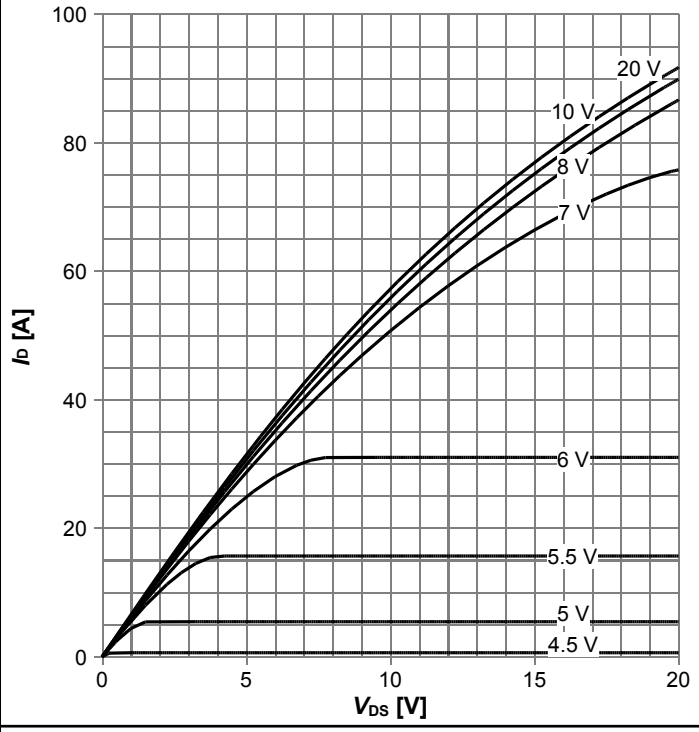

$I_D=f(V_{DS})$; $T_j=125$ °C; parameter: V_{GS}

Diagram 7: Typ. drain-source on-state resistance

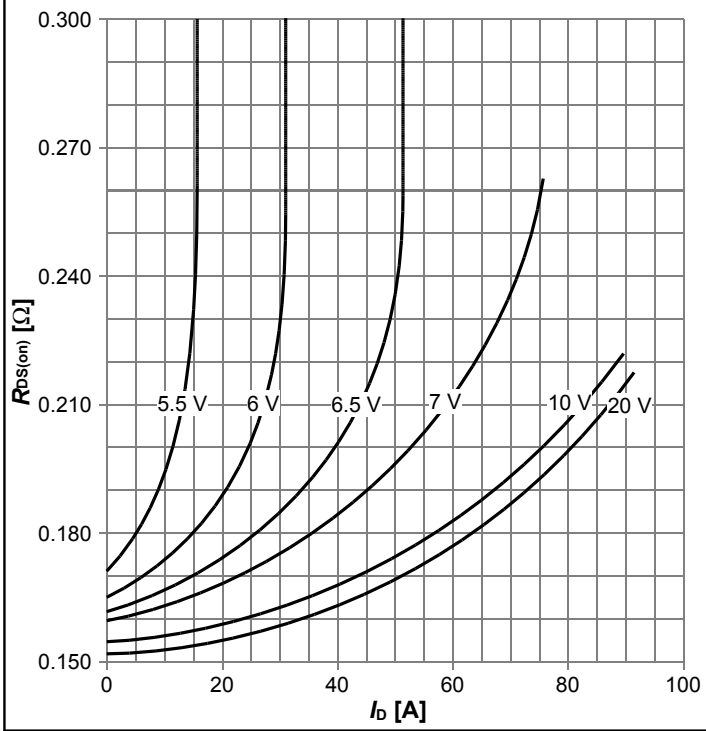

$R_{DS(on)}=f(I_D)$; $T_j=125$ °C; parameter: V_{GS}

Diagram 8: Drain-source on-state resistance

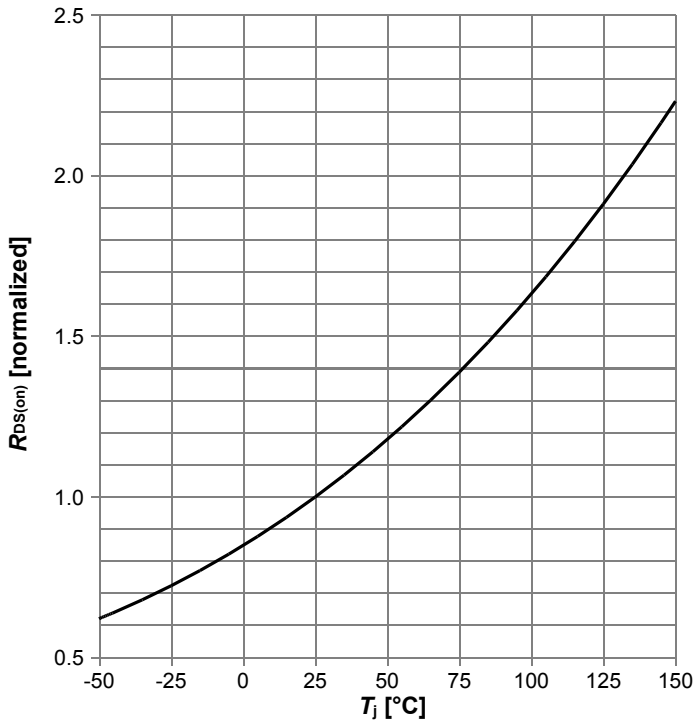

$R_{DS(on)}=f(T_j)$; $I_D=12.5$ A; $V_{GS}=10$ V

Diagram 9: Typ. transfer characteristics

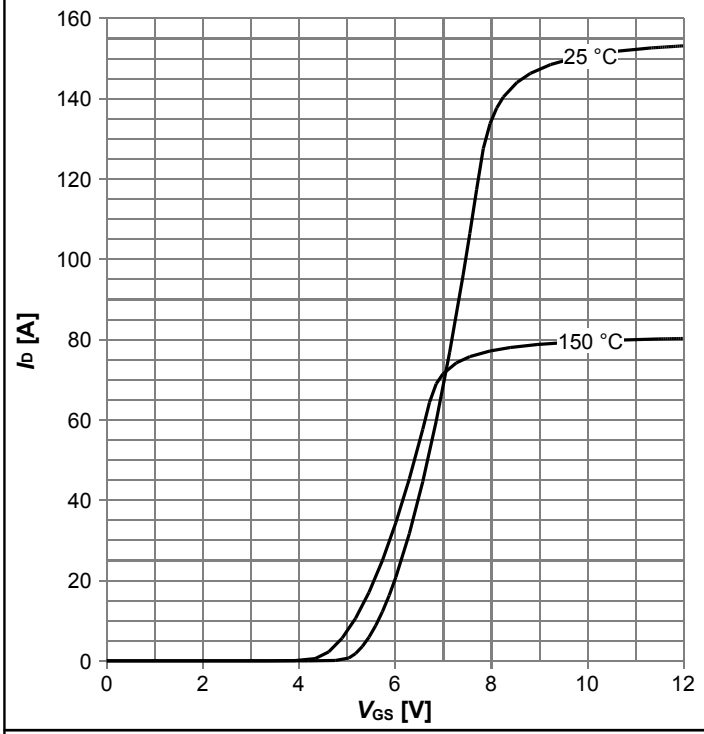

$I_D=f(V_{GS})$; V_{DS}=20V; parameter: T_j

Diagram 10: Typ. gate charge

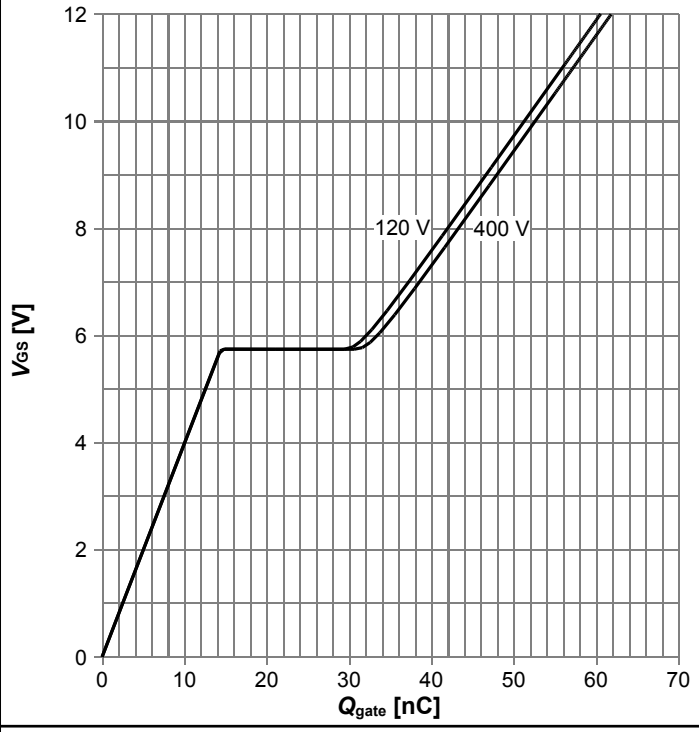

$V_{GS}=f(Q_{gate})$; I_D=12.5 A pulsed; parameter: V_{DD}

Diagram 11: Forward characteristics of reverse diode

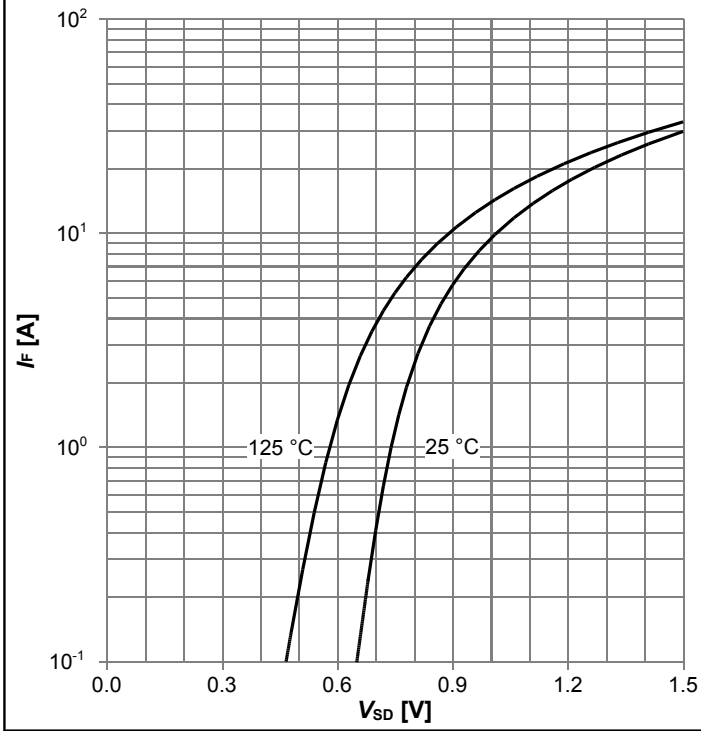

$I_F=f(V_{SD})$; parameter: T_j

Diagram 12: Avalanche energy

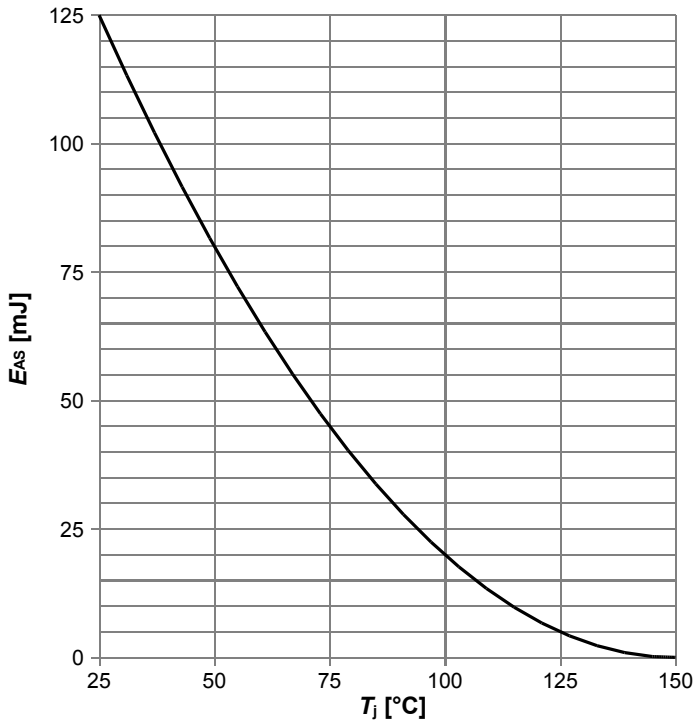

$E_{AS}=f(T_j)$; I_D=5.0 A; V_{DD}=50 V

Diagram 13: Drain-source breakdown voltage

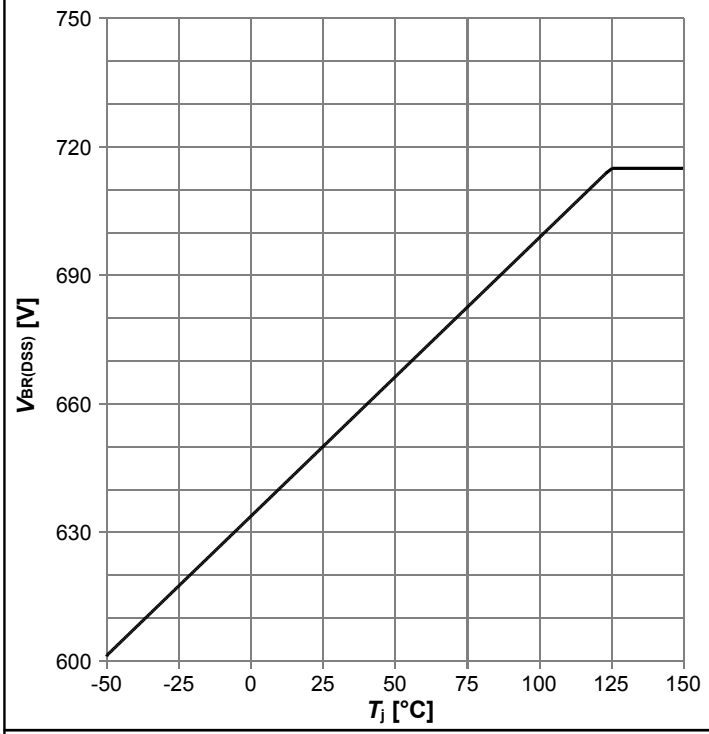

$V_{BR(DSS)}$=f(T_j); I_D=1 mA

Diagram 14: Typ. capacitances

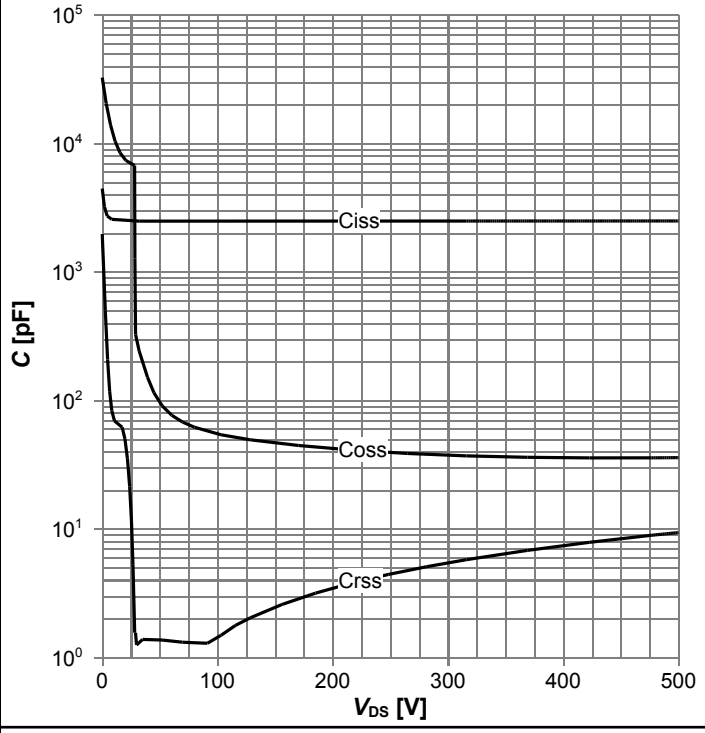

C=f(V_{DS}); V_{GS}=0 V; f=250 kHz

Diagram 15: Typ. Coss stored energy

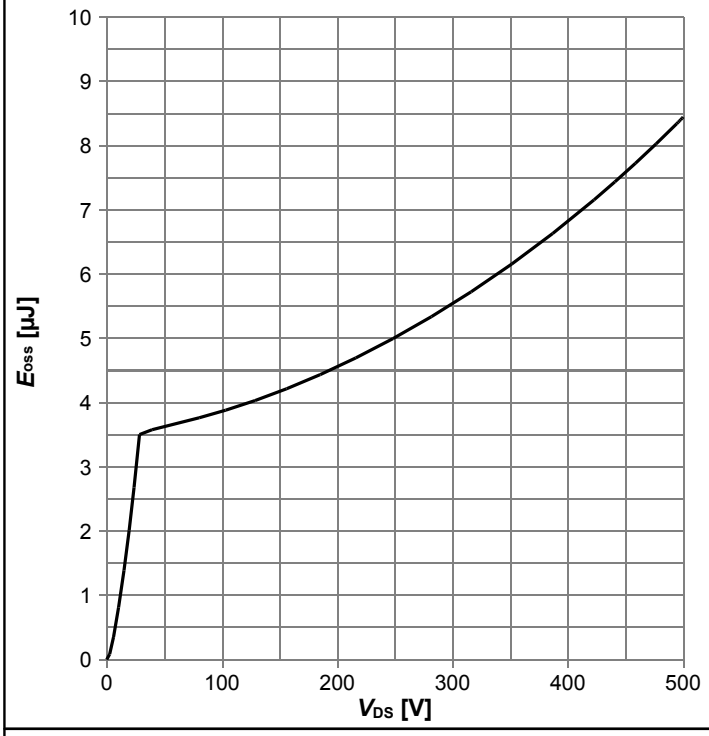

E_{oss}=f(V_{DS})

5 Test Circuits

Table 8 Diode characteristics

Test circuit for diode characteristics	Diode recovery waveform
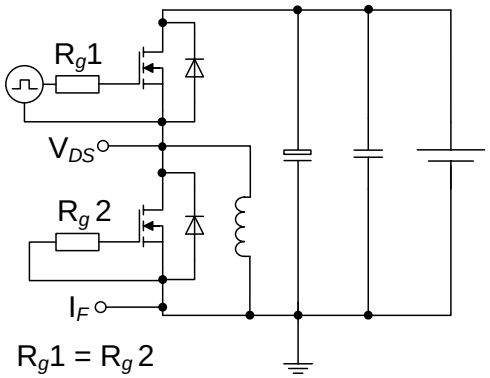	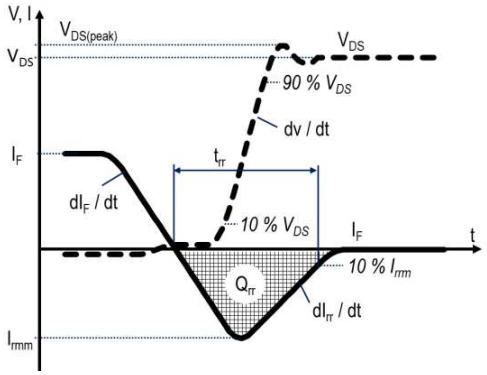

Table 9 Switching times (ss)

Switching times test circuit for inductive load	Switching times waveform
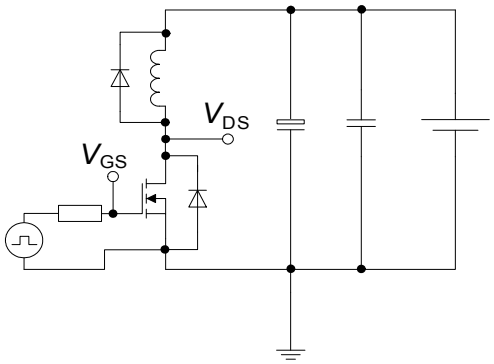	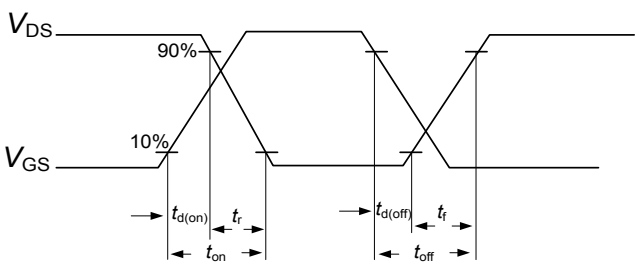

Table 10 Unclamped inductive load (ss)

Unclamped inductive load test circuit	Unclamped inductive waveform
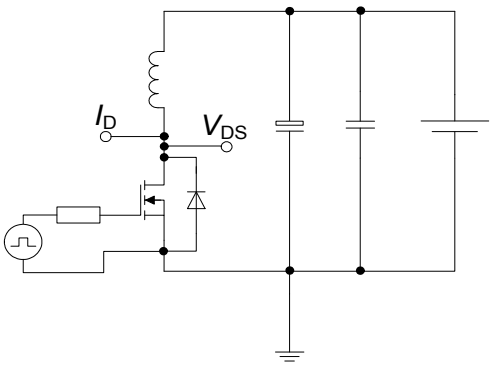	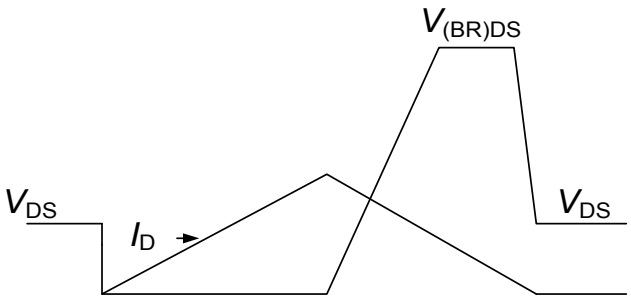

6 Package Outlines

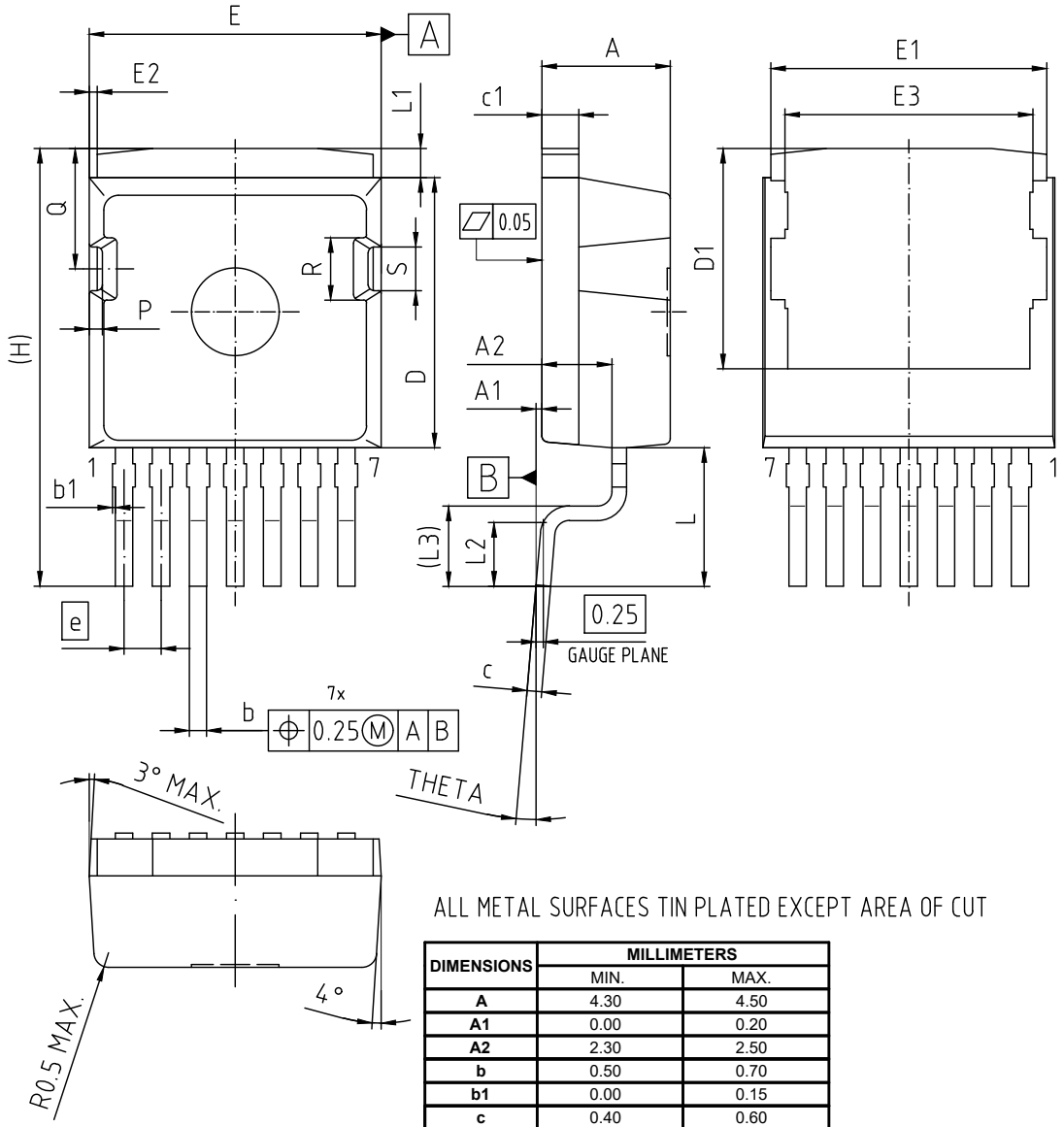

DIMENSIONS	MILLIMETERS	
	MIN.	MAX.
A	4.30	4.50
A1	0.00	0.20
A2	2.30	2.50
b	0.50	0.70
b1	0.00	0.15
c	0.40	0.60
c1	1.17	1.37
D	9.05	9.45
D1	7.30	7.50
E	9.80	10.20
E1	9.36	9.56
E2	0.00	0.30
E3	8.40	8.60
e	1.27	
H	15.00	
L	4.20	5.20
L1	0.70	1.30
L2	1.70	2.30
L3	2.70	
P	0.35	0.55
Q	4.02	4.22
R	2.03	2.23
S	1.40	1.60
THETA	0.00°	8.00°

DOCUMENT NO.	Z8B00189665
REVISION	01
SCALE 5:1	0 1 2 3 4 5mm
EUROPEAN PROJECTION	
ISSUE DATE	20.09.2018

Figure 1 Outline PG-TO263-7-11, dimensions in mm

7 Appendix A

Table 11 Related Links

- **IFX CoolMOS CFD7A Webpage:** www.infineon.com
- **IFX CoolMOS CFD7A application note:** www.infineon.com
- **IFX CoolMOS CFD7A simulation model:** www.infineon.com
- **IFX Design tools:** www.infineon.com

Revision History

IPBE65R099CFD7A

Revision: 2021-11-24, Rev. 2.2

Previous Revision		
Revision	Date	Subjects (major changes since last revision)
2.0	2020-03-04	Release of final version
2.1	2020-04-02	Updated marketing text and drain-source breakdown voltage footnote.
2.2	2021-11-24	Change of wording regarding breakdown voltage / cosmic ray

Trademarks

All referenced product or service names and trademarks are the property of their respective owners.

Disclaimer

We Listen to Your Comments
Any information within this document that you feel is wrong, unclear or missing at all? Your feedback will help us to continuously improve the quality of this document. Please send your proposal (including a reference to this document) to:
erratum@infineon.com

Published by
Infineon Technologies AG
81726 München, Germany
© 2021 Infineon Technologies AG
All Rights Reserved.

Legal Disclaimer
The information given in this document shall in no event be regarded as a guarantee of conditions or characteristics (“Beschaffenheitsgarantie”) .

With respect to any examples, hints or any typical values stated herein and/or any information regarding the application of the product, Infineon Technologies hereby disclaims any and all warranties and liabilities of any kind, including without limitation warranties of non-infringement of intellectual property rights of any third party.
In addition, any information given in this document is subject to customer’s compliance with its obligations stated in this document and any applicable legal requirements, norms and standards concerning customer’s products and any use of the product of Infineon Technologies in customer’s applications.
The data contained in this document is exclusively intended for technically trained staff. It is the responsibility of customer’s technical departments to evaluate the suitability of the product for the intended application and the completeness of the product information given in this document with respect to such application.

Information
For further information on technology, delivery terms and conditions and prices please contact your nearest Infineon Technologies Office (www.infineon.com).

Warnings
Due to technical requirements components may contain dangerous substances. For information on the types in question please contact your nearest Infineon Technologies Office.
Infineon Technologies Components may only be used in life-support devices or systems with the express written approval of Infineon Technologies, if a failure of such components can reasonably be expected to cause the failure of that life-support device or system, or to affect the safety or effectiveness of that device or system. Life support devices or systems are intended to be implanted in the human body, or to support and/or maintain and sustain and/or protect human life.
If they fail, it is reasonable to assume that the health of the user or other persons may be endangered.

ENTEGRECİ

Bu belge www.entegreci.com üzerinden sunulmaktadır.

Elektronik komponent tedarikinde Entegreci

Entegreci, Eskişehir merkezli, Türkiye geneline satış yapan bir elektronik komponent mağazasıdır. Entegreler (IC), mikrodenetleyiciler, transistörler, diyotlar, pasif elemanlar, konnektörler, modüller ve geliştirme kartları tek adetten seri üretim adetlerine kadar satılır. Ürün sayfalarında güncel stok durumunu, fiyatı ve datasheet bağlantısını bulabilirsiniz.

Parça koduyla arama

Üretici parça numarasını yazın; stok ve fiyatı hemen görün.

www.entegreci.com

Ürün kategorileri

Entegreden kapasitöre tüm elektronik komponent kategorileri.

Kategorilere göz atın

Üreticiler

Aradığınız üreticinin ürünlerini tek sayfada inceleyin.

Üreticileri görün

Toplu alım ve teklif

Listede olmayan ya da yüksek adetli parçalar için teklif isteyin.

Teklif isteyin

www.entegreci.com | **destek@entegreci.com** | **0850 305 90 34**

Entegreci is an online electronic components store based in Türkiye. Search by manufacturer part number to see stock, prices and datasheets for integrated circuits, microcontrollers, transistors, passive components and connectors, or request a quote for parts that are not listed.

Bu sayfa Entegreci tarafından eklenmiştir. Belgenin önceki sayfaları asıl yayıncısına aittir ve içeriği değiştirilmemiştir; en güncel sürüm için belgenin yayıncısına başvurun.