SPX2945

400mA Low Dropout Voltage Regulator
Data Sheet

General Description

The SPX2945 is a low power voltage regulator. This device is an excellent choice for use in battery-powered applications such as cordless telephones, radio control systems, and portable computers. The SPX2945 features very low quiescent current (100µA Typ) and very low dropout voltage. This includes a tight initial tolerance of 1% max and very low output temperature coefficient, making the SPX2945 useful as a low power voltage reference.

The SPX2945 is offered in a surface mount 3-pin SOT-223 package.

Look for SPX2951 for 150mA and SPX2954 for 250mAapplications.

SOT-223 version available. TO-220, TO-263, TO-252, NSOIC versions obsolete

For more details about the ordering information, see "Ordering Information" on page 13.

Features

- Output 3.3V at 400mA output
- Very low quiescent current, 100µA
- Low dropout voltage, 420mV at 400mA
- Extremely tight load and line regulation
- Very low temperature coefficient
- Current and thermal limiting

Applications

- Networking
- Telecommunications
- Industrial systems
- FPGA and uC's based systems
- Remote controlled vehicles

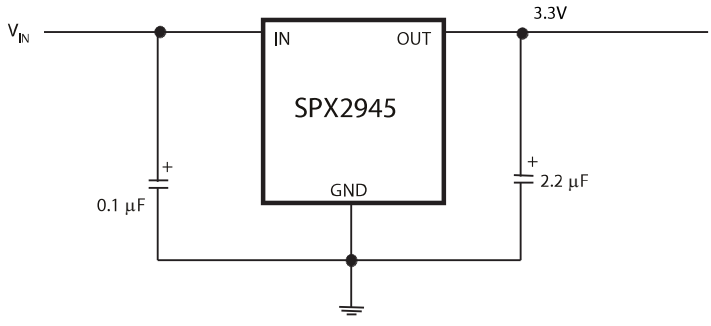

Figure 1: SPX2945 Typical Application

Revision History

Document No.	Release Date	Change Description
243DSR01	July 8, 2025	**Updated:** ■ "SPX2945 Mechanical Dimensions–3-Pin SOT-223" figure from Revision C to Revision D. No change to content; MxL document registration only. ■ "SPX2945 Land Pattern and Recommended Stencil–3-Pin SOT-223" figure: dimensions corrected.
243DSR00	May 17, 2023	**Updated:** ■ New template applied, contents rewriting, and obsolete packages highlighted. ■ Subtitle updated from "400mA Low Dropout Voltage Regulator with Shutdown" to "400mA Low Dropout Voltage Regulator". ■ "General Description" section. ■ "Features" section. ■ "Applications" section. ■ "Specifications" section. ■ "Pin Information" section. ■ "Application Information" section. ■ "Ordering Information" section. **Added:** ■ "SPX2945 Typical Application" figure. ■ "Land Pattern and Recommended Stencils" section. **Removed** ■ On cover page, Adjustable Regulator, 5V Regulator Circuit, and Pin Information figures.
-	3/14/06	Legacy Sipex data sheet.

Table of Contents

General Description ..... **i**
Features ..... **i**
Applications ..... **i**
Specifications **1**
Absolute Maximum Ratings 1
Thermal Specifications 1
Pin Information **4**
Pin Configuration 4
Block Diagram **5**
Application Information **6**
External Capacitors 6
Error Detection Comparator Output 6
Reducing Output Noise 6
Mechanical Dimensions **7**
3-Pin TO-252 7
3-Pin TO-220 8
3/5-Pin TO-263 9
8-Pin NSOIC 10
3-Pin SOT-223 11
Land Pattern and Recommended Stencil **12**
3-Pin SOT-223 12
Ordering Information **13**

List of Figures

Figure 1: SPX2945 Typical Application i
Figure 2: SPX2945 Pin Configuration 4
Figure 3: SPX2945 Block Diagram 5
Figure 4: $\overline{\text{ERROR}}$ Output Timing 6
Figure 5: SPX2945 Mechanical Dimensions–3-Pin TO-252 7
Figure 6: SPX2945 Mechanical Dimensions–5-Pin TO-220 8
Figure 7: SPX2945 Mechanical Dimensions–3/5-Pin TO-263 9
Figure 8: SPX2945 Mechanical Dimensions–8-Pin NSOIC 10
Figure 9: SPX2945 Mechanical Dimensions–3-Pin SOT-223 11
Figure 10: SPX2945 Land Pattern and Recommended Stencil–3-Pin SOT-223 12

List of Tables

Table 1: Absolute Maximum Ratings 1
Table 2: Thermal Performance 1
Table 3: Electrical Characteristics 2
Table 4: Pin Description 4
Table 5: Ordering Information 13

Specifications

Absolute Maximum Ratings

Important: The stresses above what is listed under the following table may cause permanent damage to the device. This is a stress rating only—functional operation of the device above what is listed under the following table or any other conditions beyond what MaxLinear recommends is not implied. Exposure to conditions above the recommended extended periods of time may affect device reliability. Solder reflow profile is specified in the IPC/JEDEC J-STD-020C standard.

Table 1: Absolute Maximum Ratings

Parameter	Min	Max	Units
Power Dissipation	Internally limited		-
Lead Temperature (soldering, 5 seconds)		260	°C
Storage Temperature Range	–65	150	°C
Operating Junction Temperature Range	–40	125	°C
Input Supply Voltage	–20	26	V
Feedback Supply Voltage	–1.5	26	V
Shutdown Supply Voltage	–0.3	26	V
Error Comparator Output	–0.3	26	V
ESD Rating	-	2	kV

Thermal Specifications

SOT-223 version available. TO-220, TO-263, TO-252, NSOIC versions obsolete

Table 2: Thermal Performance

Symbol	Parameter	Package	Typ	Units
Θ_{JA}	Junction to Ambient	TO-220-3	29.4	°C/W
		TO-263-3	31.4	
		TO-263-5	31.2	
		NSOIC-8	128.4	
		SOT-223	62.3	
		TO-252	50	

Electrical Characteristics

Electrical characteristics at $V_{IN} = V_O + 1V$, $I_O = 1mA$, $C_{OUT} = 2.2\mu F$, $T_A = 25°C$, unless otherwise specified. The • denotes the specifications that apply over full operating temperature range –40°C to 85°C, unless otherwise specified.

Table 3: Electrical Characteristics

Parameter	Conditions		Min	Typ	Max	Units
3.3V Version						
Output Voltage	1mA ≤ I_L ≤ 400mA		3.267	3.3	3.333	V
		•	3.217	3.3	3.382	
5.0V Version						
Output Voltage	1mA ≤ I_L ≤ 400mA		4.950	5.0	5.050	V
		•	4.880	5.0	5.120	
All Voltage Options						
Output Voltage Temperature Coefficient(1)	-	•	20	-	100	ppm/°C
Line Regulation(3)	6V ≤ V_{IN} ≤ 20V (4)	•	-	1.5	20	mV
Load Regulation(3)	I_L = 1 to 400mA		-	6	20	mV
		•	-	-	30	
Dropout Voltage(5)	I_L = 1mA		-	60	100	mV
		•	-	-	150	
	I_L = 400mA		-	360	450	
		•	-	-	700	
Ground Current	I_L = 1mA		-	100	200	µA
		•	-	-	300	
	I_L = 150mA		-	2	4	mA
		•	-	-	6	
	I_L = 300mA		-	4	8	
		•	-	-	12	
	I_L = 400mA		-	8	15	
		•	-	-	25	
Current Limit	V_{OUT} = 0	•	-	330	800	mA
Thermal Regulation	-		-	0.05	0.2	%/W
Output Noise	(10Hz to 100kHz), I_L = 100mA, C_L = 2.2µF		-	400	-	μV_{RMS}
	(10Hz to 100kHz), I_L = 100mA, C_L = 33µF		-	269	-	
PSRR	100KHz, I_L = 100mA, C_L = 10µF		-	31	-	dB
Adjustable 8 Pin Version only						
Reference Voltage	-		1.210	1.235	1.260	V

Table 3: Electrical Characteristics

Parameter	Conditions		Min	Typ	Max	Units
Reference Voltage	Over Temperature		1.185	-	1.285	V
Feedback Pin Bias Current	-		-	20	40	nA
		•	-	-	60	
Reference Voltage Temp. Coefficient	-		-	20	-	ppm/°C
Feedback Pin Bieas Current Temperature Coefficient	-		0.1	-	-	nA/°C
Output Leakage Current	V_{0H}= 20V		0.01	1	¨	µA
		•	-	2	-	
Output Low Voltage	V_{IN} = 4.5V, I_{0L}= 400µA		150	250	-	mV
		•	-	400	-	
Upper Threshold Voltage(6)	-		40	60	-	mV
			25	-	-	
Lower Threshold Voltage(6)	-		75	95	-	mV
		•	-	140	-	
Hysteresis(6)	-		15	-	-	mV
Input Logic Voltage	Low (Regulator ON)	•	-	0.7	-	V
	High (Regulator OFF)	•	1.3	2.0	-	
Shutdown Pin Input Current	VS = 2.4V		30	50	-	µA
		•	-	100	-	
	VS = 26V		450	600	-	
		•	-	750	-	
Regulator Output Current in Shutdown(7)	-		10	3	-	µA
		•	20	-	-	

1. Output or reference voltage temperature coefficients defined as the worst case voltage change divided by the total temperature range.

2. Unless otherwise specified all limits are guaranteed for T_J = 25°C, V_{IN} = 6V, I_L = 1mA and C_L = 2.2µF. Additional conditions for the 8-pin versions are feedback tied to 5V/3.3V tap and output tied to output sense (V_{OUT} = 5V) and $V_{SHUTDOWN}$ ≤ 0.8V.

3. Regulation is measured at constant junction temperature, using pulse testing with a low duty cycle. Changes in output voltage due to heating effects are covered under the specification for thermal regulation.

4. Line regulation for the SPX2945 is tested at 150°C for I_L = 1mA. For T_J = 125°C, line regulation is guaranteed by design.

5. Dropout voltage is defined as the input to output differential at which the output voltage drops 100 mV below its nominal value measured at 1V differential at very low values of programmed output voltage, the minimum input supply voltage of 2V (2.3V over temperature) must be considered.

6. Comparator thresholds are expressed in terms of a voltage differential at the feedback terminal below the nominal reference voltage measured at 6V input. To express these thresholds in terms of output voltage change, multiply by the error amplifier gain = V_{OUT}/V_{REF} = (R1 + R2)/R2. For example, at a programmed output voltage of 5V, the error output is guaranteed to go low when the output drops by 95mV × 5V/1.235 = 384mV. Thresholds remain constant as a percent of V_{OUT} as V_{OUT} is varied, with the dropout warning occurring at typically 5% below nominal, 7.5% guaranteed.

7. $V_{SHUTDOWN}$ ≥ 2V, V_{IN} ≤ 26V, V_{OUT} = 0, Feedback pin tied to 5V/3.3V Tap.

Pin Information

SOT-223 version available. TO-220, TO-263, TO-252, NSOIC versions obsolete

Pin Configuration

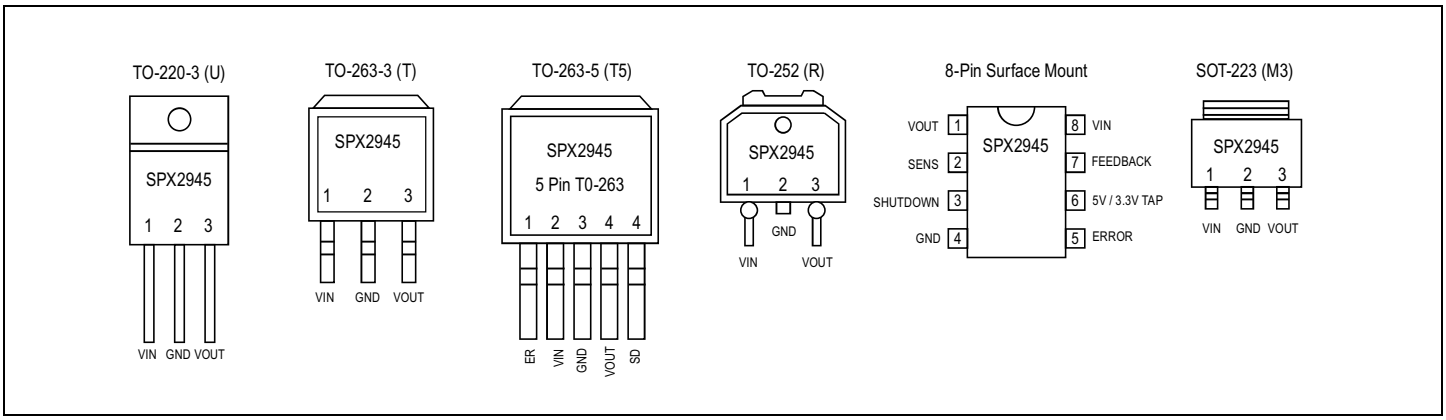

Figure 2: SPX2945 Pin Configuration

Pin Description

Table 4: Pin Description

Pin Number	Pin Name	Description
1	VIN	Input voltage. Bypass to GND with ≥ 2.2µF capacitance.
2	GND	Ground pin. Connect to tab on board.
3	VOUT	Output voltage. Bypass to GND with ≥ 2.2µF capacitance.
Tab	GND	Ground and die attach paddle. Connect to pin 2 in board layout.

Block Diagram

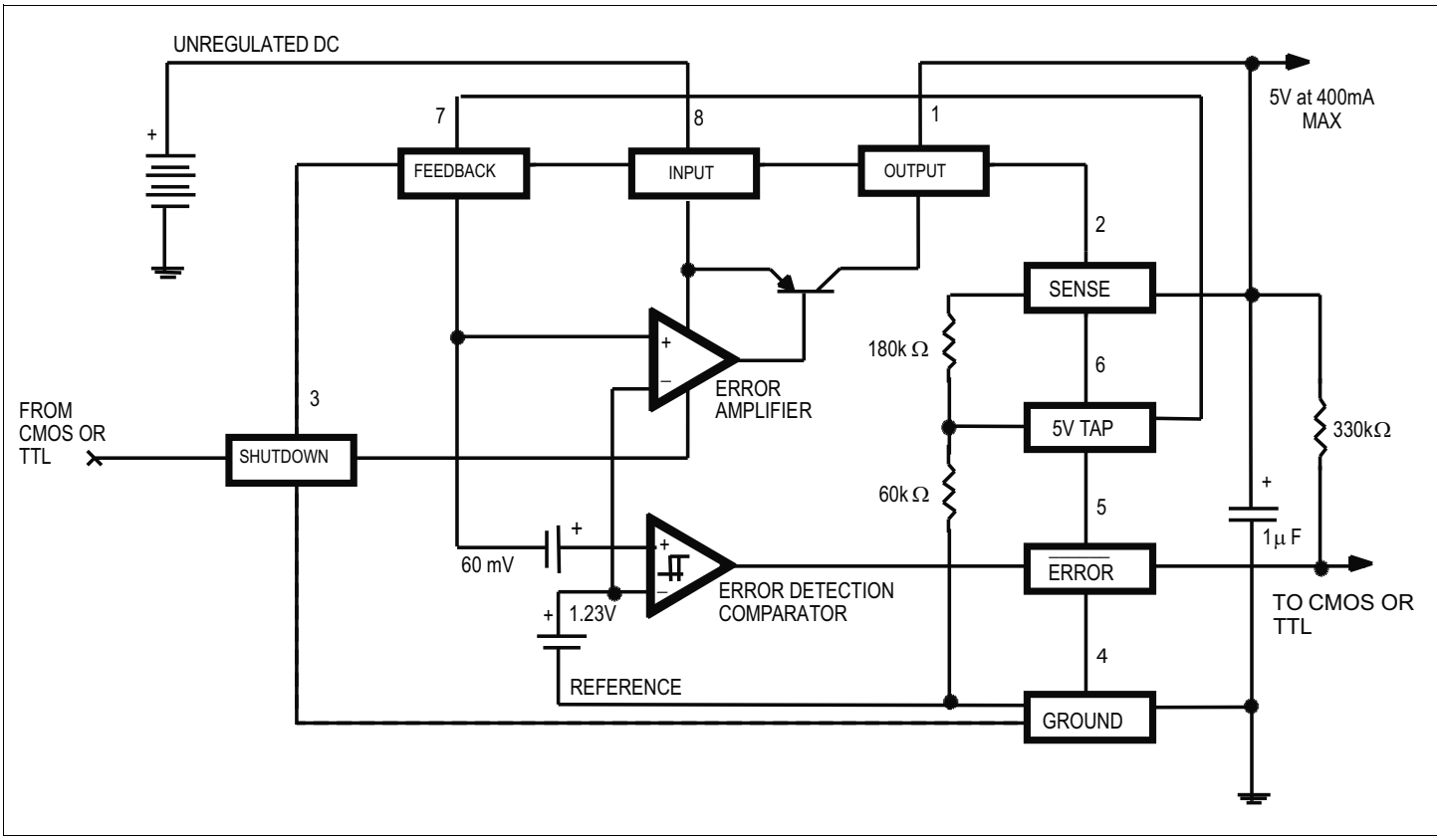

Figure 3: SPX2945 Block Diagram

Application Information

External Capacitors

The stability of the SPX2945 requires a 2.2µF or greater capacitor between output and ground. Oscillation can occur without this capacitor. Most types of tantalum or aluminum electrolytic works as expected here. MaxLinear recommends a solid tantalum lower than –25°C since the aluminum types have electrolytes that freeze at about –30°C. The ESR of about 5Ω or less and resonant frequency above 500kHz are the most important parameters in the value of the capacitor. The capacitor value can be increased with- out limit.

At lower values of output current, less output capacitance is required for stability. For the currents below 10mA the value of the capacitor can be reduced to 0.5µF and 0.15µF for 1mA. More output capacitance needed for the 8-pin version at voltages below 5V since it runs the error amplifier at lower gain. At worst case 4.7µF or greater must be used for the condition of 250mA load at 1.23V output.

The SPX2945, unlike other low dropout regulators remains stable and in regulation with no load in addition to the internal voltage divider. This feature is important in applications like CMOS RAM keep-alive.

If there is more than 10 inches of wire between the input and the AC filter capacitor, or if a battery is used as the input, then a 0.1µF tantalum or aluminum electrolytic capacitor should be placed from the input ground.

Instability can occur if there is stray capacitance to the SPX2945 feedback terminal (pin 7). This can cause more problems when using a higher value of external resistors to set the output voltage.

This problem can be fixed by adding a 100pF capacitor between output and feedback and increasing the output capacitor to at least 3.3µF.

Error Detection Comparator Output

The comparator produces a logic low output whenever the SPX2945 output falls out of regulation by more than around 5%. This is around 60mV offset divided by the 1.235 reference voltage. This trip level remains 5% below normal regardless of the programmed output voltage of the regulator. Figure 4 shows the timing diagram depicting the $\overline{\text{ERROR}}$ signal and the regulator output voltage as the SPX2945 input is ramped up and down. The $\overline{\text{ERROR}}$ signal becomes low at around 1.3V input, and goes high around 5V input (input voltage at which V_{OUT} = 4.75). Since the SPX2945's dropout voltage is load dependent, the input voltage trip point (around 5V) varies with the load current. The output voltage trip point (approx. 4.75V) does not vary with load.

The error comparator has an open-collector output, which requires an external pull-up resistor. Depending on the system requirements the resistor can be returned to 5V output or other supply voltage. In determining the value of this resistor, note that the output is rated to sink 400µA; this value adds to battery drain in a low battery condition. Suggested values range from 100K to 1MΩ. If the output is unused this resistor is not required.

Reducing Output Noise

It can be an advantage to reduce the AC noise present at the output. One way is to reduce the regulator bandwidth by increasing the size of the output capacitor. This is the only way that noise can be reduced on the 3 lead SPX2945 but is relatively inefficient, as increasing the capacitor from 1µF to 220µF only decreases the noise from 430µV to 160µV Vrms for a 100kHz bandwidth at 5V output. Noise can also be reduced fourfold by a bypass capacitor across R_1, since it reduces the high frequency gain from 4 to unity. Pick:

$C_{BYPASS} \cong 1/2\pi R1 \times 200Hz$

or choose 0.01µF. When doing this, the output capacitor must be increased to 3.3µF to maintain stability. These changes reduce the output noise from 430µV to 100µV Vrms for a 100kHz bandwidth at 5V output. With the bypass capacitor added, noise no longer scales with output voltage so that improvements are more dramatic at higher output voltages.

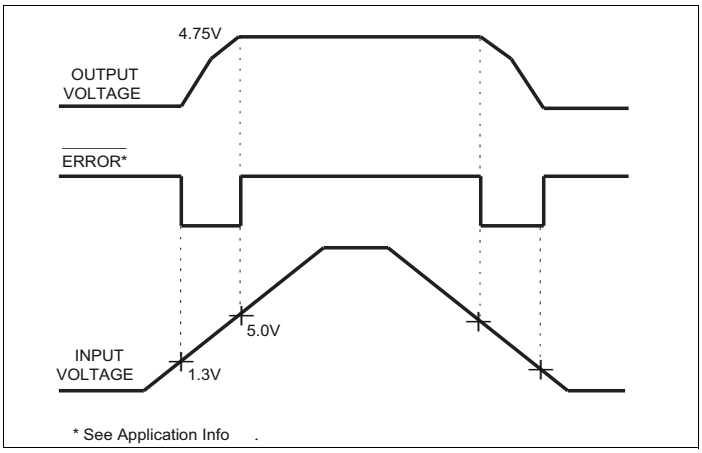

Figure 4: $\overline{\text{ERROR}}$ Output Timing

Mechanical Dimensions

3-Pin TO-252

TO-252 version obsolete

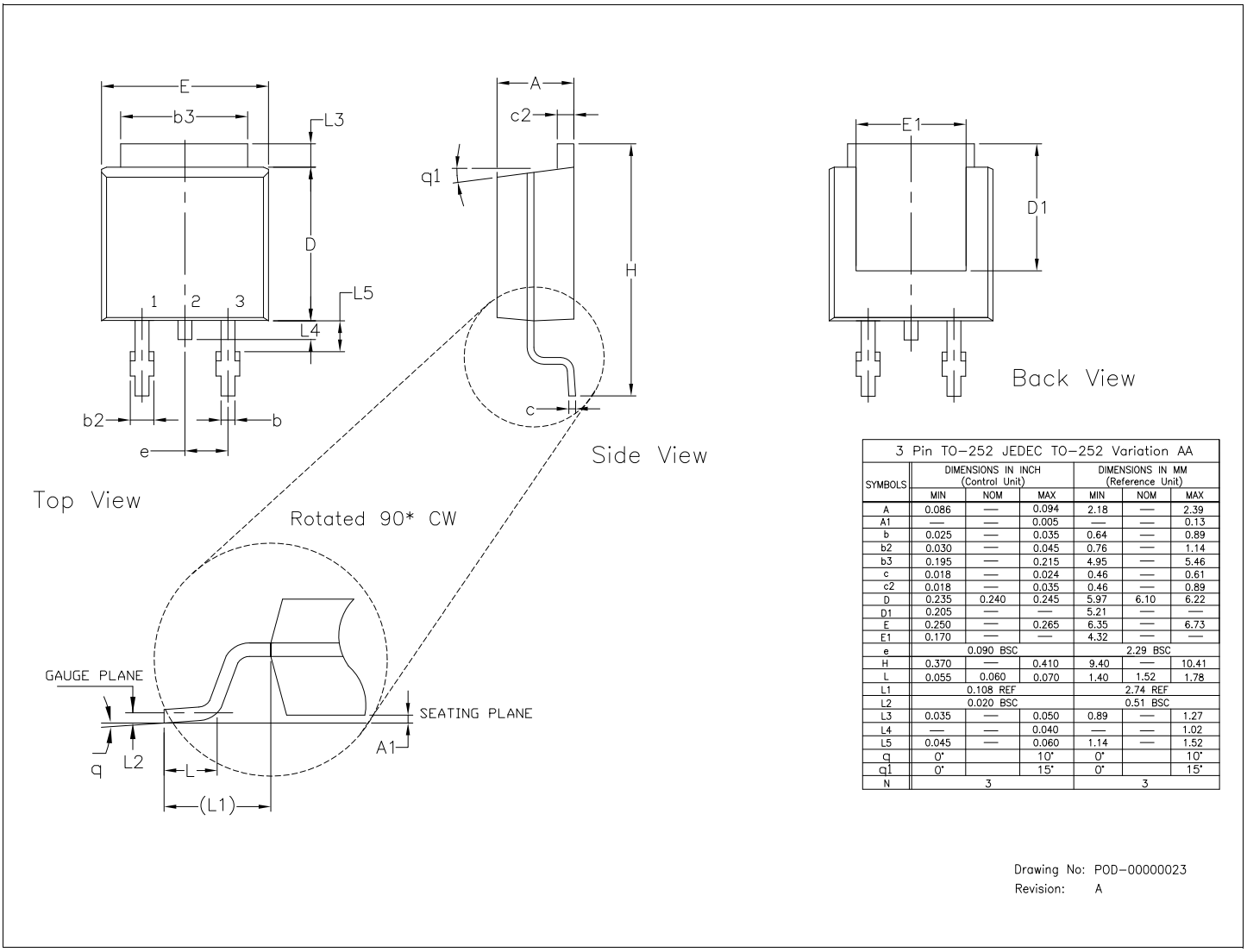

3 Pin TO-252 JEDEC TO-252 Variation AA						
SYMBOLS	DIMENSIONS IN INCH (Control Unit)			DIMENSIONS IN MM (Reference Unit)		
	MIN	NOM	MAX	MIN	NOM	MAX
A	0.086	—	0.094	2.18	—	2.39
A1	—	—	0.005	—	—	0.13
b	0.025	—	0.035	0.64	—	0.89
b2	0.030	—	0.045	0.76	—	1.14
b3	0.195	—	0.215	4.95	—	5.46
c	0.018	—	0.024	0.46	—	0.61
c2	0.018	—	0.035	0.46	—	0.89
D	0.235	0.240	0.245	5.97	6.10	6.22
D1	0.205	—	—	5.21	—	—
E	0.250	—	0.265	6.35	—	6.73
E1	0.170	—	—	4.32	—	—
e	0.090 BSC			2.29 BSC		
H	0.370	—	0.410	9.40	—	10.41
L	0.055	0.060	0.070	1.40	1.52	1.78
L1	0.108 REF			2.74 REF		
L2	0.020 BSC			0.51 BSC		
L3	0.035	—	0.050	0.89	—	1.27
L4	—	—	0.040	—	—	1.02
L5	0.045	—	0.060	1.14	—	1.52
q	0°		10°	0°		10°
q1	0°		15°	0°		15°
N	3			3		

Drawing No: POD-00000023
Revision: A

Figure 5: SPX2945 Mechanical Dimensions–3-Pin TO-252

3-Pin TO-220

TO-220 version obsolete

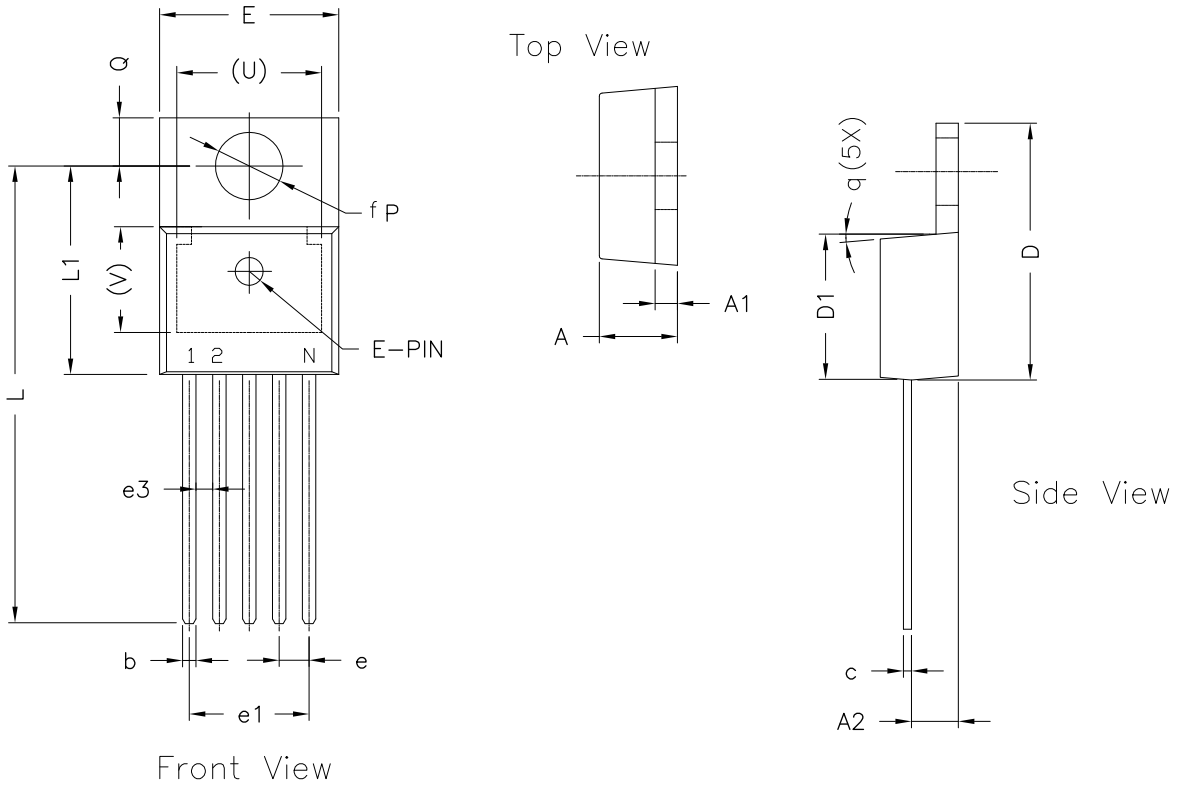

3 Pin TO–220 (Option 1)* JEDEC TO–220–AB				
SYMBOLS	DIMENSIONS IN INCH (Control Unit)		DIMENSIONS IN MM (Reference Unit)	
	MIN	MAX	MIN	MAX
A	0.140	0.190	3.56	4.82
A1	0.020	0.055	0.51	1.40
A2	0.080	0.115	2.03	2.92
b	0.015	0.040	0.38	1.02
c	0.014	0.024	0.36	0.61
D	0.560	0.650	14.22	16.51
D1	0.330	0.355	8.38	9.02
D2	0.480	0.507	12.19	12.88
E	0.380	0.420	9.65	10.67
E1	0.270	0.350	6.86	8.89
e	0.100 BSC		2.54 BSC	
e1	0.200 BSC		5.08 BSC	
H1	0.230	0.270	5.84	6.86
L	0.500	0.580	12.70	14.73
L1	—	0.250	—	6.35
P	0.139	0.156	3.53	3.96
Q	0.103	0.113	2.62	2.87
V	0.240 REF		6.10 REF	
q	3°	7°	3°	7°
N	3		3	

* Refer to product datasheet for POD option being used

3 Pin TO–220 (Option 2)*				
SYMBOLS	DIMENSIONS IN INCH (Control Unit)		DIMENSIONS IN MM (Reference Unit)	
	MIN	MAX	MIN	MAX
A	0.140	0.190	3.56	4.82
A1	0.020	0.055	0.51	1.40
A2	0.080	0.115	2.03	2.92
b	0.015	0.040	0.38	1.02
c	0.014	0.024	0.36	0.61
D	0.560	0.650	14.22	16.51
D1	0.330	0.355	8.38	9.02
D2	0.480	0.507	12.19	12.88
E	0.380	0.420	9.65	10.67
E1	0.270	0.350	6.86	8.89
e	0.100 BSC		2.54 BSC	
e1	0.200 BSC		5.08 BSC	
H1	0.230	0.270	5.84	6.86
L	0.500	0.580	12.70	14.73
L1	0.345 BSC		8.76 BSC	
P	0.139	0.156	3.53	3.96
Q	0.103	0.113	2.62	2.87
V	0.240 REF		6.10 REF	
q	3°	7°	3°	7°
N	3		3	

* Refer to product datasheet for POD option being used

5 Pin TO–220 JEDEC TS–001 Variation AA				
SYMBOLS	DIMENSIONS IN INCH (Control Unit)		DIMENSIONS IN MM (Reference Unit)	
	MIN	MAX	MIN	MAX
A	0.165	0.190	4.19	4.82
A1	0.035	0.055	0.89	1.39
A2	0.085	0.115	2.16	2.92
b	0.020	0.040	0.51	1.01
c	0.012	0.025	0.31	0.63
D	0.570	0.625	14.48	15.87
D1	0.330	0.370	8.39	9.39
E	0.390	0.415	9.91	10.54
e	0.067 BSC		1.70 BSC	
e1	0.263	0.273	6.68	6.93
e3	0.030	0.040	0.76	1.02
L	0.945	1.045	24.00	26.54
L1	0.465	0.539	11.81	13.69
P	0.139	0.156	3.53	3.96
Q	0.103	0.113	2.62	2.87
U	0.300 REF		7.62 REF	
V	0.240 REF		6.10 REF	
q	3°	7°	3°	7°
N	5		5	

Drawing No: POD–00000020
Revision: A

Figure 6: SPX2945 Mechanical Dimensions–5-Pin TO-220

3/5-Pin TO-263

TO-263 versions obsolete

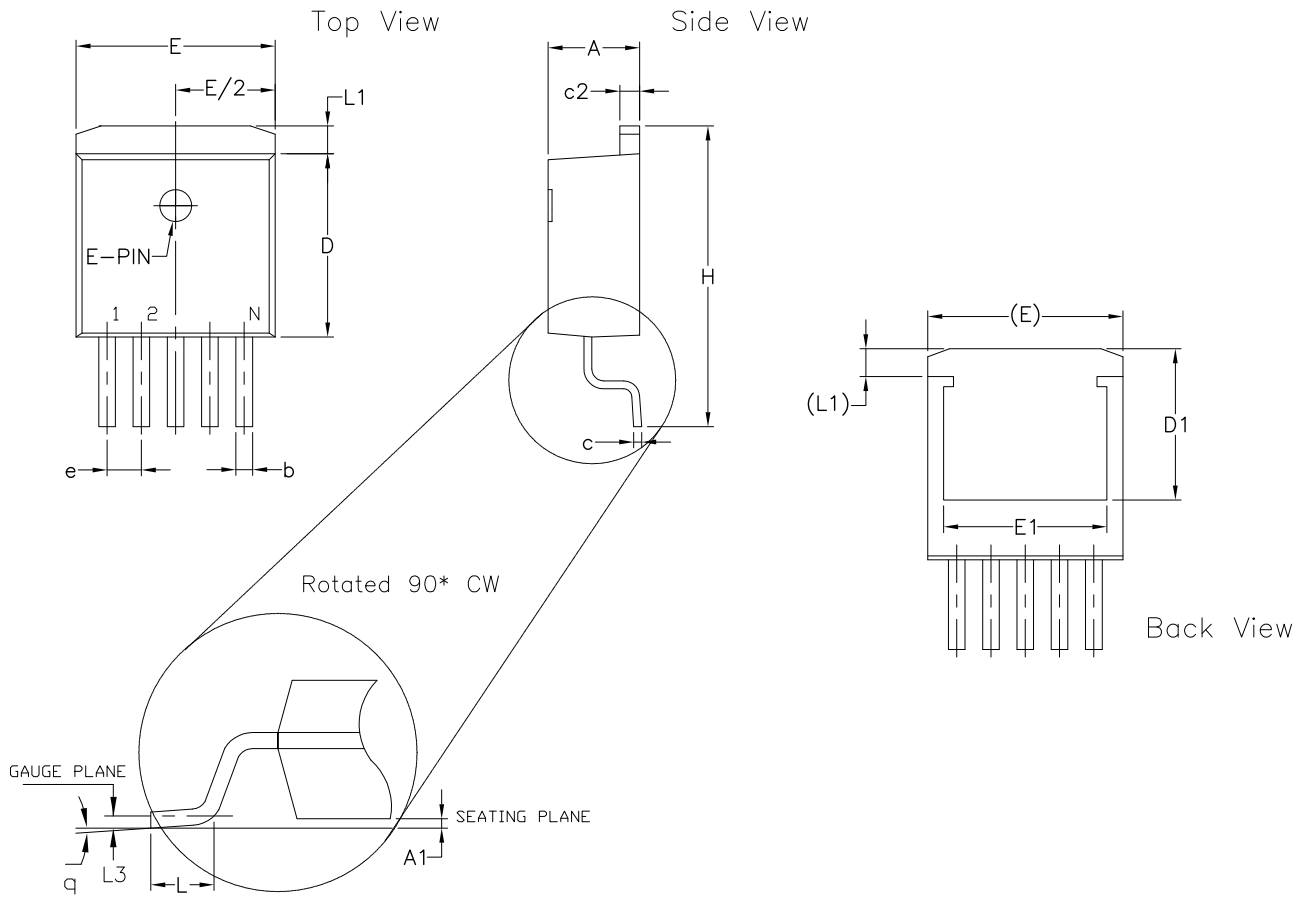

3 Pin TO–263 JEDEC TO–263 Variation AA						
SYMBOLS	DIMENSIONS IN INCH (Control Unit)			DIMENSIONS IN MM (Reference Unit)		
	MIN	NOM	MAX	MIN	NOM	MAX
A	0.160	—	0.190	4.06	—	4.83
A1	0.000	—	0.010	0.00	—	0.25
b	0.020	—	0.039	0.51	—	0.99
b2	0.045	—	0.070	1.14	—	1.78
c	0.015	—	0.029	0.38	—	0.74
c2	0.045	—	0.065	1.14	—	1.65
D	0.330	—	0.380	8.38	—	9.65
D1	0.270	—	—	6.86	—	—
E	0.380	—	0.420	9.65	—	10.67
E1	0.245	—	—	6.22	—	—
e	0.100 BSC			2.54 BSC		
H	0.575	—	0.625	14.61	—	15.88
L	0.070	—	0.110	1.78	—	2.79
L1	—	—	0.066	—	—	1.68
L3	0.010 BSC			0.25 BSC		
q	0°		8°	0°		8°
N	3			3		

5 Pin TO–263 JEDEC TO–263 Variation BA						
SYMBOLS	DIMENSIONS IN INCH (Control Unit)			DIMENSIONS IN MM (Reference Unit)		
	MIN	NOM	MAX	MIN	NOM	MAX
A	0.160	—	0.190	4.06	—	4.83
A1	0.000	—	0.010	0.00	—	0.25
b	0.020	—	0.039	0.51	—	0.99
c	0.015	—	0.029	0.38	—	0.74
c2	0.045	—	0.065	1.14	—	1.65
D	0.330	—	0.380	8.38	—	9.65
D1	0.270	—	—	6.86	—	—
E	0.380	—	0.420	9.65	—	10.67
E1	0.245	—	—	6.22	—	—
e	0.067 BSC			1.70 BSC		
H	0.575	—	0.625	14.61	—	15.88
L	0.070	—	0.110	1.78	—	2.79
L1	—	—	0.066	—	—	1.68
L3	0.010 BSC			0.25 BSC		
q	0°		8°	0°		8°
N	5			5		

Drawing No: POD–00000021
Revision: A

Figure 7: SPX2945 Mechanical Dimensions–3/5-Pin TO-263

8-Pin NSOIC

NSOIC version obsolete

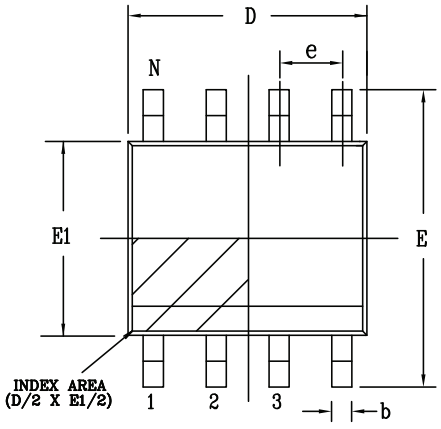

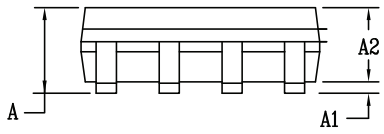

Side View

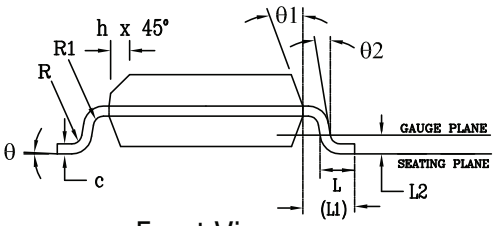

Front View

PACKAGE OUTLINE NSOIC .150" BODY JEDEC MS–012 VARIATION AA						
SYMBOLS	COMMON DIMENSIONS IN MM (Control Unit)			COMMON DIMENSIONS IN INCH (Reference Unit)		
	MIN	NOM	MAX	MIN	NOM	MAX
A	1.35	—	1.75	0.053	—	0.069
A1	0.10	—	0.25	0.004	—	0.010
A2	1.25	—	1.65	0.049	—	0.065
b	0.31	—	0.51	0.012	—	0.020
c	0.17	—	0.25	0.007	—	0.010
E	6.00 BSC			0.236 BSC		
E1	3.90 BSC			0.154 BSC		
e	1.27 BSC			0.050 BSC		
h	0.25	—	0.50	0.010	—	0.020
L	0.40	—	1.27	0.016	—	0.050
L1	1.04 REF			0.041 REF		
L2	0.25 BSC			0.010 BSC		
R	0.07	—	—	0.003	—	—
R1	0.07	—	—	0.003	—	—
q	0°	—	8°	0°	—	8°
q1	5°	—	15°	5°	—	15°
q2	0°	—	—	0°	—	—
D	4.90 BSC			0.193 BSC		
N	8					

Drawing No: POD-00000108

Revision: A

Figure 8: SPX2945 Mechanical Dimensions–8-Pin NSOIC

3-Pin SOT-223

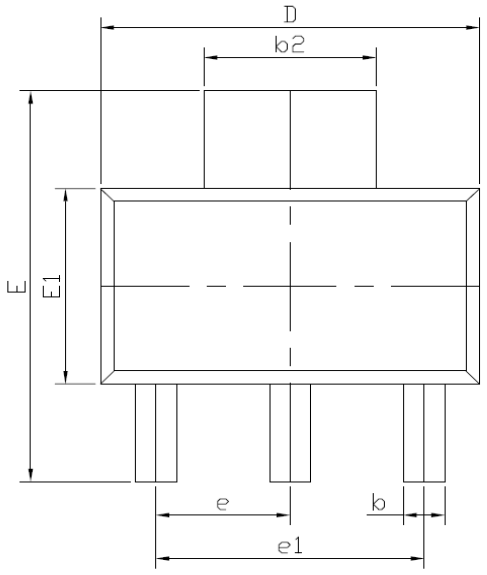

TOP VIEW

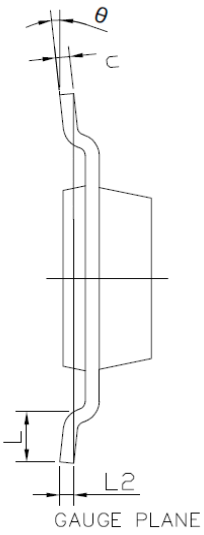

SIDE VIEW 1

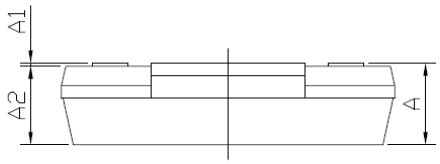

SIDE VIEW 2

DIM / SYMBOL	MIN.	NOM.	MAX.
A	–	–	1.80
A1	0.02	–	0.10
A2	1.50	1.60	1.70
b	0.66	0.76	0.84
b2	2.90	3.00	3.10
c	0.23	0.30	0.35
D	6.30	6.50	6.70
E	6.70	7.00	7.30
E1	3.30	3.50	3.70
e	2.30 BSC		
e1	4.60 BSC		
L	0.75	–	–
L2	0.25 BSC		
θ	0°	–	10°
N	3		

TERMINAL DETAILS

NOTE : ALL DIMENSIONS ARE IN MILLIMETERS, ANGLES ARE IN DEGREES.

Drawing No. : POD-00000098

Revision: D

Figure 9: SPX2945 Mechanical Dimensions–3-Pin SOT-223

Land Pattern and Recommended Stencil

3-Pin SOT-223

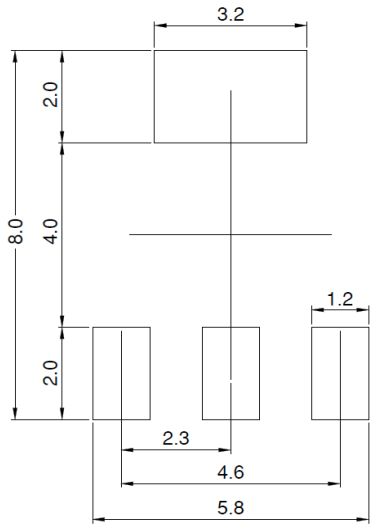

TYPICAL RECOMMENDED LAND PATTERN

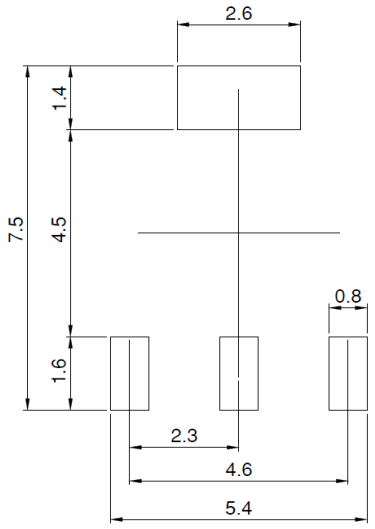

TYPICAL RECOMMENDED STENCIL

NOTE : ALL DIMENSIONS ARE IN MILLIMETERS, ANGLES ARE IN DEGREES.

Drawing No. : POD-00000098

Revision: D

Figure 10: SPX2945 Land Pattern and Recommended Stencil–3-Pin SOT-223

Ordering Information

Table 5: Ordering Information

Ordering Part Number	Operating Temperature Range	Accuracy	Output Voltage	Package
SPX2945M3-L-3-3/TR	–40°C ≤ T_J ≤ 125°C	1%	3.3V	3-Pin SOT-223

Note: For more information about part numbers, as well as the most up-to-date ordering information and additional information on environmental rating, go to www.maxlinear.com/SPX2945.

MaxLinear, Inc.
5966 La Place Court, Suite 100
Carlsbad, CA 92008
Tel.: +1 (760) 692-0711
Fax: +1 (760) 444-8598

www.maxlinear.com

The content of this document is furnished for informational use only, is subject to change without notice, and should not be construed as a commitment by MaxLinear, Inc. MaxLinear, Inc. assumes no responsibility or liability for any errors or inaccuracies that may appear in the informational content contained in this document. Complying with all applicable copyright laws is the responsibility of the user. Without limiting the rights under copyright, no part of this document may be reproduced into, stored in, or introduced into a retrieval system, or transmitted in any form or by any means (electronic, mechanical, photocopying, recording, or otherwise), or for any purpose, without the express written permission of MaxLinear, Inc.

EXCEPT AS OTHERWISE PROVIDED EXPRESSLY IN WRITING BY MAXLINEAR, AND TO THE MAXIMUM EXTENT PERMITTED BY LAW: (A) THE MAXLINEAR PRODUCTS ARE PROVIDED ON AN “AS IS” BASIS WITHOUT REPRESENTATIONS OR WARRANTIES OF ANY KIND, INCLUDING WITHOUT LIMITATION ANY IMPLIED OR STATUTORY WARRANTIES AND ANY WARRANTIES OF MERCHANTABILITY, FITNESS FOR A PARTICULAR PURPOSE, NON-INFRINGEMENT, OR TITLE; AND (B) MAXLINEAR DOES NOT GUARANTEE THAT THE PRODUCTS WILL BE FREE OF ERRORS OR DEFECTS. MAXLINEAR PRODUCTS SHOULD NOT BE USED IN ANY EMERGENCY, SECURITY, MILITARY, LIFE-SAVING, OR OTHER CRITICAL USE CASE WHERE A FAILURE OR MALFUNCTION COULD CAUSE PERSONAL INJURY OR DEATH, OR DAMAGE TO OR LOSS OF PROPERTY. USERS ASSUME ALL RISK FOR USING THE MAXLINEAR PRODUCTS IN SUCH USE CASE. CUSTOMERS AND USERS ARE SOLELY RESPONSIBLE FOR USING THEIR OWN SKILL AND JUDGMENT TO DETERMINE WHETHER MAXLINEAR PRODUCTS ARE SUITABLE FOR THE INTENDED USE CASE.

MaxLinear, Inc. may have patents, patent applications, trademarks, copyrights, or other intellectual property rights covering subject matter in this document. Except as expressly provided in any written license agreement from MaxLinear, Inc., the furnishing of this document does not give you any license to these patents, trademarks, copyrights, or other intellectual property.

MaxLinear, the MaxLinear logo, any other MaxLinear trademarks (including but not limited to MxL, Full-Spectrum Capture, FSC, AirPHY, Puma, AnyWAN, VectorBoost, MXL WARE, and Panther), and the MaxLinear logo on the products sold are all property of MaxLinear, Inc. or one of MaxLinear's subsidiaries in the U.S.A. and other countries. All rights reserved.

All third-party products, company names and logos are trademarks™ or registered® trademarks and remain the property of their respective holders/owners. Use of such marks does not imply any affiliation with, sponsorship or endorsement by the owners/holders of such trademarks. All references by MaxLinear to third party trademarks are intended to constitute nominative fair use under applicable trademark laws.

The URLs provided are for informational purposes only; they do not constitute an endorsement or an approval by MaxLinear of any of the products or services of the corporation or organization or individual. MaxLinear bears no responsibility for the accuracy, legality or content of the external site or for that of subsequent links. Contact the external site for answers to questions regarding its content.

© 2025 MaxLinear, Inc. All rights reserved.

ENTEGRECİ

Bu belge www.entegreci.com üzerinden sunulmaktadır.

Elektronik komponent tedarikinde Entegreci

Entegreci, Eskişehir merkezli, Türkiye geneline satış yapan bir elektronik komponent mağazasıdır. Entegreler (IC), mikrodenetleyiciler, transistörler, diyotlar, pasif elemanlar, konnektörler, modüller ve geliştirme kartları tek adetten seri üretim adetlerine kadar satılır. Ürün sayfalarında güncel stok durumunu, fiyatı ve datasheet bağlantısını bulabilirsiniz.

Parça koduyla arama

Üretici parça numarasını yazın; stok ve fiyatı hemen görün.

www.entegreci.com

Ürün kategorileri

Entegreden kapasitöre tüm elektronik komponent kategorileri.

Kategorilere göz atın

Üreticiler

Aradığınız üreticinin ürünlerini tek sayfada inceleyin.

Üreticileri görün

Toplu alım ve teklif

Listede olmayan ya da yüksek adetli parçalar için teklif isteyin.

Teklif isteyin

www.entegreci.com | **destek@entegreci.com** | **0850 305 90 34**

Entegreci is an online electronic components store based in Türkiye. Search by manufacturer part number to see stock, prices and datasheets for integrated circuits, microcontrollers, transistors, passive components and connectors, or request a quote for parts that are not listed.

Bu sayfa Entegreci tarafından eklenmiştir. Belgenin önceki sayfaları asıl yayıncısına aittir ve içeriği değiştirilmemiştir; en güncel sürüm için belgenin yayıncısına başvurun.