INA701 40V, 16-Bit, I²C Output Digital Power Monitor in WCSP With 5mΩ EZShunt™ Technology

1 Features

- Low loss integrated shunt resistor
  - Internal resistance: 5mΩ at T_A = 25°C
  - Current rating: ±6A at T_A = 25°C
- High-resolution, 16-bit delta-sigma ADC
  - Wide common-mode range: –0.3V to +40V
  - Reports current, bus voltage, power, internal temperature, energy, and charge
  - Programmable conversion time and averaging
- Current monitoring accuracy:
  - Total Measurement Error: ±0.5% at 1A
  - Offset current: ±0.6mA (maximum)
  - Gain error: ±0.5% (maximum at 1A)
  - Gain error drift: ±50ppm/°C (maximum)
- Power monitoring accuracy:
  - 0.85% accuracy at 1A
- Energy and Charge accuracy:
  - 1.35% accuracy at 1A
- Internal monitoring and fault detection
- Precision oscillator: ±0.5% (maximum)
- 2.94MHz High-Speed I²C interface with 4 pin-selectable addresses
- Operates from a 2.7V to 5.5V supply
  - Operational current: 640µA (typical)
  - Shutdown current: 5µA (maximum)

2 Applications

- Notebook computers
- Smartphones
- Industrial battery packs
- Smart network interface cards (NIC)
- Hardware accelerator cards

3 Description

The INA701 is a digital power monitor with an integrated shunt resistor along with a 16-bit delta-sigma ADC specifically designed for current sensing applications. The device can measure full-scale currents up to ±6.225A, over the common-mode voltage range of –0.3V to +40V.

The INA701 reports current, bus voltage, die temperature, power, energy and charge accumulation with a precision ±0.5% integrated oscillator, all while performing the needed calculations in the background. The integrated temperature sensor is ±3°C accurate over the junction temperature range.

The low offset and gain error drift of the INA701 allows use in systems that do not undergo temperature calibration during manufacturing.

The device features selectable ADC conversion times from 50µs to 4.12ms as well as sample averaging from 1x to 1024x, which further helps reduce the noise of the measured data and allows for optimization of overcurrent detection windows.

The device is available in a tiny PowerWCSP (DSBGA) package to minimize the solution size and maximize thermal performance.

Package Information

PART NUMBER	PACKAGE(1)	PACKAGE SIZE(2)
INA701	YWF (PowerWCSP, 8)	1.319mm × 1.239mm

(1) For all available packages, see the package option addendum at the end of the data sheet.
(2) The package size (length × width) is a nominal value and includes pins, where applicable.

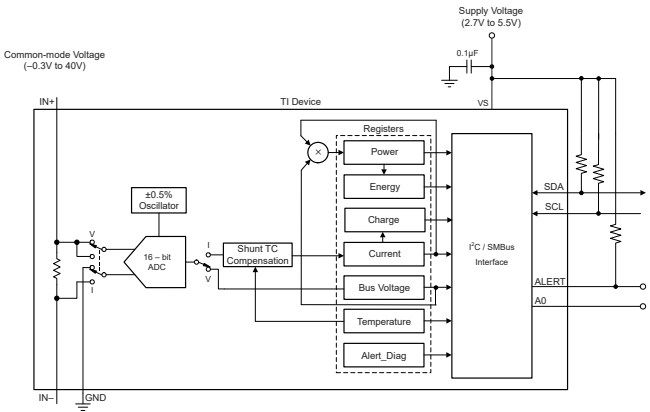

Simplified Block Diagram

An IMPORTANT NOTICE at the end of this data sheet addresses availability, warranty, changes, use in safety-critical applications, intellectual property matters and other important disclaimers. PRODUCTION DATA.

Table of Contents

1 Features....1
2 Applications....1
3 Description....1
4 Pin Configuration and Functions....3
5 Specifications....4
5.1 Absolute Maximum Ratings....4
5.2 ESD Ratings....4
5.3 Recommended Operating Conditions....4
5.4 Thermal Information....4
5.5 Electrical Characteristics....5
5.6 Timing Requirements (I^2C)....7
5.7 Timing Diagram....7
5.8 Typical Characteristics....8
6 Detailed Description....12
6.1 Overview....12
6.2 Functional Block Diagram....12
6.3 Feature Description....12
6.4 Device Functional Modes....20
6.5 Programming....22
6.6 Register Maps....24
7 Application and Implementation....33
7.1 Application Information....33
7.2 Typical Application....36
8 Power Supply Recommendations....39
9 Layout....39
9.1 Layout Guidelines....39
9.2 Layout Example....39
10 Device and Documentation Support....40
10.1 Documentation Support....40
10.2 Receiving Notification of Documentation Updates....40
10.3 Support Resources....40
10.4 Trademarks....40
10.5 Electrostatic Discharge Caution....40
10.6 Glossary....40
11 Revision History....40
12 Mechanical, Packaging, and Orderable Information....40

Copyright © 2025 Texas Instruments Incorporated

4 Pin Configuration and Functions

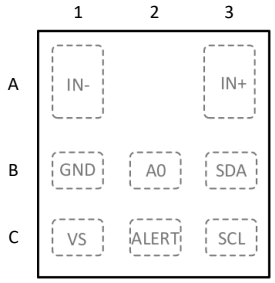

Figure 4-1. YWF Package 8-Pin PowerWCSP Top View

Table 4-1. Pin Functions

PIN		TYPE	DESCRIPTION
NO.	NAME		
A1	IN–	Analog input	Negative input to the device. For high-side applications, connect to supply side of the load. For low-side applications, connect to ground.
A3	IN+	Analog input	Positive input to the device. For high-side applications, connect to the bus power supply. For low-side applications, connect to ground side of the load.
B1	GND	Ground	Ground.
B2	A0	Digital input	I^2C address pin. Connect to GND, SCL, SDA, or VS. See Table 6-2 for a list of available device addresses.
B3	SDA	Digital input/output	Open-drain bidirectional I^2C data.
C1	VS	Power supply	Power supply, 2.7V to 5.5V.
C2	ALERT	Digital output	Open-drain alert output, default state is active low.
C3	SCL	Digital input	Open-drain I^2C clock input.

Copyright © 2025 Texas Instruments Incorporated

5 Specifications

5.1 Absolute Maximum Ratings

over operating free-air temperature range (unless otherwise noted)(1)

		MIN	MAX	UNIT
V_S	Supply voltage		6	V
V_{IN+}, V_{IN-} (2)	Common mode voltage	–0.3	42	V
V_{ALERT}	ALERT	–0.3	Vs + 0.3	V
V_{IO}	SDA, SCL, A0	–0.3	6	V
I_{IN}	Input current into any pin, excluding IN+ and IN–		5	mA
I_{OUT}	Digital output current		10	mA
T_J	Junction temperature		125	°C
T_{stg}	Storage temperature	–65	150	°C

(1) Operation outside the Absolute Maximum Ratings may cause permanent device damage. Absolute Maximum Ratings do not imply functional operation of the device at these or any other conditions beyond those listed under Recommended Operating Conditions. If used outside the Recommended Operating Conditions but within the Absolute Maximum Ratings, the device may not be fully functional, and this may affect device reliability, functionality, performance, and shorten the device lifetime.
(2) VIN+ and VIN– are the voltages at the IN+ and IN– pins, respectively.

5.2 ESD Ratings

			VALUE	UNIT
$V_{(ESD)}$	Electrostatic discharge	Human body model (HBM), per ANSI/ESDA/JEDEC JS-001, all pins(1)	±2000	V
		Charged device model (CDM), per ANSI/ESDA/JEDEC JS-002, all pins(2)	±1000	

(1) JEDEC document JEP155 states that 500V HBM allows safe manufacturing with a standard ESD control process.
(2) JEDEC document JEP157 states that 250V CDM allows safe manufacturing with a standard ESD control process.

5.3 Recommended Operating Conditions

over operating free-air temperature range (unless otherwise noted)

		MIN	NOM	MAX	UNIT
V_{CM}	Common-mode input voltage	–0.3		40	V
V_S	Operating supply voltage	2.7		5.5	V
T_A	Specified ambient temperature	–40		105	°C

5.4 Thermal Information

THERMAL METRIC(1)		INA701 YWF (PowerWCSP) 8 PINS	UNIT
$R_{\theta JA}$	Junction-to-ambient thermal resistance	108.4	°C/W
$R_{\theta JC(top)}$	Junction-to-case (top) thermal resistance	0.7	°C/W
$R_{\theta JB}$	Junction-to-board thermal resistance	30.8	°C/W
Ψ_{JT}	Junction-to-top characterization parameter	0.2	°C/W
Y_{JB}	Junction-to-board characterization parameter	30.8	°C/W
$R_{\theta JC(bot)}$	Junction-to-case (bottom) thermal resistance	n/a	°C/W

(1) For more information about traditional and new thermal metrics, see the Semiconductor and IC Package Thermal Metrics application note.

Copyright © 2025 Texas Instruments Incorporated

5.5 Electrical Characteristics

at T_A = 25 °C, V_S = 3.3V, I_{SENSE} = 0A, V_{CM} = $V_{IN–}$ = V_{BUS}= 12V (unless otherwise noted)

PARAMETER		TEST CONDITIONS	MIN	TYP	MAX	UNIT
INPUT						
CMRR	Common-mode rejection	0V < V_{CM} < 40V, T_A = –40°C to +105°C		±1	±30	µA/V
I_{os}	Input offset current	T_{CT} > 280µs		±0.190	±0.6	mA
dI_{os}/dT	Input offset current drift	T_A = –40°C to +105°C		±20	±100	µA/°C
PSRR	Input offset current vs power supply	V_S = 2.7V to 5.5V, T_A = –40°C to +105°C		±0.02	±0.28	mA/V
V_{os_bus}	V_{BUS} offset voltage			±6.2	±15	mV
dV_{os}/dT	V_{BUS} offset voltage drift	T_A = –40°C to +105°C		±4	±40	µV/°C
PSRR	V_{BUS} offset voltage vs power supply	V_S = 2.7V to 5.5V		±1.1		mV/V
DC ACCURACY						
G_{SERR}	System current sense gain error (1)	I_{SENSE} = 1A, T_A = 25°C		±0.1	±0.5	%
		I_{SENSE} = 3A, T_A = 25°C		±0.5		%
G_{S_DRFT}	System current sense gain error drift	–40°C ≤ T_A ≤ 105°C		±15	±50	ppm/°C
G_{BERR}	V_{BUS} voltage gain error	V_{CM} = 0V to 40V, T_A = 25°C		±0.05	±0.2	%
G_{B_DRFT}	V_{BUS} voltage gain error drift	–40°C ≤ T_A ≤ 105°C			±30	ppm/°C
I_{BUS}	V_{BUS} leakage current	Device enabled with active conversions		12		µA
P_{TME}	Power total measurement error (TME)	T_A = 25°C, V_{CM} = 12V, I_{LOAD} = 1A		±0.15	±0.85	%
E_{TME}	Energy and charge TME	T_A = 25°C, V_{CM} = 12V, I_{LOAD} = 1A		±0.25	±1.35	%
	ADC resolution			16		Bits
	1 LSB step size	Current		190		µA
		Bus voltage		3.125		mV
		Temperature		125		m°C
		Power		38		µW
		Energy		0.608		mJ
		Charge		11.875		µC
T_{CT}	ADC conversion-time(2)	Conversion time field = 0h		50		µs
		Conversion time field = 1h		84		
		Conversion time field = 2h		150		
		Conversion time field = 3h		280		
		Conversion time field = 4h		540		
		Conversion time field = 5h		1052		
		Conversion time field = 6h		2074		
		Conversion time field = 7h		4120		
INL	Integral Non-Linearity	Internal ADC		±5		m%
CLOCK SOURCE						
F_{OSC}	Internal oscillator frequency			1		MHz
OSC_{TOL}	Internal oscillator frequency tolerance	T_A = 25°C		±0.07	±0.5	%
		T_A = –40°C to +105°C		±0.14	±1	%

Copyright © 2025 Texas Instruments Incorporated

at T_A = 25 °C, V_S = 3.3V, I_{SENSE} = 0A, V_{CM} = $V_{IN–}$ = V_{BUS}= 12V (unless otherwise noted)

PARAMETER		TEST CONDITIONS	MIN	TYP	MAX	UNIT
TEMPERATURE SENSOR						
	Measurement range		–40		+125	°C
	Temperature accuracy	T_J = 25°C		+1.3	±2.5	°C
		T_J= –40°C to +125°C		+1.5	±3	°C
INTEGRATED SHUNT						
	Internal kelvin resistance	T_A = 25°C		5		mΩ
	Pin to pin package resistance	IN+ to IN–, T_A = 25°C	5.6	7	8.4	mΩ
	Maximum shunt current(3)	T_A = 25°C			±6	A
		T_A = 85°C			±5	A
	Short time overload change	I_{SENSE} = 12A for 5 seconds		±0.01		%
	Change due to temperature cycling	–55°C ≤ T_J ≤ 125°C, 700 cycles		±0.2		%
	Resistance change to solder heat	260°C solder, 10s		±0.03		%
	Load life change	1000 hours, T_J = 125°C, I_{SENSE} = 4A, 100% loading		±0.1		%
	High temperature exposure change	1000 hours, T_A = 150°C, unbiased		±0.7		%
	Cold temperature storage change	24 hours, T_A = –65°C, unbiased		±0.2		%
POWER SUPPLY						
V_S	Supply voltage		2.7		5.5	V
I_Q	Quiescent current	V_{SENSE} = 0V		640	700	µA
		V_{SENSE} = 0V, T_A = –40°C to +105°C			1.1	mA
I_{QSD}	Quiescent current, shutdown	Shutdown mode		2.8	5	µA
T_{POR}	Device start-up time	Power-up (NPOR)		300		µs
		From shutdown mode		60		
DIGITAL INPUT / OUTPUT						
V_{IH}	Logic input level, high	SDA, SCL	1.2		5.5	V
V_{IL}	Logic input level, low		GND		0.4	V
V_{OL}	Logic output level, low	I_{OL} = 3mA	GND		0.4	V
I_{IO_LEAK}	Digital leakage input current	0 ≤ V_{IN} ≤ V_S	–1		1	µA

(1) Includes solder down and silicon lifetime shifts. Shifts in the shunt are not included; see the Load Life specification for shunt aging shifts.
(2) Subject to oscillator accuracy and drift
(3) See Figure 6-4 for additional current limitations

Copyright © 2025 Texas Instruments Incorporated

5.6 Timing Requirements (I^2C)

		MIN	NOM	MAX	UNIT
I^2C BUS (FAST MODE)					
$F_{(SCL)}$	I^2C clock frequency	1		400	kHz
$t_{(BUF)}$	Bus free time between STOP and START conditions	600			ns
$t_{(HDSTA)}$	Hold time after a repeated START condition. After this period, the first clock is generated.	100			ns
$t_{(SUSTA)}$	Repeated START condition setup time	100			ns
$t_{(SUSTO)}$	STOP condition setup time	100			ns
$t_{(HDDAT)}$	Data hold time	10		900	ns
$t_{(SUDAT)}$	Data setup time	100			ns
$t_{(LOW)}$	SCL clock low period	1300			ns
$t_{(HIGH)}$	SCL clock high period	600			ns
t_F	Data fall time			300	ns
t_F	Clock fall time			300	ns
t_R	Clock rise time			300	ns
I^2C BUS (HIGH-SPEED MODE)					
$F_{(SCL)}$	I^2C clock frequency	10		2940	kHz
$t_{(BUF)}$	Bus free time between STOP and START conditions	160			ns
$t_{(HDSTA)}$	Hold time after a repeated START condition. After this period, the first clock is generated.	100			ns
$t_{(SUSTA)}$	Repeated START condition setup time	100			ns
$t_{(SUSTO)}$	STOP condition setup time	100			ns
$t_{(HDDAT)}$	Data hold time	10		125	ns
$t_{(SUDAT)}$	Data setup time	20			ns
$t_{(LOW)}$	SCL clock low period	200			ns
$t_{(HIGH)}$	SCL clock high period	60			ns
t_F	Data fall time			80	ns
t_F	Clock fall time			40	ns
t_R	Clock rise time			40	ns

5.7 Timing Diagram

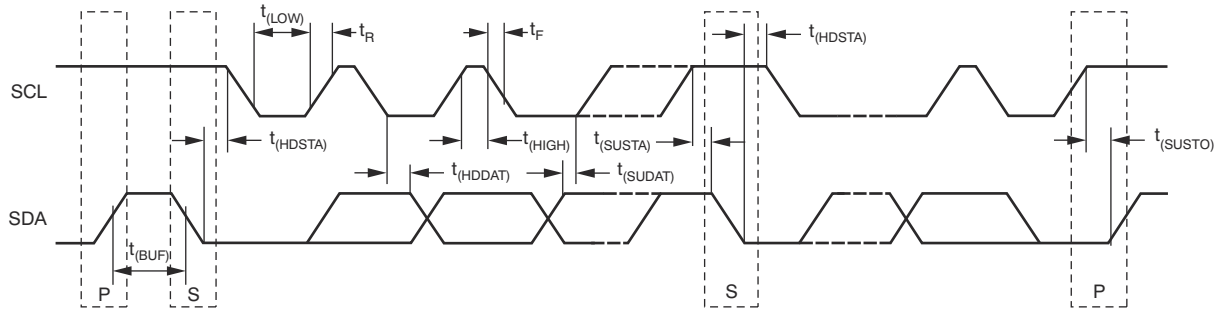

Figure 5-1. I^2C Timing Diagram

5.8 Typical Characteristics

at T_A = 25°C, V_{VS} = 3.3V, V_{CM} = 12V, I_{SENSE} = 0A, and V_{VBUS} = 12V (unless otherwise noted)

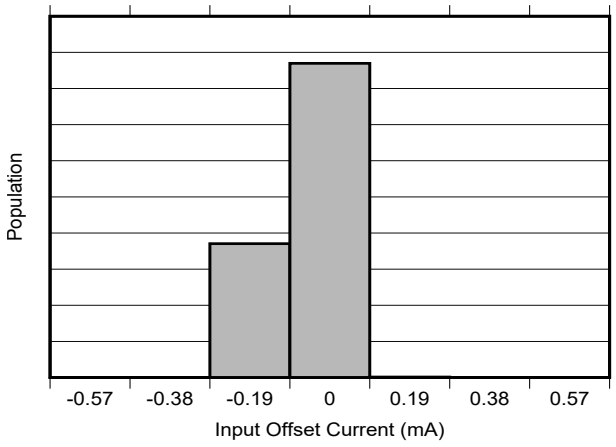

Figure 5-2. Input Offset Current Production Distribution

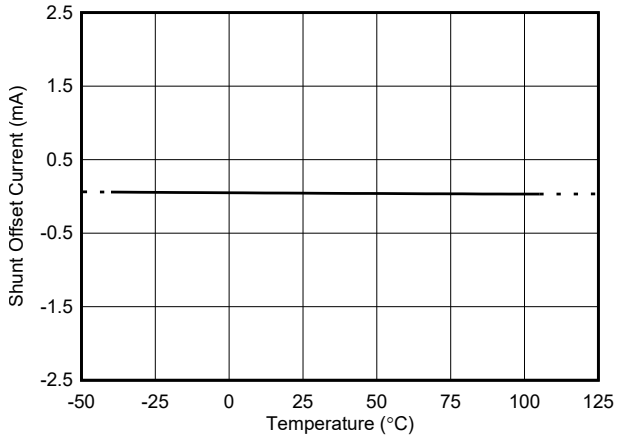

Figure 5-3. Input Offset Current vs Temperature

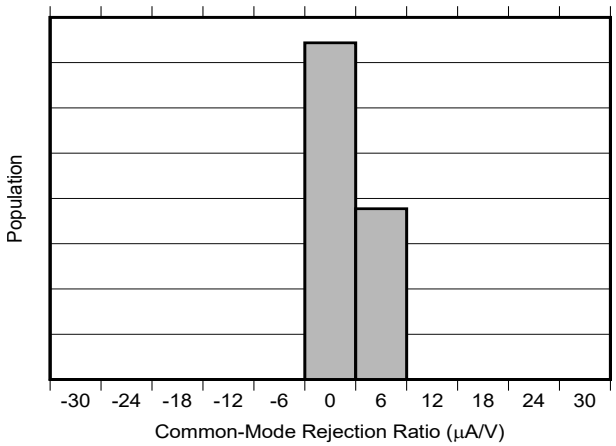

Figure 5-4. Common-Mode Rejection Ratio Production Distribution

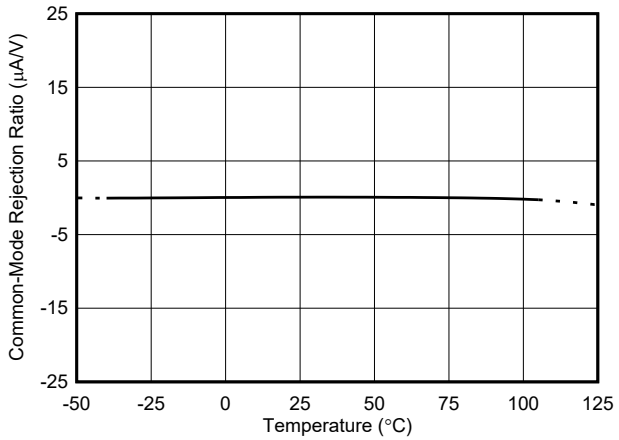

Figure 5-5. Common-Mode Rejection Ratio vs Temperature

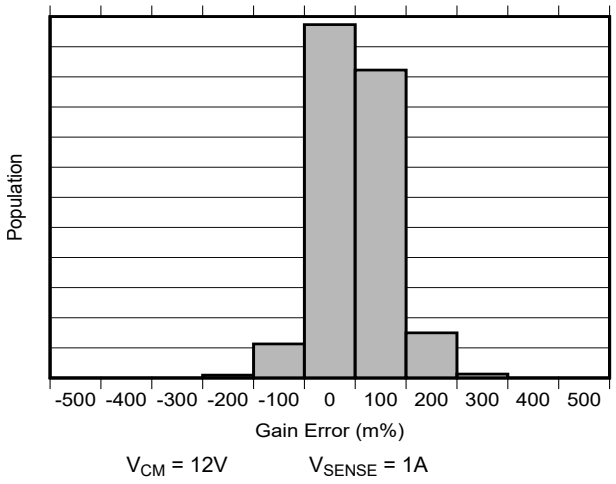

Figure 5-6. Current Measurement Gain Error Production Distribution

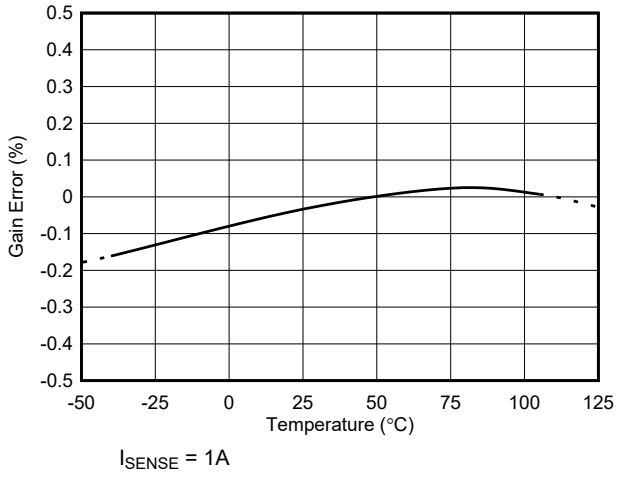

Figure 5-7. Current Measurement Gain Error vs Temperature

Copyright © 2025 Texas Instruments Incorporated

5.8 Typical Characteristics (continued)

at T_A = 25°C, V_{VS} = 3.3V, V_{CM} = 12V, I_{SENSE} = 0A, and V_{VBUS} = 12V (unless otherwise noted)

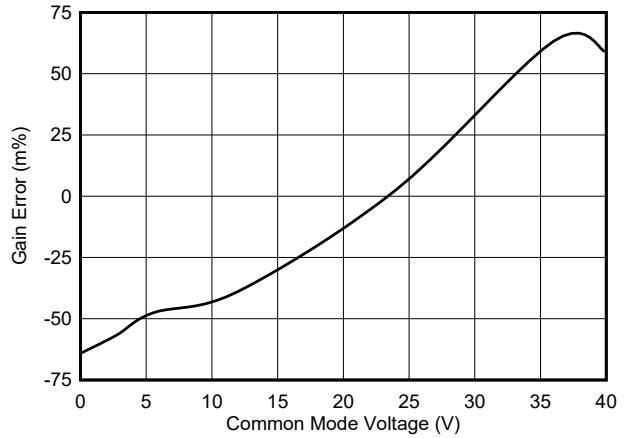

Figure 5-8. Current Measurement Gain Error vs Common-Mode Voltage

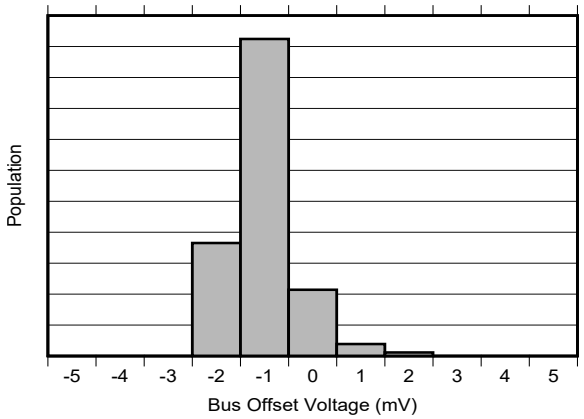

Figure 5-9. Bus Voltage Offset Production Distribution

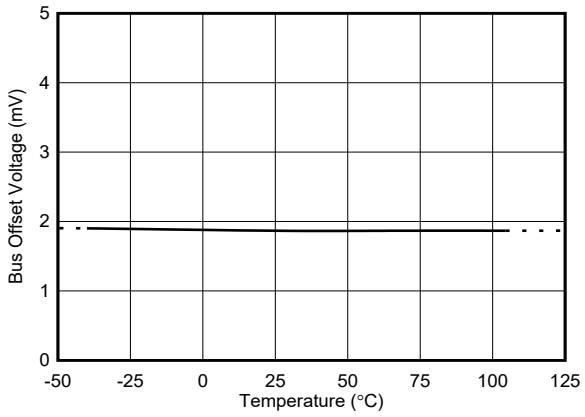

Figure 5-10. Bus Voltage Offset vs Temperature

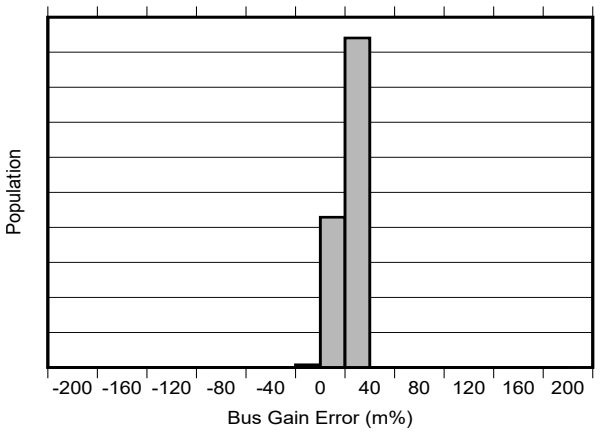

Figure 5-11. Bus Voltage Gain Error Production Distribution

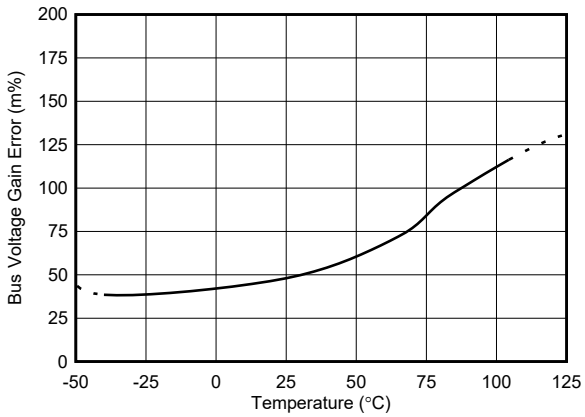

Figure 5-12. Bus Voltage Gain Error vs Temperature

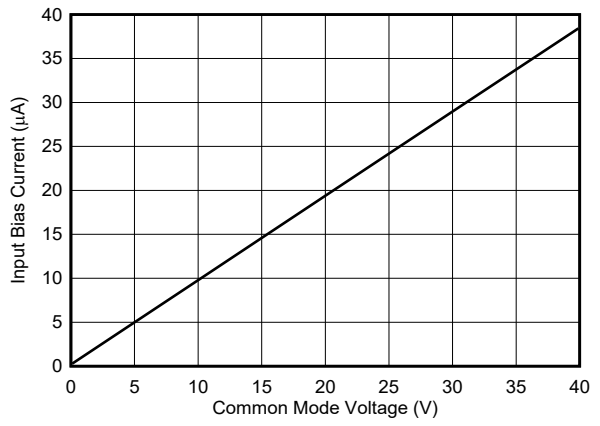

Figure 5-13. Input Bias Current (IB^+ + IB^-) vs Common-Mode Voltage

Copyright © 2025 Texas Instruments Incorporated

5.8 Typical Characteristics (continued)

at T_A = 25°C, V_{VS} = 3.3V, V_{CM} = 12V, I_{SENSE} = 0A, and V_{VBUS} = 12V (unless otherwise noted)

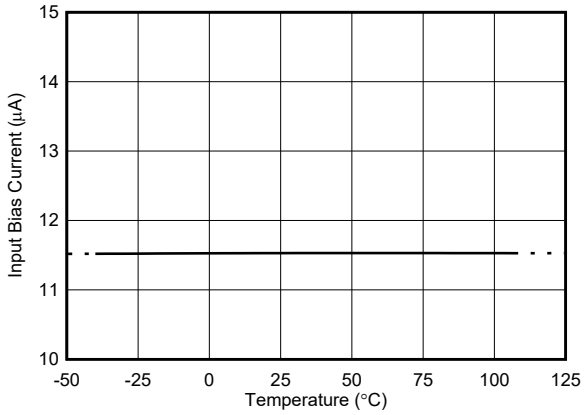

Figure 5-14. Input Bias Current (IB^+ + IB^-) vs Temperature

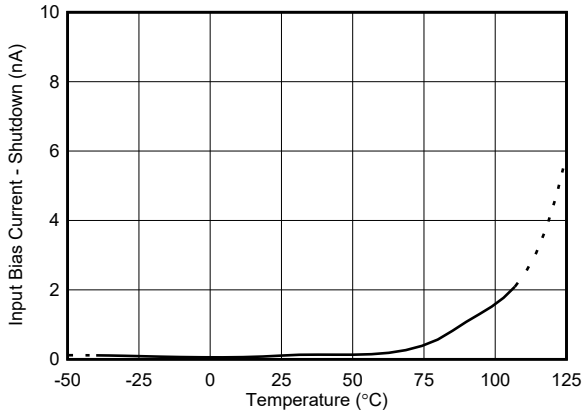

Figure 5-15. Input Bias Current (IB^+ + IB^-) vs Temperature, Shutdown

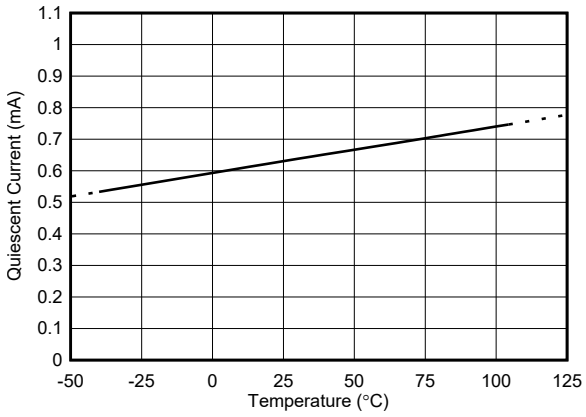

Figure 5-16. Quiescent Current vs Temperature, Active

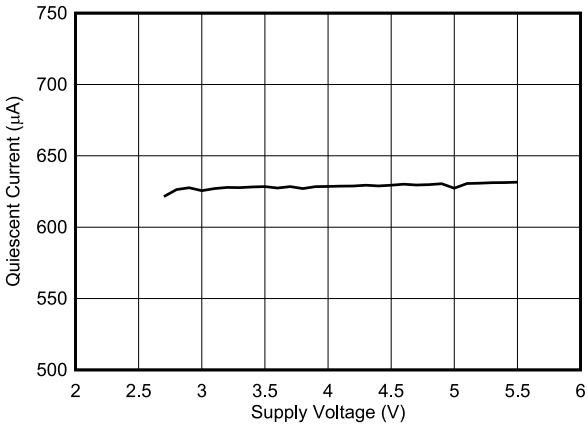

Figure 5-17. Quiescent Current vs Supply Voltage, Active

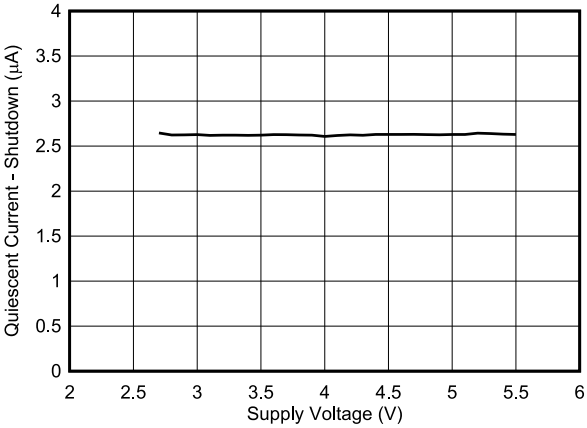

Figure 5-18. Shutdown I_Q vs Supply Voltage

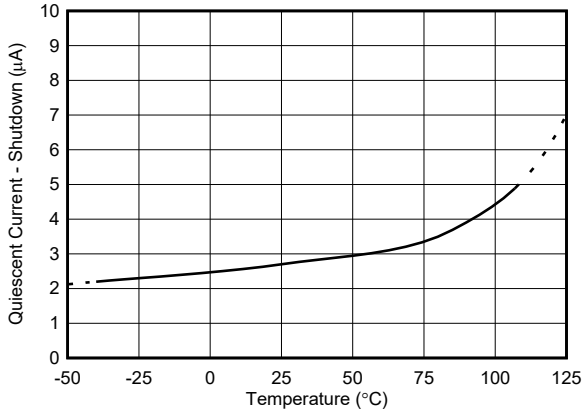

Figure 5-19. Quiescent Current vs Temperature, Shutdown

Copyright © 2025 Texas Instruments Incorporated

5.8 Typical Characteristics (continued)

at T_A = 25°C, V_{VS} = 3.3V, V_{CM} = 12V, I_{SENSE} = 0A, and V_{VBUS} = 12V (unless otherwise noted)

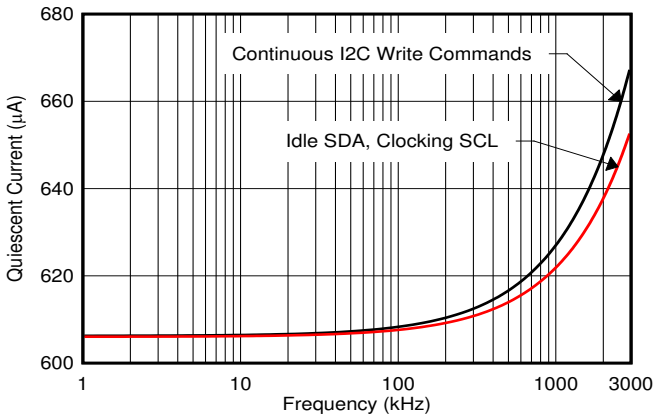

Figure 5-20. Quiescent Current vs Clock Frequency, Active

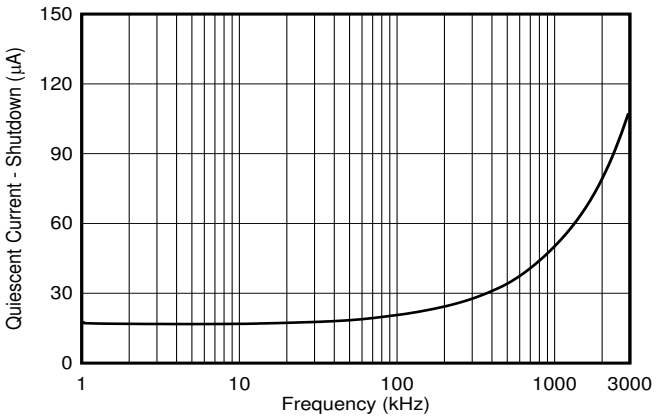

Figure 5-21. Quiescent Current vs Clock Frequency, Shutdown

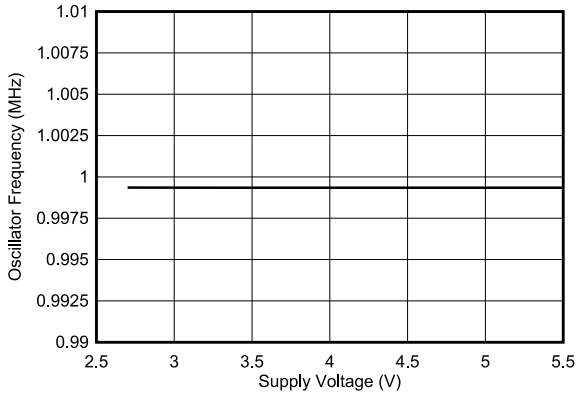

Figure 5-22. Internal Clock Frequency vs Power Supply

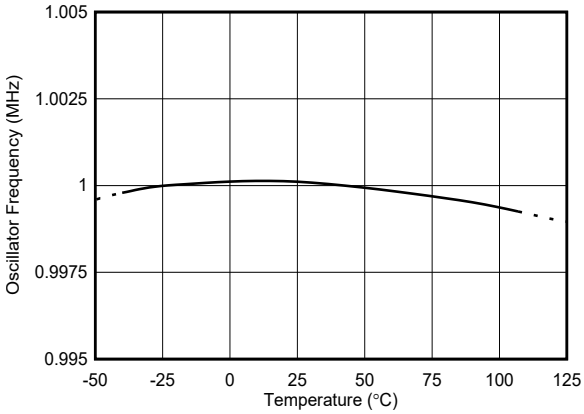

Figure 5-23. Internal Clock Frequency vs Temperature

Copyright © 2025 Texas Instruments Incorporated

6 Detailed Description

6.1 Overview

The INA701 device is a digital current sense amplifier with an I^{2}C digital interface. The device measures shunt voltage, bus voltage, and internal temperature while calculating current, power, energy and charge necessary for accurate decision making in precisely controlled systems. Programmable registers allow flexible configuration for measurement precision as well as continuous or triggered operation. See the *Register Maps* for detailed register information.

6.2 Functional Block Diagram

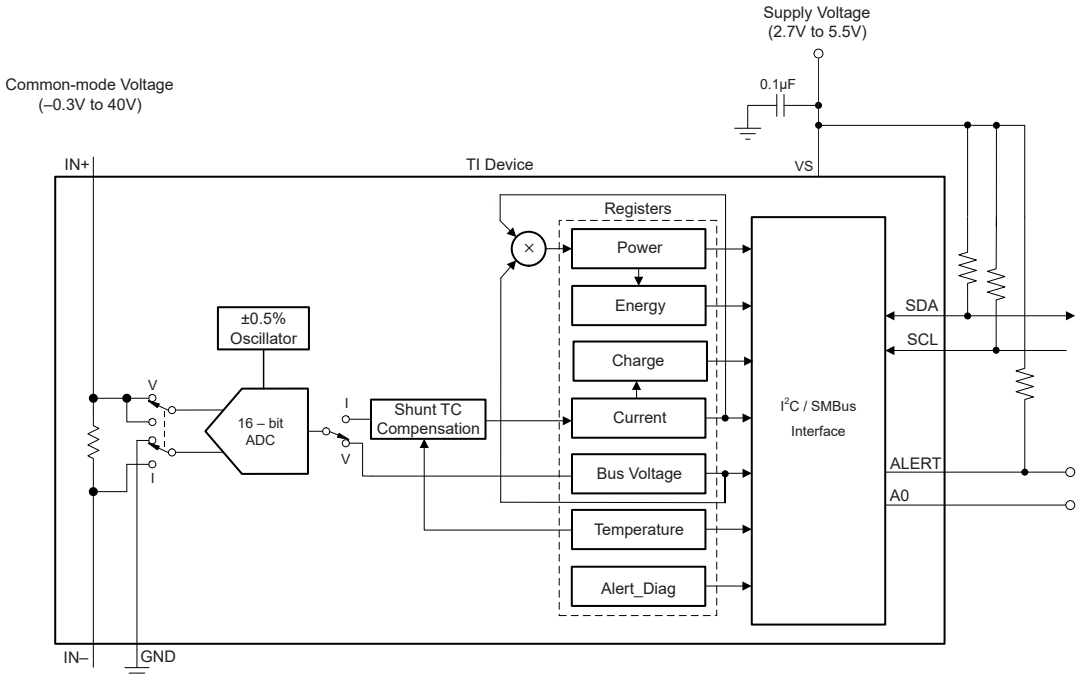

6.3 Feature Description

6.3.1 Integrated Shunt Resistor

The INA701 is a precise, low-drift, digital power monitor that provides accurate measurements over the entire specified ambient temperature range of –40°C to +105°C. The integrated current-sensing resistor is internally compensated to provide measurement stability over temperature, while simplifying printed circuit board (PCB) layout and size constraints. Figure 6-2 shows the device gain error as a function of current.

The IN+ and IN– pins allow access to the on-chip current-sensing resistor. This resistor features internal sense connections that are factory-calibrated and temperature-compensated to achieve a high level of accuracy. The INA701 is system-calibrated so that the current-sensing resistor and current-sensing amplifier are both precisely matched to one another.

The nominal pin-to-pin resistance from IN+ to IN– is approximately 7mΩ, while the internal resistance seen by the digital power monitor is nominally 5mΩ. The power dissipation requirements of the system and package are based on the total package resistance between the IN+ and IN– pins. The material composition of the internal shunt has a resistance that increases with temperature as shown in Figure 6-1.

Copyright © 2025 Texas Instruments Incorporated

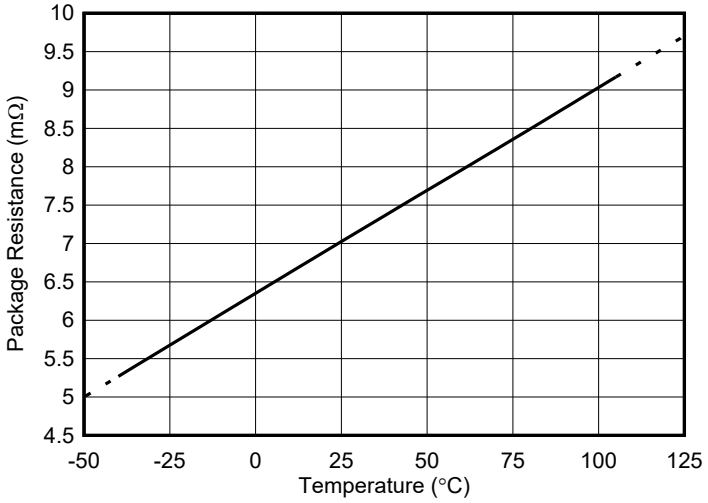

Figure 6-1. IN+ to IN– Package Resistance vs Temperature

The internal compensation of the INA701 corrects for pin-to-pin resistance increases with temperature, achieving less than 50ppm/°C drift over the ambient temperature range.

The INA701 is most accurate when measuring currents in the range of 0.1A to 3A. As currents increase the error in the current measurement also increases. Figure 6-2 below shows how the gain error of the INA701 stays under 0.4% for the shunt current range of 0.1A to 2.5A.

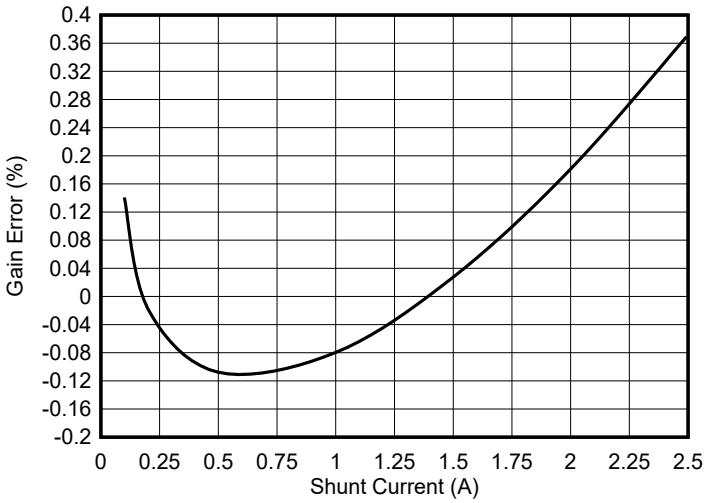

Figure 6-2. Gain Error vs Shunt Current

The change in gain error is consistent enough from device to device that returned values can be scaled up or down depending on the shunt current to give a more accurate result. For example, to achieve higher accuracy when measuring currents around 5A, the returned value can be scaled down by approximately 2% as shown in Figure 6-3.

Copyright © 2025 Texas Instruments Incorporated

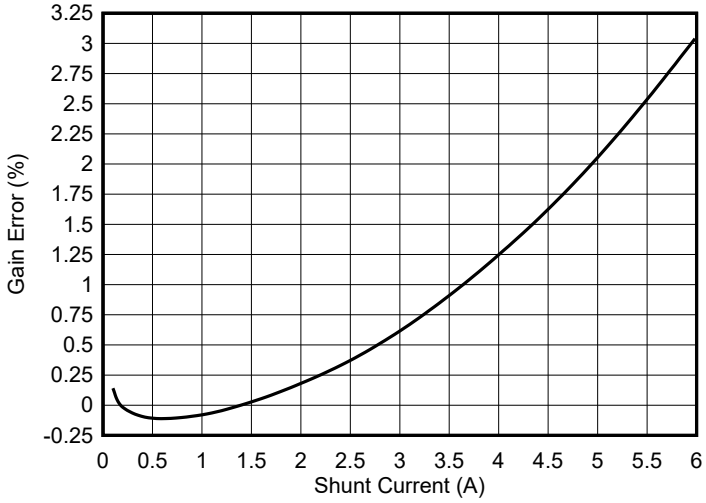

Figure 6-3. Gain Error vs Shunt Current (Full Range)

6.3.2 Safe Operating Area

The power dissipated in the device limits the maximum current that can be safely handled by the device. The current consumed to power the device is low, therefore the primary source of heating is due to the current flow through the internal shunt resistor. The maximum safe-operating current level shown in Figure 6-4 is set so that the heat generated in the package is limited and the internal junction temperature of the silicon does not exceed 125°C. This data is collected from an evaluation module that uses a 2-layer board with 1oz copper power planes to the INA701 IN+ and IN– pins.

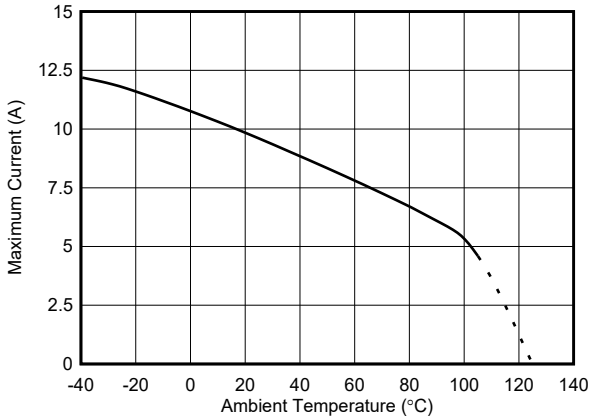

Figure 6-4. Maximum Shunt Current vs Temperature

CAUTION

The INA701 has a maximum junction of 125°C which must not be exceeded. Operation above 125°C can result in permanent damage to the device.

The current measurement capability is limited by ADC full scale range of 6.225A, even though the shunt can withstand pulse currents greater than 6A.

In applications with overcurrent transients, the peak amplitude and duration of the overcurrent event is important to determine the device heating. Figure 6-5 shows the peak pulse current versus pulse duration that the device can withstand before the maximum junction temperature of 125°C is exceeded. The data shown in this curve is collected at T_A = 25°C, using the INA701 evaluation module.

Copyright © 2025 Texas Instruments Incorporated

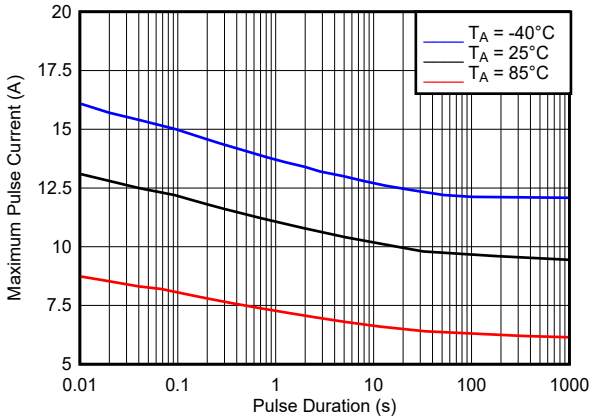

Figure 6-5. Maximum Pulse Current vs Pulse Duration (Single Event)

6.3.3 Versatile Measurement Capability

While the INA701 operates from a 2.7V to 5.5V supply, the device can measure voltage and current on rails as high as 40V. The current is measured by sensing the voltage drop across an internal shunt resistor positioned between the IN+ and IN– pins. The input stage of the INA701 is designed such that the input common-mode voltage can be higher than the device supply voltage, V_S. The supported common-mode voltage range of –0.3V to +40V at the input pins is designed for both high-side and low-side current measurements. There are no special considerations for power-supply sequencing because the common-mode input range and device supply voltage are independent of each other; therefore, the bus voltage can be present with the supply voltage off, and vice-versa without damaging the device.

The device also measures the bus supply voltage through the IN– pin and temperature through the integrated temperature sensor. The differential shunt voltage is measured between the IN+ and IN– pins, while the bus voltage is measured with respect to device ground. Monitored bus voltages can range from 0V to 40V, while monitored temperatures can range from –40°C to +125°C.

Shunt voltage, bus voltage, and temperature measurements are multiplexed internally to a single ADC as shown in Figure 6-6.

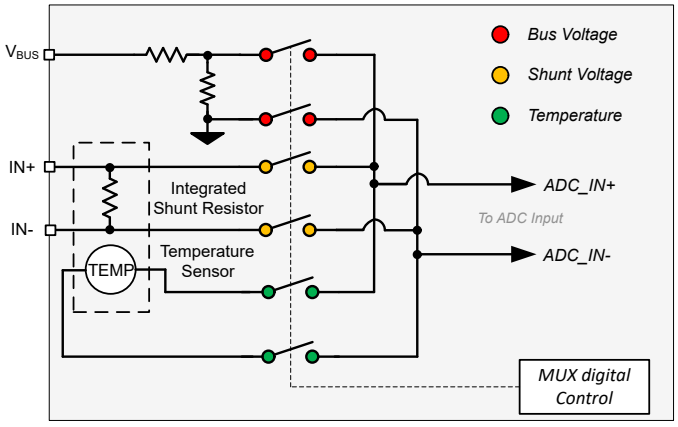

Figure 6-6. High-Voltage Input Multiplexer

6.3.4 Internal Measurement and Calculation Engine

The current and charge are calculated after temperature and shunt voltage measurements, while the power and energy are calculated after a bus voltage measurement. Power and energy are calculated based on the previous current calculation and the latest bus voltage measurement.

Copyright © 2025 Texas Instruments Incorporated

The current, voltage, and temperature values are immediate results when the number of averages is set to one (see Figure 6-7). However, when averaging is used, each ADC measurement is an intermediate result that is stored in the corresponding averaging registers. Following every ADC sample, the newly-calculated values for current, voltage, and temperature are appended to the corresponding averaging registers until the set number of averages is achieved. After all of the samples have been measured, the average current and voltage is determined, then the power is calculated and the results are loaded to the corresponding output registers where the results can then be read.

The energy and charge values are accumulated for each conversion cycle. Therefore the INA701 averaging function is not applied to these.

Calculations for power, charge and energy are performed in the background and do not add to the overall conversion time.

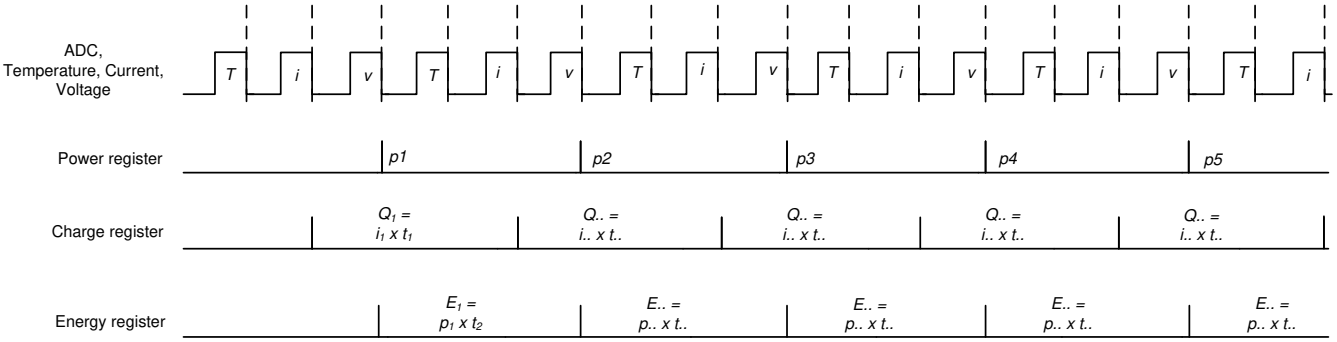

Figure 6-7. Power, Energy, and Charge Calculation Scheme

6.3.5 High-Precision Delta-Sigma ADC

The integrated ADC is a high-performance, low-offset, low-drift, delta-sigma ADC designed to support bidirectional current flow. The measured inputs are selected through the high-voltage input multiplexer to the ADC inputs as shown in Figure 6-6. The ADC architecture enables lower drift measurement across temperature and consistent offset measurements across the common-mode voltage, temperature, and power supply variations. A low-offset ADC is preferred in current sensing applications to provide a near 0V offset voltage that maximizes the useful dynamic range of the system.

The INA701 measures the die temperature, current, and bus voltage. An internal temperature measurement is made before each current measurement. Temperature compensation is then applied to the current measurement to achieve low drift performance. The MODE bits in the ADC_CONFIG register permit selecting modes to convert only the current or bus voltage to allow the user to configure the monitoring function to fit the specific application requirements. After an ADC conversion is complete, the converted values independently update in the corresponding registers where the values can be read through the digital interface at the time of conversion end if no averaging is selected. The conversion time for shunt voltage, bus voltage, and temperature inputs are set independently from 50µs to 4.12ms depending on the values programmed in the ADC_CONFIG register. The value for current is calculated after both the temperature and shunt voltage measurements are made. The total time to get the current measurement is the sum of the conversion times for these two parameters. Enabled measurement inputs are converted sequentially, which means the total time to convert all inputs depends on the conversion time for each input and the number of inputs enabled. When averaging is used, the intermediate values are subsequently stored in an averaging accumulator, and the conversion sequence repeats until the number of averages is reached. After all of the averaging is complete, the final values are updated in the corresponding registers that can then be read. These values remain in the data output registers until the values are replaced by the next fully completed conversion results. In this case, reading the data output registers does not affect a conversion in progress.

The ADC has two conversion modes—continuous and triggered—set by the MODE bits in the ADC_CONFIG register. In continuous-conversion mode, the ADC continuously converts the input measurements and update the output registers as described above in an indefinite loop. In triggered-conversion mode, the ADC converts

Copyright © 2025 Texas Instruments Incorporated

the input measurements as described above, after which the ADC goes into shutdown mode until the user writes to the MODE bits to generate another single-shot trigger. Writing the MODE bits interrupts and restarts triggered or continuous conversions that are in progress. Although the device can be read at any time, and the data from the last conversion remains available, the Conversion Ready flag (CNVRF bit in ALERT_DIAG register) is provided to help coordinate triggered conversions. This bit is set after all conversions and averaging are complete.

The Conversion Ready flag (CNVRF) clears under these conditions:

- Writing to the ADC_CONFIG register (except for selecting shutdown mode); or
- Reading the ALERT_DIAG Register

While the INA701 device is used in either one of the conversion modes, a dedicated digital engine is calculating the current, power, charge and energy values in the background (see *Internal Measurement and Calculation Engine*). In triggered mode, the accumulation registers (ENERGY and CHARGE) are invalid, as the device does not keep track of elapsed time. For applications that require critical measurements in regards to accumulation of time for energy and charge measurements, the device must be configured to use continuous conversion mode, as the accumulated results are continuously updated and can provide true system representation of charge and energy consumption in a system. All of the calculations are performed in the background and do not contribute to conversion time.

For applications that must synchronize with other components in the system, the INA701 conversion can be delayed by programming the CONVDLY bits in CONFIG register in the range between 0ms (no delay) and 510ms. The resolution in programming the conversion delay is 2ms. The conversion delay is set to 0 by default. Conversion delay can assist in measurement synchronization when multiple external devices are used for voltage or current monitoring purposes. In applications where time aligned voltage and current measurements are needed, two devices can be used with the current measurement delayed such that the external voltage and current measurements occurs at approximately the same time. Keep in mind that even though the internal time base for the ADC is precise, synchronization is lost over time due to internal and external time base mismatch.

6.3.5.1 Low Latency Digital Filter

The device integrates a low-pass digital filter that performs both decimation and filtering on the ADC output data, which helps with noise reduction. The digital filter is automatically adjusted for the different output data rates and always settles within one conversion cycle. The user has the flexibility to choose different output conversion time periods T_{CT} from 50µs to 4.12ms. With this configuration the first amplitude notch appears at the Nyquist frequency of the output signal that is determined by the selected conversion time period (see Equation 1).

$$f_{NOTCH} = \frac{1}{2 \times T_{CT}} \quad (1)$$

This means that the filter cut-off frequency scales proportionally with the data output rate as described. Figure 6-8 shows the filter response when the 1.052ms conversion time period is selected.

Copyright © 2025 Texas Instruments Incorporated

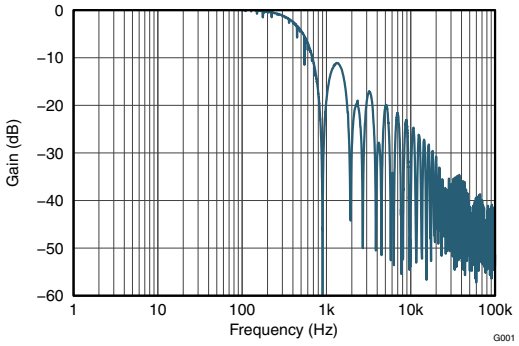

Conversion time = 1.052ms, single conversion only

Figure 6-8. ADC Frequency Response

6.3.5.2 Flexible Conversion Times and Averaging

ADC conversion times for shunt voltage, bus voltage, and temperature can be set independently from 50µs to 4.12ms. The flexibility in conversion time allows for robust operation in a variety of noisy environments. The device also allows for programmable averaging times from a single conversion all the way to an average of 1024 conversions. The amount of averaging selected applies uniformly to all active measurement inputs. The ADC_CONFIG register shown in Table 6-6 shows additional details on the supported conversion times and averaging modes. The INA701 effective resolution of the ADC can be increased by increasing the conversion time and increasing the number of averages. Figure 6-9 and Figure 6-10 both show the effect of conversion time and averaging on a constant input signal.

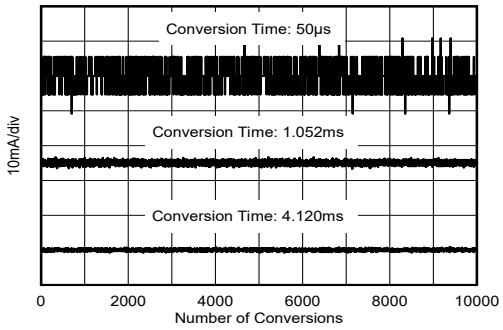

Figure 6-9. Noise vs Conversion Time (Averaging = 1)

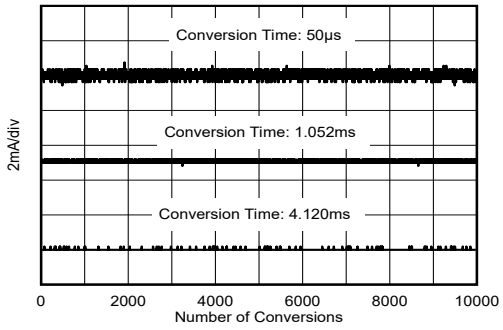

Figure 6-10. Noise vs Conversion Time (Averaging = 128)

Copyright © 2025 Texas Instruments Incorporated

Settings for the conversion time and number of conversions averaged impact the effective measurement resolution. See *ADC Output Data Rate and Noise Performance* for more detailed information on how averaging reduces noise and increases the effective number of bits (ENOB).

6.3.6 Integrated Precision Oscillator

The internal timebase of the device is provided by an internal oscillator that is trimmed to less than 0.5% tolerance at room temperature. The precision oscillator is the timing source for ADC conversions, as well as the time-count used for calculation of energy and charge. The digital filter response varies with conversion time; therefore, the precise clock provides filter response and notch frequency consistency across temperature. On power up, the internal oscillator and ADC take roughly 300µs to reach <1% error stability. After the clock stabilizes, the ADC data output is accurate to the electrical specifications provided in *Specifications*.

6.3.7 Multi-Alert Monitoring and Fault Detection

The INA701 includes a multipurpose, open-drain, ALERT output pin that can be used to report multiple diagnostics or as an indicator that the ADC conversion is complete when the device is operating in both triggered and continuous conversion mode. The diagnostics listed in Table 6-1 are constantly monitored and can be reported through the ALERT pin whenever the monitored output value crosses the associated out-of-range threshold.

Table 6-1. ALERT Diagnostics Description

INA701 DIAGNOSTIC	STATUS BIT IN ALERT_DIAG REGISTER (READ ONLY)	OUT-OF-RANGE THRESHOLD REGISTER (R/W)	REGISTER DEFAULT VALUE
Current Under-Limit	CURRENTUL	CUL	0x8000 h (2's complement))
Current Over-Limit	CURRENTOL	COL	0x7FFF h (2's complement))
Bus Voltage Over-Limit	BUSOL	BOVL	0x7FFF h (2's complement), positive values only)
Bus Voltage Under-Limit	BUSUL	BUVL	0x0000 h (2's complement), positive values only)
Temperature Over-Limit	TMPOL	TEMP_LIMIT	0xFFFF h (2's complement), positive values only)
Power Over-Limit	POL	PWR_LIMIT	0x7FFF h (2's complement))

A read of the ALERT_DIAG register is used to determine which diagnostic triggered the ALERT pin. This register, shown in Table 6-13, is also used to monitor other associated diagnostics as well as configure some ALERT pin functions.

- Alert latch enable — In case the ALERT pin is triggered, this function holds the value of the pin even after all diagnostic conditions have cleared. A read of the ALERT_DIAG register resets the status of the ALERT pin. This function is enabled by setting the ALATCH bit.
- Conversion ready enable — Enables the ALERT pin to assert when an ADC conversion is complete and output values are ready to be read through the digital interface. This function is enabled by setting the CNVR bit. The conversion completed events can also be read through the CNVRF bit regardless of the CNVR bit setting.
- Alert comparison on averaged output — Allows the out-of-range threshold value to be compared to the averaged data values produced by the ADC. This helps remove noise from the output data when compared to the out-of-range threshold to avoid false alerts due to noise. However, the diagnostic is delayed due to the time needed for averaging. This function is enabled by setting the SLOWALERT bit.

Copyright © 2025 Texas Instruments Incorporated

- Alert polarity — Allows the device to invert the active state of the ALERT pin. Note that the ALERT pin is an open-drain output that must be pulled up by a resistor. The ALERT pin is active-low by default and can be configured for active high function using the APOL control bit.

Other diagnostic functions that are not reported by the ALERT pin but are available by reading the ALERT_DIAG register:

- Math overflow — Indicated by the MATHOF bit, reports when an arithmetic operation has caused an internal register overflow.
- Memory status — Indicated by the MEMSTAT bit, monitors the health of the device non-volatile trim memory. This bit must always read '1' when the device is operating properly.
- Energy overflow — Indicated by the ENERGYOF bit, reports when the ENERGY register has reached an overflow state due to data accumulation.
- Charge overflow — Indicated by the CHARGEOF bit, reports when the CHARGE register has reached an overflow state due to data accumulation.

When the ALERT pin is configured to report the ADC conversion complete event, the ALERT pin becomes a multipurpose reporting output. Figure 6-11 shows an example where the device reports ADC conversion complete events while the INA701 device is subject to overcurrent, bus undervoltage, overtemperature and over power events.

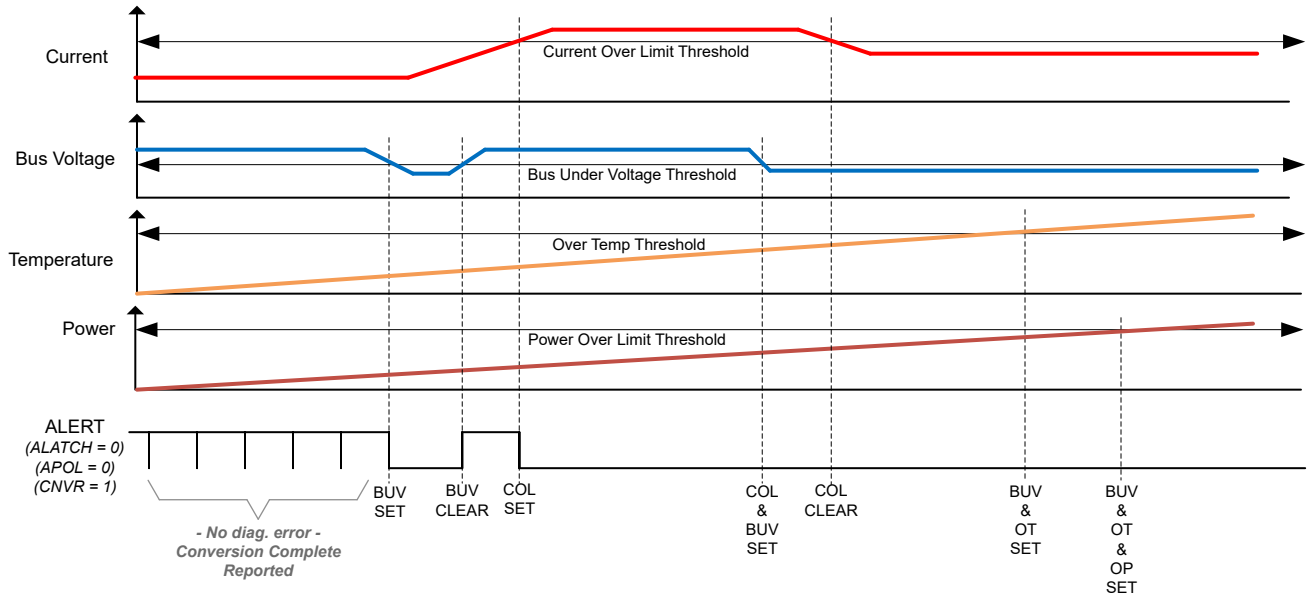

Figure 6-11. Multi-Alert Configuration

6.4 Device Functional Modes

6.4.1 Shutdown Mode

In addition to the two conversion modes (continuous and triggered), the device also has a shutdown mode (selected by the MODE bits in ADC_CONFIG register) that reduces the quiescent current to less than 5µA and turns off current into the device inputs, reducing the impact of supply drain when the device is not being used. The registers of the device can be written to and read from while the device is in shutdown mode. The device remains in shutdown mode until another triggered conversion command or continuous conversion command is received.

The device can be triggered to perform conversions while in shutdown mode. When a conversion is triggered, the ADC starts a conversion. After the conversion is complete, the device returns to the shutdown state.

Note that the shutdown current is specified with an inactive communications bus. Active clock and data activity increases the current consumption as a function of the bus frequency.

Copyright © 2025 Texas Instruments Incorporated

6.4.2 Power-On Reset

Power-on reset (POR) is asserted when V_S drops below 1.26V (typical) at which all of the registers are reset to the default values. A manual device reset can be initiated by setting the RST bit in the CONFIG register. The default power-up register values are shown in the reset column for each register description. See *Register Maps* for the register descriptions.

Copyright © 2025 Texas Instruments Incorporated

6.5 Programming

6.5.1 I²C Serial Interface

The INA701 operates only as a secondary device on both the SMBus and I²C interfaces. Connections to the bus are made through the open-drain SDA and SCL lines. The SDA and SCL pins feature integrated spike suppression filters and Schmitt triggers to minimize the effects of input spikes and bus noise. Although the device integrates spike suppression into the digital I/O lines, proper layout techniques help minimize the amount of coupling into the communication lines. This noise introduction occurs from capacitive coupling signal edges between the two communication lines themselves or from other switching noise sources present in the system. Routing traces in parallel with ground in between layers on a printed circuit board (PCB) typically reduces the effects of coupling between the communication lines. Shielded communication lines reduce the possibility of incorrectly interpreting unintended noise coupling into the digital I/O lines as start or stop commands.

The INA701 supports the transmission protocol for fast mode (1kHz to 400kHz) and high-speed mode (1kHz to 2.94MHz). All data bytes are transmitted most significant byte (MSB) first and follow the SMBus 3.0 transfer protocol.

To communicate with the INA701, the main device must first address secondary devices through a secondary device address byte. The secondary device address byte consists of seven address bits and a direction bit that indicates whether the action is to be a read or write operation.

The device has a single address pin, A0. Table 6-2 lists the pin logic levels for each of the four possible addresses. The device samples the state of the address pin on every bus communication. Establish the pin states before any activity on the interface occurs.

Table 6-2. Address Pins and Secondary Device Addresses

A0	DEVICE ADDRESS
GND	1010100
VS	1010101
SDA	1010110
SCL	1010111

Note

When connecting the A0 pin to SDA to set the device address, an additional hold time of 100ns is needed on the MSB of the I²C address to provide correct device addressing.

6.5.1.1 Writing to and Reading Through the I²C Serial Interface

Accessing a specific register on the INA701 is accomplished by writing the appropriate value to the register pointer. See *Register Maps* for a complete list of registers and corresponding addresses. The value for the register pointer (as shown in Figure 6-14) is the first byte transferred after the secondary device address byte with the R/$\overline{W}$ bit low. Every write operation to the device requires a value for the register pointer.

Writing to a register begins with the first byte transmitted by the main device. This byte is the secondary device address, with the R/$\overline{W}$ bit low. The device then acknowledges receipt of a valid address. The next byte transmitted by the main device is the address of the register to be accessed. This register address value updates the register pointer to the desired internal device register. The next two bytes are written to the register addressed by the register pointer. The device acknowledges receipt of each data byte. The main device can end data transfer by generating a start or stop condition.

When reading from the device, the last value stored in the register pointer by a write operation determines which register is read during a read operation. To change the register pointer for a read operation, a new value must be written to the register pointer. This write is accomplished by issuing a secondary device address byte with the R/$\overline{W}$ bit low, followed by the register pointer byte. No additional data are required. The main device then generates a start condition and sends the address byte for the secondary device with the R/$\overline{W}$ bit high to initiate the read command. The next byte is transmitted by the secondary device and is the most significant byte of the

Copyright © 2025 Texas Instruments Incorporated

register indicated by the register pointer. This byte is followed by an *Acknowledge* from the main device; then the secondary device transmits the least significant byte (LSB). The main device does not always acknowledge receipt of the second data byte. The main device can end the data transfer by generating a *Not-Acknowledge* after receiving any data byte, or generating a start or stop condition. Continually sending the register pointer bytes is not necessary if repeated reads from the same register are desired. The device retains the register pointer value until the value is changed by the next write operation.

Figure 6-12 shows the write operation timing diagram. Figure 6-13 shows the read operation timing diagram. The following diagrams show reading and writing to 16-bit registers.

Register bytes are sent by most significant byte first, followed by the least significant byte.

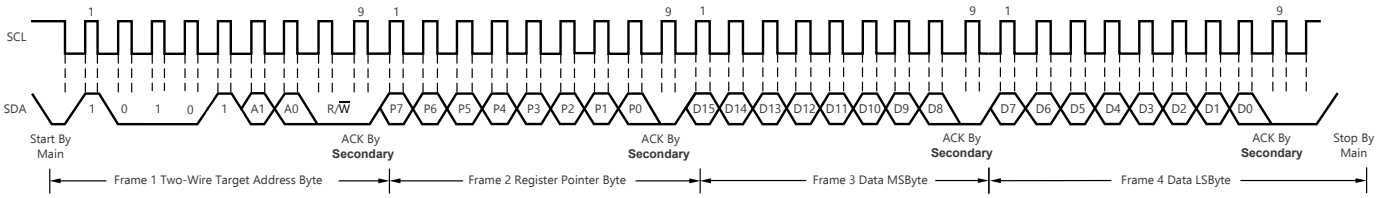

A. The value of the Secondary Device Address byte is determined by the settings of the A0 address pin. See Table 6-2.
B. The device does not support packet error checking (PEC) or perform clock stretching.

Figure 6-12. Timing Diagram for Write Word Format

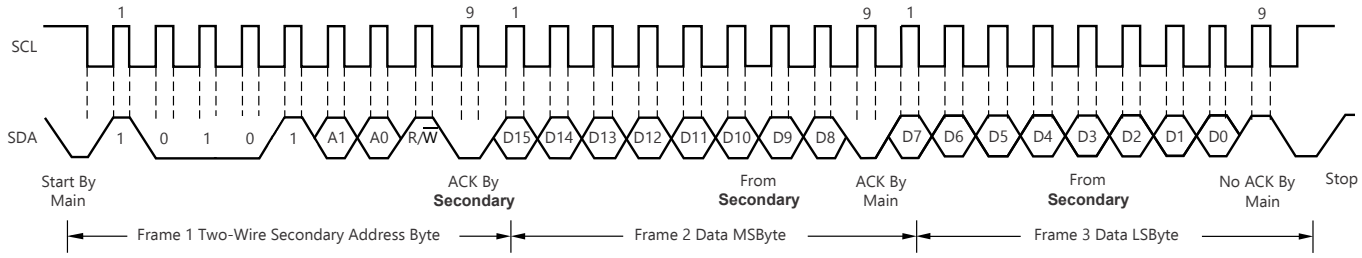

A. The value of the Secondary Device Address byte is determined by the settings of the A0 address pin. See Table 6-2.
B. Read data is from the last register pointer location. If a new register is desired, the register pointer must be updated. See Figure 6-14.
C. ACK by the main device can also be sent.
D. The device does not support packet error checking (PEC) or perform clock stretching.

Figure 6-13. Timing Diagram for Read Word Format

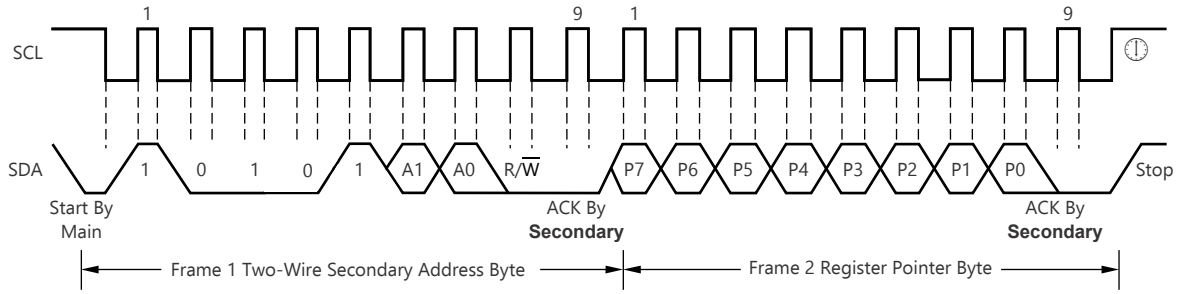

A. The value of the Secondary Device Address Byte is determined by the settings of the A0 address pin. See Table 6-2.

Figure 6-14. Typical Register Pointer Set

6.5.1.2 High-Speed I²C Mode

When the bus is idle, both the SDA and SCL lines are pulled high by the pullup resistors. The main device generates a start condition followed by a valid serial byte containing high-speed (HS) main device code

00001XXX. This transmission is made in fast (400kHz) or standard (100kHz) (F/S) mode at no more than 400kHz. The device does not acknowledge the HS main device code, but does recognize the code and switches internal filters of the device to support 2.94MHz operation.

The main device then generates a repeated start condition (a repeated start condition has the same timing as the start condition). After this repeated start condition, the protocol is the same as F/S mode, except that transmission speeds up to 2.94MHz are allowed. Instead of using a stop condition, use repeated start conditions to maintain the bus in HS-mode. A stop condition ends the HS-mode and switches all the internal filters of the device to support the F/S mode.

6.5.1.3 SMBus Alert Response

The INA701 is designed to respond to the SMBus Alert Response address. The SMBus Alert Response provides a quick fault identification for simple secondary devices. When an Alert occurs, the main device can broadcast the Alert Response secondary device address (0001 100) with the R/$\overline{W}$ bit set high. Following this Alert Response, any secondary device that generates an alert can self-identify by acknowledging the Alert Response and sending the device address to the bus.

The Alert Response can activate several different target devices simultaneously, similar to the I^2C General Call. If more than one target attempts to respond, bus arbitration rules apply. The losing device does not generate an Acknowledge and continues to hold the Alert line low until that device wins arbitration.

6.6 Register Maps

6.6.1 INA701 Registers

Table 6-3 lists the INA701 registers. All register locations not listed in Table 6-3 are considered reserved locations and the register contents must not be modified.

Table 6-3. INA701 Registers

Address	Acronym	Register Name	Register Size (bits)	Section
0h	CONFIG	Configuration	16	Go
1h	ADC_CONFIG	ADC Configuration	16	Go
5h	VBUS	Bus Voltage Measurement	16	Go
6h	DIETEMP	Temperature Measurement	16	Go
7h	CURRENT	Current Result	16	Go
8h	POWER	Power Result	24	Go
9h	ENERGY	Energy Result	40	Go
Ah	CHARGE	Charge Result	40	Go
Bh	ALERT_DIAG	Diagnostic Flags and Alert	16	Go
Ch	COL	Current Over-Limit Threshold	16	Go
Dh	CUL	Current Under-Limit Threshold	16	Go
Eh	BOVL	Bus Overvoltage Threshold	16	Go
Fh	BUVL	Bus Undervoltage Threshold	16	Go
10h	TEMP_LIMIT	Temperature Over-Limit Threshold	16	Go
11h	PWR_LIMIT	Power Over-Limit Threshold	16	Go
3Eh	MANUFACTURER_ID	Manufacturer ID	16	Go

Complex bit access types are encoded to fit into small table cells. Table 6-4 shows the codes that are used for access types in this section.

Table 6-4. INA701 Access Type Codes

Access Type	Code	Description
Read Type		

Copyright © 2025 Texas Instruments Incorporated

Table 6-4. INA701 Access Type Codes (continued)

Access Type	Code	Description
R	R	Value can be read only
Write Type		
W	W	Value can be written only
Read or Write Type		
R/W	R/W	Value can be read or written

6.6.1.1 Configuration (CONFIG) Register (Address = 0h) [reset = 0h]

The CONFIG register is shown in Table 6-5.

Return to the Summary Table.

Table 6-5. CONFIG Register Field Descriptions

Bit	Field	Type	Reset	Description
15	RST	R/W	0h	Reset Bit. Setting this bit to '1' generates a system reset that is the same as power-on reset. Resets all registers to default values. 0h = Normal Operation 1h = System Reset sets registers to default values This bit self-clears.
14	RSTACC	R/W	0h	Resets the contents of accumulation registers ENERGY and CHARGE to 0 0h = Normal Operation 1h = Clears registers to default values for ENERGY and CHARGE registers
13-6	CONVDLY	R/W	0h	Sets the Delay for initial ADC conversion in steps of 2ms. 0h = 0s 1h = 2ms FFh = 510ms
5	RESERVED	R	0h	Reserved. Always reads 0.
4	RESERVED	R	1h	Reserved. Always reads 1.
3-0	RESERVED	R	0h	Reserved. Always reads 0.

Copyright © 2025 Texas Instruments Incorporated

6.6.1.2 ADC Configuration (ADC_CONFIG) Register (Address = 1h) [reset = FB68h]

The ADC_CONFIG register is shown in Table 6-6.

Return to the Summary Table.

Table 6-6. ADC_CONFIG Register Field Descriptions

Bit	Field	Type	Reset	Description
15-12	MODE	R/W	Fh	The user can set the MODE bits for continuous or triggered mode on bus voltage, current or temperature measurement. 0h = Shutdown 1h = Triggered bus voltage, single shot 2h = Reserved 3h = Reserved 4h = Triggered temperature, single shot 5h = Triggered temperature and bus voltage, single shot 6h = Triggered temperature and current, single shot 7h = Triggered temperature, current and bus voltage, single shot 8h = Shutdown 9h = Continuous bus voltage only Ah = Reserved Bh = Reserved Ch = Continuous temperature only Dh = Continuous bus voltage and temperature Eh = Continuous temperature and current Fh = Continuous temperature, current, and bus voltage
11-9	VBUSCT	R/W	5h	Sets the conversion time of the bus voltage measurement. 0h = 50µs 1h = 84µs 2h = 150µs 3h = 280µs 4h = 540µs 5h = 1052µs 6h = 2074µs 7h = 4120µs
8-6	VSENCT	R/W	5h	Sets the conversion time of the shunt resistor voltage. Works in conjunction with the temperature conversion time. Total conversion time for a current measurement is the sum of VSENCT and TCT selections. 0h = 50µs 1h = 84µs 2h = 150µs 3h = 280µs 4h = 540µs 5h = 1052µs 6h = 2074µs 7h = 4120µs

Copyright © 2025 Texas Instruments Incorporated

Table 6-6. ADC_CONFIG Register Field Descriptions (continued)

Bit	Field	Type	Reset	Description
5-3	TCT	R/W	5h	Sets the conversion time of the temperature measurement. Works in conjunction with the shunt voltage conversion time during current measurement. Total conversion time for a current measurement is the sum of VSENCT and TCT selections. 0h = 50µs 1h = 84µs 2h = 150µs 3h = 280µs 4h = 540µs 5h = 1052µs 6h = 2074µs 7h = 4120µs
2-0	AVG	R/W	0h	Selects ADC sample averaging count. The averaging setting applies to all active inputs. When >0h, the output registers are updated after the averaging is complete. 0h = 1 1h = 4 2h = 16 3h = 64 4h = 128 5h = 256 6h = 512 7h = 1024

6.6.1.3 Bus Voltage Measurement (VBUS) Register (Address = 5h) [reset = 0h]

The VBUS register is shown in Table 6-7.

Return to the Summary Table.

Table 6-7. VBUS Register Field Descriptions

Bit	Field	Type	Reset	Description
15-0	VBUS	R	0h	Bus voltage output. (2 value, however always positive. Conversion factor: 3.125mV/LSB

Copyright © 2025 Texas Instruments Incorporated

6.6.1.4 Temperature Measurement (DIETEMP) Register (Address = 6h) [reset = 0h]

The DIETEMP register is shown in Table 6-8.

Return to the Summary Table.

Table 6-8. DIETEMP Register Field Descriptions

Bit	Field	Type	Reset	Description
15-4	DIETEMP	R	0h	Internal die temperature measurement. 2's-complement value. Conversion factor: 125 m°C/LSB.
3-0	RESERVED	R	0h	Reserved. Always reads 0.

6.6.1.5 Current Result (CURRENT) Register (Address = 7h) [reset = 0h]

The CURRENT register is shown in Table 6-9.

Return to the Summary Table.

Table 6-9. CURRENT Register Field Descriptions

Bit	Field	Type	Reset	Description
15-0	CURRENT	R	0h	Calculated current output in Amperes. 2's-complement value. Conversion factor: 480µA/LSB.

6.6.1.6 Power Result (POWER) Register (Address = 8h) [reset = 0h]

The POWER register is shown in Table 6-10.

Return to the Summary Table.

Table 6-10. POWER Register Field Descriptions

Bit	Field	Type	Reset	Description
23-0	POWER	R	0h	Calculated power output. Output value in Watts. Unsigned representation. Positive value. Conversion factor: 96 µW/LSB.

6.6.1.7 Energy Result (ENERGY) Register (Address = 9h) [reset = 0h]

The ENERGY register is shown in Table 6-11.

Return to the Summary Table.

Table 6-11. ENERGY Register Field Descriptions

Bit	Field	Type	Reset	Description
39-0	ENERGY	R	0h	Calculated energy output. Output value is in Joules.Unsigned representation. Positive value. Conversion factor: 1.536 mJ/LSB.

Copyright © 2025 Texas Instruments Incorporated

6.6.1.8 Charge Result (CHARGE) Register (Address = Ah) [reset = 0h]

The CHARGE register is shown in Table 6-12.

Return to the Summary Table.

Table 6-12. CHARGE Register Field Descriptions

Bit	Field	Type	Reset	Description
39-0	CHARGE	R	0h	Calculated charge output. Output value is in Coulombs.2's-complement value. Conversion factor: 30 µC/LSB.

6.6.1.9 Diagnostic Flags and Alert (ALERT_DIAG) Register (Address = Bh) [reset = 0001h]

The ALERT_DIAG register is shown in Table 6-13.

Return to the Summary Table.

Table 6-13. ALERT_DIAG Register Field Descriptions

Bit	Field	Type	Reset	Description
15	ALATCH	R/W	0h	When the Alert Latch Enable bit is set to Transparent mode, the Alert pin and Flag bit reset to the idle state when the fault has been cleared. When the Alert Latch Enable bit is set to Latch mode, the Alert pin and Alert Flag bit remain active following a fault until the ALERT_DIAG Register has been read. 0h = Transparent 1h = Latched
14	CNVR	R/W	0h	Setting this bit high configures the Alert pin to be asserted when the Conversion Ready Flag (bit 1) is asserted, indicating that a conversion cycle is complete. 0h = Disable conversion ready flag on ALERT pin 1h = Enables conversion ready flag on ALERT pin
13	SLOWALERT	R/W	0h	When enabled, ALERT function is asserted on the completed averaged value. This gives the flexibility to delay the ALERT until after the averaged value. 0h = ALERT comparison on non-averaged (ADC) value 1h = ALERT comparison on averaged value
12	APOL	R/W	0h	Alert Polarity bit sets the Alert pin polarity. 0h = Normal (active-low, open-drain) 1h = Inverted (active-high, open-drain)
11	ENERGYOF	R	0h	This bit indicates the health of the ENERGY register. If the 40-bit ENERGY register has overflowed this bit is set to 1. 0h = Normal 1h = Overflow Clears by setting the RSTACC field in the Configuration register.
10	CHARGEOF	R	0h	This bit indicates the health of the CHARGE register. If the 40-bit CHARGE register has overflowed this bit is set to 1. 0h = Normal 1h = Overflow Clears by setting the RSTACC field in the Configuration register.
9	MATHOF	R	0h	This bit is set to 1 if an arithmetic operation resulted in an overflow error. This bit indicates that current and power data can be invalid. 0h = Normal 1h = Overflow Must be manually cleared by triggering another conversion or by clearing the accumulators with the RSTACC bit.

Copyright © 2025 Texas Instruments Incorporated

Table 6-13. ALERT_DIAG Register Field Descriptions (continued)

Bit	Field	Type	Reset	Description
8	RESERVED	R	0h	Reserved. Always read 0.
7	TMPOL	R	0h	This bit is set to 1 if the temperature measurement exceeds the threshold limit in the temperature over-limit register. 0h = Normal 1h = Overtemperature Event When ALATCH =1 this bit is cleared by reading this register.
6	CURRENTOL	R	0h	This bit is set to 1 if the current measurement exceeds the threshold limit in the current over-limit register. 0h = Normal 1h = Overcurrent Event When ALATCH =1 this bit is cleared by reading this register.
5	CURRENTUL	R	0h	This bit is set to 1 if the current measurement falls below the threshold limit in the shunt under-limit register. 0h = Normal 1h = Undercurrent Event When ALATCH =1 this bit is cleared by reading this register.
4	BUSOL	R	0h	This bit is set to 1 if the bus voltage measurement exceeds the threshold limit in the bus over-limit register. 0h = Normal 1h = Bus Over-Limit Event When ALATCH =1 this bit is cleared by reading this register.
3	BUSUL	R	0h	This bit is set to 1 if the bus voltage measurement falls below the threshold limit in the bus under-limit register. 0h = Normal 1h = Bus Under-Limit Event When ALATCH =1 this bit is cleared by reading this register.
2	POL	R	0h	This bit is set to 1 if the power measurement exceeds the threshold limit in the power limit register. 0h = Normal 1h = Power Over-Limit Event When ALATCH =1 this bit is cleared by reading this register.
1	CNVRF	R	0h	This bit is set to 1 if the conversion is completed. 0h = Normal 1h = Conversion is complete When ALATCH =1 this bit is cleared by reading this register or starting a new triggered conversion.
0	MEMSTAT	R	1h	This bit is set to 0 if a checksum error is detected in the device trim memory space. 0h = Memory Checksum Error 1h = Normal Operation

Copyright © 2025 Texas Instruments Incorporated

6.6.1.10 Current Over-Limit Threshold (COL) Register (Address = Ch) [reset = 7FFFh]

If negative values are entered in this register, then a current measurement of 0A trips this alarm. When using negative values for the under current and overcurrent thresholds be aware that the overcurrent threshold must be set to the larger (that is, less negative) of the two values. The COL register is shown in Table 6-14.

Return to the Summary Table.

Table 6-14. COL Register Field Descriptions

Bit	Field	Type	Reset	Description
15-0	COL	R/W	7FFFh	Sets the threshold for comparison of the value to detect overcurrent condition (overcurrent protection). 2's-complement value.

6.6.1.11 Current Under-Limit Threshold (CUL) Register (Address = Dh) [reset = 8000h]

The CUL register is shown in Table 6-15.

Return to the Summary Table.

Table 6-15. CUL Register Field Descriptions

Bit	Field	Type	Reset	Description
15-0	CUL	R/W	8000h	Sets the threshold for comparison of the value to detect undercurrent condition. 2's-complement value.

6.6.1.12 Bus Overvoltage Threshold (BOVL) Register (Address = Eh) [reset = 7FFFh]

The BOVL register is shown in Table 6-16.

Return to the Summary Table.

Table 6-16. BOVL Register Field Descriptions

Bit	Field	Type	Reset	Description
15	Reserved	R	0h	Reserved. Always reads 0.
14-0	BOVL	R/W	7FFFh	Sets the threshold for comparison of the value to detect Bus Overvoltage (overvoltage protection). Unsigned representation, positive value only. Conversion factor: 3.125mV/LSB.

6.6.1.13 Bus Undervoltage Threshold (BUVL) Register (Address = Fh) [reset = 0h]

The BUVL register is shown in Table 6-16.

Return to the Summary Table.

Table 6-17. BUVL Register Field Descriptions

Bit	Field	Type	Reset	Description
15	Reserved	R	0h	Reserved. Always reads 0.
14-0	BUVL	R/W	0h	Sets the threshold for comparison of the value to detect Bus Undervoltage (undervoltage protection). Unsigned representation, positive value only. Conversion factor: 3.125mV/LSB.

Copyright © 2025 Texas Instruments Incorporated

6.6.1.14 Temperature Over-Limit Threshold (TEMP_LIMIT) Register (Address = 10h) [reset = 7FFFh]

The TEMP_LIMIT register is shown in Table 6-18.

Return to the Summary Table.

Table 6-18. TEMP_LIMIT Register Field Descriptions

Bit	Field	Type	Reset	Description
15-0	TOL	R/W	7FFFh	Sets the threshold for comparison of the value to detect overtemperature measurements. 2's-complement value. The value entered in this field compares directly against the value from the DIETEMP register to determine if an overtemperature condition exists. Conversion factor: 7.8125 m°C/LSB.

6.6.1.15 Power Over-Limit Threshold (PWR_LIMIT) Register (Address = 11h) [reset = FFFFh]

The PWR_LIMIT register is shown in Table 6-19.

Return to the Summary Table.

Table 6-19. PWR_LIMIT Register Field Descriptions

Bit	Field	Type	Reset	Description
15-0	POL	R/W	FFFFh	Sets the threshold for comparison of the value to detect power over-limit measurements. Unsigned representation, positive value only. The value entered in this field compares directly against the value from the POWER register to determine if an over power condition exists. Conversion factor: 24.576mW/LSB.

6.6.1.16 Manufacturer ID (MANUFACTURER_ID) Register (Address = 3Eh) [reset = 5449h]

The MANUFACTURER_ID register is shown in Table 6-20.

Return to the Summary Table.

Table 6-20. MANUFACTURER_ID Register Field Descriptions

Bit	Field	Type	Reset	Description
15-0	MANFID	R	5449h	Reads back TI in ASCII.

Copyright © 2025 Texas Instruments Incorporated

7 Application and Implementation

Note

Information in the following applications sections is not part of the TI component specification, and TI does not warrant its accuracy or completeness. TI's customers are responsible for determining suitability of components for their purposes, as well as validating and testing their design implementation to confirm system functionality.

7.1 Application Information

7.1.1 Device Measurement Range and Resolution

Table 7-1 shows the full scale voltage on shunt, bus, and temperature measurements, along with the associated step size.

Table 7-1. Register Full Scale Values and Resolution

PARAMETER	REGISTER ADDRESS	SIZE	FULL SCALE VALUE	RESOLUTION
Current	7h	16 bit, signed	±6.2259A	190µA/LSB
Bus voltage	5h	16 bit, signed, always positive	0V to 40V	3.125mV/LSB
Die Temperature	6h	12 bit, signed	–40°C to +150°C	125m°C/LSB
Power	8h	24 bit, unsigned	0.63534kW	38µW/LSB
Energy	9h	40 bit, unsigned	668.5MJ	0.608mJ/LSB
Charge	Ah	40 bit, signed	6.52835MC	11.875µC/LSB

The internal die temperature sensor range extends from –256°C to +256°C but is limited by the junction temperature range of –40°C to 125°C. Likewise, the bus voltage measurement range extends up to 102.4V but is limited by silicon to 40V.

Current, bus voltage, temperature, power, energy, and charge measurements can be read through the corresponding address registers. Values are calculated by multiplying the returned value by the corresponding LSB size.

Signed values are represented in two's compliment format.

Upon overflow, the ENERGY register rolls over and starts from zero. This register value can also be reset at any time by setting the RSTACC bit in the CONFIG register.

An overflow event in the CHARGE register is indicated by the CHARGEOF bit. If an overflow condition occurs, the CHARGE register must be manually reset by setting the RSTACC bit in the CONFIG register.

See *Detailed Design Procedure* for a design example using these equations.

7.1.2 ADC Output Data Rate and Noise Performance

The INA701 noise performance and effective resolution depend on the ADC conversion time. The device also supports digital averaging which can further help decrease digital noise. The flexibility of the device to select ADC conversion time and data averaging offers increased signal-to-noise ratio and achieves the highest dynamic range with lowest offset. The profile of the noise at lower signals levels is dominated by the system noise that is comprised mainly of 1/f noise or white noise. The INA701 effective resolution of the ADC can be increased by increasing the conversion time and increasing the number of averages.

Table 7-2 shows the output data rate conversion settings supported by the device. The fastest conversion setting is 50µs. Typical noise-free resolution is represented as Effective Number of Bits (ENOB) based on device measured data. The ENOB is calculated based on noise peak-to-peak values, which takes full noise distribution into consideration. The conversion time for the temperature measurement is set to the power-on default value.

Copyright © 2025 Texas Instruments Incorporated

Table 7-2. INA701 Noise Performance

ADC CONVERSION TIME PERIOD [µs]	OUTPUT SAMPLE AVERAGING [SAMPLES]	OUTPUT SAMPLE PERIOD [ms]	NOISE-FREE ENOB CURRENT MEASUREMENT
50	1	0.05	9.28
84		0.084	9.85
150		0.15	10.32
280		0.28	10.80
540		0.54	11.12
1052		1.052	11.90
2074		2.074	12.25
4120		4.12	12.54
50	4	0.2	10.01
84		0.336	10.46
150		0.6	11.39
280		1.12	11.71
540		2.16	12.39
1052		4.208	12.71
2074		8.296	13.39
4120		16.48	13.71
50	16	0.8	11.07
84		1.344	11.71
150		2.4	12.39
280		4.48	12.90
540		8.64	13.39
1052		16.832	13.71
2074		33.184	14.71
4120		65.92	14.71
50	64	3.2	11.90
84		5.376	12.90
150		9.6	13.39
280		17.92	13.71
540		34.56	14.12
1052		67.328	14.71
2074		132.736	15.71
4120		263.68	15.71
50	128	6.4	12.90
84		10.752	13.12
150		19.2	13.39
280		35.84	14.71
540		69.12	14.71
1052		134.656	15.71
2074		265.472	15.71
4120		527.36	15.71

Copyright © 2025 Texas Instruments Incorporated

Table 7-2. INA701 Noise Performance (continued)

ADC CONVERSION TIME PERIOD [µs]	OUTPUT SAMPLE AVERAGING [SAMPLES]	OUTPUT SAMPLE PERIOD [ms]	NOISE-FREE ENOB CURRENT MEASUREMENT
50	256	12.8	13.39
84		21.504	13.39
150		38.4	14.71
280		71.68	14.71
540		138.24	15.71
1052		269.312	15.71
2074		530.944	15.71
4120		1054.72	16
50	512	25.6	13.39
84		43	14.12
150		76.8	14.71
280		143.36	15.71
540		276.48	15.71
1052		538.624	15.71
2074		1061.888	16
4120		2109.44	16
50	1024	51.2	14.12
84		86.016	14.71
150		153.6	15.71
280		286.72	15.71
540		552.96	15.71
1052		1077.248	16
2074		2123.776	16
4120		4218.88	16

Copyright © 2025 Texas Instruments Incorporated

7.2 Typical Application

The low offset voltage of the INA701 allows accurate monitoring of a wide range of currents. Figure 7-1 shows the circuit for monitoring currents in a high-side configuration.

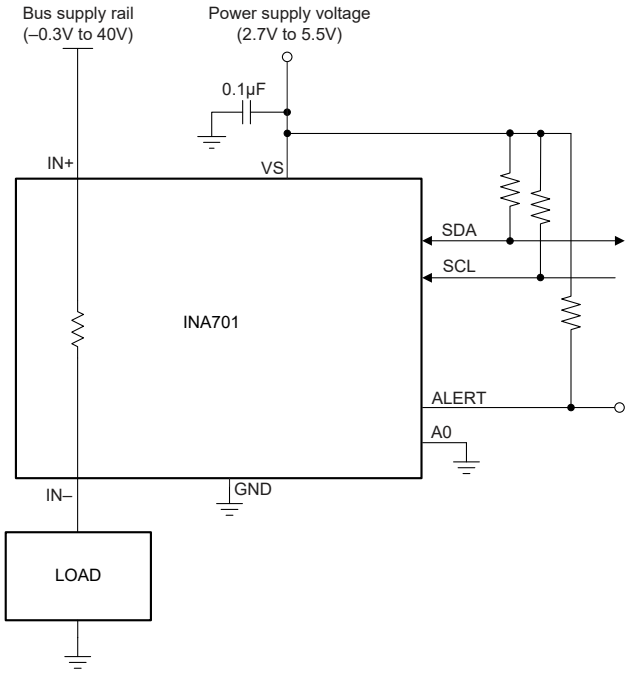

Figure 7-1. INA701 High-Side Sensing Application Diagram

7.2.1 Design Requirements

The design requirements for the circuit shown in Figure 7-1 are listed in Table 7-3.

Table 7-3. Design Parameters

DESIGN PARAMETER	EXAMPLE VALUE
Power-supply voltage (V_S)	5V
Bus supply rail (V_{CM})	12V
Bus supply rail overvoltage fault threshold	14V
Average Current	2A
Overcurrent fault threshold (I_{MAX})	4A
Temperature	40ºC
Charge Accumulation Period	1 hour

7.2.2 Detailed Design Procedure

7.2.2.1 Configure the Device

The first step to program the INA701 is to properly set the device and ADC configuration registers. On initial power up, the CONFIG and ADC_CONFIG registers are set to the reset values as shown in Table 6-5 and Table 6-6. In this default power-on state, the device is set with the ADC continuously converting the temperature, current, and bus voltage. If the default power-up conditions do not meet the design requirements, these registers must be set properly after each V_S power cycle event.

7.2.2.2 Set Desired Fault Thresholds

Fault thresholds are set by programming the desired trip threshold into the corresponding fault register. Table 6-1 shows the list of supported fault registers.

Copyright © 2025 Texas Instruments Incorporated

An overcurrent threshold is set by programming the Current Over-Limit Threshold register (COL). The value that must be programmed into this register is calculated by dividing the overcurrent limit value by the current LSB size. For this example, the target value for the COL register is 2A ÷ 190µA = 10526d (291Eh).

An overvoltage fault threshold on the bus voltage is set by programming the bus overvoltage limit register (BOVL). In this example the desired overvoltage threshold is 14V. The value that must be programmed into this register is calculated by dividing the target threshold voltage by the bus voltage fault limit LSB value of 3.125mV. For this example, the target value for the BOVL register is 14V ÷ 3.125mV = 4480d (1180h).

When setting the power over-limit value, the LSB size used to calculate the value needed in the limit registers is 256 times greater than the power LSB. This is because the power register is a 24 bits in length while the power fault limit register is 16 bits. The LSB value to use for setting the over-power fault limit is 9.728mW.

Values stored in the alert limit registers are set to the default values after V_S power cycle events and must be reprogrammed each time power is applied.

7.2.2.3 Calculate Returned Values

Parametric values are calculated by multiplying the returned value by the LSB value. Table 7-4 shows the returned values for this application example, assuming the design requirements shown in Table 7-3.

Table 7-4. Calculating Returned Values

PARAMETER	RETURNED VALUE	LSB VALUE	CALCULATED VALUE
Current (A)	10526d	190µA	2A
Bus voltage (V)	3840d	3.125mV	12V
Power (W)	631578d	38µW	24W
Energy (J)	142105263d	0.608mJ	86.4kJ
Charge (C)	606315789d	11.875µC	7200C
Temperature (°C)	320d	125m°C	40°C

Current, Bus Voltage (positive only), Charge, and Temperature return values in 2's-complement format. In 2's-complement format a negative value in binary is represented by having a 1 in the most significant bit of the returned value. These values can be converted to decimal by first inverting all the bits and adding 1 to obtain the unsigned binary value. This value can then be converted to decimal with the negative sign applied. For example, assume a current reading returns 1011 0100 0001 0000. This is a negative value due to the MSB having a value of one. Inverting the bits and adding one results in 0100 1011 1111 0000 (19440d) which is current value of 3.6936A. The returned value is negative, therefore the measured current value is –3.6936A.

Copyright © 2025 Texas Instruments Incorporated

7.2.3 Application Curves

Figure 7-2 and Figure 7-3 show the ALERT pin response to an overcurrent fault with a conversion time of 50µs for the temperature, shunt voltage, and bus voltage measurements with averaging set to 1. This configuration results in a total conversion time of 150µs for all three measurements. For these scope shots, persistence was enabled on the ALERT channel to show the variation in the alert response for many sequential fault events. The alert response time can change depending on the value of the current before fault occurs as well as the how much the fault condition exceeds the programmed fault threshold. Figure 7-2 shows the response time for an overcurrent fault when the fault condition greatly exceeds the programmed threshold. While Figure 7-3 shows the overcurrent response time when the fault slightly exceeds the programmed threshold. Variation in the alert response exists because the external fault event is not synchronized to the internal ADC conversion start. Also the ADC is constantly sampling to get a result, so the response time for fault events starting from zero is slower than fault events starting from values near the set fault threshold. In applications where the alert timing is critical for overcurrent events, the worst-case alert response is equal to 2 × $t_{conv_current}$ + t_{conv_temp} + $t_{conv_voltage}$ + 25µs. An additional 25µs is added to allow for background math calculations.

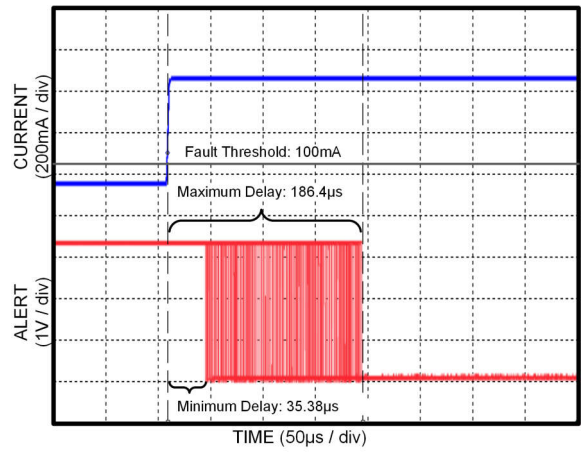

Figure 7-2. Alert Response Time (Sampled Values Significantly Above Threshold)

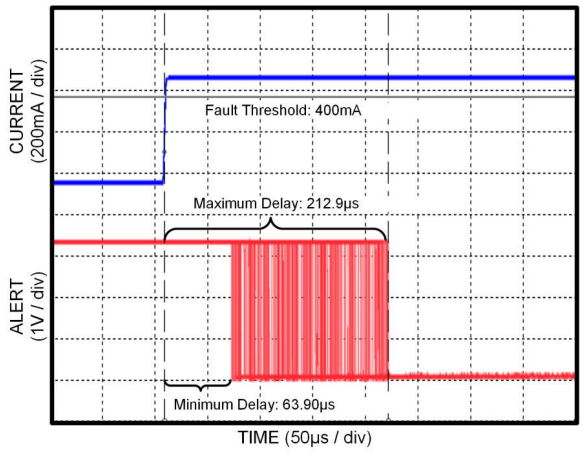

Figure 7-3. Alert Response Time (Sampled Values Slightly Above Threshold)

Copyright © 2025 Texas Instruments Incorporated

8 Power Supply Recommendations

The input circuitry of the device can accurately measure signals on common-mode voltages beyond the power-supply voltage, V_S. For example, the voltage applied to the V_S power supply terminal can be 5V, whereas the load power-supply voltage being monitored (the common-mode voltage) can be as high as 40V. Note that the device can also withstand the full 0V to 40V range at the input terminals, regardless of whether the device has power applied or not. Avoid applications where the GND pin is disconnected while device is actively powered.

Place the required power-supply bypass capacitors as close as possible to the supply and ground terminals of the device. A typical value for this supply bypass capacitor is 0.1µF. Applications with noisy or high-impedance power supplies can require additional decoupling capacitors to reject power-supply noise.

9 Layout

9.1 Layout Guidelines

A layout that maximizes the thermal conduction from the IN– and IN+ pads is essential when sensing high load currents. The area of the thermal planes connecting to these pads can be maximized, filling any available area, while located as close as possible to the device. Thermal vias can be used generously and placed as close as possible to the IN– and IN+ pads to maximize thermal conduction to the bottom and available internal layers. To achieve better thermal performance, both the bottom and available internal layers can be used to conduct the heat away from the device. See the *INA701EVM User's Guide* for more information on via and power plane placement in a multilayer design. Place the power-supply bypass capacitor as close as possible to the supply and ground pins.

9.2 Layout Example

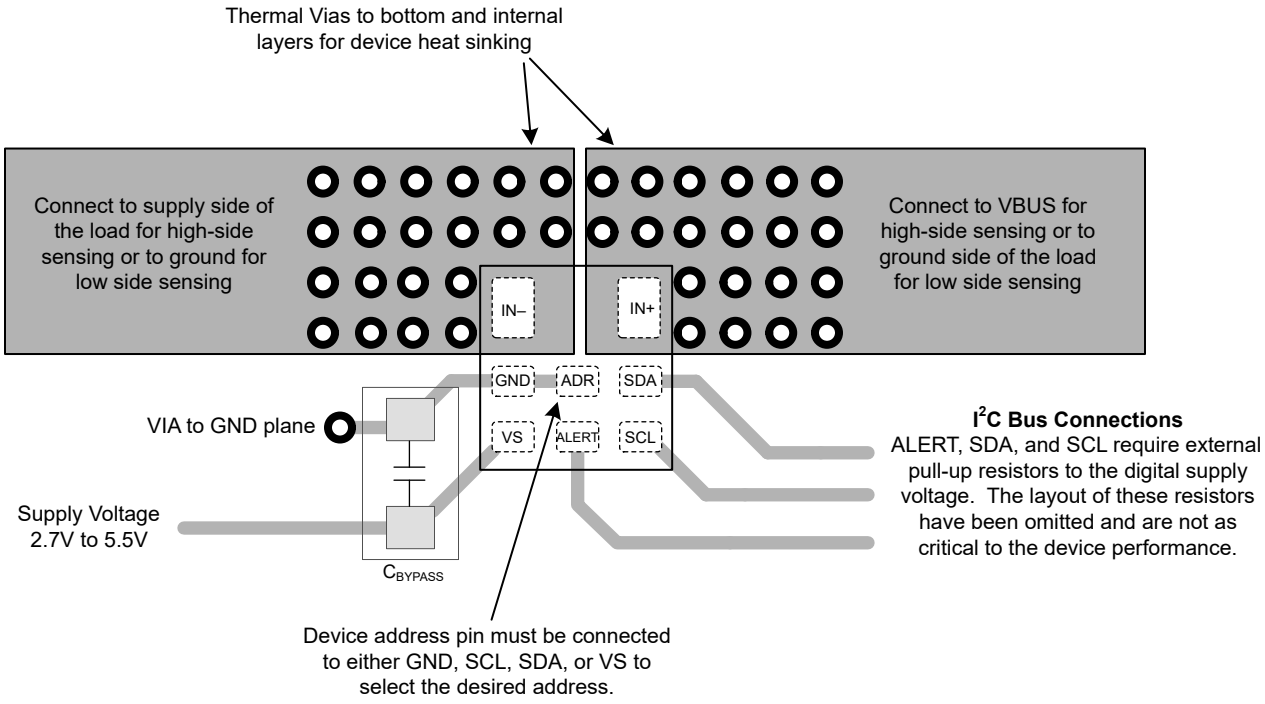

Figure 9-1. INA701 Layout Example

10 Device and Documentation Support

10.1 Documentation Support

10.1.1 Related Documentation

For related documentation, see the following:

- Texas Instruments, *INA701EVM User's Guide*

10.2 Receiving Notification of Documentation Updates

To receive notification of documentation updates, navigate to the device product folder on ti.com. Click on *Notifications* to register and receive a weekly digest of any product information that has changed. For change details, review the revision history included in any revised document.

10.3 Support Resources

TI E2E™ support forums are an engineer's go-to source for fast, verified answers and design help — straight from the experts. Search existing answers or ask your own question to get the quick design help you need.

Linked content is provided "AS IS" by the respective contributors. They do not constitute TI specifications and do not necessarily reflect TI's views; see TI's Terms of Use.

10.4 Trademarks

EZShunt™ and TI E2E™ are trademarks of Texas Instruments.
All trademarks are the property of their respective owners.

10.5 Electrostatic Discharge Caution



This integrated circuit can be damaged by ESD. Texas Instruments recommends that all integrated circuits be handled with appropriate precautions. Failure to observe proper handling and installation procedures can cause damage.

ESD damage can range from subtle performance degradation to complete device failure. Precision integrated circuits may be more susceptible to damage because very small parametric changes could cause the device not to meet its published specifications.

10.6 Glossary

TI Glossary	This glossary lists and explains terms, acronyms, and definitions.

11 Revision History

NOTE: Page numbers for previous revisions may differ from page numbers in the current version.

DATE	REVISION	NOTES
August 2025	*	Initial Release

12 Mechanical, Packaging, and Orderable Information

The following pages include mechanical, packaging, and orderable information. This information is the most current data available for the designated devices. This data is subject to change without notice and revision of this document. For browser-based versions of this data sheet, refer to the left-hand navigation.

Copyright © 2025 Texas Instruments Incorporated

PACKAGE OUTLINE

YWF0008A



PowerWCSP - 0.3 mm max height

POWER CHIP SCALE PACKAGE

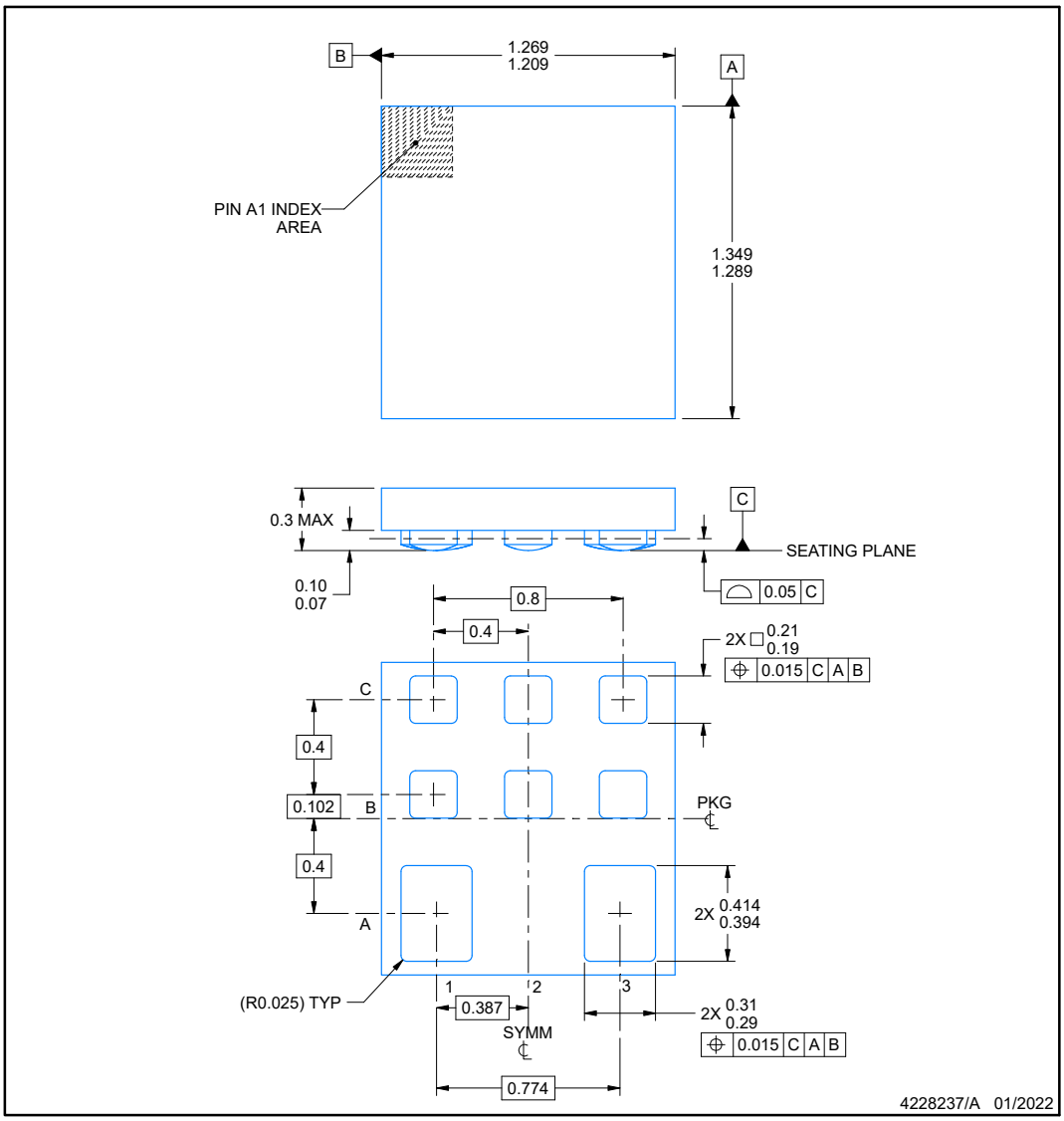

NOTES:

1. All linear dimensions are in millimeters. Any dimensions in parenthesis are for reference only. Dimensioning and tolerancing per ASME Y14.5M.
2. This drawing is subject to change without notice.

Copyright © 2025 Texas Instruments Incorporated

EXAMPLE BOARD LAYOUT

YWF0008A

PowerWCSP - 0.3 mm max height

POWER CHIP SCALE PACKAGE

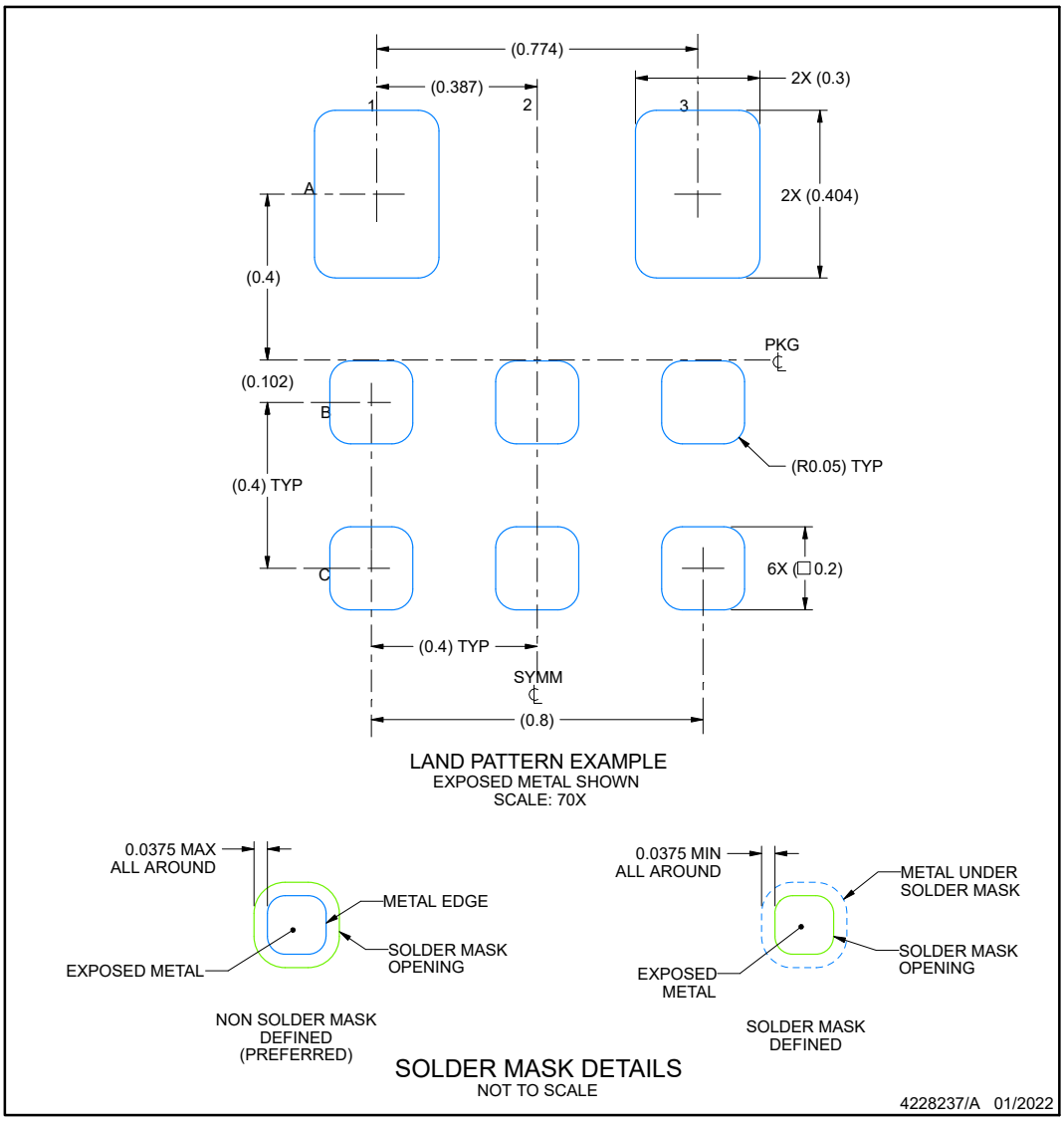

NOTES: (continued)

3. Final dimensions may vary due to manufacturing tolerance considerations and also routing constraints.
   For more information, see Texas Instruments literature number SLUA271 (www.ti.com/lit/slua271).

Copyright © 2025 Texas Instruments Incorporated

EXAMPLE STENCIL DESIGN

YWF0008A — **PowerWCSP - 0.3 mm max height**

POWER CHIP SCALE PACKAGE

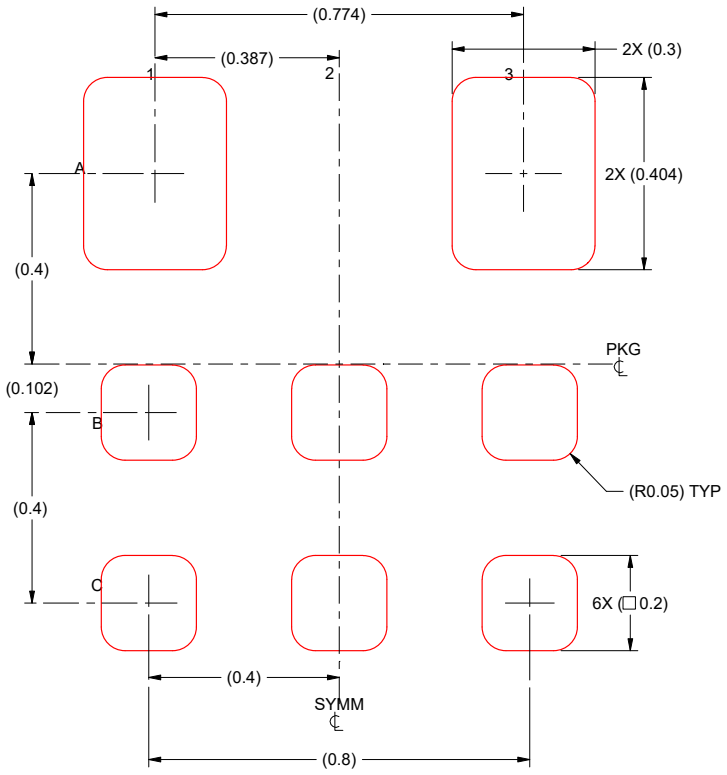

SOLDER PASTE EXAMPLE
BASED ON 0.075 mm THICK STENCIL
SCALE: 80X

4228237/A 01/2022

NOTES: (continued)

4. Laser cutting apertures with trapezoidal walls and rounded corners may offer better paste release.

Copyright © 2025 Texas Instruments Incorporated

PACKAGING INFORMATION

Orderable part number	Status (1)	Material type (2)	Package | Pins	Package qty | Carrier	RoHS (3)	Lead finish/ Ball material (4)	MSL rating/ Peak reflow (5)	Op temp (°C)	Part marking (6)
INA701AYWFR	Active	Production	DSBGA (YWF) | 8	3000 | LARGE T&R	Yes	Call TI	Level-1-260C-UNLIM	-40 to 125	1B

(1) **Status:** For more details on status, see our product life cycle.

(2) **Material type:** When designated, preproduction parts are prototypes/experimental devices, and are not yet approved or released for full production. Testing and final process, including without limitation quality assurance, reliability performance testing, and/or process qualification, may not yet be complete, and this item is subject to further changes or possible discontinuation. If available for ordering, purchases will be subject to an additional waiver at checkout, and are intended for early internal evaluation purposes only. These items are sold without warranties of any kind.

(3) **RoHS values:** Yes, No, RoHS Exempt. See the TI RoHS Statement for additional information and value definition.

(4) **Lead finish/Ball material:** Parts may have multiple material finish options. Finish options are separated by a vertical ruled line. Lead finish/Ball material values may wrap to two lines if the finish value exceeds the maximum column width.

(5) **MSL rating/Peak reflow:** The moisture sensitivity level ratings and peak solder (reflow) temperatures. In the event that a part has multiple moisture sensitivity ratings, only the lowest level per JEDEC standards is shown. Refer to the shipping label for the actual reflow temperature that will be used to mount the part to the printed circuit board.

(6) **Part marking:** There may be an additional marking, which relates to the logo, the lot trace code information, or the environmental category of the part.

Multiple part markings will be inside parentheses. Only one part marking contained in parentheses and separated by a "~" will appear on a part. If a line is indented then it is a continuation of the previous line and the two combined represent the entire part marking for that device.

Important Information and Disclaimer: The information provided on this page represents TI's knowledge and belief as of the date that it is provided. TI bases its knowledge and belief on information provided by third parties, and makes no representation or warranty as to the accuracy of such information. Efforts are underway to better integrate information from third parties. TI has taken and continues to take reasonable steps to provide representative and accurate information but may not have conducted destructive testing or chemical analysis on incoming materials and chemicals. TI and TI suppliers consider certain information to be proprietary, and thus CAS numbers and other limited information may not be available for release.

In no event shall TI's liability arising out of such information exceed the total purchase price of the TI part(s) at issue in this document sold by TI to Customer on an annual basis.

TAPE AND REEL INFORMATION

REEL DIMENSIONS

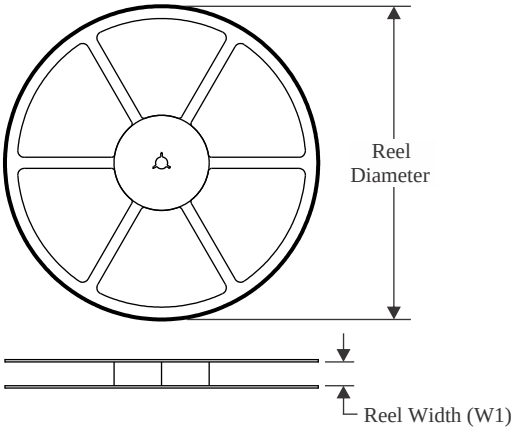

TAPE DIMENSIONS

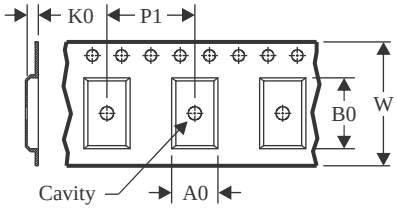

A0	Dimension designed to accommodate the component width
B0	Dimension designed to accommodate the component length
K0	Dimension designed to accommodate the component thickness
W	Overall width of the carrier tape
P1	Pitch between successive cavity centers

QUADRANT ASSIGNMENTS FOR PIN 1 ORIENTATION IN TAPE

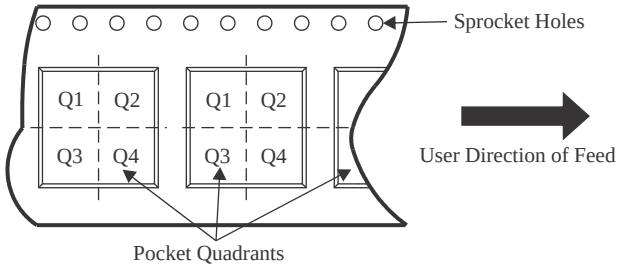

*All dimensions are nominal

Device	Package Type	Package Drawing	Pins	SPQ	Reel Diameter (mm)	Reel Width W1 (mm)	A0 (mm)	B0 (mm)	K0 (mm)	P1 (mm)	W (mm)	Pin1 Quadrant
INA701AYWFR	DSBGA	YWF	8	3000	180.0	8.4	1.35	1.43	0.38	4.0	8.0	Q1

TAPE AND REEL BOX DIMENSIONS

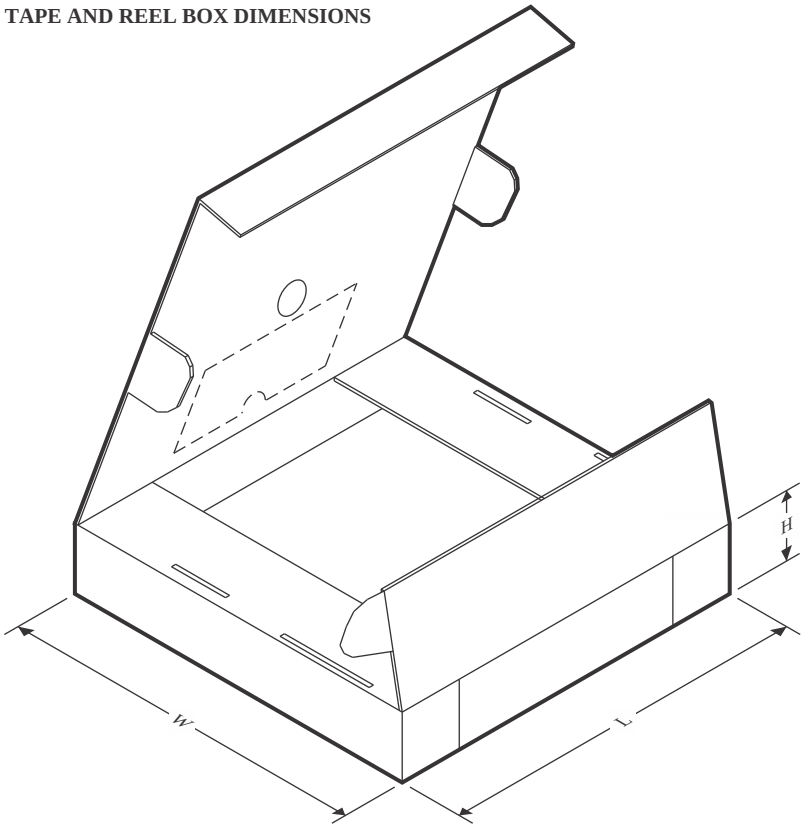

*All dimensions are nominal

Device	Package Type	Package Drawing	Pins	SPQ	Length (mm)	Width (mm)	Height (mm)
INA701AYWFR	DSBGA	YWF	8	3000	182.0	182.0	20.0

IMPORTANT NOTICE AND DISCLAIMER

TI PROVIDES TECHNICAL AND RELIABILITY DATA (INCLUDING DATASHEETS), DESIGN RESOURCES (INCLUDING REFERENCE DESIGNS), APPLICATION OR OTHER DESIGN ADVICE, WEB TOOLS, SAFETY INFORMATION, AND OTHER RESOURCES “AS IS” AND WITH ALL FAULTS, AND DISCLAIMS ALL WARRANTIES, EXPRESS AND IMPLIED, INCLUDING WITHOUT LIMITATION ANY IMPLIED WARRANTIES OF MERCHANTABILITY, FITNESS FOR A PARTICULAR PURPOSE OR NON-INFRINGEMENT OF THIRD PARTY INTELLECTUAL PROPERTY RIGHTS.

These resources are intended for skilled developers designing with TI products. You are solely responsible for (1) selecting the appropriate TI products for your application, (2) designing, validating and testing your application, and (3) ensuring your application meets applicable standards, and any other safety, security, regulatory or other requirements.

These resources are subject to change without notice. TI grants you permission to use these resources only for development of an application that uses the TI products described in the resource. Other reproduction and display of these resources is prohibited. No license is granted to any other TI intellectual property right or to any third party intellectual property right. TI disclaims responsibility for, and you fully indemnify TI and its representatives against any claims, damages, costs, losses, and liabilities arising out of your use of these resources.

TI’s products are provided subject to TI’s Terms of Sale, TI’s General Quality Guidelines, or other applicable terms available either on ti.com or provided in conjunction with such TI products. TI’s provision of these resources does not expand or otherwise alter TI’s applicable warranties or warranty disclaimers for TI products. Unless TI explicitly designates a product as custom or customer-specified, TI products are standard, catalog, general purpose devices.

TI objects to and rejects any additional or different terms you may propose.

Copyright © 2025, Texas Instruments Incorporated

Last updated 10/2025

ENTEGRECİ

Bu belge www.entegreci.com üzerinden sunulmaktadır.

Elektronik komponent tedarikinde Entegreci

Entegreci, Eskişehir merkezli, Türkiye geneline satış yapan bir elektronik komponent mağazasıdır. Entegreler (IC), mikrodenetleyiciler, transistörler, diyotlar, pasif elemanlar, konnektörler, modüller ve geliştirme kartları tek adetten seri üretim adetlerine kadar satılır. Ürün sayfalarında güncel stok durumunu, fiyatı ve datasheet bağlantısını bulabilirsiniz.

Parça koduyla arama

Üretici parça numarasını yazın; stok ve fiyatı hemen görün.

www.entegreci.com

Ürün kategorileri

Entegreden kapasitöre tüm elektronik komponent kategorileri.

Kategorilere göz atın

Üreticiler

Aradığınız üreticinin ürünlerini tek sayfada inceleyin.

Üreticileri görün

Toplu alım ve teklif

Listede olmayan ya da yüksek adetli parçalar için teklif isteyin.

Teklif isteyin

www.entegreci.com | **destek@entegreci.com** | **0850 305 90 34**

Entegreci is an online electronic components store based in Türkiye. Search by manufacturer part number to see stock, prices and datasheets for integrated circuits, microcontrollers, transistors, passive components and connectors, or request a quote for parts that are not listed.

Bu sayfa Entegreci tarafından eklenmiştir. Belgenin önceki sayfaları asıl yayıncısına aittir ve içeriği değiştirilmemiştir; en güncel sürüm için belgenin yayıncısına başvurun.