INA381-Q1 AEC-Q100, 26-V, 350-kHz Current Sense Amplifier With Integrated Overcurrent Comparator

1 Features

- Qualified for Automotive Applications
- AEC-Q100 Qualified With the Following Results:
  - Device Temperature Grade 1: –40°C to +125°C Ambient Operating Temperature
- Functional Safety-Capable
  - Documentation available to aid functional safety system design
- Common-mode input range: –0.2 V to +26 V
- High accuracy amplifier:
  - Offset voltage at T_A = 25°C
    - 500 µV (maximum) at V_{CM} = 12 V
    - 150 µV (maximum) at V_{CM} = 0 V
  - Offset voltage drift: 1 µV/°C (maximum)
  - Gain error: 1% (maximum) at 25°C
  - Gain error drift: 20 ppm/°C (maximum)
- Available amplifier gains:
  - INA381A1-Q1: 20 V/V
  - INA381A2-Q1: 50 V/V
  - INA381A3-Q1: 100 V/V
  - INA381A4-Q1: 200 V/V
- Open-drain comparator:
  - Hysteresis: 50 mV
  - Propagation delay: 400 ns (typical)
  - Alert threshold set through external reference voltage
  - Supports transparent and latching modes
- Package: VSSOP-10

2 Applications

- ADAS domain controller
- Body control module (BCM)
- Window module
- Roof motor module
- Seat position & fold module
- Interior heater module
- Telematics control unit
- Digital cockpit processing unit
- Automotive head unit

3 Description

The INA381-Q1 includes both a 26-V common-mode, current-sensing amplifier and a high-speed comparator. This device detects overcurrent conditions by measuring the voltage developed across a current-shunt resistor and comparing that voltage to a user-defined threshold limit set by the comparator reference pin. The current-shunt monitor can measure differential voltage signals on common-mode voltages that vary from –0.2 V up to 26 V, independent of the supply voltage.

The open-drain alert output can be configured to operate in two modes: transparent or latched. In transparent mode, the output status follows the input state. In latched mode, the alert output is cleared only when the latch is reset. The standalone comparator large-signal alert response time is less than 2 µs, allowing for quick detection of overcurrent events. The total system overcurrent protection response time provided by the INA381-Q1 is less than 10 µs.

This device operates from a single 2.7-V to 5.5-V supply, drawing a maximum supply current of 350 µA. The device is specified over an operating temperature range of –40°C to +125°C, and is available in the 10-pin VSSOP package.

Device Information(1)

PART NUMBER	PACKAGE	BODY SIZE (NOM)
INA381-Q1	VSSOP (10)	3.00 mm × 3.00 mm

(1) For all available packages, see the package option addendum at the end of the data sheet.

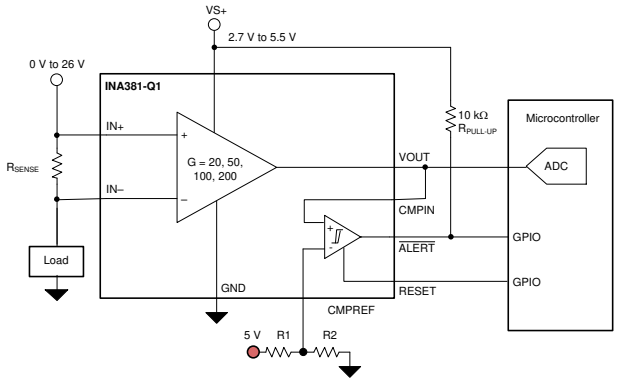

Typical Application

An IMPORTANT NOTICE at the end of this data sheet addresses availability, warranty, changes, use in safety-critical applications, intellectual property matters and other important disclaimers. PRODUCTION DATA.

Table of Contents

1 Features....1
2 Applications....1
3 Description....1
4 Revision History....2
5 Pin Configuration and Functions....3
6 Specifications....4
6.1 Absolute Maximum Ratings....4
6.2 ESD Ratings....4
6.3 Recommended Operating Conditions....4
6.4 Thermal Information....4
6.5 Electrical Characteristics....5
6.6 Typical Characteristics....6
7 Detailed Description....13
7.1 Overview....13
7.2 Functional Block Diagram....13
7.3 Feature Description....14
7.4 Device Functional Modes....17
8 Applications and Implementation....19
8.1 Application Information....19
8.2 Typical Applications....25
9 Power Supply Recommendations....29
10 Layout....30
10.1 Layout Guidelines....30
10.2 Layout Example....30
11 Device and Documentation Support....31
11.1 Documentation Support....31
11.2 Receiving Notification of Documentation Updates....31
11.3 Support Resources....31
11.5 Electrostatic Discharge Caution....31
11.6 Glossary....31
12 Mechanical, Packaging, and Orderable Information....31

4 Revision History

NOTE: Page numbers for previous revisions may differ from page numbers in the current version.

Changes from Revision * (March 2020) to Revision A (March 2021)	Page
• Added Functional Safety-Capable bullets	1

Copyright © 2021 Texas Instruments Incorporated

5 Pin Configuration and Functions

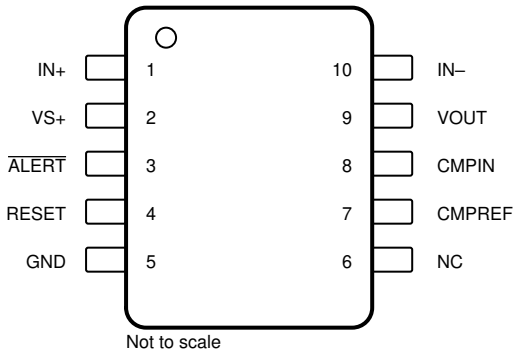

Figure 5-1. DGS Package 10-Pin VSSOP Top View

Table 5-1. Pin Functions

PIN		TYPE	DESCRIPTION
NAME	DGS		
$\overline{\text{ALERT}}$	3	Digital output	Overlimit alert, active low, open-drain output
CMPIN	8	Analog input	Signal input to the comparator
CMPREF	7	Analog input	Input reference to the comparator
GND	5	Ground	Device ground. Connect the thermal pad to the system ground. See the layout example in the *Layout Example* section.
IN–	10	Analog input	Connect this pin to the load side of the shunt resistor
IN+	1	Analog input	Connect this pin to the supply side of the shunt resistor
NC	6	—	Not internal connection to device. This pin can be left floating, grounded, or connected to the supply.
RESET	4	Digital input	Transparent or latch mode selection input. See *Alert Modes* for a detailed description on pin connections.
VOUT	9	Analog output	Current-sense amplifier output voltage
VS+	2	Supply	Power supply: 2.7 V to 5.5 V

Copyright © 2021 Texas Instruments Incorporated

6 Specifications

6.1 Absolute Maximum Ratings

over operating free-air temperature range (unless otherwise noted)(1)

			MIN	MAX	UNIT
V_S	Supply voltage			6	V
V_{IN+},$V_{IN–}$	Analog inputs (IN+, IN–)	Differential (V_{IN+}) – ($V_{IN–}$)(2)	–26	26	V
		Common-mode (3)	GND – 0.3	26	
V_I	Analog input	CMPIN	GND – 0.3	(V_S) + 0.3	V
		CMPREF	GND – 0.3	(V_S) + 0.3	
V_O	Analog output	OUT	GND – 0.3	(V_S) + 0.3	V
	Digital input	RESET	GND – 0.3	(V_S) + 0.3	V
	Digital output	$\overline{\text{ALERT}}$	GND – 0.3	6	V
T_J	Junction temperature			150	°C
T_{stg}	Storage temperature		–65	150	°C

(1) Stresses beyond those listed under *Absolute Maximum Ratings* may cause permanent damage to the device. These are stress ratings only, which do not imply functional operation of the device at these or any other conditions beyond those indicated under *Recommended Operating Conditions*. Exposure to absolute-maximum-rated conditions for extended periods may affect device reliability.

(2) V_{IN+} and $V_{IN–}$ are the voltages at the IN+ and IN– pins, respectively.

(3) Input voltage may exceed the voltage shown without causing damage to the device if the current at that terminal is limited to 5 mA.

6.2 ESD Ratings

			VALUE	UNIT
$V_{(ESD)}$	Electrostatic discharge	Human-body model (HBM), per AEC Q100-002(1) HBM ESD Classification Level 2	±3000	V
		Charged-device model (CDM), per AEC Q100-011 CDM ESD Classification Level C6	±1000	

(1) AEC Q100-002 indicates that HBM stressing shall be in accordance with the ANSI/ESDA/JEDEC JS-001 specification.

6.3 Recommended Operating Conditions

over operating free-air temperature range (unless otherwise noted)

		MIN	NOM	MAX	UNIT
V_{CM}	Common-mode input voltage	–0.2	12	26	V
V_S	Operating supply voltage	2.7	5	5.5	V
TA	Operating free-air temperature	–40		+125	°C

6.4 Thermal Information

THERMAL METRIC(1)		INA381-Q1 DGS (VSSOP) 10 PINS	UNIT
$R_{\theta JA}$	Junction-to-ambient thermal resistance	188.6	°C/W
$R_{\theta JC(top)}$	Junction-to-case (top) thermal resistance	78.1	°C/W
$R_{\theta JB}$	Junction-to-board thermal resistance	111.0	°C/W
Ψ_{JT}	Junction-to-top characterization parameter	17.5	°C/W
Ψ_{JB}	Junction-to-board characterization parameter	109.2	°C/W
$R_{\theta JC(bot)}$	Junction-to-case (bottom) thermal resistance	N/A	°C/W

(1) For more information about traditional and new thermal metrics, see the Semiconductor and IC Package Thermal Metrics application report.

Copyright © 2021 Texas Instruments Incorporated

6.5 Electrical Characteristics

at T_A = 25°C, V_{SENSE} = V_{IN+} – $V_{IN–}$ = 10 mV, V_S = 5 V, V_{IN+} = 12 V, and CMPREF = 2 V (unless otherwise noted)

PARAMETER		TEST CONDITIONS	MIN	TYP	MAX	UNIT
INPUT						
CMRR	Common-mode rejection ratio, RTI(1)	V_{IN+} = 0 V to 26 V, T_A= –40°C to +125°C	84	100		dB
V_{OS}	Offset voltage, RTI(1)	V_{IN+} = 12 V, $V_{IN–}$ = 12 V		±100	±500	µV
		V_{IN+} = 0 V, $V_{IN–}$ = 0 V		±25	±150	
dV_{OS}/dT	Offset voltage drift, RTI(1)	T_A= –40°C to +125°C		0.1	1	µV/°C
PSRR	Power-supply rejection ratio	V_S = 2.7 V to 5.5 V, T_A= –40°C to +125°C		±8	±40	µV/V
I_B	Input bias current	V_{SENSE} = 0 mV, I_{B+}, $I_{B–}$		80		µA
I_{OS}	Input offset current	V_{SENSE} = 0 mV		±0.05		µA
OUTPUT						
G	Gain	INA381A1-Q1		20		V/V
		INA381A2-Q1		50		
		INA381A3-Q1		100		
		INA381A4-Q1		200		
E_G	Gain error	VOUT = 0.5 V to V_S – 0.5 V		±0.1%	±1%	
	Gain error drift	T_A= –40°C to +125°C		1.5	20	ppm/°C
	Nonlinearity error	V_{OUT} = 0.5 V to V_S – 0.5 V		±0.01%		
	Maximum capacitive load	No sustained oscillation		1		nF
VOLTAGE OUTPUT						
	Swing to V_S power-supply rail	R_L = 10 kΩ to GND, T_A= –40°C to +125°C		V_S – 0.02	V_S – 0.05	V
	Swing to GND(2)	R_L = 10 kΩ to GND, T_A= –40°C to +125°C		V_{GND} + 0.0005	V_{GND} + 0.005	V
FREQUENCY RESPONSE						
BW	Bandwidth	INA381A1-Q1		350		kHz
		INA381A2-Q1		210		
		INA381A3-Q1		150		
		INA381A4-Q1		105		
SR	Slew rate			2		V/µs
NOISE						
	Voltage noise density			40		nV/√Hz
COMPARATOR						
t_p	Propagation delay time, comparator only	CMPIN Input overdrive = 20 mV		0.4	1	µs
	Large-signal propagation delay, comparator only	CMPIN step = 0.5 V to 4.5, V_{CMPREF} = 4 V		0.4	2	
	Small signal total alert propogation delay, comparator and amplifier	Input overdrive = 1 mV		2	5	
	Slew rate limited total alert propagation delay, comparator and amplifier	V_{OUT} = 0.5 V to 4.5, V_{CMPREF} = 4 V		3	10	
V_{OS}	Comparator offset voltage			±1	±5	mV
HYS	Hysteresis			50		mV
V_{IH}	High-level input voltage		1.4		6	V
V_{IL}	Low-level input voltage		0		0.4	V
V_{OL}	Alert low-level output voltage	I_{OL} = 3 mA		70	300	mV
	$\overline{ALERT}$ pin leakage input current	V_{OH} = 3.3 V		0.1	1	µA
	Digital leakage input current	0 ≤ V_{IN} ≤ V_S		1		µA
POWER SUPPLY						
I_Q	Quiescent current	V_{SENSE} = 10 mV, T_A = +25°C		250	350	µA
		T_A = –40°C to +125°C			450	

(1) RTI = referred-to-input.

(2) Swing specifications are tested with an overdriven input condition.

Copyright © 2021 Texas Instruments Incorporated

6.6 Typical Characteristics

at T_A = 25°C, V_S = 5 V, V_{IN+} = 12 V, and alert pullup resistor = 10 kΩ (unless otherwise noted)

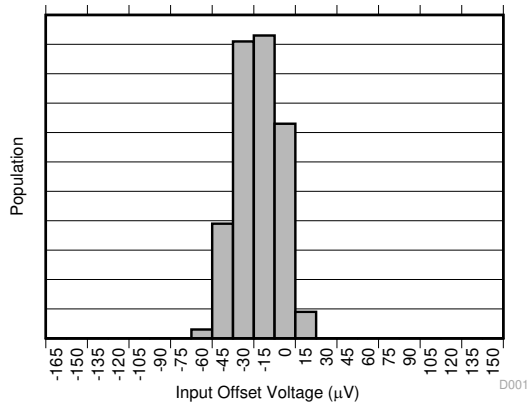

V_{IN+} = 0 V

Figure 6-1. Input Offset Voltage Production Distribution (INA381A1-Q1)

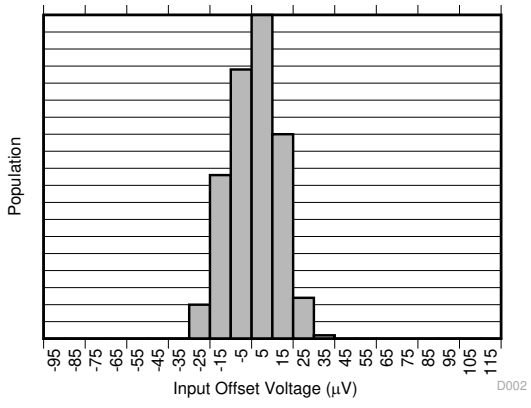

V_{IN+} = 0 V

Figure 6-2. Input Offset Voltage Production Distribution (INA381A2-Q1)

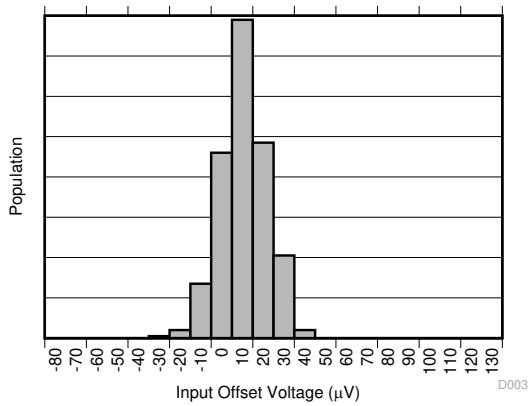

V_{IN+} = 0 V

Figure 6-3. Input Offset Voltage Production Distribution (INA381A3-Q1)

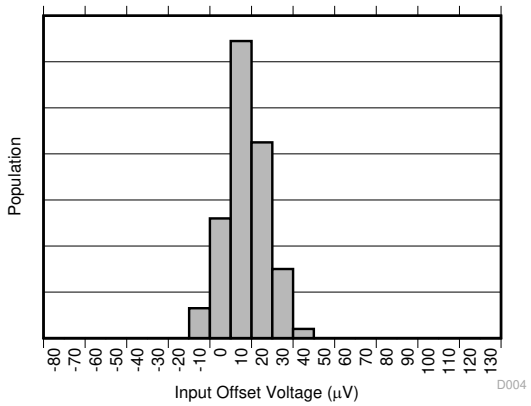

V_{IN+} = 0 V

Figure 6-4. Input Offset Voltage Production Distribution (INA381A4-Q1)

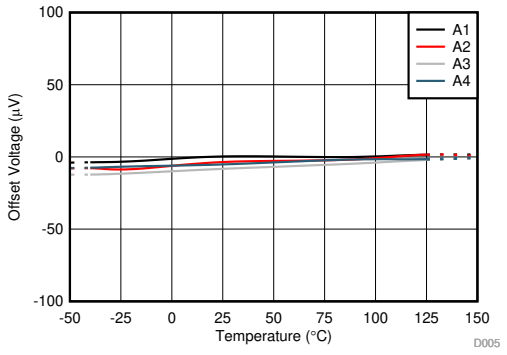

V_{IN+} = 0 V

Figure 6-5. Offset Voltage vs. Temperature

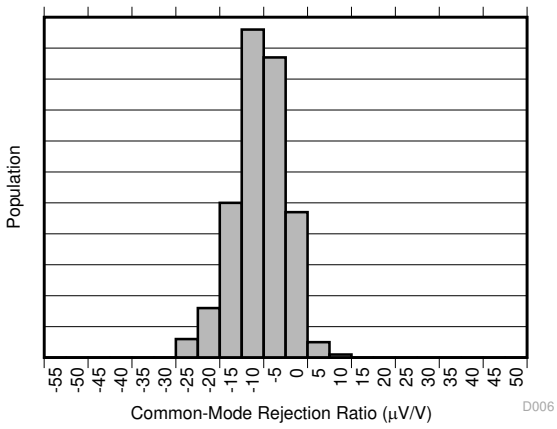

Figure 6-6. Common-Mode Rejection Production Distribution (INA381A1-Q1)

Copyright © 2021 Texas Instruments Incorporated

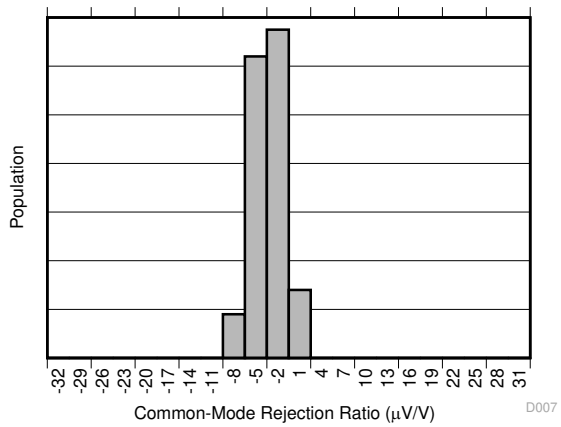

Figure 6-7. Common-Mode Rejection Production Distribution (INA381A2-Q1)

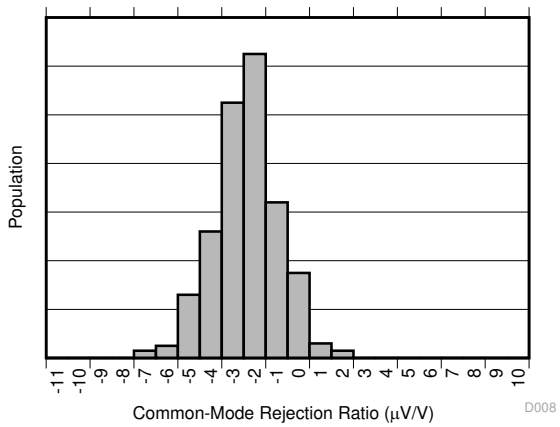

Figure 6-8. Common-Mode Rejection Production Distribution (INA381A3-Q1)

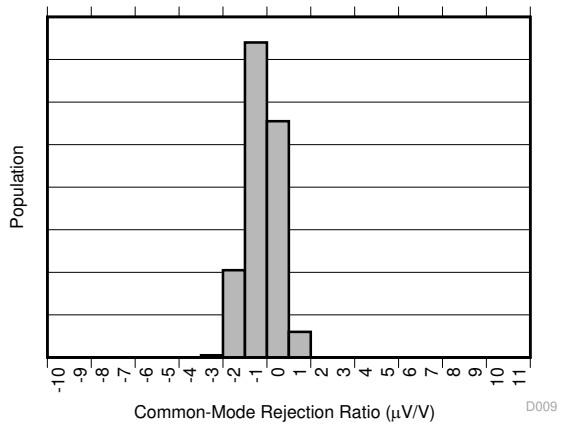

Figure 6-9. Common-Mode Rejection Production Distribution (INA381A4-Q1)

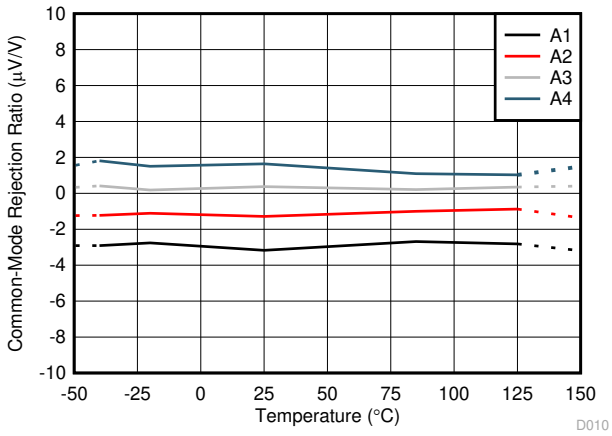

Figure 6-10. Common-Mode Rejection Ratio vs. Temperature

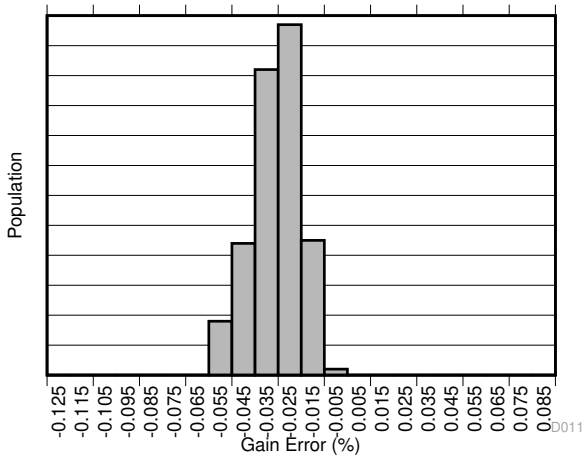

Figure 6-11. Gain Error Production Distribution (INA381A1-Q1)

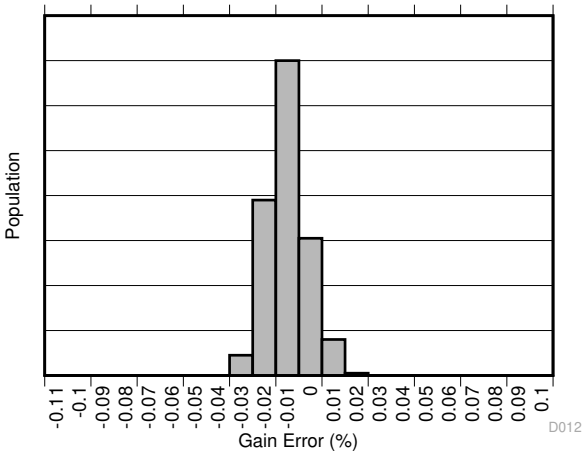

Figure 6-12. Gain Error Production Distribution (INA381A2-Q1)

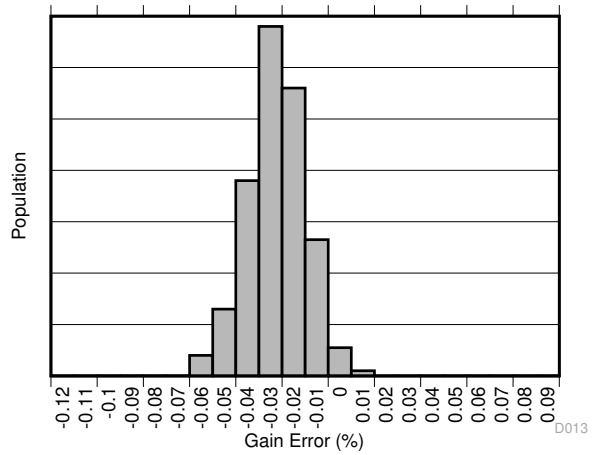

Figure 6-13. Gain Error Production Distribution (INA381A3-Q1)

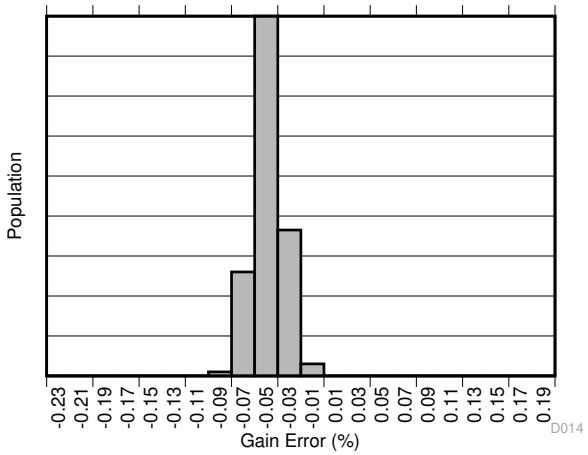

Figure 6-14. Gain Error Production Distribution (INA381A4-Q1)

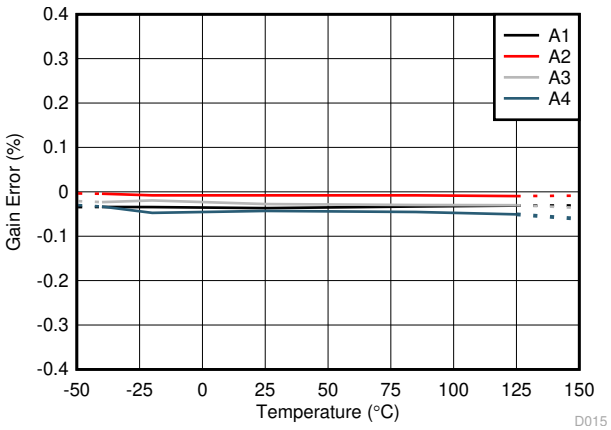

Figure 6-15. Gain Error vs. Temperature

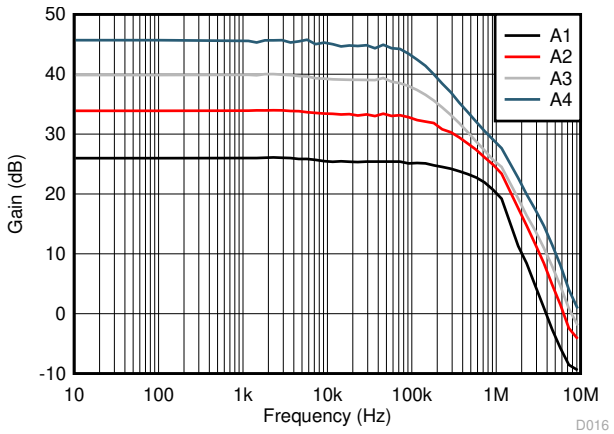

Figure 6-16. Gain vs. Frequency

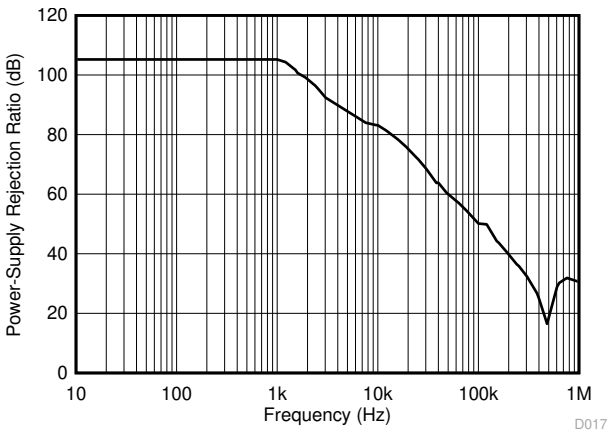

Figure 6-17. Power-Supply Rejection Ratio vs. Frequency

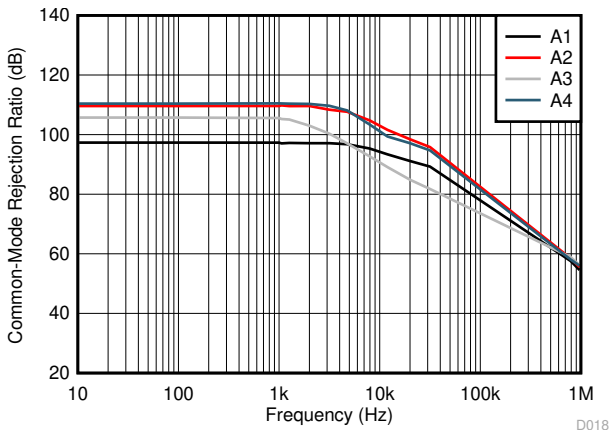

Figure 6-18. Common-Mode Rejection Ratio vs. Frequency

Copyright © 2021 Texas Instruments Incorporated

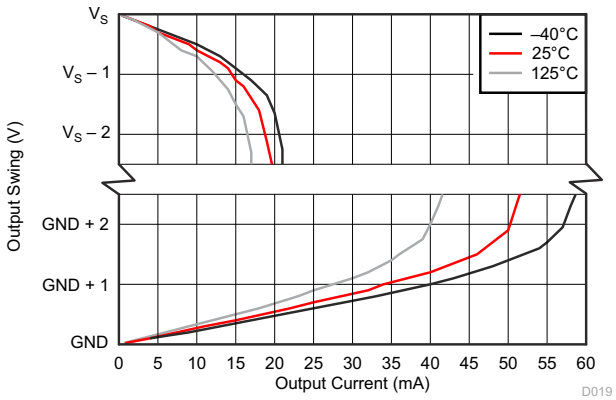

Figure 6-19. Output Voltage Swing vs. Output Current

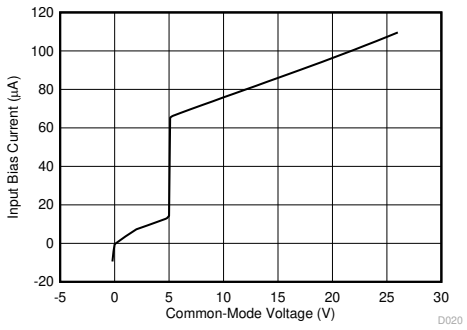

Supply voltage = 5 V

Figure 6-20. Input Bias Current vs. Common-Mode Voltage

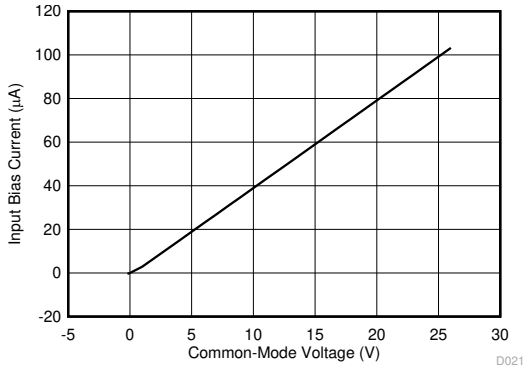

Supply voltage = 0 V

Figure 6-21. Input Bias Current vs. Common-Mode Voltage (Both Inputs, Shutdown)

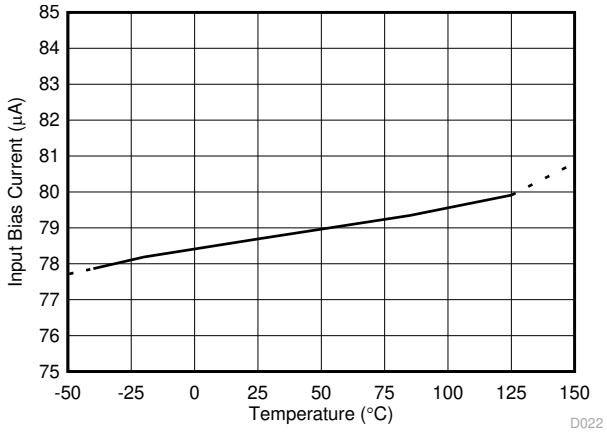

Figure 6-22. Input Bias Current vs. Temperature

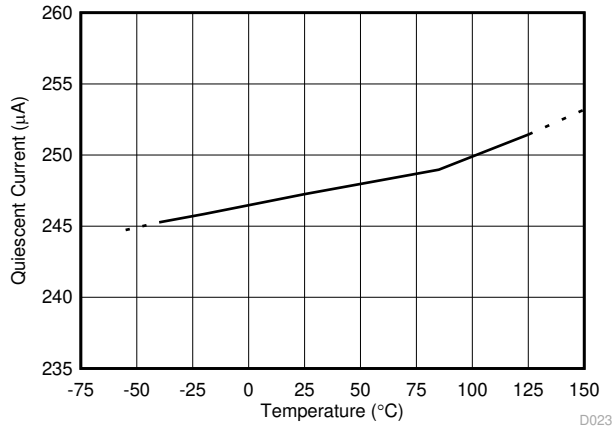

Figure 6-23. Quiescent Current vs. Temperature

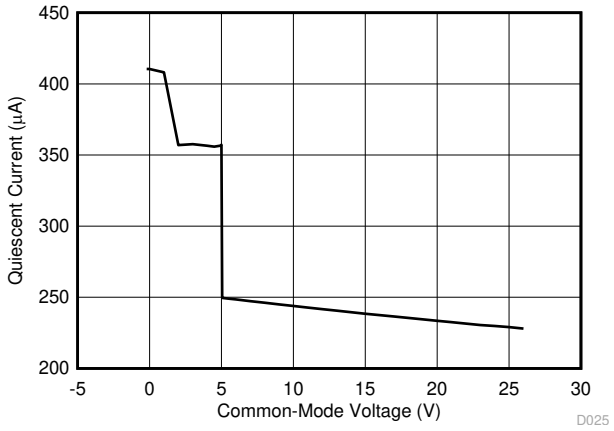

Figure 6-24. Quiescent Current vs. Common-Mode Voltage

Copyright © 2021 Texas Instruments Incorporated

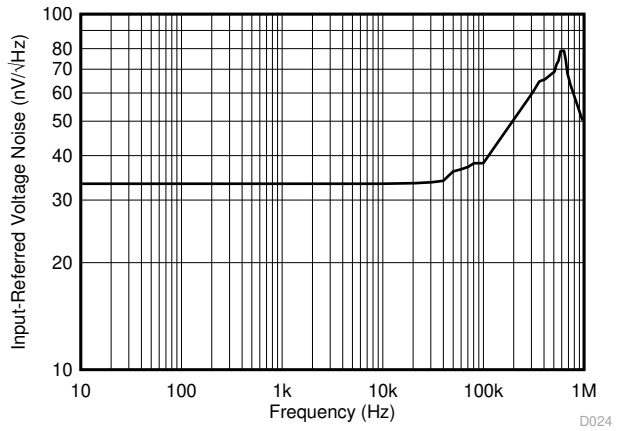

Figure 6-25. Input-Referred Voltage Noise vs. Frequency (INA381A3-Q1 Devices)

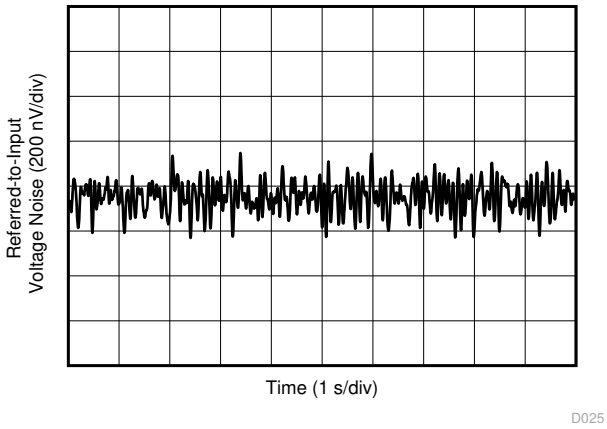

Figure 6-26. 0.1-Hz to 10-Hz Voltage Noise (Referred-to-Input)

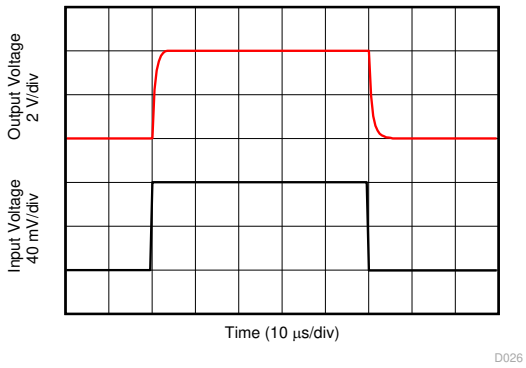

80-mV_{PP} input step

Figure 6-27. Step Response

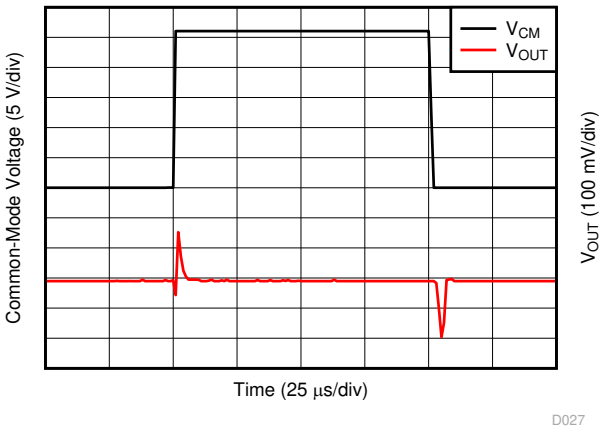

Figure 6-28. Common-Mode Voltage Transient Response

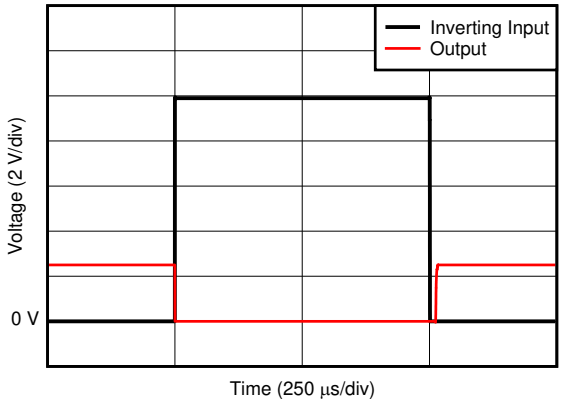

Figure 6-29. Inverting Differential Input Overload

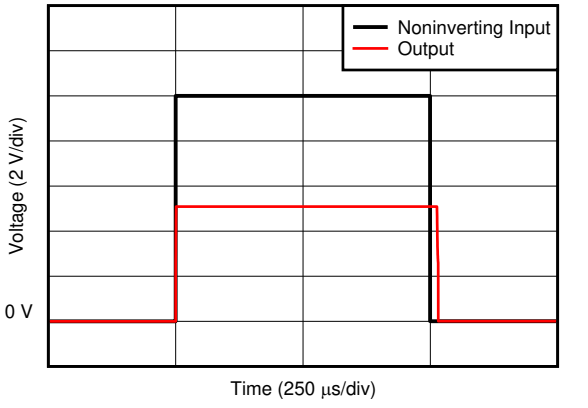

Figure 6-30. Noninverting Differential Input Overload

Copyright © 2021 Texas Instruments Incorporated

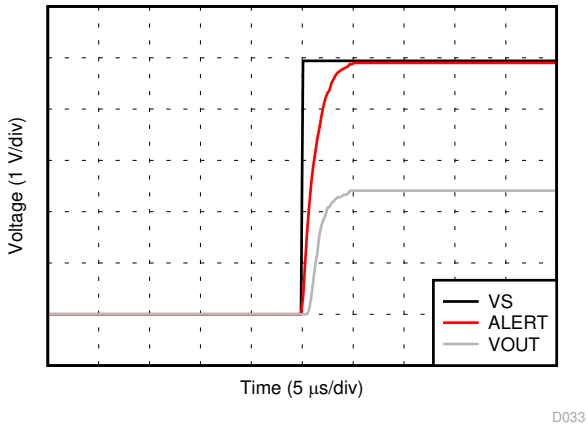

Figure 6-31. Start-Up Response

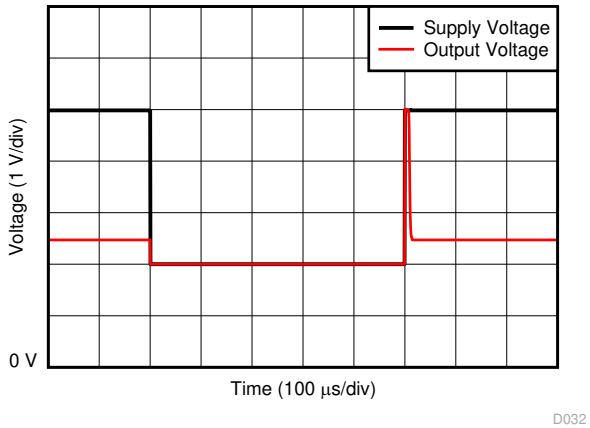

Figure 6-32. Brownout Recovery

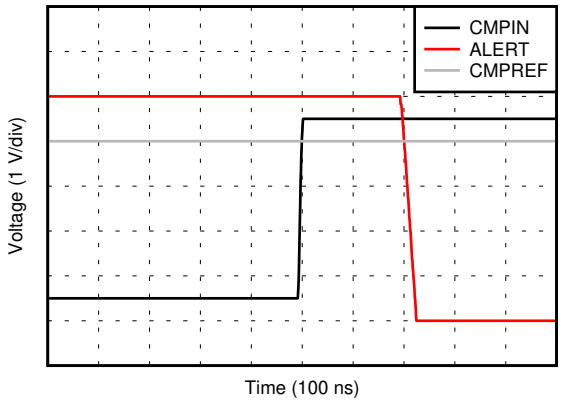

Figure 6-33. Comparator Propagation Delay

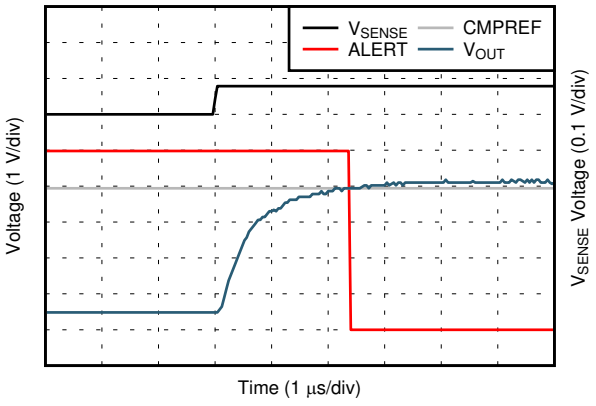

Figure 6-34. V_{SENSE} Voltage Response

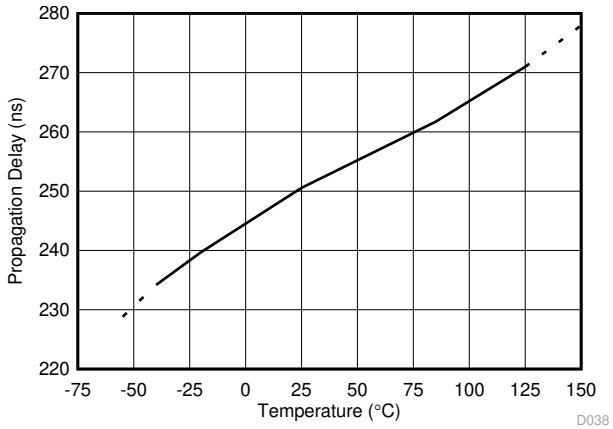

Figure 6-35. Comparator Propagation Delay vs. Temperature

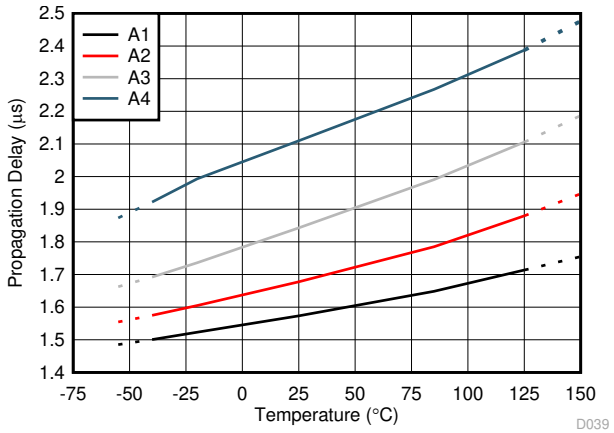

Figure 6-36. Total Propagation Delay vs. Temperature

Copyright © 2021 Texas Instruments Incorporated

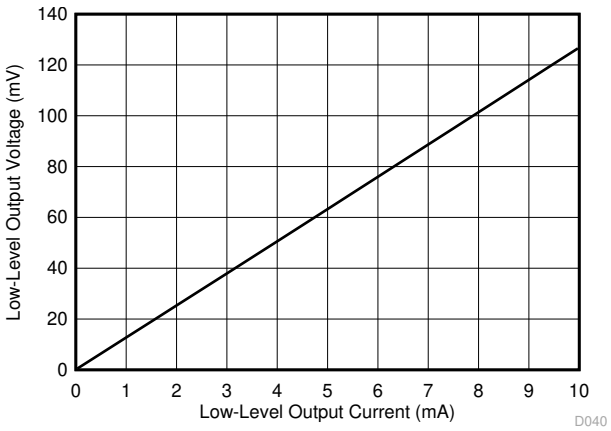

Figure 6-37. Low-Level Output Voltage vs. Low-Level Output Current

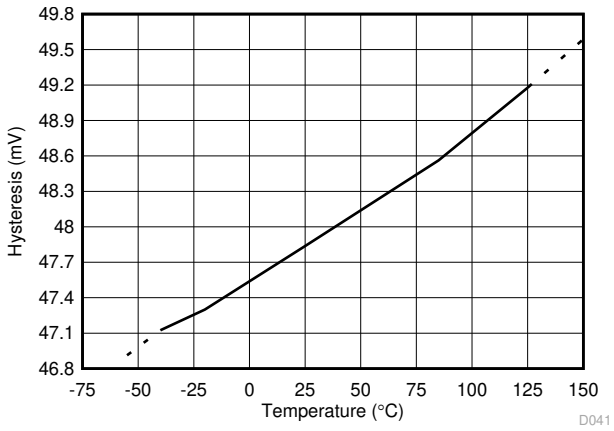

Figure 6-38. Hysteresis vs. Temperature

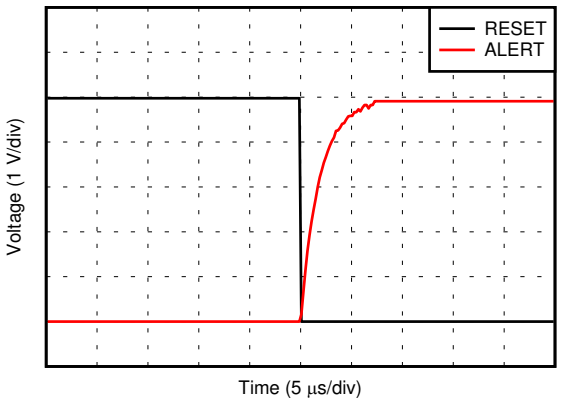

Figure 6-39. Reset and Alert Voltage Response

Copyright © 2021 Texas Instruments Incorporated

7 Detailed Description

7.1 Overview

The INA381-Q1 is a zero-drift topology, current-sensing amplifier with an integrated comparator that can be used in both low-side and high-side current-sensing and protection applications. This specially designed, current-sensing amplifier accurately measures voltages developed across current-sensing resistors (also known as *current-shunt resistors*) on common-mode voltages that far exceed the supply voltage powering the device. Current can be measured on input voltage rails as high as 26 V, and the device can be powered from supply voltages as low as 2.7 V. The device can also withstand the full 26-V common-mode voltage at the input pins when the supply voltage is removed without causing damage.

The zero-drift topology enables high-precision measurements with maximum input offset voltages as low as 150 µV, and a temperature contribution of only 1 µV/°C over the full temperature range of –40°C to +125°C. The low total offset voltage of the INA381-Q1 enables the use of smaller current-sense resistor values, and allows for more efficient system operation without sacrificing measurement accuracy due to the smaller input signal.

The device uses a reference input that simplifies setting the corresponding current threshold level to use for out-of-range comparison. Combining the precision measurement of the current-sense amplifier and the onboard comparator enables an all-in-one overcurrent detection device. This combination creates a highly-accurate design that quickly detects out-of-range conditions, and allows the system to take corrective actions to prevent potential component or system-wide damage.

7.2 Functional Block Diagram

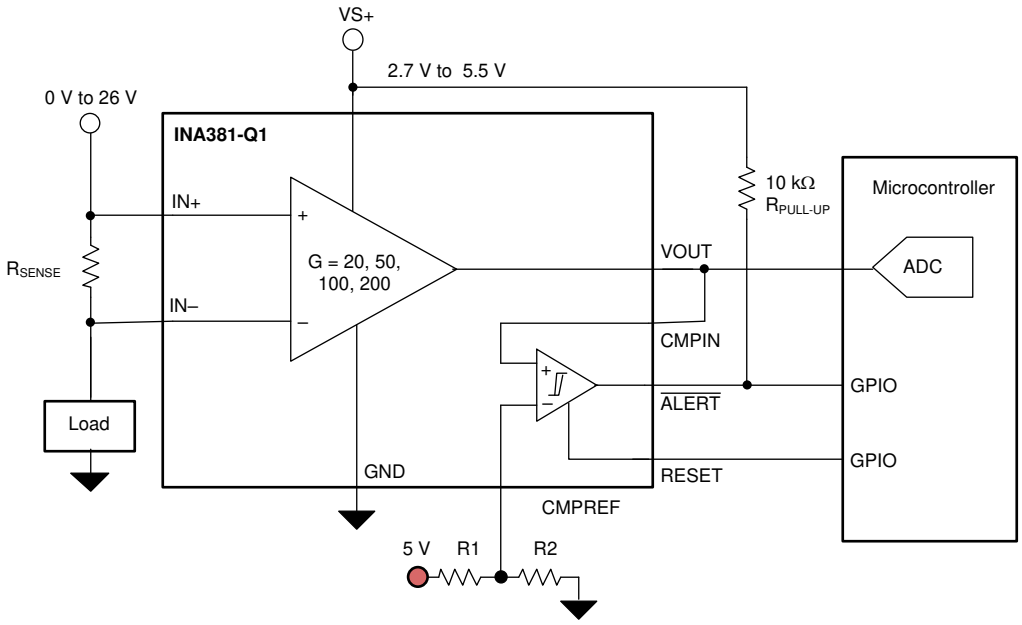

7.3 Feature Description

7.3.1 Wide Input Common-Mode Voltage Range

The INA381-Q1 supports input common-mode voltages from –0.2 V to +26 V. As a result of the internal topology, the common-mode range is not restricted by the power-supply voltage (V_S) as long as V_S stays within the operational range of 2.7 V to 5.5 V. As Figure 7-1 shows, the ability to operate with common-mode voltages greater or less than V_S allows the INA381-Q1 to be used in high-side, as well as low-side, current-sensing applications.

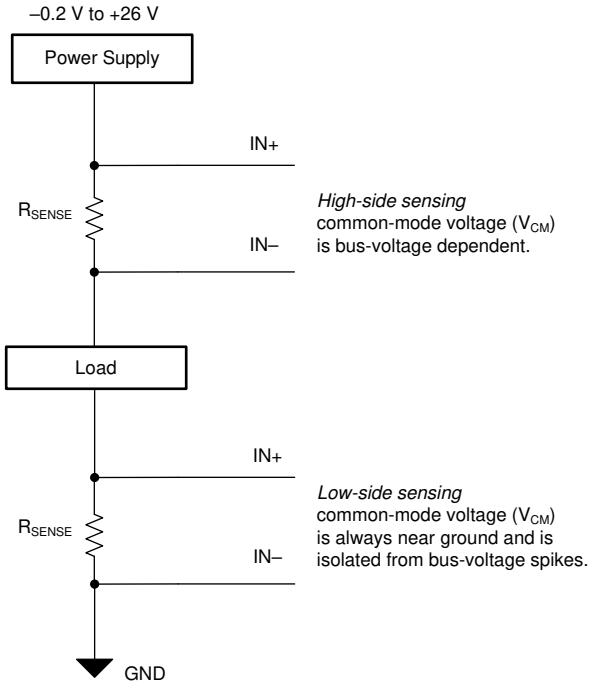

Figure 7-1. High-Side and Low-Side Current Sensing

7.3.2 Precise Low-Side Current Sensing

When used in low-side current-sensing applications, the offset voltage of the INA381-Q1 is less than 150 µV. The low offset performance of the device has several benefits. First, the low offset allows the device to be used in applications that must measure current over a wide dynamic range. In this case, the low offset voltage improves accuracy when the sense currents are on the low end of the measurement range. Another advantage of low offset voltage is the ability to sense lower voltage drops across the sense resistor accurately, thus allowing for a lower-value shunt resistor. Lower-value shunt resistors reduce power loss in the current-sense circuit, and help improve the power efficiency of the end application.

The gain error of the INA381-Q1 is specified to be within 1% of the actual value. As the sensed voltage becomes much larger than the offset voltage, this gain error becomes the dominant source of error in the current-sense measurement.

7.3.3 High Bandwidth and Slew Rate

The INA381-Q1 supports small-signal bandwidths as high as 350 kHz, and large-signal slew rates of 2 V/µs. The ability to detect rapid changes in the sensed current, as well as the ability to quickly slew the output, makes the INA381-Q1 a good choice for applications that require a quick response to input current changes. One application that requires high bandwidth and slew rate is low-side motor control, where the ability to follow rapid changing current in the motor allows for more accurate control over a wider operating range. Another application that requires higher bandwidth and slew rates is system fault detection. The integrated comparator within the INA381-Q1 is designed to quickly detect when the sense current is out-of-range, and provide a digital output on the $\overline{\text{ALERT}}$ pin for quicker and faster responses.

Copyright © 2021 Texas Instruments Incorporated

7.3.4 Alert Output

The $\overline{\text{ALERT}}$ pin is an active-low, open-drain output pulls low when the input conditions are out-of-range. This open-drain output pin is recommended to include a 10-kΩ pullup resistor to the supply voltage. This open-drain pin can be pulled up to a voltage beyond the supply voltage, V_S, but must not exceed 5.5 V.

Figure 7-2 shows the alert output response of the internal comparator. When the output voltage of the amplifier is less than the reference voltage set on CMPREF, the comparator output is in the default high state. When the amplifier output voltage exceeds the reference voltage set at the CMPREF pin, the comparator output becomes active and pulls low. This active low output indicates that the measured signal at the amplifier input has exceeded the programmed threshold level, indicating an overcurrent or out-of-range condition has occurred. See the *Alert Modes* section for more information about how to set the alert output behavior.

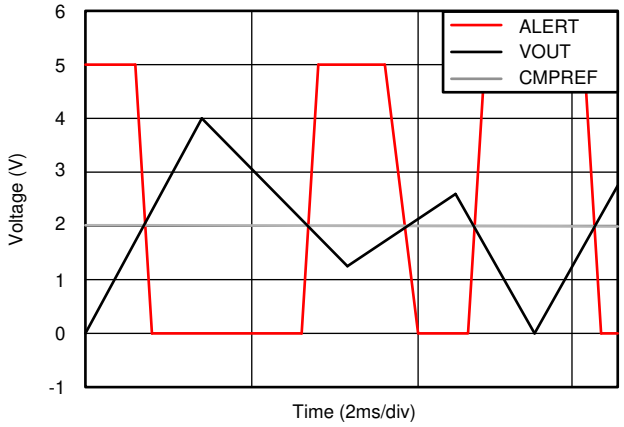

Figure 7-2. Overcurrent Alert Response

7.3.5 Adjustable Overcurrent Threshold

The VOUT voltage is the amplified voltage developed across the current-sensing resistor. The signal developed at the VOUT pin is the input voltage across the IN+ and IN– pins multiplied by the gain of the amplifier. The INA381-Q1 has four gain options, as shown in Figure 7-3: 20 V/V, 50 V/V, 100 V/V, and 200 V/V. If additional hysteresis is not required, directly connect the VOUT pin to the CMPIN pin.

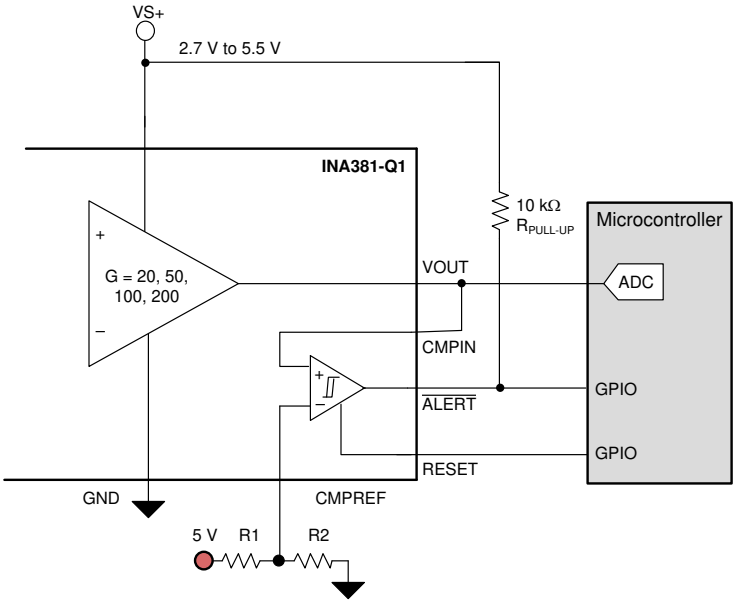

Figure 7-3. Resistor Divider Voltage

The device determines if an overcurrent event is present by comparing the voltage on the CMPIN pin to the corresponding signal developed at the CMPREF pin. The threshold voltage for the CMPREF pin can be set with a resistive divider, or by connecting an external voltage source (such as a reference generator device). Figure 7-4 depicts the REF3140 used as an external reference source.

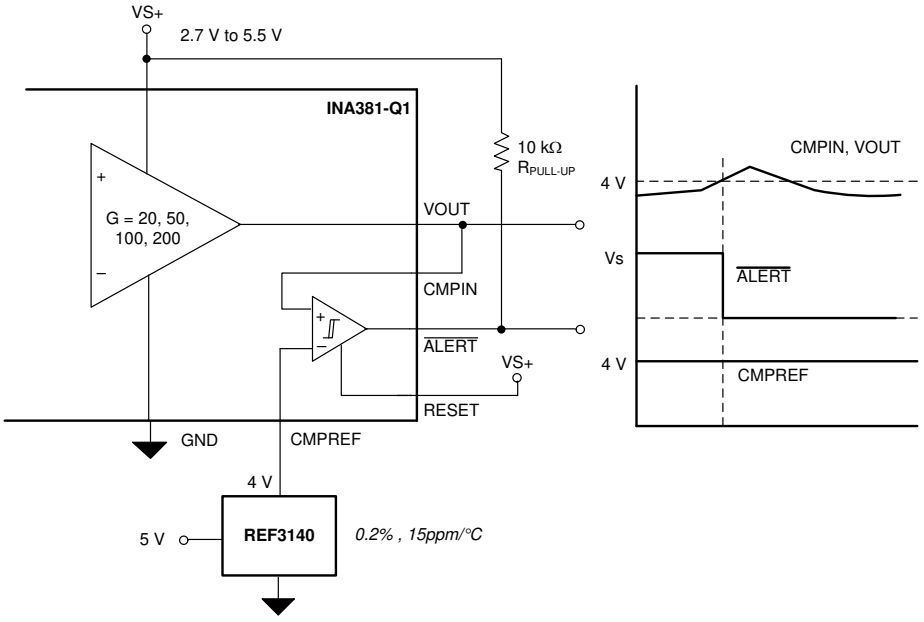

Figure 7-4. External Reference Voltage

7.3.6 Comparator Hysteresis

The onboard comparator in the INA381-Q1 is designed to reduce the possibility of oscillations in the alert output when the measured signal level is near the overlimit threshold level as a result of noise. When the voltage (V_{CMPIN}) exceeds the voltage developed at the CMPREF pin, the $\overline{ALERT}$ pin asserts and pulls low. The output voltage must drop to less than the CMPREF pin threshold voltage, as shown in Figure 7-5, by the hysteresis level of 50 mV so that the $\overline{ALERT}$ pin deasserts and returns to the nominal high state. The INA381-Q1 is designed with a hysteresis of 50 mV.

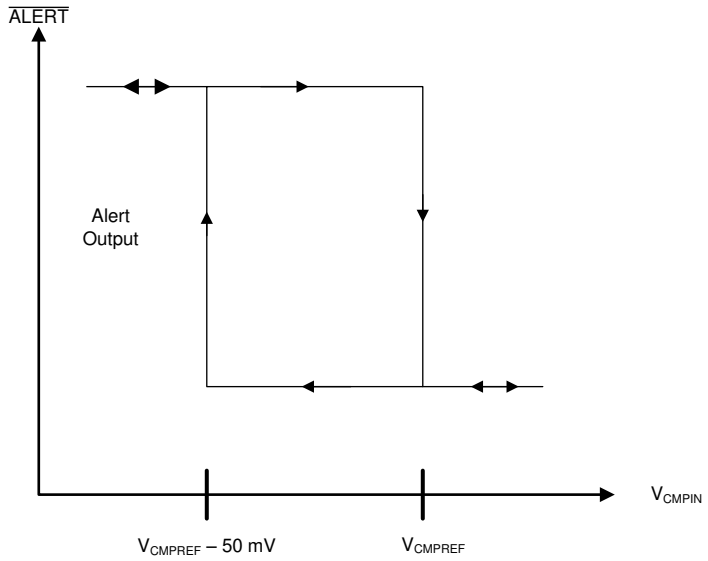

Figure 7-5. Typical Comparator Hysteresis

Copyright © 2021 Texas Instruments Incorporated

7.4 Device Functional Modes

7.4.1 Alert Modes

The device has two output operating modes, transparent and latched, that are selected based on the RESET pin setting. These modes change how the $\overline{\text{ALERT}}$ pin responds after an alert when the overcurrent condition is removed.

7.4.1.1 Transparent Output Mode

The device is set to transparent mode when the RESET pin is pulled low, allowing the output alert state to change and follow the input signal with respect to the programmed alert threshold. For example, when the differential input signal exceeds the alert threshold, the alert output pin is pulled low. When the differential input signal drops to less than the alert threshold, the output returns to the default high-output state. A common implementation using the device in transparent mode is to connect the $\overline{\text{ALERT}}$ pin to a hardware interrupt input on a microcontroller. When an overcurrent condition is detected and the $\overline{\text{ALERT}}$ pin is pulled low, the controller interrupt pin detects the output state change and begins making changes to the system operation required to address the overcurrent condition. Under this configuration, the $\overline{\text{ALERT}}$ pin high-to-low transition is captured by the microcontroller, and the output returns to the default high state when the overcurrent event is removed.

7.4.1.2 Latch Output Mode

Some applications cannot continuously monitor the state of the output $\overline{\text{ALERT}}$ pin to detect an overcurrent condition, as described in the *Transparent Output Mode* section. A typical example of this type of application is a system that only periodically polls the $\overline{\text{ALERT}}$ pin state to determine if the system is functioning correctly. If the device is set to transparent mode in this type of application, the state change of the $\overline{\text{ALERT}}$ pin can be missed when $\overline{\text{ALERT}}$ is pulled low if the out-of-range condition does not appear during one of these periodic polling events. Latch output mode is specifically intended to accommodate these applications.

As shown in Table 7-1, the device is placed into the corresponding output mode based on the signal connected to RESET. The difference between latch mode and transparent mode is how the alert output responds when an overcurrent event ends. In transparent mode (RESET = low), when the differential input signal drops below the limit threshold level after the $\overline{\text{ALERT}}$ pin asserts because of an overcurrent event, the state of the $\overline{\text{ALERT}}$ pin returns to the default high setting to indicate that the overcurrent event is complete.

Table 7-1. Output Mode Settings

OUTPUT MODE	RESET PIN SETTING
Transparent	RESET = low
Latch	RESET = high

In latch mode (RESET = high), when an overlimit condition is detected and the $\overline{\text{ALERT}}$ pin is pulled low, the $\overline{\text{ALERT}}$ pin does not return to the default high state when the differential input signal drops to less than the alert threshold level. To clear the alert, the RESET pin must be pulled low for at least 100 ns. If the differential input signal is less than the alert threshold, pull the RESET pin low to return $\overline{\text{ALERT}}$ to the default high level. If the input signal exceeds the threshold limit when the RESET pin is pulled low, the $\overline{\text{ALERT}}$ pin remains low. When the alert condition is detected by the system controller, set the RESET pin back to high to place the device back in latch mode.

Copyright © 2021 Texas Instruments Incorporated

Figure 7-6 shows the latch and transparent modes. In Figure 7-6, when V_{IN} drops to less than the V_{LIMIT} threshold for the first time, the RESET pin pulls high. With the RESET pin pulled high, the device is set to latch mode so that the alert output state does not return high when the input signal drops to less than the V_{LIMIT} threshold. Only when the RESET pin is pulled low does the $\overline{ALERT}$ pin return to the default high level, thus indicating that the input signal is below the limit threshold. When the input signal drops to less than the limit threshold for the second time, the RESET pin is already pulled low. The device is set to transparent mode at this point, and the $\overline{ALERT}$ pin is pulled back high when the input signal drops below the alert threshold.

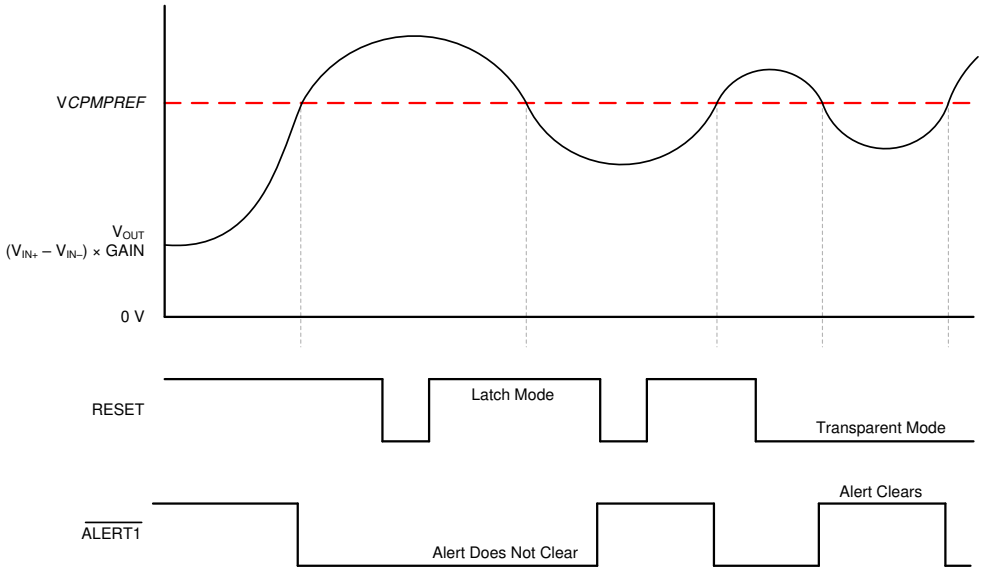

Figure 7-6. Transparent Mode vs. Latch Mode

Copyright © 2021 Texas Instruments Incorporated

8 Applications and Implementation

Note

Information in the following applications sections is not part of the TI component specification, and TI does not warrant its accuracy or completeness. TI's customers are responsible for determining suitability of components for their purposes, as well as validating and testing their design implementation to confirm system functionality.

8.1 Application Information

The INA381-Q1 is designed to enable easy configuration for detecting overcurrent conditions in an application. This device is individually targeted towards unidirectional overcurrent detection of a single threshold. However, this device can also be paired with additional devices and circuitry to create more complex monitoring functional blocks.

8.1.1 Select a Current-Sensing Resistor

The device measures the differential voltage developed across a resistor when current flows through the component to determine if the current being monitored exceeds a defined limit. This resistor is commonly referred to as a *current-sensing resistor* or a *current-shunt resistor*, with each term commonly used interchangeably. The flexible design of the device allows for measuring a wide differential input signal range across this current-sensing resistor.

Selecting the value of this current-sensing resistor is based primarily on two factors: the required accuracy of the current measurement and the allowable power dissipation across the current-sensing resistor. Larger voltages developed across this resistor allow for more accurate measurements to be made. Amplifiers have fixed internal errors that are largely dominated by the inherent input offset voltage. When the input signal decreases, these fixed internal amplifier errors become a larger portion of the measurement and increase the uncertainty in the measurement accuracy. When the input signal increases, the measurement uncertainty is reduced because the fixed errors are a smaller percentage of the signal being measured. Therefore, the use of larger-value, current-sensing resistors inherently improves measurement accuracy.

However, a system design trade-off must be evaluated through use of larger input signals for improving the measurement accuracy. Increasing the current-sense resistor value results in increased power dissipation across the current-sensing resistor. Increasing the value of the current-shunt resistor increases the differential voltage developed across the resistor when current passes through the component. This increase in voltage across the resistor increases the power that the resistor must be able to dissipate. Decreasing the value of the current-shunt resistor value reduces the power dissipation requirements of the resistor, but increases the measurement errors resulting from the decreased input signal. Selecting the optimal value for the shunt resistor requires factoring both the accuracy requirement for the specific application and the allowable power dissipation of this component.

An increasing number of very low ohmic-value resistors are becoming more widely available with values reaching down as low as 1 mΩ or lower with power dissipations of up to 5 W that enable large currents to be accurately monitored with sensing resistors.

Copyright © 2021 Texas Instruments Incorporated

8.1.1.1 Select a Current-Sensing Resistor: Example

In this example, the trade-offs involved in selecting a current-sensing resistor are discussed. This example requires 5% accuracy for detecting a 10-A overcurrent event under 20 µs where only 250 mW is allowable for the dissipation across the current-sensing resistor at the full-scale current level. Although the maximum power dissipation is defined as 250 mW, a lower dissipation is preferred to improve system efficiency. Given the total error budget of 5%, the INA381-Q1 total error is less than 1%. The INA381-Q1 is well suited for this application because up to 1% of error is available to be attributed to the measurement error of the device under these conditions.

As shown in Table 8-1, the maximum value calculated for the current-sensing resistor with these requirements is 2.5 mΩ. Although this value satisfies the maximum power dissipation requirement of 250 mW, headroom is available from the 2.5% maximum total overcurrent detection error to reduce the value of the current-sensing resistor and reduce the power dissipation further. Selecting a 1.5-mΩ, current-sensing resistor value offers a good tradeoff for reducing the power dissipation in this scenario by approximately 40% and still remaining within the accuracy region.

Table 8-1. Calculating the Current-Sensing Resistor (R_{SENSE})

PARAMETER		EQUATION	VALUE	UNIT
I_{MAX}	Maximum current		10	A
P_{D_MAX}	Maximum allowable power dissipation		250	mW
R_{SENSE_MAX}	Maximum allowable R_{SENSE}	P_{D_MAX} / I_{MAX}^{2}	2.5	mΩ
V_{OS}	Offset voltage, V_{CM} = 12 V		500	µV
V_{OS_ERROR}	Initial offset voltage error	$(V_{OS} / (R_{SENSE_MAX} \times I_{MAX}) \times 100$	2%	
E_G	Gain error		1%	
$ERROR_{TOTAL}$	Total measurement error	$\sqrt{(V_{OS_ERROR}^{2} + E_G^{2})}$	2.23%	
	Allowable current threshold accuracy		5%	
t_p	Total system overcurrent response time		10	µs
	Allowable overcurrent response		20	µs

Copyright © 2021 Texas Instruments Incorporated

8.1.2 Increase Comparator Hysteresis

The onboard comparator of the device is designed with a hysteresis of 50 mV. The INA381-Q1 is designed for the user to change the hysteresis from a preset value of 50 mV by connecting an external resistor between VOUT and CMPIN. Figure 8-1 shows a detailed block diagram of adding additional hysteresis.

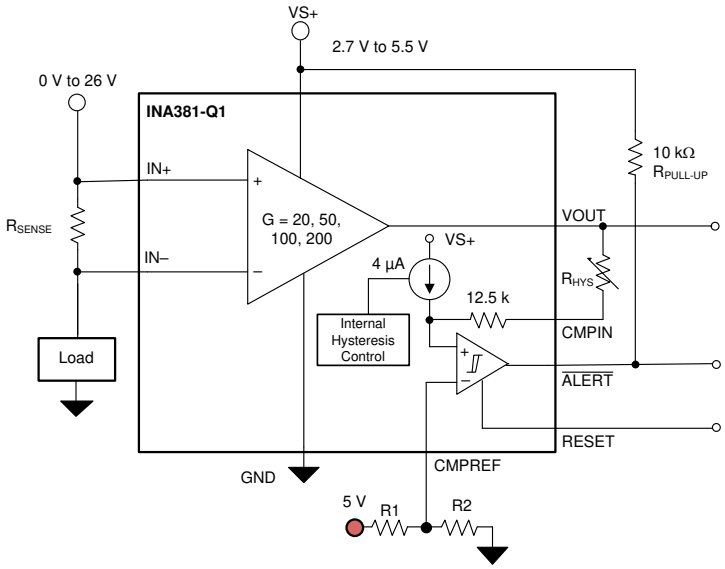

Figure 8-1. Increase Hysteresis to the Comparator

The default hysteresis is 50 mV. Internal to the comparator, the INA381-Q1 has a current source of 4 µA in series with 12.5 kΩ. The internal current source and hysteresis of the comparator is set by the internal hysteresis control circuit that is enabled only after $\overline{\text{ALERT}}$ is asserted low. $\overline{\text{ALERT}}$ is asserted low during an overcurrent condition when the voltage on VOUT exceeds the threshold set on the CMPREF pin. The internal 4-µA hysteresis circuits are triggered only after $\overline{\text{ALERT}}$ is asserted low.

To increase hysteresis to greater than the default 50 mV, the R_{HYS} resistor must be connected between the VOUT and CMPIN pins. Equation 1 describes the internal configuration to set the external hysteresis resistor.

$$R_{HYS} = \frac{V_{HYS} - (4\ \mu A \times 12500\ \Omega)}{4\ \mu A} \tag{1}$$

where

- V_{HYS} is the desired hysteresis voltage
- R_{HYS} is the external resistor on the input of the CMPIN pin

Table 8-2 lists the external resistors required at the input of the CMPIN pin to set the hysteresis.

Table 8-2. Hysteresis Resistor Selection

HYSTERESIS VOLTAGE	EXTERNAL RESISTOR AT THE CMPIN PIN
50 mV	0 Ω
75 mV	6.25 kΩ
100 mV	12.5 kΩ
125 mV	18.75 kΩ
150 mV	25 kΩ
200 mV	37.5 kΩ
250 mV	50 kΩ
300 mV	62.5 kΩ

Copyright © 2021 Texas Instruments Incorporated

8.1.3 Operation With Common-Mode Transients Greater Than 26 V

With a small amount of additional circuitry, the INA381-Q1 can be used in circuits subject to transients greater than 26 V. Use only Zener diodes or Zener-type transient absorbers (sometimes referred to as *transorbs*)—any other type of transient absorber has an unacceptable time delay. Start by adding a pair of resistors as shown in Figure 8-2 as a working impedance for the Zener diode. Keep these resistors as small as possible; most often approximately 10 Ω. Larger values can be used with an effect on gain that is discussed in the *Input Filtering* section. This circuit limits only short-term transients and, therefore, many applications are satisfied with a 10-Ω resistor along with conventional Zener diodes of the lowest acceptable power rating. This combination uses the least amount of board space. These diodes can be found in packages as small as SOT-523 or SOD-523.

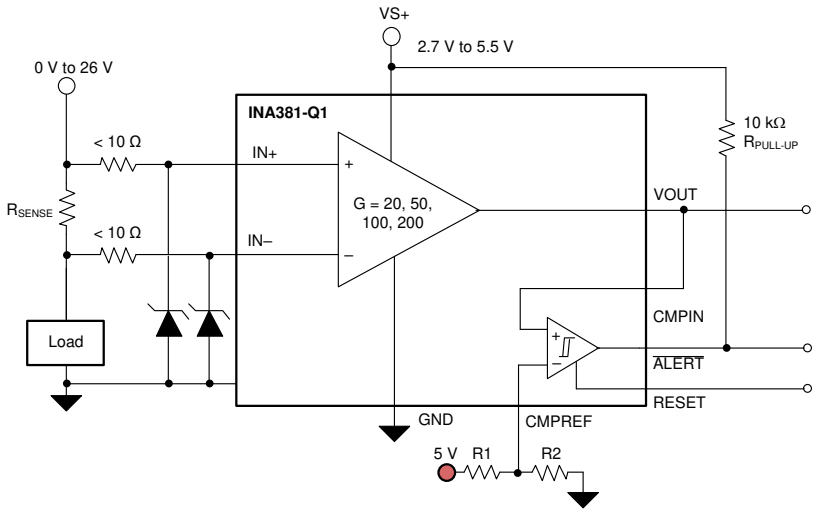

Figure 8-2. Transient Protection

In the event that low-power Zener diodes do not have sufficient transient absorption capability, use a higher-power transorb. Figure 8-2 shows that the most package-efficient solution involves using a single transorb and back-to-back diodes between the device inputs. The most space-efficient solutions are dual, series-connected diodes in a single SOT-523 or SOD-523 package. In either of the examples provided in Figure 8-2 and Figure 8-3, the total board area required by the INA381-Q1 with all protective components is less than that of an SOIC-8 package, and only slightly greater than that of a VSSOP-8 package.

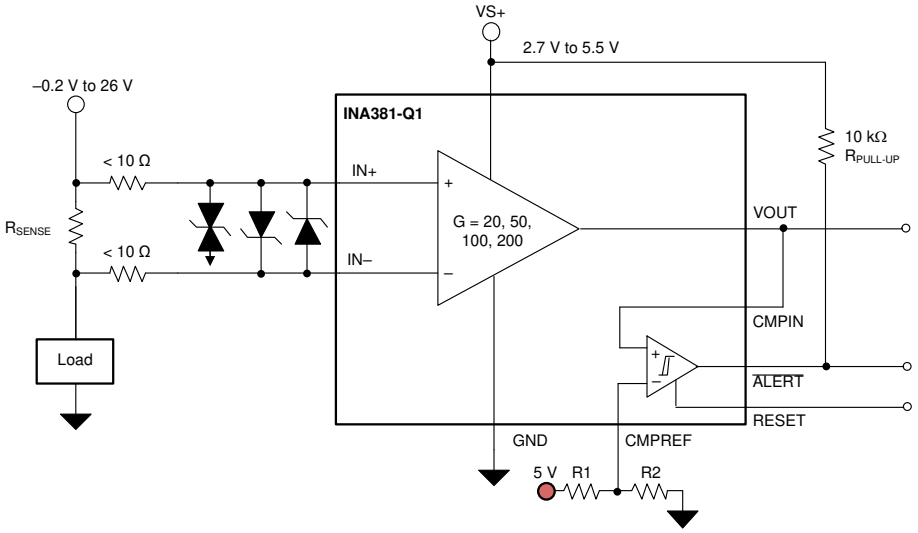

Figure 8-3. Transient Protection Using a Single Transorb and Input Clamps

Copyright © 2021 Texas Instruments Incorporated

8.1.4 Input Filtering

If the INA381-Q1 output is connected to a high-impedance input, the device output is the best location to filter, using a simple RC network from VOUT to GND. Filtering at the output attenuates high-frequency disturbances in the common-mode voltage, differential input signal, and INA381-Q1 power-supply voltage. If filtering at the output is not possible, or if only the differential input signal needs filtering, a filter can be applied at the input pins of the device.

External filtering helps reduce the amount of noise that reaches the comparator, and thereby reduces the likelihood of a false alert. The tradeoff to adding this noise filter is that the alert response time is increased because both the input signal and noise are filtered. Figure 8-4 shows the implementation of an input filter for the device.

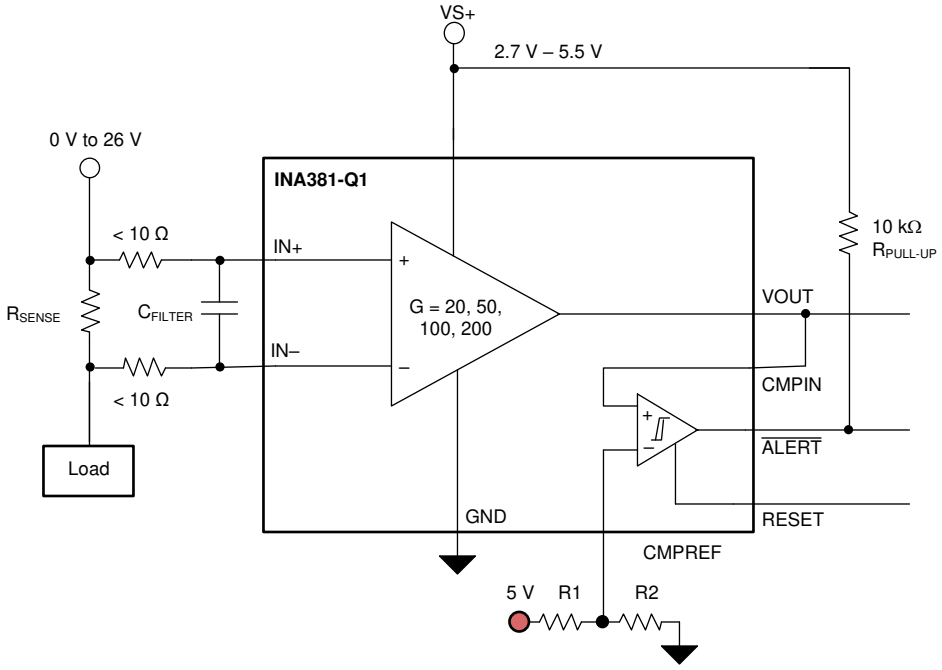

Figure 8-4. Input Filter

The addition of external series resistance creates an additional error in the measurement; therefore, the value of these series resistors must be kept to 10 Ω (or less, if possible) to reduce impact to accuracy. As shown in Figure 8-4, the internal bias network present at the input pins creates a mismatch in input bias currents when a differential voltage is applied between the input pins. If additional external series filter resistors are added to the circuit, the mismatch in bias currents results in a mismatch of voltage drops across the filter resistors. This mismatch creates a differential error voltage that subtracts from the voltage developed across the shunt resistor. This error results in a voltage at the device input pins that is different than the voltage developed across the shunt resistor. Without the additional series resistance, the mismatch in input bias currents has negligible effect on device operation. Equation 2 is used to calculate the gain error factor that is used with Equation 3 to calculate the percentage gain error when using external filter resistors.

Copyright © 2021 Texas Instruments Incorporated

Equation 2 shows that the amount of variance in the differential voltage present at the device input relative to the voltage developed at the shunt resistor is based both on the external series resistance (R_F) value as well as internal input resistor R_{INT}. The reduction of the shunt voltage reaching the device input pins appears as a gain error when comparing the output voltage relative to the voltage across the shunt resistor. Use Equation 2 to calculate the expected deviation from the shunt voltage to what is measured at the device input pins:

$$\text{Gain Error Factor} = \frac{1250 \times R_{INT}}{(1250 \times R_F) + (1250 \times R_{INT}) + (R_F \times R_{INT})} \quad (2)$$

where:

- R_{INT} is the internal input resistor
- R_F is the external series resistance

The adjustment factor from Equation 2 including the device internal input resistance shown in Table 8-3 varies with each gain version. Table 8-4 lists each individual device gain error factor.

Table 8-3. Input Resistance

PRODUCT	GAIN	R_{INT} (kΩ)
INA381A1-Q1	20	25
INA381A2-Q1	50	10
INA381A3-Q1	100	5
INA381A4-Q1	200	2.5

Table 8-4. Device Gain Error Factor

PRODUCT	SIMPLIFIED GAIN ERROR FACTOR
INA381A1-Q1	$\frac{25000}{(21 \times R_F) + 25000}$
INA381A2-Q1	$\frac{10000}{(9 \times R_F) + 10000}$
INA381A3-Q1	$\frac{1000}{R_F + 1000}$
INA381A4-Q1	$\frac{2500}{(3 \times R_F) + 2500}$

Use Equation 3 to then calculate the gain error that can be expected from the addition of the external series resistors:

$$\text{Gain Error (\%)} = 100 - (100 \times \text{Gain Error Factor}) \quad (3)$$

For example, using an INA381A2-Q1 and the corresponding gain error equation from Table 8-4, a series resistance of 10 Ω results in a gain error factor of 0.991. The corresponding gain error is then calculated using Equation 3, resulting in an additional gain error of approximately 0.89% solely because of the external 10-Ω series resistors.

Copyright © 2021 Texas Instruments Incorporated

8.2 Typical Applications

8.2.1 Bidirectional Window Comparator

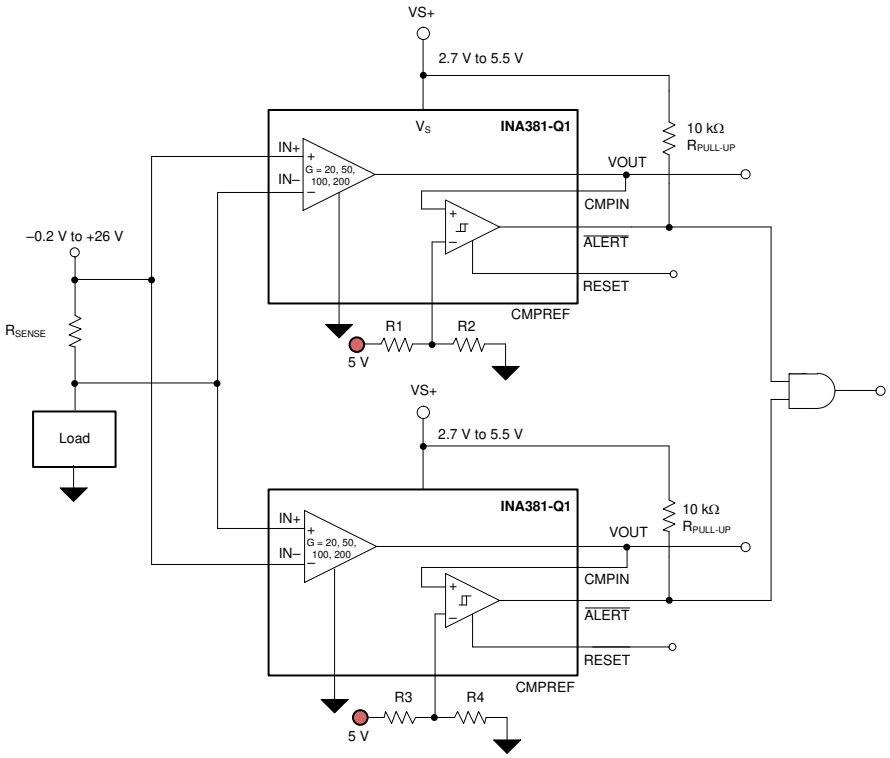

Figure 8-5. Bidirectional Window Comparator

8.2.1.1 Design Requirements

Table 8-5 lists the parameters for a design example of a high-side INA381-Q1 measuring in the forward direction, and one low-side INA381-Q1 measuring in the reverse direction. This example designs for maximum accuracy and also uses the alert function of both devices.

Table 8-5. Design Parameters

DESIGN PARAMETER	EXAMPLE VALUE
R_{SENSE}	12 mΩ
Power-supply voltage	5 V
Common-mode voltage	20 V
Maximum sense current	20 A
Small-signal bandwidth	> 120 kHz
Alert current threshold	19 A

Copyright © 2021 Texas Instruments Incorporated

8.2.1.2 Detailed Design Procedure

Although the device is only able to measure current through a current-sensing resistor flowing in one direction, a second INA381-Q1 can be used to create a bidirectional monitor. With the input pins of a second device reversed across the same current-sensing resistor, the second device is now able to detect current flowing in the other direction relative to the first device; see Figure 8-5. The outputs of each device connect to an AND gate to detect if either of the limit threshold levels are exceeded. As shown in Table 8-6, the output of the AND gate is high if neither overcurrent limit thresholds are exceeded. A low output state of the AND gate indicates that the positive overcurrent limit or the negative overcurrent limit has been exceeded.

Table 8-6. Bidirectional Overcurrent Output Status

OCP STATUS	OUTPUT
OCP+	0
OCP–	0
No OCP	1

In this scenario, the maximum current expected through the shunt resistor is 20 A in either the forward or reverse direction. Maximum accuracy is desired; therefore, the shunt resistor is maximized by taking the maximum output swing divided by the smallest gain and divided by the maximum current. The design parameters used in Table 8-5 yield a shunt value of 12.3 mΩ. The closest standard 1% and 0.1% device is 12 mΩ, and this value is used by both INA381-Q1 devices.

Because corrective action must be taken when the current exceeds ±19 A, the comparators require a value of 4.56 V (19 A × 0.012 Ω × 20 V/V). In this instance, a voltage divider consisting of two 4.53-kΩ resistors (R1 and R3) and two 5-kΩ resistors (R2 and R4) off the 5-V rail supply a voltage close to this value. To be certain that both device alert functions can trigger a single GPIO pin on a microcontroller, both comparator outputs feed into an AND gate.

8.2.1.3 Application Curve

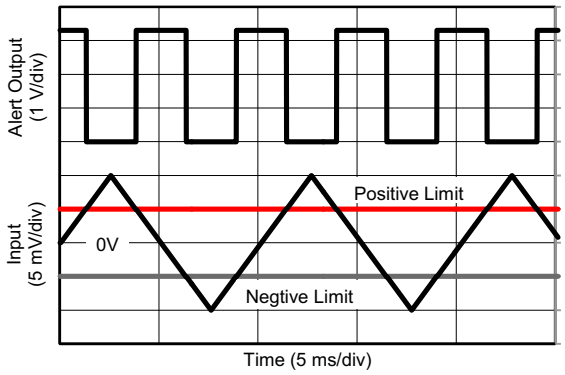

Figure 8-6. Bidirectional Operation

Copyright © 2021 Texas Instruments Incorporated

8.2.2 Solenoid Low-Side Current Sensing

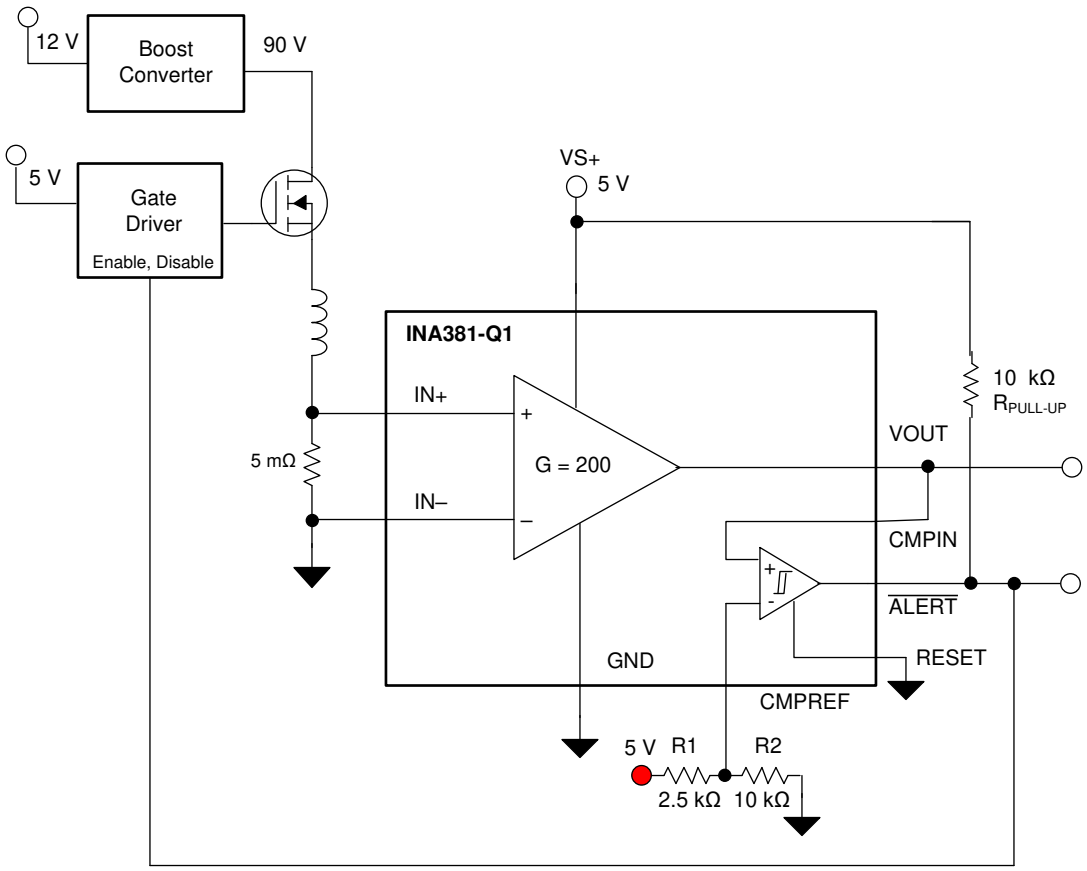

Figure 8-7. Solenoid Low-Side Current-Sensing

8.2.2.1 Design Requirements

Table 8-7 lists the parameters of an application design using the INA381-Q1 and $\overline{\text{ALERT}}$ functionality to create a low-side current-sense amplifier with less than a 20-µs system shutdown.

Table 8-7. Design Parameters

DESIGN PARAMETERS	EXAMPLE VALUE
Power-supply voltage	5 V
Low-side current sensing	V_{CM} = 0 V
Mode of operation	Unidirectional
Maximum current sense threshold	4.0 A
$\overline{\text{ALERT}}$ response time	< 20 µs
$\overline{\text{ALERT}}$ pin mode	Transparent
R_{SENSE} resistor	5 mΩ
Gain option	200 V/V

8.2.2.2 Detailed Design Procedure

The INA381-Q1 can measure current across a shunt resistor with common-mode voltage ranges from –0.3 V to +26 V. The INA381-Q1 is capable of measuring low-side current sensing allowing enough margin below ground to accurately measure current through the load. One common application for low-side current sensing is a solenoid control application. As described in Figure 8-7, a typical high-voltage solenoid application consists of a high-voltage NMOS transistor, a low-ohmic shunt resistor connected to the source of the NMOS transistor, and a solenoid. A solenoid is often used for applications that control a relay that triggers an on-off state. As

Copyright © 2021 Texas Instruments Incorporated

current flows through the solenoid, the current flowing through the copper windings generate a magnetic field around the iron that can be used to open or close a relay. Industrial valves, electromechanical relays, and PLC control relays are often built of solenoids, and the driver circuitry for solenoids are designed discretely, as shown in Figure 8-7.

A microcontroller unit is often used to control the duty cycle of the NMOS switch to control the position of the solenoid. By controlling the duty cycle of the solenoid driver, the current flowing through the solenoid can be controlled, which in turn can be used to perform position control. However, for applications that need two states, on and off, a microcontroller can be expensive and overkill. If a solenoid is located remotely in specific application, the routing of the current-sense amplifier signal back to the microcontroller can create additional overhead and often increase the cost of the application. The INA381-Q1 has a built-in comparator that can be programmed to assert an $\overline{\text{ALERT}}$ when the CMPIN signal exceeds the CMPREF threshold signal. The $\overline{\text{ALERT}}$ signal can be used to feed the $\overline{\text{ALERT}}$ signal back to the gate driver circuitry of the NMOS, which can disable the NMOS switch to turn the circuit off to protect from damage. Effective impedance of a solenoid is an inductor in series with a resistance. If the solenoid is prone to damage, the inductor can lose inductance and behave as a shorted resistor. If not protected, high current can flow through the solenoid and damage the system, causing permanent failure. The INA381-Q1, with an $\overline{\text{ALERT}}$ pin that responds in as fast as 10 µs, can be directly connected to the NMOS driver to remove power from the solenoid in the event of an overcurrent condition. When the load current decreases to less than the safe operating limit, the $\overline{\text{ALERT}}$ clears and enables safe operation of the solenoid. This design example can be used as a guideline to implement the INA381-Q1 for a solenoid application.

Based on Equation 4, the design example for the CMPREF voltage is 4 V. The threshold voltage is set using simple resistor dividers R1 and R2. R1 is set with 2.5 kΩ, and R2 is set with 10 kΩ. This 4-V threshold is set at the CMPREF pin. When the current exceeds 4 A, voltage on VOUT exceeds 4 V, and the $\overline{\text{ALERT}}$ pin asserts a low signal indicating a fault detection. The device is configured in transparent mode by connecting the RESET pin to ground. Because of this configuration, when the current signal falls below 4 A of current, the $\overline{\text{ALERT}}$ pin is pulled high and resets the fault detection, maintaining safe operation of the solenoid. This example explains a methodology where a solenoid can be self-protected and triggered based on a set, safe-operating, current threshold.

In this application, 4 A and higher are considered overcurrent conditions and some corrective action must be taken to prevent the current from destroying the system. The INA381-Q1 offers corrective action through an $\overline{\text{ALERT}}$ pin that can be tailored for a specific overcurrent condition through the CMPREF pin. To set the proper CMPREF value, a gain option and an R_{SENSE} value must first be determined. This design example uses a gain of 200 V/V and an R_{SENSE} value of 5 mΩ. CMPREF is calculated according to Equation 4 in this particular case. This value is calculated to be approximately 4 V. This value can be achieved through either a voltage divider or LDO. In this particular instance, the voltage divider was chosen.

$$\text{CMPREF (V)} = [\text{Alert Threshold (A)} \times \text{Shunt Resistor } (\Omega) + V_{OS}\text{ (V)}] \times \text{Gain} \quad (4)$$

Copyright © 2021 Texas Instruments Incorporated

8.2.2.3 Application Curve

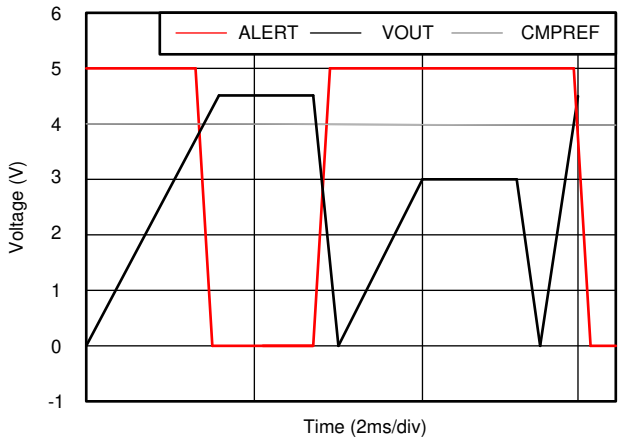

Figure 8-8. Low-Side Sensing Application Curve

9 Power Supply Recommendations

The device input circuitry accurately measures signals on common-mode voltages beyond the power-supply voltage, V_S. For example, the voltage applied to the VS+ power-supply pin can be 5 V, whereas the load power-supply voltage being monitored (V_{CM}) can be as high as 26 V. The device can withstand the full –0.2-V to +26-V range at the input pins, regardless of whether the device has power applied or not.

Power-supply bypass capacitors are required for stability and must be placed as closely as possible to the supply and ground pins of the device. A typical value for this supply bypass capacitor is 0.1 µF. Applications with noisy or high-impedance power supplies can require additional decoupling capacitors to reject power-supply noise.

Copyright © 2021 Texas Instruments Incorporated

10 Layout

10.1 Layout Guidelines

- Place the power-supply bypass capacitor as closely as possible to the supply and ground pins. The recommended value of this bypass capacitor is 0.1 µF. Add decoupling capacitance to compensate for noisy or high-impedance power supplies.
- Make sure that the thermal pad and GND are connected to a solid ground plane of the PCB.
- Pull up the open-drain output pin to the supply voltage rail through a 10-kΩ pullup resistor.

10.2 Layout Example

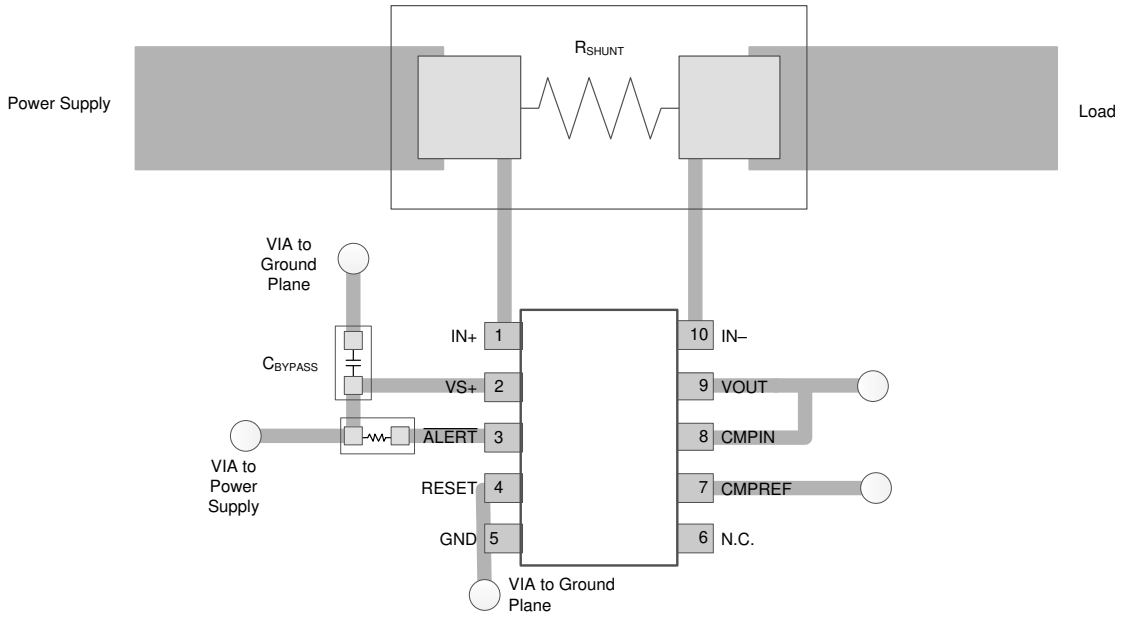

Figure 10-1. Recommended Layout for DGS Package

Copyright © 2021 Texas Instruments Incorporated

11 Device and Documentation Support

11.1 Documentation Support

11.1.1 Related Documentation

For related documentation see the following:

- Texas Instruments, *REF31xx 15-ppm/°C Maximum, 100-µA, SOT-23 Series Voltage Reference* data sheet
- Texas Instruments, *INA381EVM* user's guide

11.2 Receiving Notification of Documentation Updates

To receive notification of documentation updates, navigate to the device product folder on ti.com. Click on *Subscribe to updates* to register and receive a weekly digest of any product information that has changed. For change details, review the revision history included in any revised document.

11.3 Support Resources

TI E2E™ support forums are an engineer's go-to source for fast, verified answers and design help — straight from the experts. Search existing answers or ask your own question to get the quick design help you need.

Linked content is provided "AS IS" by the respective contributors. They do not constitute TI specifications and do not necessarily reflect TI's views; see TI's Terms of Use.

11.4 Trademarks

TI E2E™ is a trademark of Texas Instruments.
All trademarks are the property of their respective owners.

11.5 Electrostatic Discharge Caution



This integrated circuit can be damaged by ESD. Texas Instruments recommends that all integrated circuits be handled with appropriate precautions. Failure to observe proper handling and installation procedures can cause damage.

ESD damage can range from subtle performance degradation to complete device failure. Precision integrated circuits may be more susceptible to damage because very small parametric changes could cause the device not to meet its published specifications.

11.6 Glossary

TI Glossary This glossary lists and explains terms, acronyms, and definitions.

12 Mechanical, Packaging, and Orderable Information

The following pages include mechanical, packaging, and orderable information. This information is the most current data available for the designated devices. This data is subject to change without notice and revision of this document. For browser-based versions of this data sheet, refer to the left-hand navigation.

Copyright © 2021 Texas Instruments Incorporated

PACKAGING INFORMATION

Orderable part number	Status (1)	Material type (2)	Package | Pins	Package qty | Carrier	RoHS (3)	Lead finish/ Ball material (4)	MSL rating/ Peak reflow (5)	Op temp (°C)	Part marking (6)
INA381A1QDGSRQ1	Active	Production	VSSOP (DGS) | 10	2500 | LARGE T&R	Yes	NIPDAUAG	Level-2-260C-1 YEAR	-40 to 125	22O6
INA381A1QDGSRQ1.B	Active	Production	VSSOP (DGS) | 10	2500 | LARGE T&R	Yes	NIPDAUAG	Level-2-260C-1 YEAR	-40 to 125	22O6
INA381A2QDGSRQ1	Active	Production	VSSOP (DGS) | 10	2500 | LARGE T&R	Yes	NIPDAUAG	Level-2-260C-1 YEAR	-40 to 125	22P6
INA381A2QDGSRQ1.B	Active	Production	VSSOP (DGS) | 10	2500 | LARGE T&R	Yes	NIPDAUAG	Level-2-260C-1 YEAR	-40 to 125	22P6
INA381A3QDGSRQ1	Active	Production	VSSOP (DGS) | 10	2500 | LARGE T&R	Yes	NIPDAUAG	Level-2-260C-1 YEAR	-40 to 125	22Q6
INA381A3QDGSRQ1.B	Active	Production	VSSOP (DGS) | 10	2500 | LARGE T&R	Yes	NIPDAUAG	Level-2-260C-1 YEAR	-40 to 125	22Q6
INA381A4QDGSRQ1	Active	Production	VSSOP (DGS) | 10	2500 | LARGE T&R	Yes	NIPDAUAG	Level-2-260C-1 YEAR	-40 to 125	22R6
INA381A4QDGSRQ1.B	Active	Production	VSSOP (DGS) | 10	2500 | LARGE T&R	Yes	NIPDAUAG	Level-2-260C-1 YEAR	-40 to 125	22R6

(1) **Status:** For more details on status, see our product life cycle.

(2) **Material type:** When designated, preproduction parts are prototypes/experimental devices, and are not yet approved or released for full production. Testing and final process, including without limitation quality assurance, reliability performance testing, and/or process qualification, may not yet be complete, and this item is subject to further changes or possible discontinuation. If available for ordering, purchases will be subject to an additional waiver at checkout, and are intended for early internal evaluation purposes only. These items are sold without warranties of any kind.

(3) **RoHS values:** Yes, No, RoHS Exempt. See the TI RoHS Statement for additional information and value definition.

(4) **Lead finish/Ball material:** Parts may have multiple material finish options. Finish options are separated by a vertical ruled line. Lead finish/Ball material values may wrap to two lines if the finish value exceeds the maximum column width.

(5) **MSL rating/Peak reflow:** The moisture sensitivity level ratings and peak solder (reflow) temperatures. In the event that a part has multiple moisture sensitivity ratings, only the lowest level per JEDEC standards is shown. Refer to the shipping label for the actual reflow temperature that will be used to mount the part to the printed circuit board.

(6) **Part marking:** There may be an additional marking, which relates to the logo, the lot trace code information, or the environmental category of the part.

Multiple part markings will be inside parentheses. Only one part marking contained in parentheses and separated by a "~" will appear on a part. If a line is indented then it is a continuation of the previous line and the two combined represent the entire part marking for that device.

Important Information and Disclaimer: The information provided on this page represents TI's knowledge and belief as of the date that it is provided. TI bases its knowledge and belief on information provided by third parties, and makes no representation or warranty as to the accuracy of such information. Efforts are underway to better integrate information from third parties. TI has taken and continues to take reasonable steps to provide representative and accurate information but may not have conducted destructive testing or chemical analysis on incoming materials and chemicals. TI and TI suppliers consider certain information to be proprietary, and thus CAS numbers and other limited information may not be available for release.

In no event shall TI's liability arising out of such information exceed the total purchase price of the TI part(s) at issue in this document sold by TI to Customer on an annual basis.

OTHER QUALIFIED VERSIONS OF INA381-Q1 :

- Catalog : INA381

NOTE: Qualified Version Definitions:

- Catalog - TI's standard catalog product

TAPE AND REEL INFORMATION

REEL DIMENSIONS

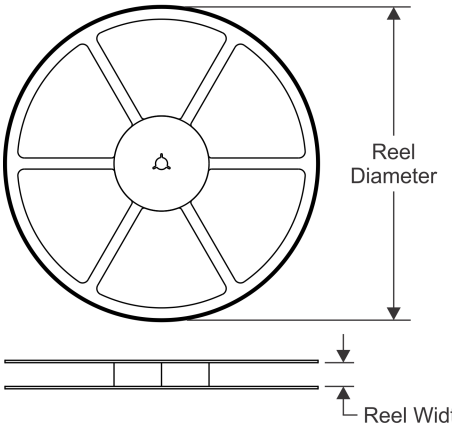

TAPE DIMENSIONS

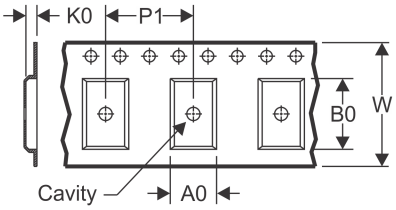

A0	Dimension designed to accommodate the component width
B0	Dimension designed to accommodate the component length
K0	Dimension designed to accommodate the component thickness
W	Overall width of the carrier tape
P1	Pitch between successive cavity centers

QUADRANT ASSIGNMENTS FOR PIN 1 ORIENTATION IN TAPE

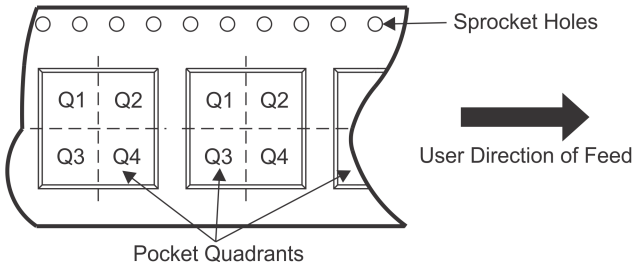

*All dimensions are nominal

Device	Package Type	Package Drawing	Pins	SPQ	Reel Diameter (mm)	Reel Width W1 (mm)	A0 (mm)	B0 (mm)	K0 (mm)	P1 (mm)	W (mm)	Pin1 Quadrant
INA381A1QDGSRQ1	VSSOP	DGS	10	2500	330.0	12.4	5.3	3.4	1.4	8.0	12.0	Q1
INA381A2QDGSRQ1	VSSOP	DGS	10	2500	330.0	12.4	5.3	3.4	1.4	8.0	12.0	Q1
INA381A3QDGSRQ1	VSSOP	DGS	10	2500	330.0	12.4	5.3	3.4	1.4	8.0	12.0	Q1
INA381A4QDGSRQ1	VSSOP	DGS	10	2500	330.0	12.4	5.3	3.4	1.4	8.0	12.0	Q1

TAPE AND REEL BOX DIMENSIONS

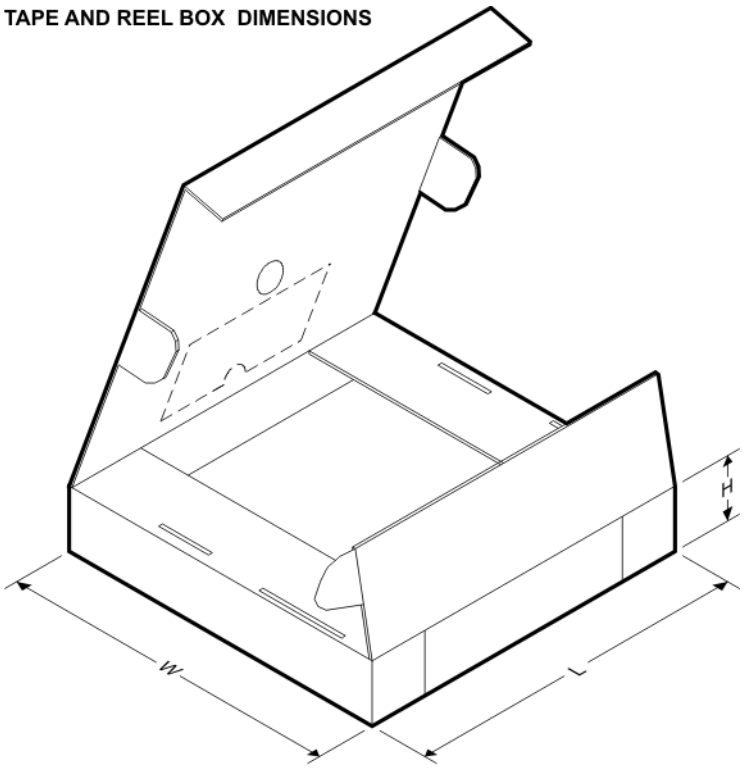

*All dimensions are nominal

Device	Package Type	Package Drawing	Pins	SPQ	Length (mm)	Width (mm)	Height (mm)
INA381A1QDGSRQ1	VSSOP	DGS	10	2500	366.0	364.0	50.0
INA381A2QDGSRQ1	VSSOP	DGS	10	2500	366.0	364.0	50.0
INA381A3QDGSRQ1	VSSOP	DGS	10	2500	366.0	364.0	50.0
INA381A4QDGSRQ1	VSSOP	DGS	10	2500	366.0	364.0	50.0

PACKAGE OUTLINE

DGS0010A

VSSOP - 1.1 mm max height

SMALL OUTLINE PACKAGE

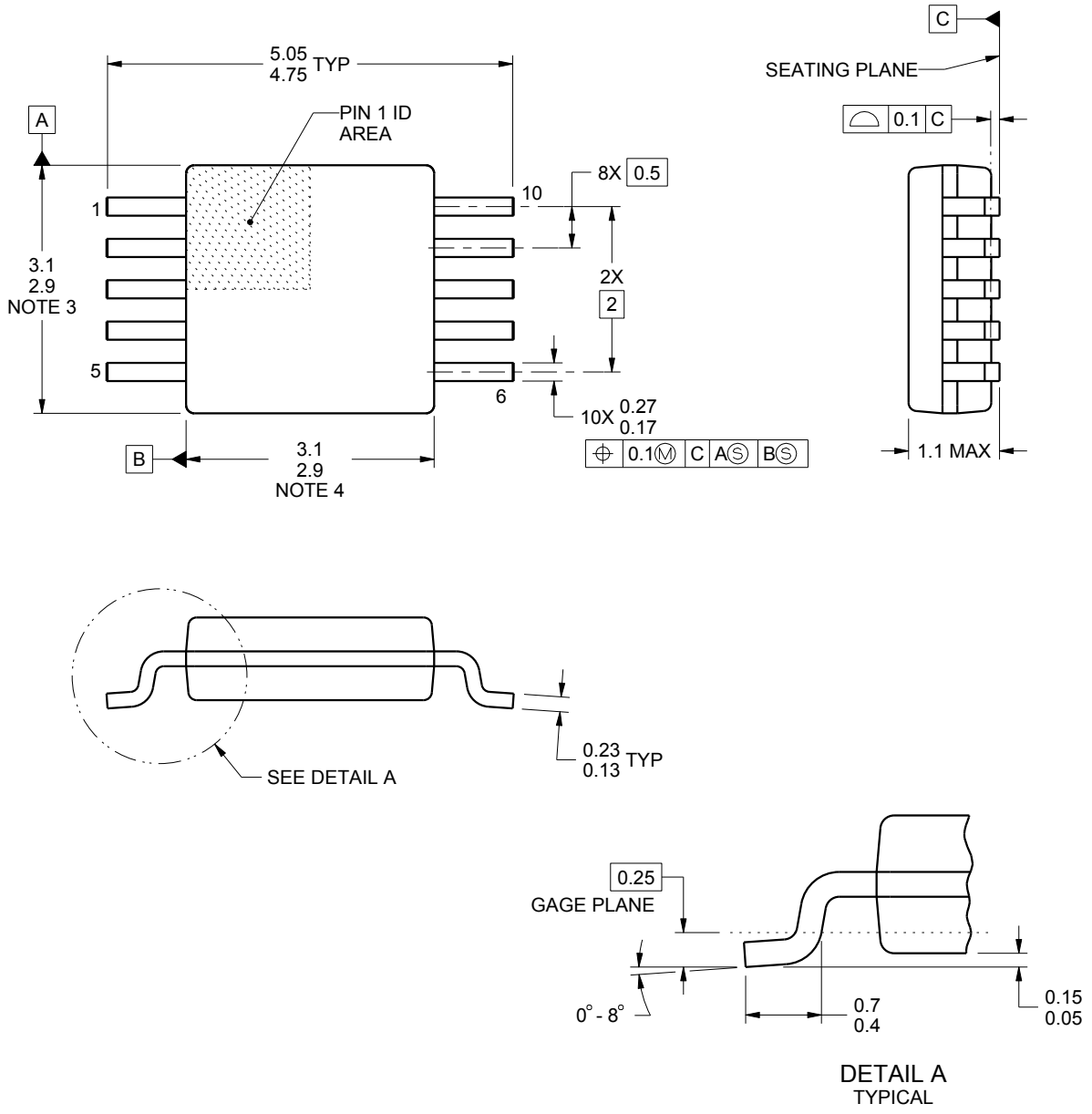

NOTES:

1. All linear dimensions are in millimeters. Any dimensions in parenthesis are for reference only. Dimensioning and tolerancing per ASME Y14.5M.
2. This drawing is subject to change without notice.
3. This dimension does not include mold flash, protrusions, or gate burrs. Mold flash, protrusions, or gate burrs shall not exceed 0.15 mm per side.
4. This dimension does not include interlead flash. Interlead flash shall not exceed 0.25 mm per side.
5. Reference JEDEC registration MO-187, variation BA.

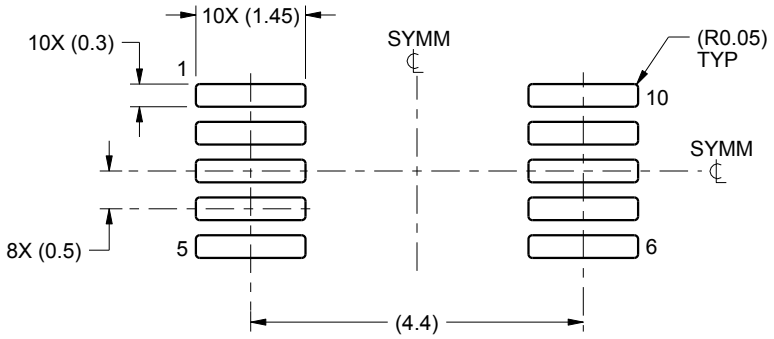

LAND PATTERN EXAMPLE
SCALE:10X

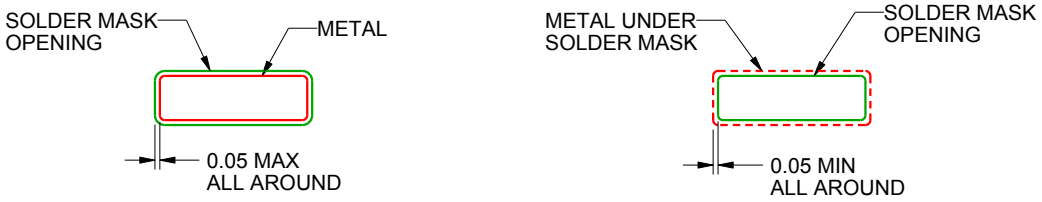

SOLDER MASK DETAILS
NOT TO SCALE

4221984/A 05/2015

NOTES: (continued)

6. Publication IPC-7351 may have alternate designs.
7. Solder mask tolerances between and around signal pads can vary based on board fabrication site.

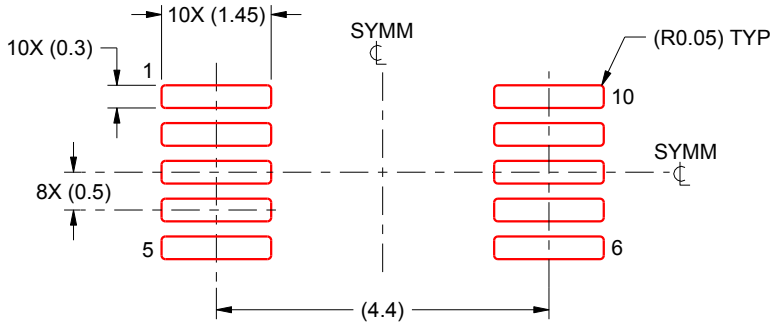

SOLDER PASTE EXAMPLE
BASED ON 0.125 mm THICK STENCIL
SCALE:10X

4221984/A 05/2015

NOTES: (continued)

8. Laser cutting apertures with trapezoidal walls and rounded corners may offer better paste release. IPC-7525 may have alternate design recommendations.
9. Board assembly site may have different recommendations for stencil design.

IMPORTANT NOTICE AND DISCLAIMER

TI PROVIDES TECHNICAL AND RELIABILITY DATA (INCLUDING DATASHEETS), DESIGN RESOURCES (INCLUDING REFERENCE DESIGNS), APPLICATION OR OTHER DESIGN ADVICE, WEB TOOLS, SAFETY INFORMATION, AND OTHER RESOURCES “AS IS” AND WITH ALL FAULTS, AND DISCLAIMS ALL WARRANTIES, EXPRESS AND IMPLIED, INCLUDING WITHOUT LIMITATION ANY IMPLIED WARRANTIES OF MERCHANTABILITY, FITNESS FOR A PARTICULAR PURPOSE OR NON-INFRINGEMENT OF THIRD PARTY INTELLECTUAL PROPERTY RIGHTS.

These resources are intended for skilled developers designing with TI products. You are solely responsible for (1) selecting the appropriate TI products for your application, (2) designing, validating and testing your application, and (3) ensuring your application meets applicable standards, and any other safety, security, regulatory or other requirements.

These resources are subject to change without notice. TI grants you permission to use these resources only for development of an application that uses the TI products described in the resource. Other reproduction and display of these resources is prohibited. No license is granted to any other TI intellectual property right or to any third party intellectual property right. TI disclaims responsibility for, and you fully indemnify TI and its representatives against any claims, damages, costs, losses, and liabilities arising out of your use of these resources.

TI’s products are provided subject to TI’s Terms of Sale, TI’s General Quality Guidelines, or other applicable terms available either on ti.com or provided in conjunction with such TI products. TI’s provision of these resources does not expand or otherwise alter TI’s applicable warranties or warranty disclaimers for TI products. Unless TI explicitly designates a product as custom or customer-specified, TI products are standard, catalog, general purpose devices.

TI objects to and rejects any additional or different terms you may propose.

Copyright © 2025, Texas Instruments Incorporated

Last updated 10/2025

ENTEGRECİ

Bu belge www.entegreci.com üzerinden sunulmaktadır.

Elektronik komponent tedarikinde Entegreci

Entegreci, Eskişehir merkezli, Türkiye geneline satış yapan bir elektronik komponent mağazasıdır. Entegreler (IC), mikrodenetleyiciler, transistörler, diyotlar, pasif elemanlar, konnektörler, modüller ve geliştirme kartları tek adetten seri üretim adetlerine kadar satılır. Ürün sayfalarında güncel stok durumunu, fiyatı ve datasheet bağlantısını bulabilirsiniz.

Parça koduyla arama

Üretici parça numarasını yazın; stok ve fiyatı hemen görün.

www.entegreci.com

Ürün kategorileri

Entegreden kapasitöre tüm elektronik komponent kategorileri.

Kategorilere göz atın

Üreticiler

Aradığınız üreticinin ürünlerini tek sayfada inceleyin.

Üreticileri görün

Toplu alım ve teklif

Listede olmayan ya da yüksek adetli parçalar için teklif isteyin.

Teklif isteyin

www.entegreci.com | **destek@entegreci.com** | **0850 305 90 34**

Entegreci is an online electronic components store based in Türkiye. Search by manufacturer part number to see stock, prices and datasheets for integrated circuits, microcontrollers, transistors, passive components and connectors, or request a quote for parts that are not listed.

Bu sayfa Entegreci tarafından eklenmiştir. Belgenin önceki sayfaları asıl yayıncısına aittir ve içeriği değiştirilmemiştir; en güncel sürüm için belgenin yayıncısına başvurun.