INA226-Q1 AEC-Q100, 36V, 16-Bit, Ultra-Precise, I²C Output Current, Voltage, and Power Monitor With Alert

1 Features

- AEC-Q100 qualified with the following results:
  - Device temperature grade 1: –40°C to 125°C
  - Device HBM ESD classification 2
  - Device CDM ESD classification C4B
- Functional Safety-Capable
  - Documentation available to aid functional safety system design
- Senses bus voltages from 0V to 36V
- High-side or low-side sensing
- Reports current, voltage, and power
- High accuracy:
  - Gain error: 0.1% (maximum)
  - Offset: 10µV (maximum)
- Configurable averaging options
- 16 programmable addresses
- Operates from 2.7V to 5.5V power supply
- 10-pin DGS (VSSOP) package

2 Applications

- ADAS domain controller
- Autonomous driving module
- Digital cockpit
- Telematics Control Unit
- Automotive head unit
- Body control module

3 Description

The INA226-Q1 is a current shunt and power monitor with an I2C™- or SMBUS-compatible interface. The device monitors both a shunt voltage drop and bus supply voltage. Programmable calibration value, conversion times, and averaging, combined with an internal multiplier, enable direct readouts of current in amperes and power in watts.

The INA226-Q1 senses current on common-mode bus voltages that can vary from 0V to 36V, independent of the supply voltage. The device operates from a single 2.7V to 5.5V supply, drawing a typical of 330µA of supply current. The device is specified over the operating temperature range between –40°C and 125°C and features up to 16 programmable addresses on the I²C-compatible interface.

Package Information

PART NUMBER	PACKAGE(1)	PACKAGE SIZE(2)
INA226-Q1	DGS (VSSOP, 10)	3.00mm × 4.90mm

(1) For all available packages, see the orderable addendum at the end of the data sheet.
(2) The package size (length × width) is a nominal value and includes pins, where applicable.

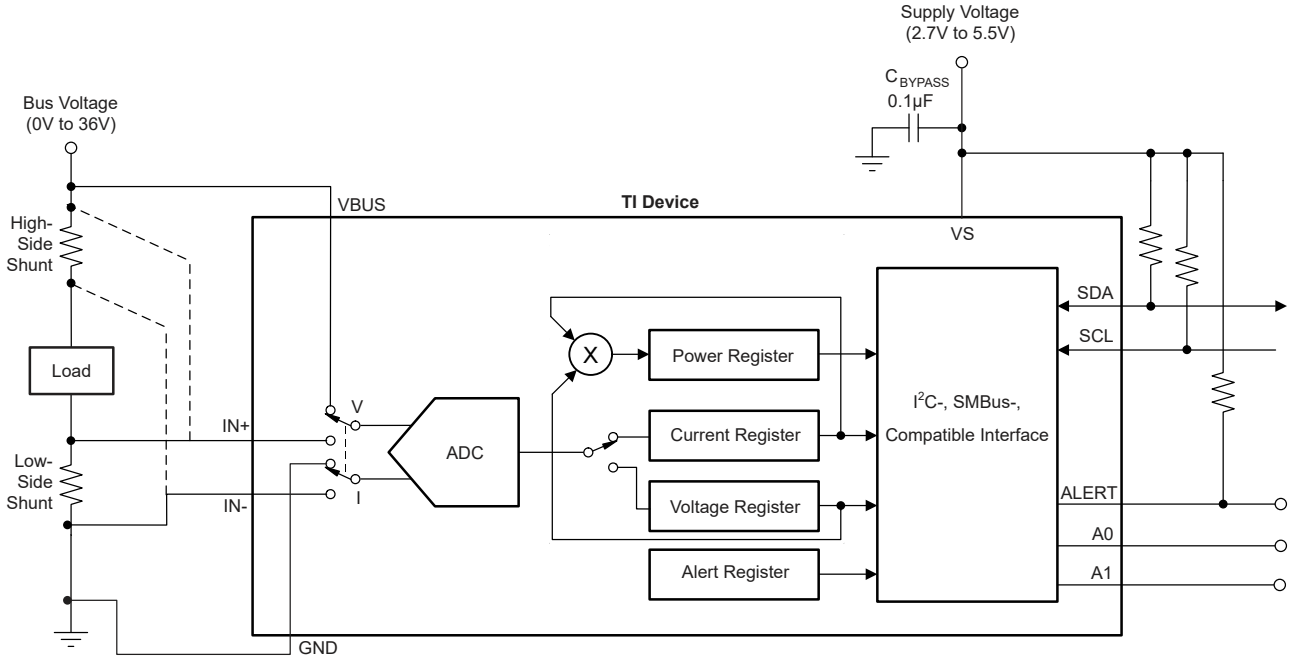

High-Side or Low-Side Sensing Application

An IMPORTANT NOTICE at the end of this data sheet addresses availability, warranty, changes, use in safety-critical applications, intellectual property matters and other important disclaimers. PRODUCTION DATA.

Table of Contents

1 Features....1
2 Applications....1
3 Description....1
4 Pin Configuration and Functions....3
5 Specifications....4
5.1 Absolute Maximum Ratings....4
5.2 ESD Ratings....4
5.3 Recommended Operating Conditions....4
5.4 Thermal Information....4
5.5 Electrical Characteristics....5
5.6 Typical Characteristics....7
6 Detailed Description....10
6.1 Overview....10
6.2 Functional Block Diagram....10
6.3 Feature Description....10
6.4 Device Functional Modes....13
6.5 Programming....15
7 Registers....22
7.1 Register Maps....22
8 Application and Implementation....29
8.1 Application Information....29
8.2 Typical Applications....29
8.3 Power Supply Recommendations....31
8.4 Layout....31
9 Device and Documentation Support....32
9.1 Device Support....32
9.2 Receiving Notification of Documentation Updates....32
9.3 Support Resources....32
9.4 Trademarks....32
9.5 Electrostatic Discharge Caution....32
9.6 Glossary....32
10 Revision History....32
11 Mechanical, Packaging, and Orderable Information....33

Copyright © 2026 Texas Instruments Incorporated

4 Pin Configuration and Functions

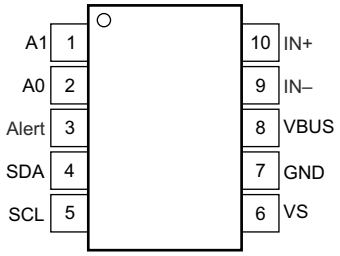

Figure 4-1. DGS Package 10-Pin VSSOP Top View

Table 4-1. Pin Functions

PIN		Type	DESCRIPTION
NAME	NO.		
A0	2	Digital input	Address pin. Connect to GND, SCL, SDA, or VS. Table 6-2 shows pin settings and corresponding addresses.
A1	1	Digital input	Address pin. Connect to GND, SCL, SDA, or VS. Table 6-2 shows pin settings and corresponding addresses.
Alert	3	Digital output	Multi-functional alert, open-drain output.
GND	7	Analog	Ground.
IN+	10	Analog input	Connect to supply side of shunt resistor.
IN–	9	Analog input	Connect to load side of shunt resistor.
SCL	5	Digital input	Serial bus clock line, open-drain input.
SDA	4	Digital I/O	Serial bus data line, open-drain input/output.
VBUS	8	Analog input	Bus voltage input.
VS	6	Analog	Power supply, 2.7V to 5.5V.

Copyright © 2026 Texas Instruments Incorporated

5 Specifications

5.1 Absolute Maximum Ratings

over operating free-air temperature range (unless otherwise noted) (1)

		MIN	MAX	UNIT
V_{VS}	Supply voltage		6	V
Analog Inputs, IN+, IN–	Differential (V_{IN+} – V_{IN-})(2)	–40	40	V
	Common-Mode (V_{IN+} + V_{IN-}) / 2	–0.3	40	
V_{VBUS}		–0.3	40	V
V_{SDA}		GND – 0.3	6	V
V_{SCL}		GND – 0.3	V_{VS} + 0.3	V
I_{IN}	Input current into any pin		5	mA
I_{OUT}	Open-drain digital output current		10	mA
T_J	Junction temperature		150	°C
T_{stg}	Storage temperature range	–65	150	°C

(1) Operation outside the *Absolute Maximum Ratings* may cause permanent device damage. *Absolute Maximum Ratings* do not imply functional operation of the device at these or any other conditions beyond those listed under *Recommended Operating Conditions*. If used outside the *Recommended Operating Conditions* but within the *Absolute Maximum Ratings*, the device may not be fully functional, and this may affect device reliability, functionality, performance, and shorten the device lifetime.
(2) IN+ and IN– can have a differential voltage between –40 V and 40 V. However, the voltage at these pins must not exceed the range –0.3 V to 40 V.

5.2 ESD Ratings

			VALUE	UNIT
$V_{(ESD)}$	Electrostatic discharge	Human body model (HBM), per AEC Q100-002(1) HBM ESD classification level 2	±2000	V
		Charged device model (CDM), per AEC Q100-011 CDM ESD classification level C6	±750	

(1) AEC Q100-002 indicates that HBM stressing shall be in accordance with the ANSI/ESDA/JEDEC JS-001 specification.

5.3 Recommended Operating Conditions

over operating free-air temperature range (unless otherwise noted)

		MIN	NOM	MAX	UNIT
V_{CM}	Common-mode input voltage		12		V
V_{VS}	Operating supply voltage		3.3		V
T_A	Operating free-air temperature	–40		125	°C

5.4 Thermal Information

THERMAL METRIC(1)		INA226-Q1 DGS (VSSOP) 10 PINS	UNIT
$R_{\theta JA}$	Junction-to-ambient thermal resistance	144.6	°C/W
$R_{\theta JC(top)}$	Junction-to-case (top) thermal resistance	53.3	°C/W
$R_{\theta JB}$	Junction-to-board thermal resistance	80.4	°C/W
Ψ_{JT}	Junction-to-top characterization parameter	3.5	°C/W
Y_{JB}	Junction-to-board characterization parameter	78.9	°C/W
$R_{\theta JC(bot)}$	Junction-to-case (bottom) thermal resistance	N/A	°C/W

(1) For more information about traditional and new thermal metrics, see the Semiconductor and IC Package Thermal Metrics application note.

Copyright © 2026 Texas Instruments Incorporated

5.5 Electrical Characteristics

T_A = 25°C, V_{VS} = 3.3 V, V_{IN+} = 12 V, V_{SENSE} = (V_{IN+} – $V_{IN–}$) = 0 mV and V_{VBUS} = 12 V, unless otherwise noted

PARAMETER		TEST CONDITIONS	MIN	TYP	MAX	UNIT
INPUT						
	Shunt voltage input range		–81.9175		81.92	mV
	Bus voltage input range[1]		0		36	V
CMRR	Common-mode rejection	0 V ≤ V_{IN+} ≤ 36 V	126	140		dB
V_{OS}	Shunt offset voltage, RTI[2]			±2.5	±10	µV
	Shunt offset voltage, RTI[2] vs temperature	–40°C ≤ T_A ≤ 125°C		0.02	0.1	µV/°C
PSRR	Shunt offset voltage, RTI[2] vs Power supply	2.7 V ≤ VS ≤ 5.5 V		±2.5		µV/V
V_{OS}	Bus offset voltage, RTI[2]			±1.25	±7.5	mV
	Bus offset voltage, RTI[2] vs temperature	–40°C ≤ T_A ≤ 125°C		10	40	µV/°C
PSRR	Bus offset voltage, RTI[2] vs power supply			±0.5		mV/V
I_B	Input bias current (I_{IN+}, $I_{IN–}$ pins)			0.1		nA
	VBUS input impedance			830		kΩ
	Input leakage [3]	(IN+ pin) + (IN– pin), Power-down mode		0.1	0.5	µA
DC ACCURACY						
	ADC native resolution			16		Bits
	1 LSB step size	Shunt voltage		2.5		µV
		Bus voltage		1.25		mV
	Shunt voltage gain error			0.02%	0.1%	
	Shunt voltage gain error vs temperature	–40°C ≤ T_A ≤ 125°C		10	50	ppm/°C
	Bus voltage gain error			0.02%	0.1%	
	Bus voltage gain error vs temperature	–40°C ≤ T_A ≤ 125°C		10	50	ppm/°C
	Differential nonlinearity			±0.1		LSB
t_{CT}	ADC conversion time	CT bit = 000		140	154	µs
		CT bit = 001		204	224	
		CT bit = 010		332	365	
		CT bit = 011		588	646	
		CT bit = 100		1.1	1.21	ms
		CT bit = 101		2.116	2.328	
		CT bit = 110		4.156	4.572	
		CT bit = 111		8.244	9.068	
SMBus						
	SMBus timeout[4]			28	35	ms
DIGITAL INPUT/OUTPUT						
	Input capacitance			3		pF
	Leakage input current	0 V ≤ V_{SCL} ≤ V_{VS} , 0 V ≤ V_{SDA} ≤ V_{VS}, 0 V ≤ V_{Alert} ≤ V_{VS} , 0 V ≤ V_{A0} ≤ V_{VS} , 0 V ≤ V_{A1} ≤ V_{VS}		0.1	1	µA
V_{IH}	High-level input voltage		0.7×V_{VS}		6	V
V_{IL}	Low-level input voltage		–0.5		0.3×V_{VS}	V
V_{OL}	Low-level output voltage, SDA, Alert	I_{OL} = 3 mA	0		0.4	V
	Hysteresis			500		mV
POWER SUPPLY						
	Operating supply range		2.7		5.5	V
I_Q	Quiescent current			330	420	µA
	Quiescent current, power-down (shutdown) mode			0.5	2	µA

Copyright © 2026 Texas Instruments Incorporated

T_A = 25°C, V_{VS} = 3.3 V, V_{IN+} = 12 V, V_{SENSE} = (V_{IN+} – $V_{IN–}$) = 0 mV and V_{VBUS} = 12 V, unless otherwise noted

PARAMETER		TEST CONDITIONS	MIN	TYP	MAX	UNIT
V_{POR}	Power-on reset threshold			2		V

(1) While the input range is 36 V, the full-scale range of the ADC scaling is 40.96 V. See the Section 6.3.1. Do not apply more than 36 V.
(2) RTI = Referred-to-input.
(3) Input leakage is positive (current flowing into the pin) for the conditions shown at the top of this table. Negative leakage currents can occur under different input conditions.
(4) SMBus timeout in the device resets the interface any time SCL is low for more than 28 ms.

Copyright © 2026 Texas Instruments Incorporated

5.6 Typical Characteristics

At T_A = 25°C, V_{VS} = 3.3V, V_{IN+} = 12V, V_{SENSE} = (V_{IN+} – $V_{IN–}$) = 0mV and V_{VBUS} = 12V, unless otherwise noted.

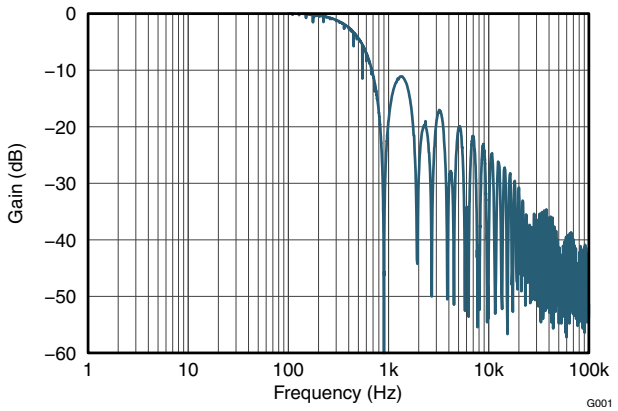

Figure 5-1. Frequency Response

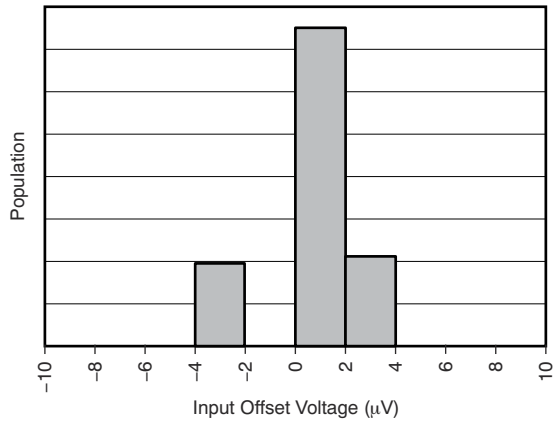

Figure 5-2. Shunt Input Offset Voltage Production Distribution

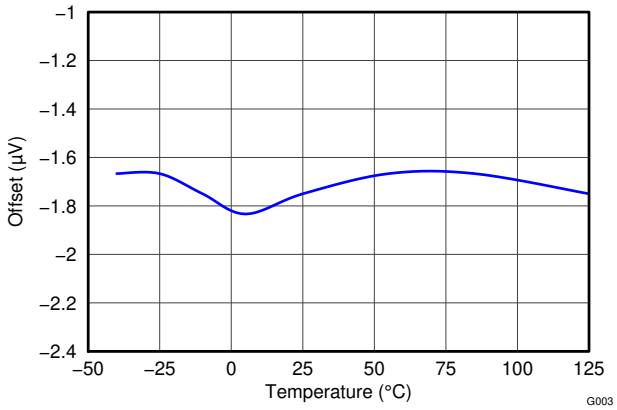

Figure 5-3. Shunt Input Offset Voltage vs Temperature

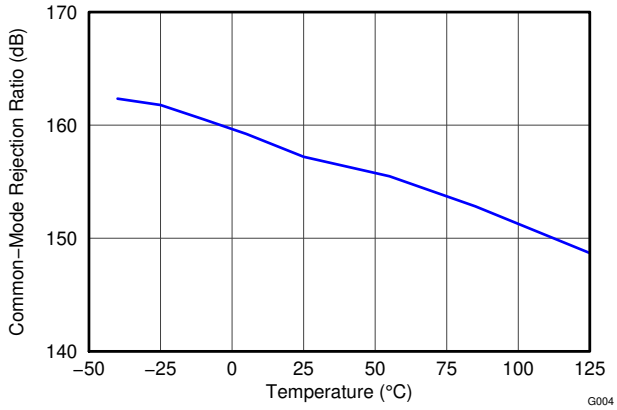

Figure 5-4. Shunt Input Common-Mode Rejection Ratio vs Temperature

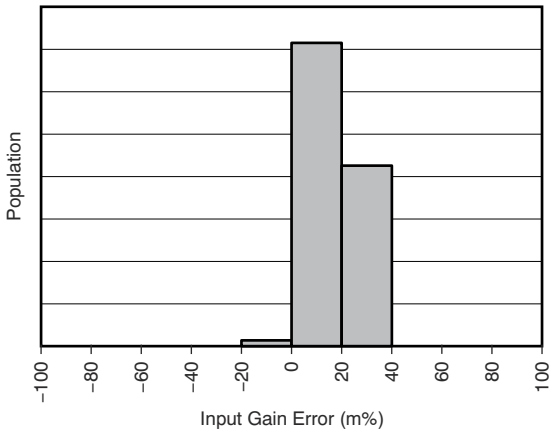

Figure 5-5. Shunt Input Gain Error Production Distribution

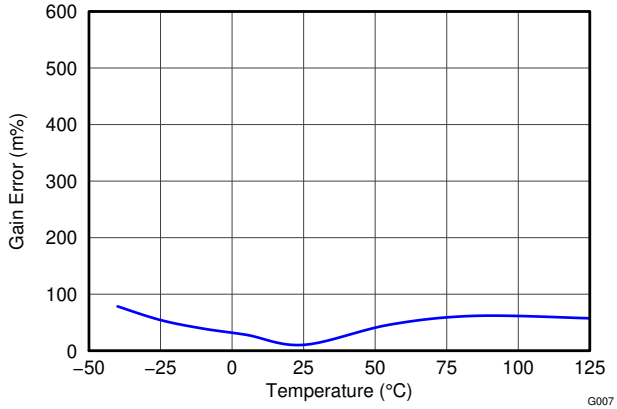

Figure 5-6. Shunt Input Gain Error vs Temperature

Copyright © 2026 Texas Instruments Incorporated

5.6 Typical Characteristics (continued)

At T_A = 25°C, V_{VS} = 3.3V, V_{IN+} = 12V, V_{SENSE} = (V_{IN+} – $V_{IN–}$) = 0mV and V_{VBUS} = 12V, unless otherwise noted.

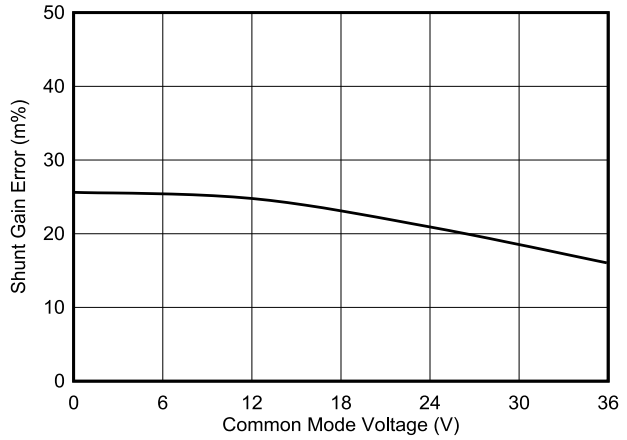

Figure 5-7. Shunt Input Gain Error vs Common-Mode Voltage

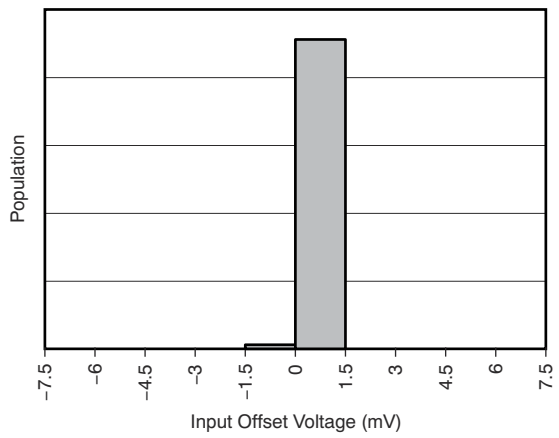

Figure 5-8. Bus Input Offset Voltage Production Distribution

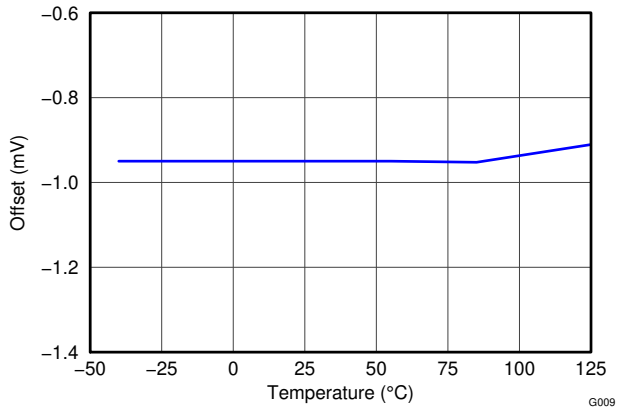

Figure 5-9. Bus Input Offset Voltage vs Temperature

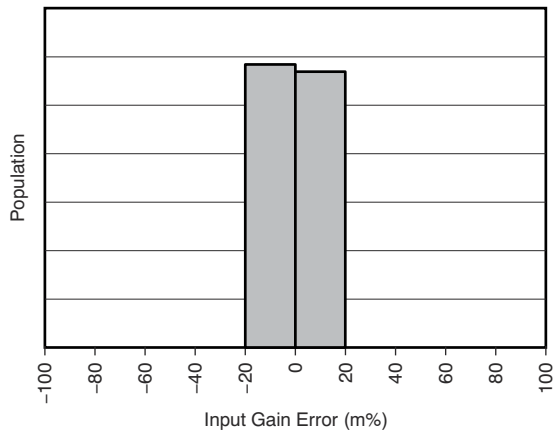

Figure 5-10. Bus Input Gain Error Production Distribution

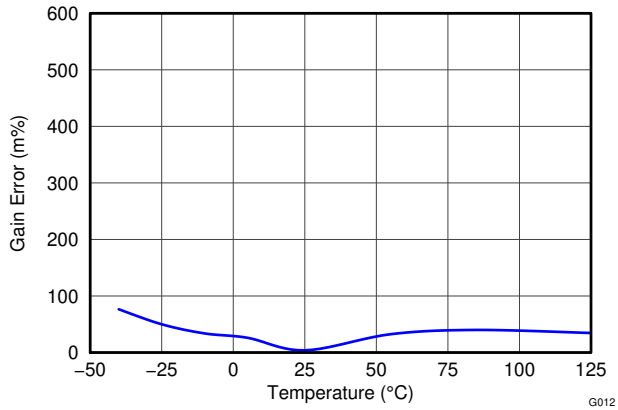

Figure 5-11. Bus Input Gain Error vs Temperature

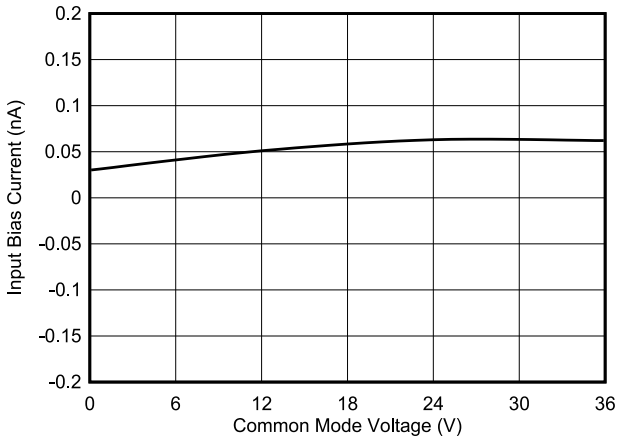

Figure 5-12. Input Bias Current vs Common-Mode Voltage

Copyright © 2026 Texas Instruments Incorporated

5.6 Typical Characteristics (continued)

At T_A = 25°C, V_{VS} = 3.3V, V_{IN+} = 12V, V_{SENSE} = (V_{IN+} – $V_{IN–}$) = 0mV and V_{VBUS} = 12V, unless otherwise noted.

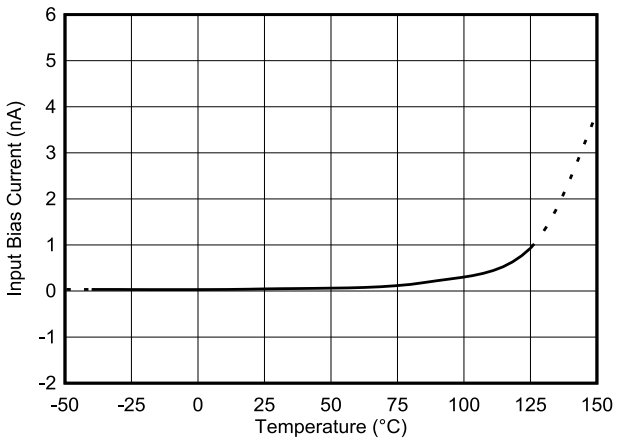

Figure 5-13. Input Bias Current vs Temperature

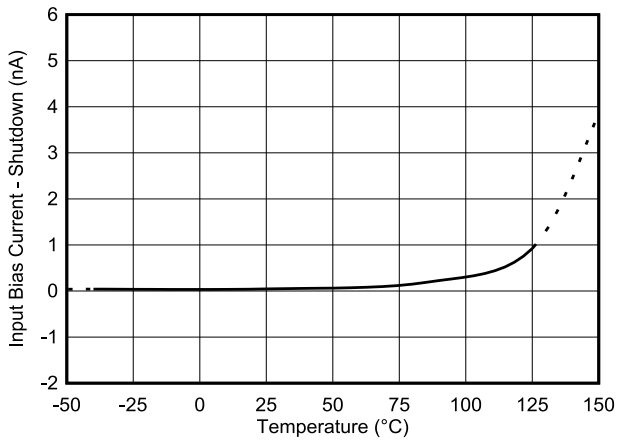

Figure 5-14. Input Bias Current vs Temperature, Shutdown

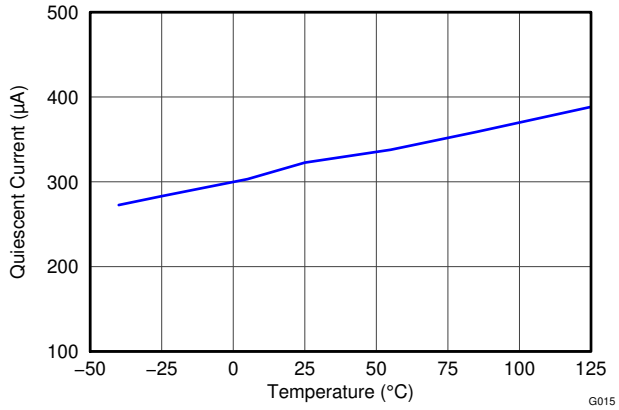

Figure 5-15. Active I_Q vs Temperature

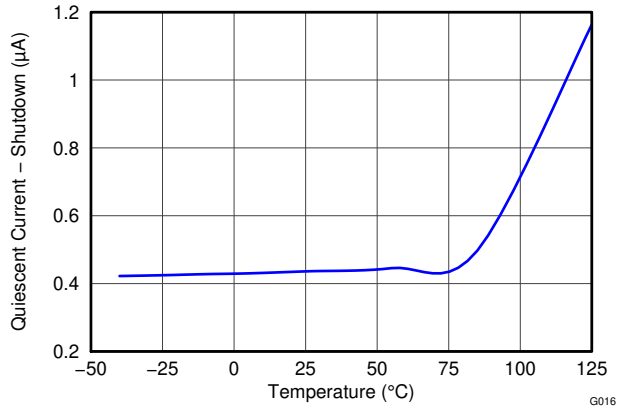

Figure 5-16. Shutdown I_Q vs Temperature

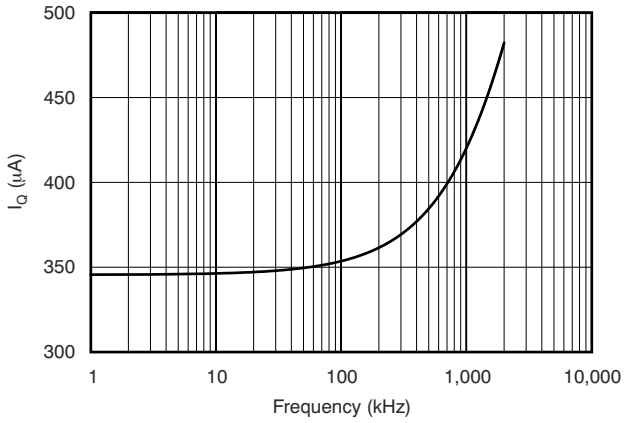

Figure 5-17. Active I_Q vs I^2C Clock Frequency

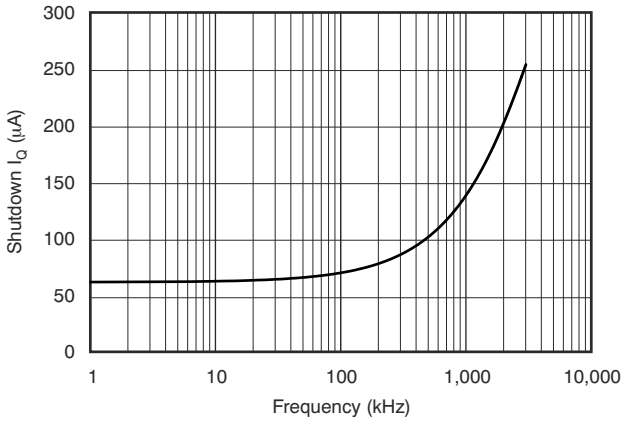

Figure 5-18. Shutdown I_Q vs I^2C Clock Frequency

Copyright © 2026 Texas Instruments Incorporated

6 Detailed Description

6.1 Overview

The INA226-Q1 is a digital current sense amplifier with an I^{2}C- and SMBus-compatible interface. The device provides digital current, voltage, and power readings necessary for accurate decision-making in precisely-controlled systems. Programmable registers allow flexible configuration for measurement resolution as well as continuous-versus-triggered operation. Detailed register information appears at the end of this data sheet. See the *Functional Block Diagram* section for a block diagram of the INA226-Q1 device.

6.2 Functional Block Diagram

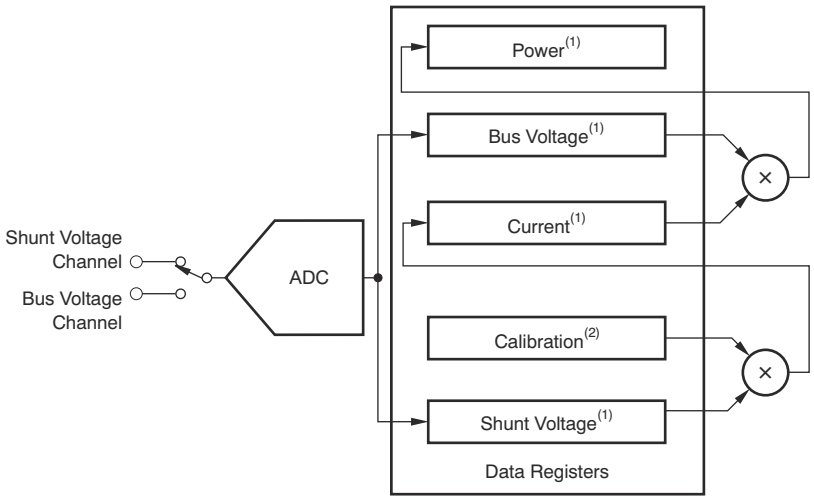

(1) Read-only
(2) Read/write

6.3 Feature Description

6.3.1 Basic ADC Functions

The INA226-Q1 device performs two measurements on the power-supply bus of interest. The voltage developed from the load current that flows through a shunt resistor creates a shunt voltage that is measured at the IN+ and IN– pins. The device can also measure the power supply bus voltage by connecting this voltage to the VBUS pin. The differential shunt voltage is measured with respect to the IN– pin while the bus voltage is measured with respect to ground.

The device is typically powered by a separate supply that can range from 2.7V to 5.5V. The bus that is being monitored can range in voltage from 0V to 36V. Based on the fixed 1.25mV LSB for the Bus Voltage Register that a full-scale register results in a 40.96V value.

Note

Do not apply more than 36V of actual voltage to the input pins.

There are no special considerations for power-supply sequencing because the common-mode input range and power-supply voltage are independent of each other; therefore, the bus voltage can be present with the supply voltage off, and reciprocally.

The device takes two measurements, shunt voltage and bus voltage. The device then converts these measurements to current, based on the Calibration Register value, and then calculates power. Refer to the *Programming the Calibration Register* section for additional information on programming the Calibration Register.

Copyright © 2026 Texas Instruments Incorporated

The device has two operating modes, continuous and triggered, that determine how the ADC operates following these conversions. When the device is in the normal operating mode (that is, MODE bits of the Configuration Register (00h) are set to '111'), the device continuously converts a shunt voltage reading followed by a bus voltage reading. After the shunt voltage reading, the current value is calculated (based on Equation 3). This current value is then used to calculate the power result (using Equation 4). These values are subsequently stored in an accumulator, and the measurement/calculation sequence repeats until the number of averages set in the Configuration Register (00h) is reached. Following every sequence, the present set of values measured and calculated are appended to previously collected values. After all of the averaging has been completed, the final values for shunt voltage, bus voltage, current, and power are updated in the corresponding registers that can then be read. These values remain in the data output registers until the values are replaced by the next fully completed conversion results. Reading the data output registers does not affect a conversion in progress.

The mode control in the Conversion Register (00h) also permits selecting modes to convert only the shunt voltage or the bus voltage to further allow the user to configure the monitoring function to fit the specific application requirements.

All current and power calculations are performed in the background and do not contribute to conversion time.

In triggered mode, writing any of the triggered convert modes into the Configuration Register (00h) (that is, MODE bits of the Configuration Register (00h) are set to ‘001’, ‘010’, or ‘011’) triggers a single-shot conversion. This action produces a single set of measurements; thus, to trigger another single-shot conversion, the Configuration Register (00h) must be written to a second time, even if the mode does not change.

In addition to the two operating modes (continuous and triggered), the device also has a power-down mode that reduces the quiescent current and turns off current into the device inputs, reducing the impact of supply drain when the device is not being used. Full recovery from power-down mode requires 40µs. The registers of the device can be written to and read from while the device is in power-down mode. The device remains in power-down mode until one of the active modes settings are written into the Configuration Register (00h).

Although the device can be read at any time, and the data from the last conversion remain available, the Conversion Ready flag bit (Mask/Enable Register, CVRF bit) is provided to help coordinate one-shot or triggered conversions. The Conversion Ready flag (CVRF) bit is set after all conversions, averaging, and multiplication operations are complete.

The Conversion Ready flag (CVRF) bit clears under these conditions:

- Writing to the Configuration Register (00h), except when configuring the MODE bits for power-down mode; or
- Reading the Mask/Enable Register (06h)

6.3.1.1 Power Calculation

The Current and Power are calculated following shunt voltage and bus voltage measurements as shown in Figure 6-1. Current is calculated following a shunt voltage measurement based on the value set in the Calibration Register. If there is no value loaded into the Calibration Register, the current value stored is zero. Power is calculated following the bus voltage measurement based on the previous current calculation and bus voltage measurement. If there is no value loaded in the Calibration Register, the power value stored is also zero. Again, these calculations are performed in the background and do not add to the overall conversion time. These current and power values are considered intermediate results (unless the averaging is set to 1) and are stored in an internal accumulation register, not the corresponding output registers. Following every measured sample, the newly-calculated values for current and power are appended to this accumulation register until all of the samples have been measured and averaged based on the number of averages set in the Configuration Register (00h).

Copyright © 2026 Texas Instruments Incorporated

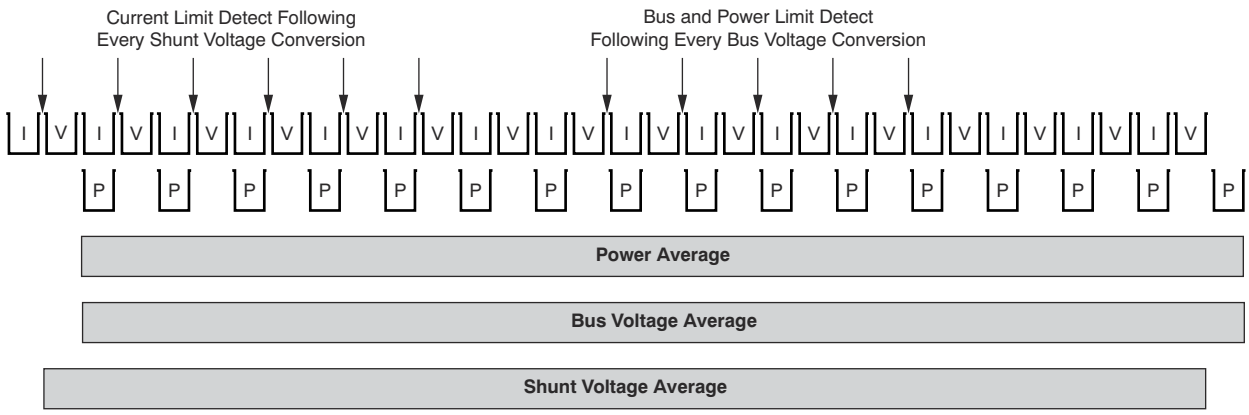

Figure 6-1. Power Calculation Scheme

In addition to the current and power accumulating after every sample, the shunt and bus voltage measurements are also collected. After all of the samples have been measured and the corresponding current and power calculations have been made, the accumulated average for each of these parameters is then loaded to the corresponding output registers, where the average can then be read.

6.3.1.2 Alert Pin

The INA226-Q1 has a single Alert Limit Register (07h), that allows the Alert pin to be programmed to respond to a single user-defined event or to a Conversion Ready notification if desired. The Mask/Enable Register allows the user to select from one of the five available functions to monitor and/or set the Conversion Ready bit to control the response of the Alert pin. Based on the function being monitored, the user then enters a value into the Alert Limit Register to set the corresponding threshold value that asserts the Alert pin.

The Alert pin allows for one of several available alert functions to be monitored to determine if a user-defined threshold has been exceeded. The five alert functions that can be monitored are:

- Shunt Voltage Over-Limit (SOL)
- Shunt Voltage Under-Limit (SUL)
- Bus Voltage Over-Limit (BOL)
- Bus Voltage Under-Limit (BUL)
- Power Over-Limit (POL)

The Alert pin is an open-drain output. This pin is asserted when the alert function selected in the Mask/Enable Register exceeds the value programmed into the Alert Limit Register. Only one of these alert functions can be enabled and monitored at a time. If multiple alert functions are enabled, the selected function in the highest significant bit position takes priority and responds to the Alert Limit Register value. For example, if the Shunt Voltage Over-Limit function and the Shunt Voltage Under-Limit function are both selected, the Alert pin asserts when the Shunt Voltage Register exceeds the value in the Alert Limit Register.

The Conversion Ready state of the device can also be monitored at the Alert pin to inform the user when the device has completed the previous conversion and is ready to begin a new conversion. Conversion Ready can be monitored at the Alert pin along with one of the alert functions. If an alert function and the Conversion Ready are both enabled to be monitored at the Alert pin, after the Alert pin is asserted, the Mask/Enable Register must be read following the alert to determine the source of the alert. By reading the Conversion Ready Flag (CVRF, bit 3), and the Alert Function Flag (AFF, bit 4) in the Mask/Enable Register, the source of the alert can be determined. If the Conversion Ready feature is not desired and the CNVR bit is not set, the Alert pin only responds to an exceeded alert limit based on the alert function enabled.

If the alert function is not used, the Alert pin can be left floating without impacting the operation of the device.

Refer to Figure 6-1 to see the relative timing of when the value in the Alert Limit Register is compared to the corresponding converted value. For example, if the alert function that is enabled is Shunt Voltage Over-Limit (SOL), following every shunt voltage conversion the value in the Alert Limit Register is compared to the

Copyright © 2026 Texas Instruments Incorporated

measured shunt voltage to determine if the measurements has exceeded the programmed limit. The AFF, bit 4 of the Mask/Enable Register, asserts high any time the measured voltage exceeds the value programmed into the Alert Limit Register. In addition to the AFF being asserted, the Alert pin is asserted based on the Alert Polarity Bit (APOL, bit 1 of the Mask/Enable Register). If the Alert Latch is enabled, the AFF and Alert pin remain asserted until either the Configuration Register (00h) is written to or the Mask/Enable Register is read.

The Bus Voltage alert functions compare the measured bus voltage to the Alert Limit Register following every bus voltage conversion and assert the AFF bit and Alert pin if the limit threshold is exceeded.

The Power Over-Limit alert function is also compared to the calculated power value following every bus voltage measurement conversion and asserts the AFF bit and Alert pin if the limit threshold is exceeded.

6.4 Device Functional Modes

6.4.1 Averaging and Conversion Time Considerations

The INA226-Q1 device offers programmable conversion times (t_{CT}) for both the shunt voltage and bus voltage measurements. The conversion times for these measurements can be selected from as fast as 140µs to as long as 8.244ms. The conversion time settings, along with the programmable averaging mode, allow the device to be configured to optimize the available timing requirements in a given application. For example, if a system requires that data be read every 5ms, the device can be configured with the conversion times set to 588 µs for both shunt and bus voltage measurements and the averaging mode set to 4. This configuration results in the data updating approximately every 4.7ms. The device can also be configured with a different conversion time setting for the shunt and bus voltage measurements. This type of approach is common in applications where the bus voltage tends to be relatively stable. This situation can allow for the time focused on the bus voltage measurement to be reduced relative to the shunt voltage measurement. The shunt voltage conversion time can be set to 4.156ms with the bus voltage conversion time set to 588µs, with the averaging mode set to 1. This configuration also results in data updating approximately every 4.7ms.

There are trade-offs associated with the settings for conversion time and the averaging mode used. The averaging feature can significantly improve the measurement accuracy by effectively filtering the signal. This approach allows the device to reduce any noise in the measurement that can be caused by noise coupling into the signal. A greater number of averages enables the device to be more effective in reducing the noise component of the measurement.

The conversion times selected can also have an impact on the measurement accuracy. Figure 6-2 shows multiple conversion times to show the impact of noise on the measurement. to achieve the highest accuracy measurement possible, use a combination of the longest allowable conversion times and highest number of averages, based on the timing requirements of the system.

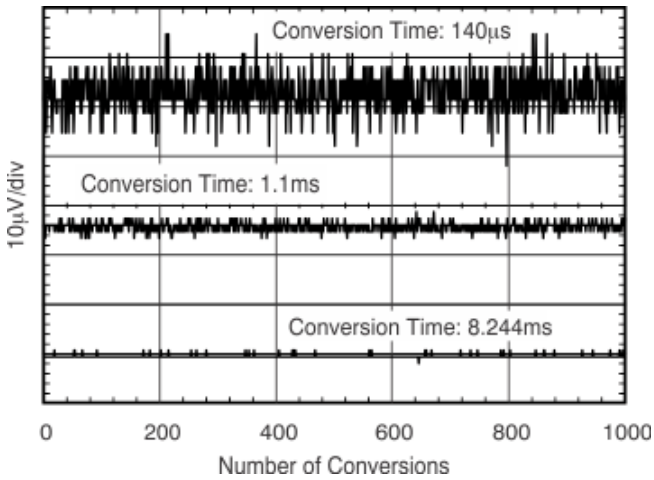

Figure 6-2. Noise vs Conversion Time

6.4.2 Filtering and Input Considerations

Measuring current is often noisy, and such noise can be difficult to define. The INA226-Q1 device offers several options for filtering by allowing the conversion times and number of averages to be selected independently in the Configuration Register (00h). The conversion times can be set independently for the shunt voltage and bus voltage measurements to allow added flexibility in configuring the monitoring of the power-supply bus.

The internal ADC is based on a delta-sigma (ΔΣ) front-end with a 500kHz (±30%) typical sampling rate. This architecture has good inherent noise rejection; however, transients that occur at or very close to the sampling rate harmonics can cause problems. Because these signals are at 1MHz and higher, the signals can be managed by incorporating filtering at the input of the device. The high frequency enables the use of low-value series resistors on the filter with negligible effects on measurement accuracy. In general, filtering the device input is only necessary if there are transients at exact harmonics of the 500kHz (±30%) sampling rate (greater than 1MHz). Filter using the lowest possible series resistance (typically 10Ω or less) and a ceramic capacitor. Recommended values for this capacitor are between 0.1µF and 1µF. Figure 6-3 shows the device with a filter added at the input.

Overload conditions are another consideration for the device inputs. The device inputs are specified to tolerate 40V across the inputs. A large differential scenario can be a short to ground on the load side of the shunt. This type of event can result in full power-supply voltage across the shunt (as long the power supply or energy storage capacitors support the voltage). Removing a short to ground can result in inductive kickbacks that can exceed the 40V differential and common-mode rating of the device. Inductive kickback voltages are best controlled by Zener-type transient-absorbing devices (commonly called *transzorbs*) combined with sufficient energy storage capacitance. See the TI Design, *Transient Robustness for Current Shunt Monitors* (TIDU473), which describes a high-side current shunt monitor used to measure the voltage developed across a current-sensing resistor when current passes through the resistor.

In applications that do not have large energy storage electrolytics on one or both sides of the shunt, an input overstress condition can result from an excessive dV/dt of the voltage applied to the input. A hard physical short is the most likely cause of this event, particularly in applications with no large electrolytics present. This problem occurs because an excessive dV/dt can activate the ESD protection in the device in systems where large currents are available. Testing demonstrates that the addition of 10Ω resistors in series with each input of the device sufficiently protects the inputs against this dV/dt failure up to the 40V rating of the device. Selecting these resistors in the range noted has minimal effect on accuracy.

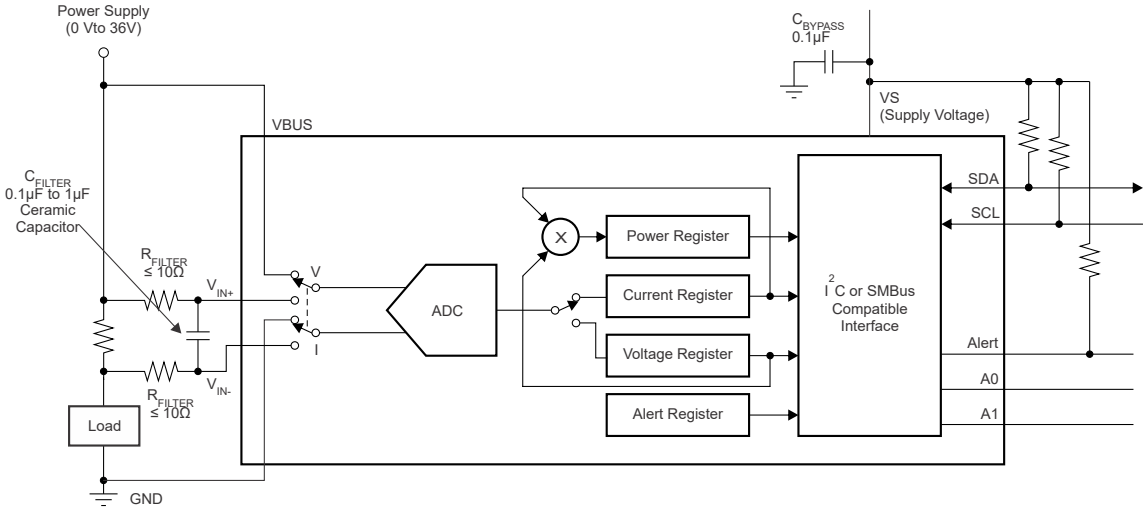

Figure 6-3. Input Filtering

Copyright © 2026 Texas Instruments Incorporated

6.5 Programming

An important aspect of the INA226-Q1 is that the device does not necessarily measure current or power. The device measures both the differential voltage applied between the IN+ and IN- input pins and the voltage applied to the VBUS pin. For the device to report both current and power values, the user must program the resolution of the Current Register (04h) and the value of the shunt resistor present in the application to develop the differential voltage applied between the input pins. The Power Register (03h) is internally set to be 25 times the programmed Current_LSB. Both the Current_LSB and shunt resistor value are used in the calculation of the Calibration Register value the device uses to calculate the corresponding current and power values based on the measured shunt and bus voltages.

The Calibration Register is calculated based on Equation 1. This equation includes the term Current_LSB, which is the programmed value for the LSB for the Current Register (04h). The user uses this value to convert the value in the Current Register (04h) to the actual current in amperes. The highest resolution for the Current Register (04h) can be obtained by using the smallest allowable Current_LSB based on the maximum expected current as shown in Equation 2. While this value yields the highest resolution, selecting a value for the Current_LSB to the nearest round number above this value is common to simplify the conversion of the Current Register (04h) and Power Register (03h) to amperes and watts respectively. The R_{SHUNT} term is the value of the external shunt used to develop the differential voltage across the input pins.

$$\text{CAL} = \frac{0.00512}{\text{Current_LSB} \times R_{SHUNT}} \tag{1}$$

where

- 0.00512 is an internal fixed value used to verify scaling is maintained properly

$$\text{Current_LSB} = \frac{\text{Maximum Expected Current}}{2^{15}} \tag{2}$$

After programming the Calibration Register, the Current Register (04h) and Power Register (03h) update accordingly based on the corresponding shunt voltage and bus voltage measurements. Until the Calibration Register is programmed, the Current Register (04h) and Power Register (03h) remain at zero.

6.5.1 Programming the Calibration Register

Figure 8-1 shows a nominal 10A load that creates a differential voltage of 20mV across a 2mΩ shunt resistor. The bus voltage for the INA226-Q1 is measured at the external VBUS input pin, which in this example is connected to the IN– pin to measure the voltage level delivered to the load. For this example, the VBUS pin measures less than 12V because the voltage at the IN– pin is 11.98V as a result of the voltage drop across the shunt resistor.

For this example, assuming a maximum expected current of 15A, the Current_LSB is calculated to be 457.7μA/bit using Equation 2. Using a value for the Current_LSB of 500μA/Bit or 1mA/Bit significantly simplifies the conversion from the Current Register (04h) and Power Register (03h) to amperes and watts. For this example, a value of 1mA/bit is selected for the Current_LSB. Using this value for the Current_LSB does trade a small amount of resolution for having a simpler conversion process on the user side. Using Equation 1 in this example with a Current_LSB value of 1mA/bit and a shunt resistor of 2mΩ results in a Calibration Register value of 2560, or A00h.

The Current Register (04h) is then calculated by multiplying the decimal value of the Shunt Voltage Register (01h) contents by the decimal value of the Calibration Register and then dividing by 2048, as shown in Equation 3. For this example, the Shunt Voltage Register contains a value of 8,000 (representing 20mV), which is multiplied by the Calibration Register value of 2560 and then divided by 2048 to yield a decimal value for the Current Register (04h) of 10000, or 2710h. Multiplying this value by 1mA/bit results in the original 10A level stated in the example.

$$\text{Current} = \frac{\text{ShuntVoltage} \times \text{CalibrationRegister}}{2048} \tag{3}$$

Copyright © 2026 Texas Instruments Incorporated

The LSB for the Bus Voltage Register (02h) is a fixed 1.25mV/bit, which means that the 11.98V present at the VBUS pin results in a register value of 2570h, or a decimal equivalent of 9584. Note that the MSB of the Bus Voltage Register (02h) is always zero because the VBUS pin is only able to measure positive voltages.

The Power Register (03h) is then be calculated by multiplying the decimal value of the Current Register, 10000, by the decimal value of the Bus Voltage Register (02h), 9584, and then dividing by 20,000, as defined in Equation 4. For this example, the result for the Power Register (03h) is 12B8h, or a decimal equivalent of 4792. Multiplying this result by the power LSB (25 times the [1 × 10^{-3} Current_LSB]) results in a power calculation of (4792 × 25mW/bit), or 119.82W. The power LSB has a fixed ratio to the Current_LSB of 25. For this example, a programmed 1mA/bit Current_LSB results in a power LSB of 25mW/bit. This ratio is internally programmed to verify that the scaling of the power calculation is within an acceptable range. A manual calculation for the power being delivered to the load uses a bus voltage of 11.98V ($12V_{CM}$ – 20mV shunt drop) multiplied by the load current of 10A to give a result of 119.8W.

$$\text{Power} = \frac{\text{Current} \times \text{BusVoltage}}{20000} \tag{4}$$

Table 6-1 lists the steps for configuring, measuring, and calculating the values for current and power for this device.

Table 6-1. Calculating Current and Power

STEP	REGISTER NAME	ADDRESS	CONTENTS	DEC	LSB	VALUE (1)
Step 1	Configuration Register	00h	4127h	—	—	—
Step 2	Shunt Register	01h	1F40h	8000	2.5µV	20mV
Step 3	Bus Voltage Register	02h	2570h	9584	1.25mV	11.98V
Step 4	Calibration Register	05h	A00h	2560	—	—
Step 5	Current Register	04h	2710	10000	1mA	10A
Step 6	Power Register	03h	12B8h	4792	25mW	119.82W

(1) Conditions: Load = 10A, V_{CM} = 12V, R_{SHUNT} = 2mΩ, and V_{VBUS} = 12V.

6.5.2 Programming the Power Measurement Engine

6.5.2.1 Calibration Register and Scaling

The Calibration Register enables the user to scale the Current Register (04h) and Power Register (03h) to the most useful value for a given application. For example, set the Calibration Register such that the largest possible number is generated in the Current Register (04h) or Power Register (03h) at the expected full-scale point. This approach yields the highest resolution using the previously calculated minimum Current_LSB in the equation for the Calibration Register. The Calibration Register can also be selected to provide values in the Current Register (04h) and Power Register (03h) that either provide direct decimal equivalents of the values being measured, or yield a round LSB value for each corresponding register. After these choices are made, the Calibration Register also offers possibilities for end user system-level calibration. After determining the exact current by using an external ammeter, the value of the Calibration Register can then be adjusted based on the measured current result of the INA226-Q1 to cancel the total system error as shown in Equation 5.

$$\text{Corrected_Full_Scale_Cal} = \text{trunc}\left[\frac{\text{Cal} \times \text{MeasShuntCurrent}}{\text{Device_Current}}\right] \tag{5}$$

6.5.3 Simple Current Shunt Monitor Usage (No Programming Necessary)

The device can be used without any programming if reading a shunt voltage drop and bus voltage with the default power-on reset configuration and continuous conversion of shunt and bus voltages is only necessary.

Without programming the device Calibration Register, the device is unable to provide either a valid current or power value, because these outputs are both derived using the values loaded into the Calibration Register.

Copyright © 2026 Texas Instruments Incorporated

6.5.4 Default Settings

The default power-up states of the registers are shown in the *Register Maps* section of this data sheet. These registers are volatile, and if programmed to a value other than the default values shown in Table 7-1, the registers must be re-programmed at every device power-up. Detailed information on programming the Calibration Register specifically is given in the *Programming* section and calculated based on Equation 1.

6.5.5 Bus Overview

The INA226-Q1 offers compatibility with both I^2C and SMBus interfaces. The I^2C and SMBus protocols are essentially compatible with one another.

The I^2C interface is used throughout this datasheet as the primary example, with SMBus protocol specified only when a difference between the two systems is discussed. Two lines, SCL and SDA, connect the device to the bus. Both SCL and SDA are open drain connections.

The device that initiates a data transfer is called a *controller*, and the devices controlled by the controller are *targets*. The bus must be controlled by a controller device that generates the serial clock (SCL), controls the bus access, and generates START and STOP conditions.

To address a specific device, the controller initiates a start condition by pulling the data signal line (SDA) from a high to a low logic level while SCL is high. All targets on the bus shift in the target address byte on the rising edge of SCL, with the last bit indicating whether a read or write operation is intended. During the ninth clock pulse, the target being addressed responds to the controller by generating an Acknowledge and pulling SDA low.

Data transfer is then initiated and eight bits of data are sent, followed by an *Acknowledge* bit. During data transfer, SDA must remain stable while SCL is high. Any change in SDA while SCL is high is interpreted as a start or stop condition.

After all data have been transferred, the controller generates a stop condition, indicated by pulling SDA from low to high while SCL is high. The device includes a 28ms time out on the interface to prevent locking up the bus.

Copyright © 2026 Texas Instruments Incorporated

6.5.5.1 Serial Bus Address

To communicate with the INA226-Q1, the controller must first address target devices using a target address byte. The target address byte consists of seven address bits and a direction bit that indicates whether the action is to be a read or write operation.

The device has two address pins, A0 and A1. Table 6-2 lists the pin logic levels for each of the 16 possible addresses. The device samples the state of pins A0 and A1 on every bus communication. Establish the pin states before any activity on the interface occurs.

Table 6-2. Address Pins and Target Addresses

A1	A0	TARGET ADDRESS
GND	GND	1000000
GND	VS	1000001
GND	SDA	1000010
GND	SCL	1000011
VS	GND	1000100
VS	VS	1000101
VS	SDA	1000110
VS	SCL	1000111
SDA	GND	1001000
SDA	VS	1001001
SDA	SDA	1001010
SDA	SCL	1001011
SCL	GND	1001100
SCL	VS	1001101
SCL	SDA	1001110
SCL	SCL	1001111

6.5.5.2 Serial Interface

The INA226-Q1 operates only as a target device on both the I^2C bus and the SMBus. Connections to the bus are made using the open-drain SDA and SCL lines. The SDA and SCL pins feature integrated spike suppression filters and Schmitt triggers to minimize the effects of input spikes and bus noise. Although the device integrates spike suppression into the digital I/O lines, proper layout techniques help minimize the amount of coupling into the communication lines. This noise introduction can occur from capacitively coupling signal edges between the two communication lines themselves or from other switching noise sources present in the system. Routing traces in parallel with ground in between layers on a printed circuit board (PCB) typically reduces the effects of coupling between the communication lines. Shielded communication lines reduces the possibility of unintended noise coupling into the digital I/O lines that can be incorrectly interpreted as start or stop commands.

The INA226-Q1 supports the transmission protocol for fast mode (1kHz to 400kHz) and high-speed mode (1kHz to 2.94MHz). All data bytes are transmitted most significant byte first.

6.5.5.3 Writing to and Reading From the INA226-Q1

Accessing a specific register on the INA226-Q1 is accomplished by writing the appropriate value to the register pointer. Refer to Table 7-1 for a complete list of registers and corresponding addresses. The value for the register pointer (as shown in Figure 6-7) is the first byte transferred after the target address byte with the R/ $\overline{W}$ bit low. Every write operation to the device requires a value for the register pointer.

Writing to a register begins with the first byte transmitted by the controller. This byte is the target address, with the R/ $\overline{W}$ bit low. The device then acknowledges receipt of a valid address. The next byte transmitted by the controller is the address of the register which data is written to. This register address value updates the register pointer to the desired register. The next two bytes are written to the register addressed by the register pointer.

Copyright © 2026 Texas Instruments Incorporated

The device acknowledges receipt of each data byte. The controller can terminate data transfer by generating a start or stop condition.

When reading from the device, the last value stored in the register pointer by a write operation determines which register is read during a read operation. To change the register pointer for a read operation, a new value must be written to the register pointer. This write is accomplished by issuing a target address byte with the R/ $\overline{W}$ bit low, followed by the register pointer byte. No additional data are required. The controller then generates a start condition and sends the target address byte with the R/ $\overline{W}$ bit high to initiate the read command. The next byte is transmitted by the target and is the most significant byte of the register indicated by the register pointer. This byte is followed by an *Acknowledge* from the controller; then the target transmits the least significant byte. The controller acknowledges receipt of the data byte. The controller can terminate data transfer by generating a *Not-Acknowledge* after receiving any data byte, or generating a start or stop condition. If repeated reads from the same register are desired, continually sending the register pointer bytes is not necessary; the device retains the register pointer value until the value is changed by the next write operation.

Figure 6-4 shows the write operation timing diagram. Figure 6-5 shows the read operation timing diagram.

Note

Register bytes are sent most-significant byte first, followed by the least significant byte.

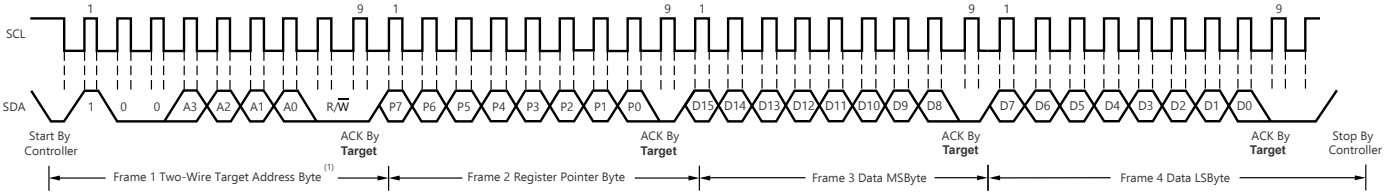

1. The value of the Target Address byte is determined by the settings of the A0 and A1 pins. Refer to Table 6-2.

Figure 6-4. Timing Diagram for Write Word Format

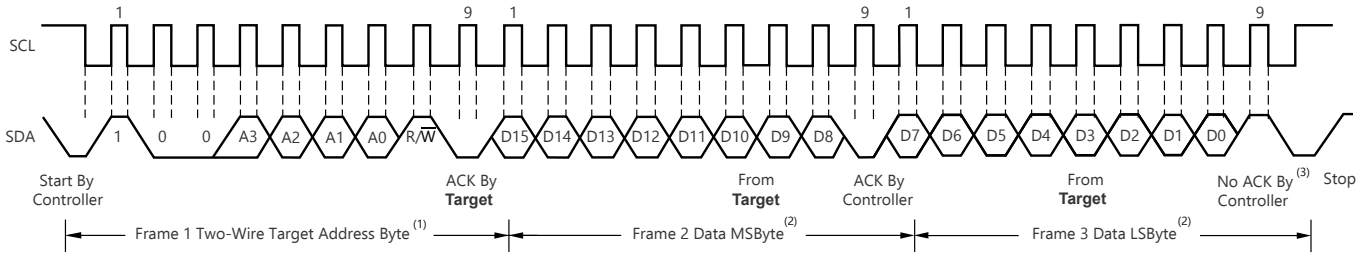

1. The value of the Target Address byte is determined by the settings of the A0 and A1 pins. Refer to Table 6-2.
2. Read data is from the last register pointer location. If a new register is desired, the register pointer must be updated. See Figure 6-7.
3. ACK by Controller can also be sent.

Figure 6-5. Timing Diagram for Read Word Format

Figure 6-6 shows the timing diagram for the SMBus Alert response operation. Figure 6-7 illustrates a typical register pointer configuration.

Copyright © 2026 Texas Instruments Incorporated

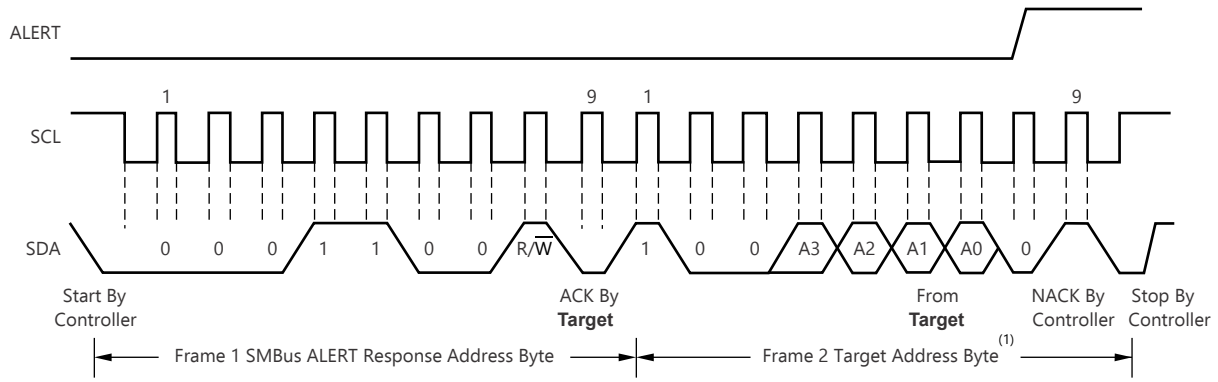

1. The value of the Target Address Byte is determined by the settings of the A0 and A1 pins. Refer to Table 6-2.

Figure 6-6. Timing Diagram for SMBus ALERT

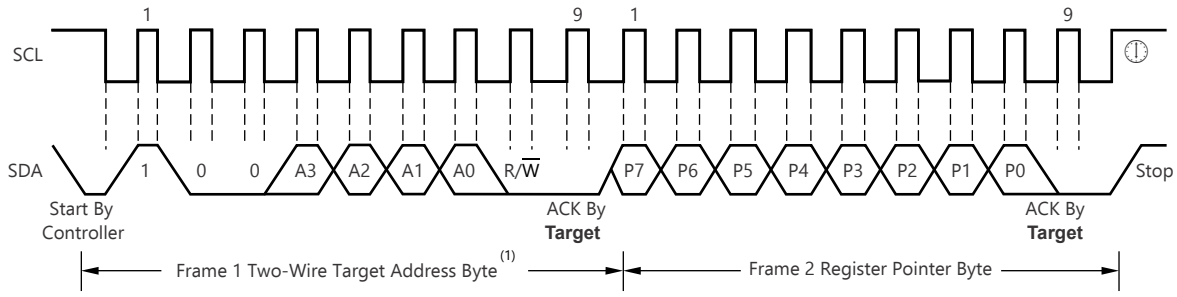

1. The value of the Target Address Byte is determined by the settings of the A0 and A1 pins. Refer to Table 6-2.

Figure 6-7. Typical Register Pointer Set

6.5.5.3.1 High-Speed I²C Mode

When the bus is idle, both the SDA and SCL lines are pulled high by the pullup resistors. The controller generates a start condition followed by a valid serial byte containing high-speed (HS) controller code *00001XXX*. This transmission is made in fast (400kHz) or standard (100kHz) (F/S) mode at no more than 400kHz. The device does not acknowledge the HS controller code, but does recognize the code and switches the internal filters to support 2.94MHz operation.

The controller then generates a repeated start condition (a repeated start condition has the same timing as the start condition). After this repeated start condition, the protocol is the same as F/S mode, except that transmission speeds up to 2.94MHz are allowed. Instead of using a stop condition, use repeated start conditions to secure the bus in HS-mode. A stop condition ends the HS-mode and switches all the internal filters of the device to support the F/S mode.

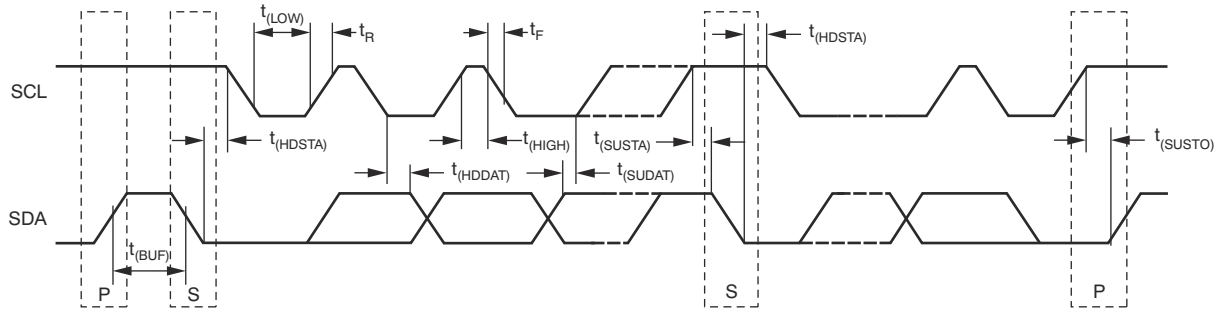

Figure 6-8. Bus Timing Diagram

Copyright © 2026 Texas Instruments Incorporated

Table 6-3. Bus Timing Diagram Definitions (1)

PARAMETER		FAST MODE		HIGH-SPEED MODE		UNIT
		MIN	MAX	MIN	MAX	
SCL operating frequency	$f_{(SCL)}$	0.001	0.4	0.001	2.94	MHz
Bus free time between stop and start conditions	$t_{(BUF)}$	600		160		ns
Hold time after repeated START condition. After this period, the first clock is generated.	$t_{(HDSTA)}$	100		100		ns
Repeated start condition setup time	$t_{(SUSTA)}$	100		100		ns
STOP condition setup time	$t_{(SUSTO)}$	100		100		ns
Data hold time	$t_{(HDDAT)}$	10	900	10	100	ns
Data setup time	$t_{(SUDAT)}$	100		20		ns
SCL clock low period	$t_{(LOW)}$	1300		200		ns
SCL clock high period	$t_{(HIGH)}$	600		60		ns
Data fall time	t_F		300		80	ns
Clock fall time	t_F		300		40	ns
Clock rise time	t_R		300		40	ns
Clock/data rise time for SCLK ≤ 100kHz	t_R		1000			ns

(1) Values based on a statistical analysis of a one-time sample of devices. Minimum and maximum values are not guaranteed and not production tested.

6.5.5.4 SMBus Alert Response

The INA226-Q1 is designed to respond to the SMBus Alert Response address. The SMBus Alert Response provides a quick fault identification for simple target devices. When an Alert occurs, the controller can broadcast the Alert Response target address (0001 100) with the Read/Write bit set high. Following this Alert Response, any target device that generates an alert identifies the target device by acknowledging the Alert Response and sending the address on the bus.

The Alert Response can activate several different target devices simultaneously, similar to the I^2C General Call. If more than one target attempts to respond, bus arbitration rules apply. The losing device does not generate an Acknowledge and continues to hold the Alert line low until the interrupt is cleared.

Copyright © 2026 Texas Instruments Incorporated

7 Registers

7.1 Register Maps

The INA226-Q1 uses a bank of registers for holding configuration settings, measurement results, minimum and maximum limits, and status information. Table 7-1 summarizes the device registers; refer to the *Functional Block Diagram* section for an illustration of the registers.

All 16-bit device registers are two 8-bit bytes using the I^2C interface.

Table 7-1. Register Set Summary

POINTER ADDRESS			POWER-ON RESET		
HEX	REGISTER NAME	FUNCTION	BINARY	HEX	TYPE(1)
00h	Configuration Register	All-register reset, shunt voltage and bus voltage ADC conversion times and averaging, operating mode.	01000001 00100111	4127	R/ W
01h	Shunt Voltage Register	Shunt voltage measurement data.	00000000 00000000	0000	R
02h	Bus Voltage Register	Bus voltage measurement data.	00000000 00000000	0000	R
03h	Power Register(2)	Contains the value of the calculated power being delivered to the load.	00000000 00000000	0000	R
04h	Current Register(2)	Contains the value of the calculated current flowing through the shunt resistor.	00000000 00000000	0000	R
05h	Calibration Register	Sets full-scale range and LSB of current and power measurements. Overall system calibration.	00000000 00000000	0000	R/ W
06h	Mask/Enable Register	Alert configuration and Conversion Ready flag.	00000000 00000000	0000	R/ W
07h	Alert Limit Register	Contains the limit value to compare to the selected Alert function.	00000000 00000000	0000	R/ W
FEh	Manufacturer ID Register	Contains unique manufacturer identification number.	0101010001001001	5449	R
FFh	Die ID Register	Contains unique die identification number.	0010001001100000 or 0010001001100001	2260 or 2261(3)	R

(1) Type: **R** = Read-Only, **R/ W** = Read/Write.
(2) The Current Register (04h) and Power Register (03h) default to '0' because the Calibration register defaults to '0', yielding zero current and power values until the Calibration register is programmed.
(3) Die COO: 2260 = USA or Japan, 2261 = USA

7.1.1 Configuration Register (00h) (Read/Write)

Table 7-2. Configuration Register (00h) (Read/Write) Descriptions

BIT NO.	D15	D14	D13	D12	D11	D10	D9	D8	D7	D6	D5	D4	D3	D2	D1	D0
BIT NAME	RST	—	—	—	AVG2	AVG1	AVG0	VBUSCT2	VBUSCT1	VBUSCT0	VSHCT2	VSHCT1	VSHCT0	MODE3	MODE2	MODE1
POR VALUE	0	1	0	0	0	0	0	1	0	0	1	0	0	1	1	1

The Configuration Register settings control the operating modes for the device. This register controls the conversion time settings for both the shunt and bus voltage measurements as well as the averaging mode used. The operating mode that controls what signals are selected to be measured is also programmed in the Configuration Register.

The Configuration Register can be read from at any time without impacting or affecting the device settings or a conversion in progress. Writing to the Configuration Register halts any conversion in progress until the write sequence is completed resulting in a new conversion starting based on the new contents of the Configuration Register (00h). This halt prevents any uncertainty in the conditions used for the next completed conversion.

Copyright © 2026 Texas Instruments Incorporated

RST: **Reset Bit**

Bit 15 Setting this bit to '1' generates a system reset that is the same as power-on reset. Resets all registers to default values; this bit self-clears.

AVG: **Averaging Mode**

Bits 9–11 Determines the number of samples that are collected and averaged. Table 7-3 shows all the AVG bit settings and related number of averages for each bit setting.

Table 7-3. AVG Bit Settings[11:9] Combinations

AVG2 D11	AVG1 D10	AVG0 D9	NUMBER OF AVERAGES(1)
0	0	0	1
0	0	1	4
0	1	0	16
0	1	1	64
1	0	0	128
1	0	1	256
1	1	0	512
1	1	1	1024

(1) Shaded values are default.

VBUSCT: **Bus Voltage Conversion Time**

Bits 6–8 Sets the conversion time for the bus voltage measurement. Table 7-4 shows the VBUSCT bit options and related conversion times for each bit setting.

Table 7-4. VBUSCT Bit Settings [8:6] Combinations

VBUSCT2 D8	VBUSCT1 D7	VBUSCT0 D6	CONVERSION TIME(1)
0	0	0	140µs
0	0	1	204µs
0	1	0	332µs
0	1	1	588µs
1	0	0	1.1ms
1	0	1	2.116ms
1	1	0	4.156ms
1	1	1	8.244ms

(1) Shaded values are default.

VSHCT: **Shunt Voltage Conversion Time**

Bits 3–5 Sets the conversion time for the shunt voltage measurement. Table 7-5 shows the VSHCT bit options and related conversion times for each bit setting.

Table 7-5. VSHCT Bit Settings [5:3] Combinations

VSHCT2 D8	VSHCT1 D7	VSHCT0 D6	CONVERSION TIME(1)
0	0	0	140µs
0	0	1	204µs
0	1	0	332µs
0	1	1	588µs
1	0	0	1.1ms
1	0	1	2.116ms
1	1	0	4.156ms

Copyright © 2026 Texas Instruments Incorporated

Table 7-5. VSHCT Bit Settings [5:3] Combinations (continued)

VSHCT2 D8	VSHCT1 D7	VSHCT0 D6	CONVERSION TIME(1)
1	1	1	8.244ms

(1) Shaded values are default.

MODE: **Operating Mode**

Bits 0-2 Selects continuous, triggered, or power-down mode of operation. These bits default to continuous shunt and bus measurement mode. The mode settings are shown in Table 7-6.

Table 7-6. Mode Settings [2:0] Combinations

MODE3 D2	MODE2 D1	MODE1 D0	MODE(1)
0	0	0	Power-Down (or Shutdown)
0	0	1	Shunt Voltage, Triggered
0	1	0	Bus Voltage, Triggered
0	1	1	Shunt and Bus, Triggered
1	0	0	Power-Down (or Shutdown)
1	0	1	Shunt Voltage, Continuous
1	1	0	Bus Voltage, Continuous
1	1	1	Shunt and Bus, Continuous

(1) Shaded values are default.

7.1.2 Shunt Voltage Register (01h) (Read-Only)

The Shunt Voltage Register stores the current shunt voltage reading, V_{SHUNT}. Negative numbers are represented in two's complement format. Generate the two's complement of a negative number by complementing the absolute value binary number and adding 1. An MSB = '1' denotes a negative number.

Example: For a value of V_{SHUNT} = –80mV:

1. Take the absolute value: 80mV
2. Translate this number to a whole decimal number (80mV ÷ 2.5µV) = 32000
3. Convert this number to binary = 0111 1101 0000 0000
4. Complement the binary result = 1000 0010 1111 1111
5. Add '1' to the complement to create the two's complement result = 1000 0011 0000 0000 = 8300h

If averaging is enabled, this register displays the averaged value.

Full-scale range = 81.92mV (decimal = 7FFF); LSB: 2.5µV.

Table 7-7. Shunt Voltage Register (01h) (Read-Only) Description

BIT #	D15	D14	D13	D12	D11	D10	D9	D8	D7	D6	D5	D4	D3	D2	D1	D0
BIT NAME	SIGN	SD14	SD13	SD12	SD11	SD10	SD9	SD8	SD7	SD6	SD5	SD4	SD3	SD2	SD1	SD0
POR VALUE	0	0	0	0	0	0	0	0	0	0	0	0	0	0	0	0

7.1.3 Bus Voltage Register (02h) (Read-Only)

The Bus Voltage Register stores the most recent bus voltage reading, VBUS.

If averaging is enabled, this register displays the averaged value.

Full-scale range = 40.96V (decimal = 7FFF); LSB = 1.25mV.

Table 7-8. Bus Voltage Register (02h) (Read-Only) Description

BIT #	D15(1)	D14	D13	D12	D11	D10	D9	D8	D7	D6	D5	D4	D3	D2	D1	D0
BIT NAME	—	BD14	BD13	BD12	BD11	BD10	BD9	BD8	BD7	BD6	BD5	BD4	BD3	BD2	BD1	BD0

Copyright © 2026 Texas Instruments Incorporated

Table 7-8. Bus Voltage Register (02h) (Read-Only) Description (continued)

BIT #	D15(1)	D14	D13	D12	D11	D10	D9	D8	D7	D6	D5	D4	D3	D2	D1	D0
POR VALUE	0	0	0	0	0	0	0	0	0	0	0	0	0	0	0	0

(1) D15 is always zero because bus voltage can only be positive.

Copyright © 2026 Texas Instruments Incorporated

7.1.4 Power Register (03h) (Read-Only)

If averaging is enabled, this register displays the averaged value.

The Power Register LSB is internally programmed to equal 25 times the programmed value of the Current_LSB.

The Power Register records power in Watts by multiplying the decimal values of the Current Register with the decimal value of the Bus Voltage Register according to Equation 4.

Table 7-9. Power Register (03h) (Read-Only) Description

BIT #	D15	D14	D13	D12	D11	D10	D9	D8	D7	D6	D5	D4	D3	D2	D1	D0
BIT NAME	PD15	PD14	PD13	PD12	PD11	PD10	PD9	PD8	PD7	PD6	PD5	PD4	PD3	PD2	PD1	PD0
POR VALUE	0	0	0	0	0	0	0	0	0	0	0	0	0	0	0	0

7.1.5 Current Register (04h) (Read-Only)

If averaging is enabled, this register displays the averaged value.

The value of the Current Register is calculated by multiplying the decimal value in the Shunt Voltage Register with the decimal value of the Calibration Register, according to Equation 3.

Table 7-10. Current Register (04h) (Read-Only) Register Description

BIT #	D15	D14	D13	D12	D11	D10	D9	D8	D7	D6	D5	D4	D3	D2	D1	D0
BIT NAME	CSIGN	CD14	CD13	CD12	CD11	CD10	CD9	CD8	CD7	CD6	CD5	CD4	CD3	CD2	CD1	CD0
POR VALUE	0	0	0	0	0	0	0	0	0	0	0	0	0	0	0	0

7.1.6 Calibration Register (05h) (Read/Write)

This register provides the device with the value of the shunt resistor that is present to create the measured differential voltage. The register also sets the resolution of the Current Register. Programming this register sets the Current_LSB and the Power_LSB. This register is also used in overall system calibration. See the *Programming the Calibration Register* for additional information on programming the Calibration Register.

Table 7-11. Calibration Register (05h) (Read/Write) Description

BIT #	D15	D14	D13	D12	D11	D10	D9	D8	D7	D6	D5	D4	D3	D2	D1	D0
BIT NAME	—	FS14	FS13	FS12	FS11	FS10	FS9	FS8	FS7	FS6	FS5	FS4	FS3	FS2	FS1	FS0
POR VALUE	0	0	0	0	0	0	0	0	0	0	0	0	0	0	0	0

7.1.7 Mask/Enable Register (06h) (Read/Write)

The Mask/Enable Register selects the function that is enabled to control the Alert pin as well as how that pin functions. If multiple functions are enabled, the highest significant bit position Alert Function (D15-D11) takes priority and responds to the Alert Limit Register.

Table 7-12. Mask/Enable Register (06h) (Read/Write)

BIT #	D15	D14	D13	D12	D11	D10	D9	D8	D7	D6	D5	D4	D3	D2	D1	D0
BIT NAME	SOL	SUL	BOL	BUL	POL	CNVR	—	—	—	—	—	AFF	CVRF	OVF	APOL	LEN
POR VALUE	0	0	0	0	0	0	0	0	0	0	0	0	0	0	0	0

SOL: **Shunt Voltage Over-Voltage**

Bit 15 Setting this bit high configures the Alert pin to be asserted if the shunt voltage measurement following a conversion exceeds the value programmed in the Alert Limit Register.

SUL: **Shunt Voltage Under-Voltage**

Copyright © 2026 Texas Instruments Incorporated

Bit 14	Setting this bit high configures the Alert pin to be asserted if the shunt voltage measurement following a conversion drops below the value programmed in the Alert Limit Register.
BOL:	**Bus Voltage Over-Voltage**
Bit 13	Setting this bit high configures the Alert pin to be asserted if the bus voltage measurement following a conversion exceeds the value programmed in the Alert Limit Register.
BUL:	**Bus Voltage Under-Voltage**
Bit 12	Setting this bit high configures the Alert pin to be asserted if the bus voltage measurement following a conversion drops below the value programmed in the Alert Limit Register.
POL:	**Power Over-Limit**
Bit 11	Setting this bit high configures the Alert pin to be asserted if the Power calculation made following a bus voltage measurement exceeds the value programmed in the Alert Limit Register.
CNVR:	**Conversion Ready**
Bit 10	Setting this bit high configures the Alert pin to be asserted when the Conversion Ready Flag, Bit 3, is asserted indicating that the device is ready for the next conversion.
AFF:	**Alert Function Flag**
Bit 4	While only one Alert Function can be monitored at the Alert pin at a time, the Conversion Ready can also be enabled to assert the Alert pin. Reading the Alert Function Flag following an alert allows the user to determine if the Alert Function is the source of the Alert. When the Alert Latch Enable bit is set to Latch mode, the Alert Function Flag bit clears only when the Mask/Enable Register is read. When the Alert Latch Enable bit is set to Transparent mode, the Alert Function Flag bit is cleared following the next conversion that does not result in an Alert condition.
CVRF:	**Conversion Ready Flag**
Bit 3	Although the device can be read at any time, and the data from the last conversion is available, the Conversion Ready Flag bit is provided to help coordinate one-shot or triggered conversions. The Conversion Ready Flag bit is set after all conversions, averaging, and multiplications are complete. Conversion Ready Flag bit clears under the following conditions: 1.) Writing to the Configuration Register (except for Power-Down selection) 2.) Reading the Mask/Enable Register
OVF:	**Math Overflow Flag**
Bit 2	This bit is set to '1' if an arithmetic operation resulted in an overflow error. The bit indicates that current and power data can be invalid.
APOL:	**Alert Polarity bit; sets the Alert pin polarity.**
Bit 1	1 = Inverted (active-high open collector) 0 = Normal (active-low open collector) (default)
LEN:	**Alert Latch Enable; configures the latching feature of the Alert pin and Alert Flag bits.**
Bit 0	1 = Latch enabled 0 = Transparent (default) When the Alert Latch Enable bit is set to Transparent mode, the Alert pin and Flag bit resets to the idle states when the fault has been cleared. When the Alert Latch Enable bit is set to Latch mode, the Alert pin and Alert Flag bit remains active following a fault until the Mask/Enable Register has been read.

Copyright © 2026 Texas Instruments Incorporated

7.1.8 Alert Limit Register (07h) (Read/Write)

The Alert Limit Register contains the value used to compare to the register selected in the Mask/Enable Register to determine if a limit has been exceeded.

Table 7-13. Alert Limit Register (07h) (Read/Write) Description

BIT #	D15	D14	D13	D12	D11	D10	D9	D8	D7	D6	D5	D4	D3	D2	D1	D0
BIT NAME	AUL15	AUL14	AUL13	AUL12	AUL11	AUL10	AUL9	AUL8	AUL7	AUL6	AUL5	AUL4	AUL3	AUL2	AUL1	AUL0
POR VALUE	0	0	0	0	0	0	0	0	0	0	0	0	0	0	0	0

7.1.9 Manufacturer ID Register (FEh) (Read-Only)

The Manufacturer ID Register stores a unique identification number for the manufacturer.

Table 7-14. Manufacturer ID Register (FEh) (Read-Only) Description

BIT #	D15	D14	D13	D12	D11	D10	D9	D8	D7	D6	D5	D4	D3	D2	D1	D0
BIT NAME	ID15	ID14	ID13	ID12	ID11	ID10	ID9	ID8	ID7	ID6	ID5	ID4	ID3	ID2	ID1	ID0
POR VALUE	0	1	0	1	0	1	0	0	0	1	0	0	1	0	0	1

ID:	Manufacturer ID Bits
Bits 0-15	Stores the manufacturer identification bits

7.1.10 Die ID Register (FFh) (Read-Only)

The Die ID Register stores a unique identification number and the revision ID for the die.

Table 7-15. Die ID Register (FFh) (Read-Only) Description

BIT #	D15	D14	D13	D12	D11	D10	D9	D8	D7	D6	D5	D4	D3	D2	D1	D0
BIT NAME	DID11	DID10	DID9	DID8	DID7	DID6	DID5	DID4	DID3	DID2	DID1	DID0	RID3	RID2	RID1	RID0
POR VALUE	0	0	0	0	0	0	0	0	0	0	0	0	0	0	0	0

DID:	Device ID Bits
Bits 4-15	Stores the device identification bits

RID:	Die Revision ID Bits
Bit 0-3	Stores the device revision identification bits

Copyright © 2026 Texas Instruments Incorporated

8 Application and Implementation

Note

Information in the following applications sections is not part of the TI component specification, and TI does not warrant its accuracy or completeness. TI's customers are responsible for determining suitability of components for their purposes, as well as validating and testing their design implementation to confirm system functionality.

8.1 Application Information

The INA226-Q1 is a current shunt and power monitor with an I2C™ compatible interface. The device monitors both a shunt voltage drop and bus supply voltage. Programmable calibration value, conversion times, and averaging, combined with an internal multiplier, enable direct readouts of current in amperes and power in watts.

8.2 Typical Applications

8.2.1 High-Side Sensing Circuit Application

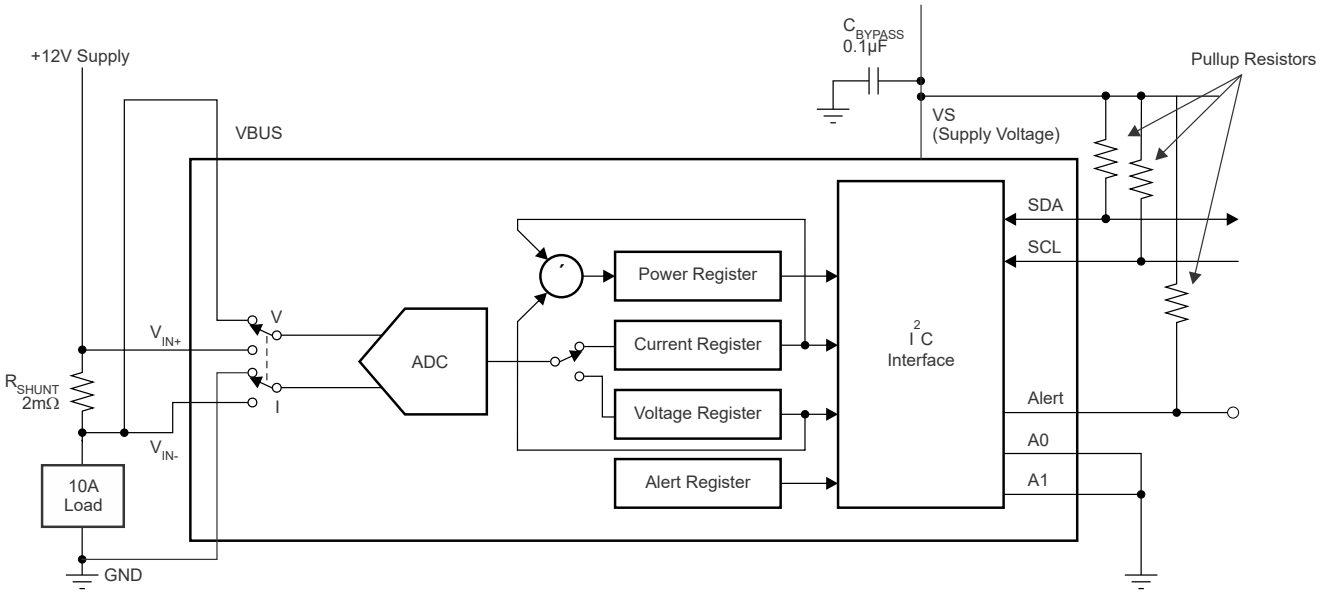

Figure 8-1. Typical Circuit Configuration, INA226-Q1

8.2.1.1 Design Requirements

INA226-Q1 measures the voltage developed across a current-sensing resistor (R_{SHUNT}) when current passes through the resistor. The device also measures the bus supply voltage and can calculate power when calibrated. The device comes with alert capability where the alert pin can be programmed to respond to a user-defined event or to a conversion ready notification. This design illustrates the ability of the alert pin to respond to a set threshold.

Copyright © 2026 Texas Instruments Incorporated

8.2.1.2 Detailed Design Procedure

The Alert pin can be configured to respond to one of the five alert functions described in the *Alert Pin* section. The alert pin must to be pulled up to the V_{VS} pin voltage via the pull-up resistors. The configuration register is set based on the required conversion time and averaging. The Mask/Enable Register is set to identify the required alert function and the Alert Limit Register is set to the limit value used for comparison.

8.2.1.3 Application Curves

Figure 8-2 shows the Alert pin response to a shunt voltage over-limit of 80mV for a conversion time (t_{CT}) of 1.1ms and averaging set to 1. Figure 8-3 shows the response for the same limit but with the conversion time reduced to 140µs.

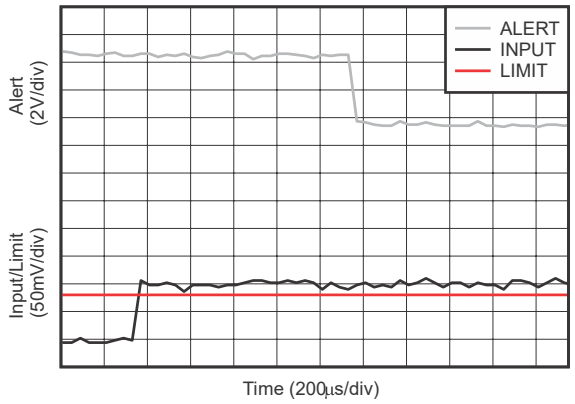

See Table 8-1 t_{CT} = 1.1ms
See Table 8-3 See Table 8-4

Figure 8-2. Alert Response

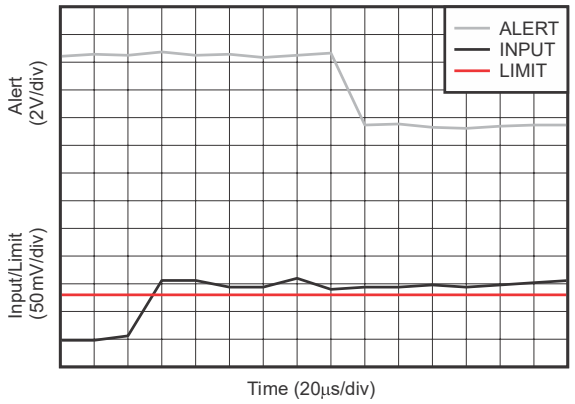

See Table 8-2 t_{CT} = 140µs
See Table 8-3 See Table 8-4

Figure 8-3. Alert Response

Table 8-1. Configuration Register (00h) Settings for Figure 8-2 (Value = 4025h)

BIT #	D15	D14	D13	D12	D11	D10	D9	D8	D7	D6	D5	D4	D3	D2	D1	D0
BIT NAME	RST	—	—	—	AVG2	AVG1	AVG0	VBUSCT 2	VBUSCT 1	VBUSCT 0	V_{SH}CT2	V_{SH}CT1	V_{SH}CT0	MODE3	MODE2	MODE1
POR VALUE	0	1	0	0	0	0	0	0	0	0	1	0	0	1	0	1

Table 8-2. Configuration Register (00h) Settings for Figure 8-3 (Value = 4005h)

BIT #	D15	D14	D13	D12	D11	D10	D9	D8	D7	D6	D5	D4	D3	D2	D1	D0
BIT NAME	RST	—	—	—	AVG2	AVG1	AVG0	VBUSCT 2	VBUSCT 1	VBUSCT 0	V_{SH}CT2	V_{SH}CT1	V_{SH}CT0	MODE3	MODE2	MODE1
POR VALUE	0	1	0	0	0	0	0	0	0	0	0	0	0	1	0	1

Table 8-3. Mask/Enable Register (06h) Settings for Figure 8-2 and Figure 8-3 (Value = 8000h)

BIT #	D15	D14	D13	D12	D11	D10	D9	D8	D7	D6	D5	D4	D3	D2	D1	D0
BIT NAME	SOL	SUL	BOL	BUL	POL	CNVR	—	—	—	—	—	AFF	CVRF	OVF	APOL	LEN
POR VALUE	1	0	0	0	0	0	0	0	0	0	0	0	0	0	0	0

Table 8-4. Alert Limit Register (07h) Settings for Figure 8-2 and Figure 8-3 (Value = 7D00)

BIT #	D15	D14	D13	D12	D11	D10	D9	D8	D7	D6	D5	D4	D3	D2	D1	D0
BIT NAME	AUL15	AUL14	AUL13	AUL12	AUL11	AUL10	AUL9	AUL8	AUL7	AUL6	AUL5	AUL4	AUL3	AUL2	AUL1	AUL0
POR VALUE	0	1	1	1	1	1	0	1	0	0	0	0	0	0	0	0

Copyright © 2026 Texas Instruments Incorporated

8.3 Power Supply Recommendations

The input circuitry of the device can accurately measure signals on common-mode voltages beyond the power supply voltage, V_{VS}. For example, the voltage applied to the V_{VS} power supply terminal can be 5V, whereas the load power-supply voltage being monitored (the common-mode voltage) can be as high as 36V. Note also that the device can withstand the full 0V to 36V range at the input terminals, regardless of whether the device has power applied or not.

Place the required power-supply bypass capacitors as close as possible to the supply and ground terminals of the device to provide stability. A typical value for this supply bypass capacitor is 0.1µF. Applications with noisy or high-impedance power supplies can require additional decoupling capacitors to reject power-supply noise.

8.4 Layout

8.4.1 Layout Guidelines

Connect the input pins (IN+ and IN-) to the sensing resistor using a Kelvin connection or a 4-wire connection. These connection techniques verify that only the current-sensing resistor impedance is detected between the input pins. Poor routing of the current-sensing resistor commonly results in additional resistance present between the input pins. Given the very low ohmic value of the current-sensing resistor, any additional high-current carrying impedance causes significant measurement errors. Place the power-supply bypass capacitor as close as possible to the supply and ground pins.

8.4.2 Layout Example

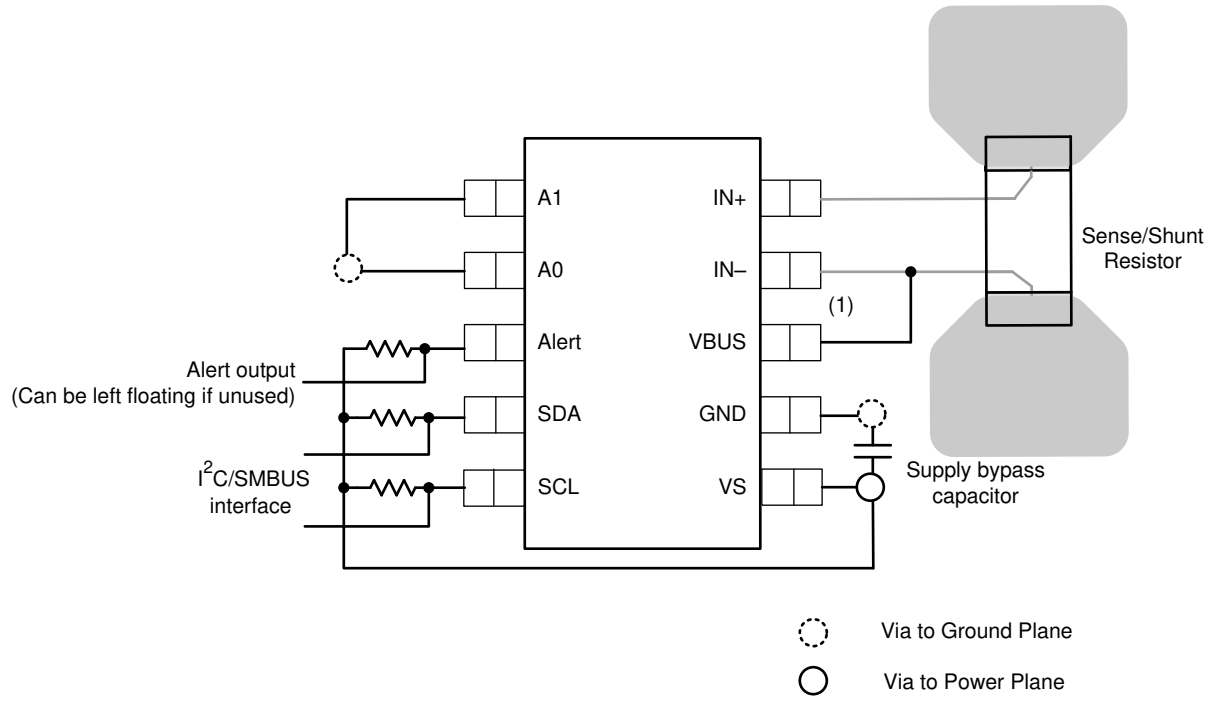

(1) connect the VBUS pin to the power supply rail.

Figure 8-4. INA226-Q1 Layout Example

9 Device and Documentation Support

9.1 Device Support

9.1.1 Development Support

- INA226EVM Evaluation Board and Software Tutorial (SBOU113)

9.2 Receiving Notification of Documentation Updates

To receive notification of documentation updates, navigate to the device product folder on ti.com. Click on *Notifications* to register and receive a weekly digest of any product information that has changed. For change details, review the revision history included in any revised document.

9.3 Support Resources

TI E2E™ support forums are an engineer's go-to source for fast, verified answers and design help — straight from the experts. Search existing answers or ask your own question to get the quick design help you need.

Linked content is provided "AS IS" by the respective contributors. They do not constitute TI specifications and do not necessarily reflect TI's views; see TI's Terms of Use.

9.4 Trademarks

I2C™ is a trademark of I2C Technologies, Ltd.
TI E2E™ is a trademark of Texas Instruments.
All trademarks are the property of their respective owners.

9.5 Electrostatic Discharge Caution



This integrated circuit can be damaged by ESD. Texas Instruments recommends that all integrated circuits be handled with appropriate precautions. Failure to observe proper handling and installation procedures can cause damage.

ESD damage can range from subtle performance degradation to complete device failure. Precision integrated circuits may be more susceptible to damage because very small parametric changes could cause the device not to meet its published specifications.

9.6 Glossary

TI Glossary	This glossary lists and explains terms, acronyms, and definitions.

10 Revision History

NOTE: Page numbers for previous revisions may differ from page numbers in the current version.

Changes from Revision B (September 2024) to Revision C (August 2026)	Page
• Updated instances of legacy terminology to "Controller" and "Target" throughout the document	1
• Updated the *Register Set Summary* table in the *Register Maps* section to include the new material binary and hex values	22

Changes from Revision A (May 2020) to Revision B (September 2024)	Page
• Updated the numbering format for tables, figures, and cross-references throughout the document	1
• Updated the number formatting for tables, figures, and cross-references throughout the document	1
• Updated thermal metric values to match thermal model	4
• Added ± in front of typical values for PSRR specifications	5
• Decreased input bias current typical value	5
• Updated *Shunt Input Gain Error vs Common-Mode Voltage* graph and Input Bias current curves	7

Copyright © 2026 Texas Instruments Incorporated

Changes from Revision * (July 2015) to Revision A (May 2020)	Page
• Added Functional Safety-Capable information	1
• Changed *Alert Response* curves in the *Typical Applications* section to accurately reflect device behavior	30

11 Mechanical, Packaging, and Orderable Information

The following pages include mechanical, packaging, and orderable information. This information is the most current data available for the designated devices. This data is subject to change without notice and revision of this document. For browser-based versions of this data sheet, refer to the left-hand navigation.

Copyright © 2026 Texas Instruments Incorporated

PACKAGING INFORMATION

Orderable part number	Status (1)	Material type (2)	Package | Pins	Package qty | Carrier	RoHS (3)	Lead finish/ Ball material (4)	MSL rating/ Peak reflow (5)	Op temp (°C)	Part marking (6)
INA226AQDGSRQ1	Active	Production	VSSOP (DGS) | 10	2500 | LARGE T&R	Yes	NIPDAU | NIPDAUAG	Level-2-260C-1 YEAR	-40 to 125	226Q
INA226AQDGSRQ1.A	Active	Production	VSSOP (DGS) | 10	2500 | LARGE T&R	Yes	NIPDAU	Level-2-260C-1 YEAR	-40 to 125	226Q

(1) **Status:** For more details on status, see our product life cycle.

(2) **Material type:** When designated, preproduction parts are prototypes/experimental devices, and are not yet approved or released for full production. Testing and final process, including without limitation quality assurance, reliability performance testing, and/or process qualification, may not yet be complete, and this item is subject to further changes or possible discontinuation. If available for ordering, purchases will be subject to an additional waiver at checkout, and are intended for early internal evaluation purposes only. These items are sold without warranties of any kind.

(3) **RoHS values:** Yes, No, RoHS Exempt. See the TI RoHS Statement for additional information and value definition.

(4) **Lead finish/Ball material:** Parts may have multiple material finish options. Finish options are separated by a vertical ruled line. Lead finish/Ball material values may wrap to two lines if the finish value exceeds the maximum column width.

(5) **MSL rating/Peak reflow:** The moisture sensitivity level ratings and peak solder (reflow) temperatures. In the event that a part has multiple moisture sensitivity ratings, only the lowest level per JEDEC standards is shown. Refer to the shipping label for the actual reflow temperature that will be used to mount the part to the printed circuit board.

(6) **Part marking:** There may be an additional marking, which relates to the logo, the lot trace code information, or the environmental category of the part.

Multiple part markings will be inside parentheses. Only one part marking contained in parentheses and separated by a "~" will appear on a part. If a line is indented then it is a continuation of the previous line and the two combined represent the entire part marking for that device.

Important Information and Disclaimer: The information provided on this page represents TI's knowledge and belief as of the date that it is provided. TI bases its knowledge and belief on information provided by third parties, and makes no representation or warranty as to the accuracy of such information. Efforts are underway to better integrate information from third parties. TI has taken and continues to take reasonable steps to provide representative and accurate information but may not have conducted destructive testing or chemical analysis on incoming materials and chemicals. TI and TI suppliers consider certain information to be proprietary, and thus CAS numbers and other limited information may not be available for release.

In no event shall TI's liability arising out of such information exceed the total purchase price of the TI part(s) at issue in this document sold by TI to Customer on an annual basis.

OTHER QUALIFIED VERSIONS OF INA226-Q1 :

- Catalog : INA226

NOTE: Qualified Version Definitions:

- Catalog - TI's standard catalog product

TAPE AND REEL INFORMATION

REEL DIMENSIONS

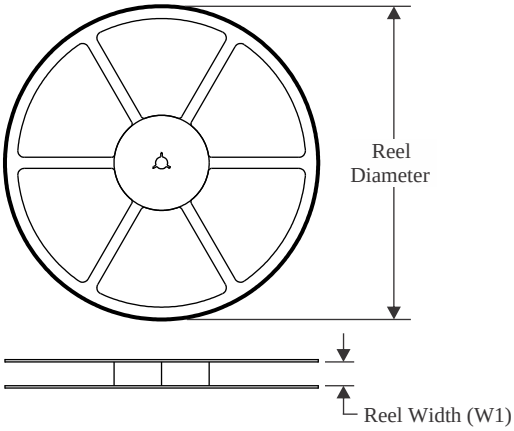

TAPE DIMENSIONS

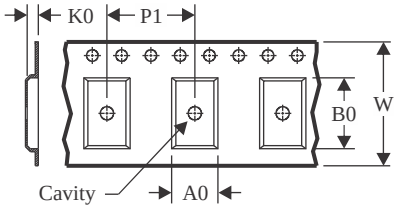

A0	Dimension designed to accommodate the component width
B0	Dimension designed to accommodate the component length
K0	Dimension designed to accommodate the component thickness
W	Overall width of the carrier tape
P1	Pitch between successive cavity centers

QUADRANT ASSIGNMENTS FOR PIN 1 ORIENTATION IN TAPE

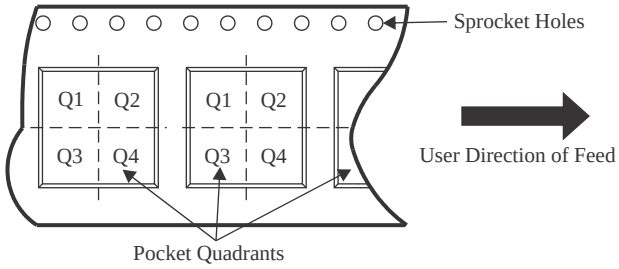

*All dimensions are nominal

Device	Package Type	Package Drawing	Pins	SPQ	Reel Diameter (mm)	Reel Width W1 (mm)	A0 (mm)	B0 (mm)	K0 (mm)	P1 (mm)	W (mm)	Pin1 Quadrant
INA226AQDGSRQ1	VSSOP	DGS	10	2500	330.0	12.4	5.3	3.4	1.4	8.0	12.0	Q1
INA226AQDGSRQ1	VSSOP	DGS	10	2500	330.0	12.4	5.3	3.4	1.4	8.0	12.0	Q1

TAPE AND REEL BOX DIMENSIONS

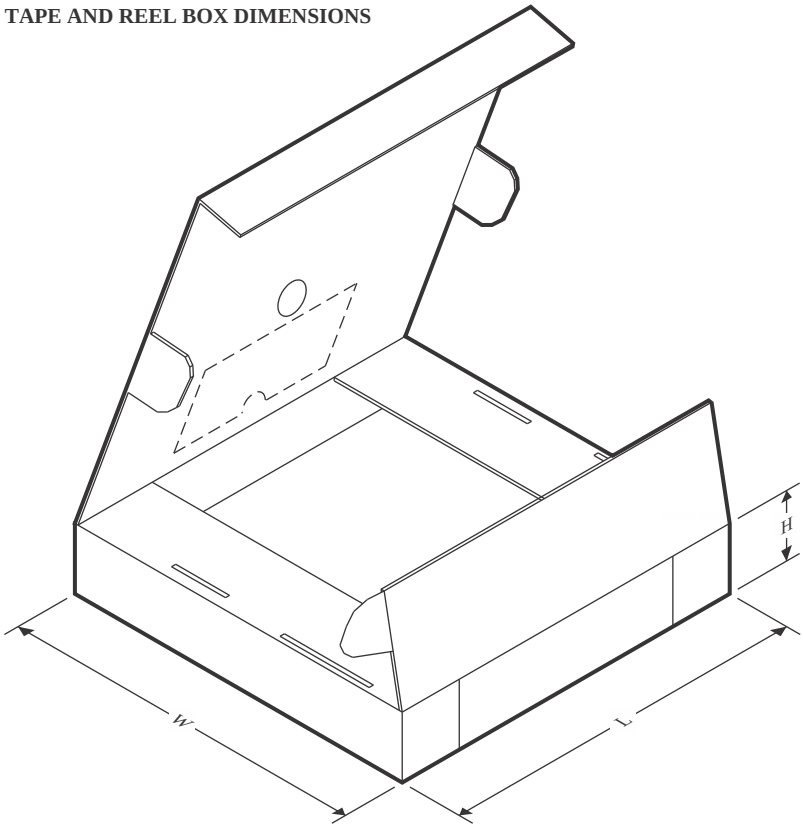

*All dimensions are nominal

Device	Package Type	Package Drawing	Pins	SPQ	Length (mm)	Width (mm)	Height (mm)
INA226AQDGSRQ1	VSSOP	DGS	10	2500	366.0	364.0	50.0
INA226AQDGSRQ1	VSSOP	DGS	10	2500	353.0	353.0	32.0

PACKAGE OUTLINE

DGS0010A

VSSOP - 1.1 mm max height

SMALL OUTLINE PACKAGE

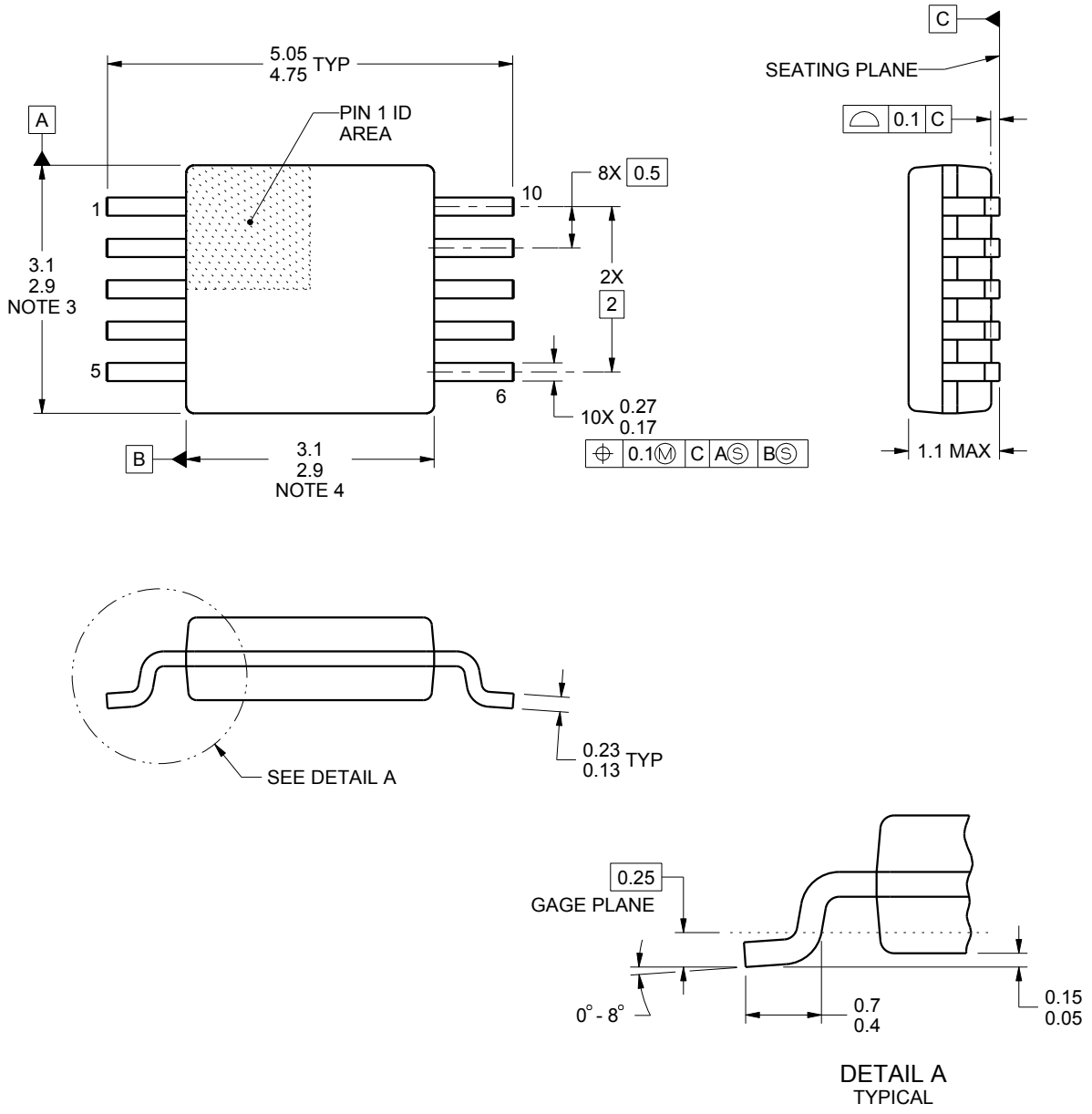

NOTES:

1. All linear dimensions are in millimeters. Any dimensions in parenthesis are for reference only. Dimensioning and tolerancing per ASME Y14.5M.
2. This drawing is subject to change without notice.
3. This dimension does not include mold flash, protrusions, or gate burrs. Mold flash, protrusions, or gate burrs shall not exceed 0.15 mm per side.
4. This dimension does not include interlead flash. Interlead flash shall not exceed 0.25 mm per side.
5. Reference JEDEC registration MO-187, variation BA.

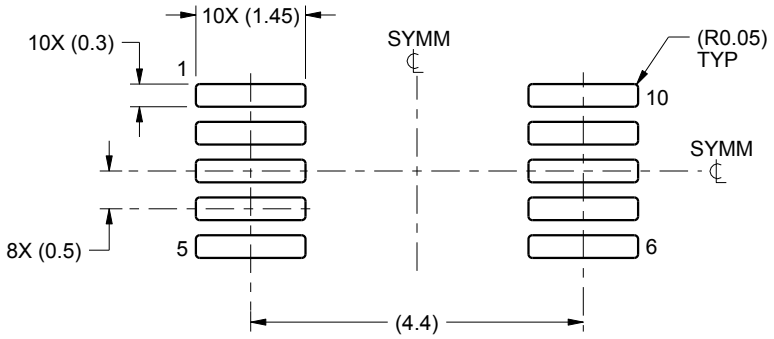

LAND PATTERN EXAMPLE
SCALE:10X

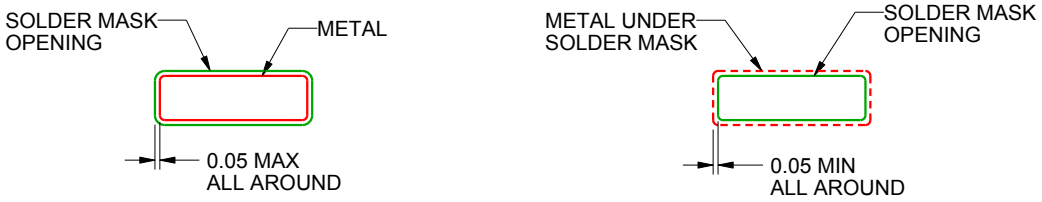

SOLDER MASK DETAILS
NOT TO SCALE

4221984/A 05/2015

NOTES: (continued)

6. Publication IPC-7351 may have alternate designs.
7. Solder mask tolerances between and around signal pads can vary based on board fabrication site.

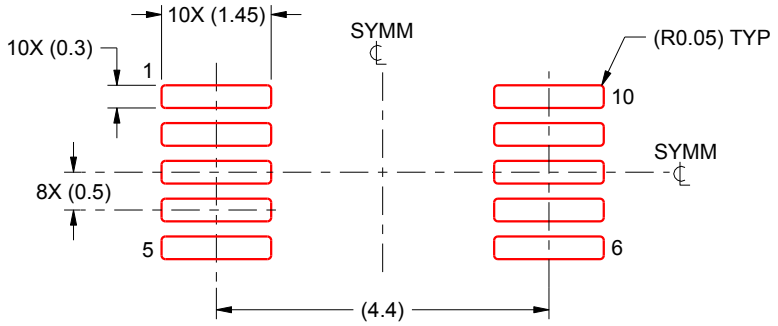

SOLDER PASTE EXAMPLE
BASED ON 0.125 mm THICK STENCIL
SCALE:10X

4221984/A 05/2015

NOTES: (continued)

8. Laser cutting apertures with trapezoidal walls and rounded corners may offer better paste release. IPC-7525 may have alternate design recommendations.
9. Board assembly site may have different recommendations for stencil design.

IMPORTANT NOTICE AND DISCLAIMER

TI PROVIDES TECHNICAL AND RELIABILITY DATA (INCLUDING DATASHEETS), DESIGN RESOURCES (INCLUDING REFERENCE DESIGNS), APPLICATION OR OTHER DESIGN ADVICE, WEB TOOLS, SAFETY INFORMATION, AND OTHER RESOURCES “AS IS” AND WITH ALL FAULTS, AND DISCLAIMS ALL WARRANTIES, EXPRESS AND IMPLIED, INCLUDING WITHOUT LIMITATION ANY IMPLIED WARRANTIES OF MERCHANTABILITY, FITNESS FOR A PARTICULAR PURPOSE OR NON-INFRINGEMENT OF THIRD PARTY INTELLECTUAL PROPERTY RIGHTS.

These resources are intended for skilled developers designing with TI products. You are solely responsible for (1) selecting the appropriate TI products for your application, (2) designing, validating and testing your application, and (3) ensuring your application meets applicable standards, and any other safety, security, regulatory or other requirements.

These resources are subject to change without notice. TI grants you permission to use these resources only for development of an application that uses the TI products described in the resource. Other reproduction and display of these resources is prohibited. No license is granted to any other TI intellectual property right or to any third party intellectual property right. TI disclaims responsibility for, and you fully indemnify TI and its representatives against any claims, damages, costs, losses, and liabilities arising out of your use of these resources.

TI’s products are provided subject to TI’s Terms of Sale, TI’s General Quality Guidelines, or other applicable terms available either on ti.com or provided in conjunction with such TI products. TI’s provision of these resources does not expand or otherwise alter TI’s applicable warranties or warranty disclaimers for TI products. Unless TI explicitly designates a product as custom or customer-specified, TI products are standard, catalog, general purpose devices.

TI objects to and rejects any additional or different terms you may propose.

Copyright © 2026, Texas Instruments Incorporated

Last updated 10/2025

ENTEGRECİ

Bu belge www.entegreci.com üzerinden sunulmaktadır.

Elektronik komponent tedarikinde Entegreci

Entegreci, Eskişehir merkezli, Türkiye geneline satış yapan bir elektronik komponent mağazasıdır. Entegreler (IC), mikrodenetleyiciler, transistörler, diyotlar, pasif elemanlar, konnektörler, modüller ve geliştirme kartları tek adetten seri üretim adetlerine kadar satılır. Ürün sayfalarında güncel stok durumunu, fiyatı ve datasheet bağlantısını bulabilirsiniz.

Parça koduyla arama

Üretici parça numarasını yazın; stok ve fiyatı hemen görün.

www.entegreci.com

Ürün kategorileri

Entegreden kapasitöre tüm elektronik komponent kategorileri.

Kategorilere göz atın

Üreticiler

Aradığınız üreticinin ürünlerini tek sayfada inceleyin.

Üreticileri görün

Toplu alım ve teklif

Listede olmayan ya da yüksek adetli parçalar için teklif isteyin.

Teklif isteyin

www.entegreci.com | **destek@entegreci.com** | **0850 305 90 34**

Entegreci is an online electronic components store based in Türkiye. Search by manufacturer part number to see stock, prices and datasheets for integrated circuits, microcontrollers, transistors, passive components and connectors, or request a quote for parts that are not listed.

Bu sayfa Entegreci tarafından eklenmiştir. Belgenin önceki sayfaları asıl yayıncısına aittir ve içeriği değiştirilmemiştir; en güncel sürüm için belgenin yayıncısına başvurun.