ON Semiconductor

Is Now



To learn more about onsemi™, please visit our website at
www.onsemi.com

onsemi and onsemi and other names, marks, and brands are registered and/or common law trademarks of Semiconductor Components Industries, LLC dba "**onsemi**" or its affiliates and/or subsidiaries in the United States and/or other countries. **onsemi** owns the rights to a number of patents, trademarks, copyrights, trade secrets, and other intellectual property. A listing of **onsemi** product/patent coverage may be accessed at www.onsemi.com/site/pdf/Patent-Marking.pdf. **onsemi** reserves the right to make changes at any time to any products or information herein, without notice. The information herein is provided "as-is" and **onsemi** makes no warranty, representation or guarantee regarding the accuracy of the information, product features, availability, functionality, or suitability of its products for any particular purpose, nor does **onsemi** assume any liability arising out of the application or use of any product or circuit, and specifically disclaims any and all liability, including without limitation special, consequential or incidental damages. Buyer is responsible for its products and applications using **onsemi** products, including compliance with all laws, regulations and safety requirements or standards, regardless of any support or applications information provided by **onsemi**. "Typical" parameters which may be provided in **onsemi** data sheets and/or specifications can and do vary in different applications and actual performance may vary over time. All operating parameters, including "Typicals" must be validated for each customer application by customer's technical experts. **onsemi** does not convey any license under any of its intellectual property rights nor the rights of others. **onsemi** products are not designed, intended, or authorized for use as a critical component in life support systems or any FDA Class 3 medical devices or medical devices with a same or similar classification in a foreign jurisdiction or any devices intended for implantation in the human body. Should Buyer purchase or use **onsemi** products for any such unintended or unauthorized application, Buyer shall indemnify and hold **onsemi** and its officers, employees, subsidiaries, affiliates, and distributors harmless against all claims, costs, damages, and expenses, and reasonable attorney fees arising out of, directly or indirectly, any claim of personal injury or death associated with such unintended or unauthorized use, even if such claim alleges that **onsemi** was negligent regarding the design or manufacture of the part. **onsemi** is an Equal Opportunity/Affirmative Action Employer. This literature is subject to all applicable copyright laws and is not for resale in any manner. Other names and brands may be claimed as the property of others.

ON Semiconductor®

HUFA75639S3ST-F085A

56A, 100V, 0.025 Ohm, N-Channel UltraFET Power MOSFETs

These N-Channel power MOSFETs are manufactured using the innovative UltraFET® process. This advanced process technology achieves the lowest possible on-resistance per silicon area, resulting in outstanding performance. This device is capable of withstanding high energy in the avalanche mode and the diode exhibits very low reverse recovery time and stored charge. It was designed for use in applications where power efficiency is important, such as switching regulators, switching converters, motor drivers, relay drivers, low-voltage bus switches, and power management in portable and battery-operated products.

Features

- 56A, 100V
- Peak Current vs Pulse Width Curve
- UIS Rating Curve
- Related Literature
  - TB334, “Guidelines for Soldering Surface Mount Components to PC Boards”

Symbol

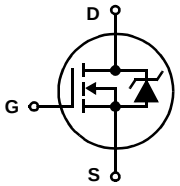

Ordering Information

PART NUMBER	PACKAGE	BRAND
HUFA75639S3ST-F085A	TO263AB	75639S

NOTE: When ordering, use the entire part number. Add the suffix T to obtain the TO-263AB variant in tape and reel, e.g., HUFA75639S3ST.

Packaging

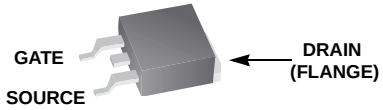

JEDEC TO-263AB

©2012 Semiconductor Components Industries, LLC.
August-2017, Rev. 3

Publication Order Number:
HUFA75639S3ST-F085A/D

Absolute Maximum Ratings $T_C = 25^oC$, Unless Otherwise Specified

			UNITS
Drain to Source Voltage (Note 1)	V_{DSS}	100	V
Drain to Gate Voltage (R_{GS} = 20kΩ) (Note 1)	V_{DGR}	100	V
Gate to Source Voltage	V_{GS}	±20	V
Drain Current			
Continuous (Figure 2)	I_D	56	A
Pulsed Drain Current	I_{DM}	Figure 4	
Pulsed Avalanche Rating	E_{AS}	Figures 6, 14, 15	
Power Dissipation	P_D	200	W
Derate Above 25^oC		1.35	$W/^oC$
Operating and Storage Temperature	T_J, T_{STG}	-55 to 175	^oC
Maximum Temperature for Soldering			
Leads at 0.063in (1.6mm) from Case for 10s	T_L	300	^oC
Package Body for 10s, See Techbrief 334	T_{pkg}	260	^oC

CAUTION: Stresses above those listed in "Absolute Maximum Ratings" may cause permanent damage to the device. This is a stress only rating and operation of the device at these or any other conditions above those indicated in the operational sections of this specification is not implied.

NOTE:

1. $T_J = 25^oC$ to 150^oC.

Electrical Specifications $T_C = 25^oC$, Unless Otherwise Specified

PARAMETER	SYMBOL	TEST CONDITIONS		MIN	TYP	MAX	UNITS
OFF STATE SPECIFICATIONS							
Drain to Source Breakdown Voltage	BV_{DSS}	I_D = 250μA, V_{GS} = 0V (Figure 11)		100	-	-	V
Zero Gate Voltage Drain Current	I_{DSS}	V_{DS} = 95V, V_{GS} = 0V		-	-	1	μA
		V_{DS} = 90V, V_{GS} = 0V, $T_C = 150^oC$		-	-	250	μA
Gate to Source Leakage Current	I_{GSS}	V_{GS} = ±20V		-	-	±100	nA
ON STATE SPECIFICATIONS							
Gate to Source Threshold Voltage	$V_{GS(TH)}$	V_{GS} = V_{DS}, I_D = 250μA (Figure 10)		2	-	4	V
Drain to Source On Resistance	$r_{DS(ON)}$	I_D = 56A, V_{GS} = 10V (Figure 9)		-	0.021	0.025	Ω
THERMAL SPECIFICATIONS							
Thermal Resistance Junction to Case	$R_{\theta JC}$	(Figure 3)		-	-	0.74	$^oC/W$
Thermal Resistance Junction to Ambient	$R_{\theta JA}$	TO-247		-	-	30	$^oC/W$
		TO-220, TO-263		-	-	62	$^oC/W$
SWITCHING SPECIFICATIONS (V_{GS} = 10V)							
Turn-On Time	t_{ON}	V_{DD} = 50V, $I_D \cong$ 56A, R_L = 0.89Ω, V_{GS} = 10V, R_{GS} = 5.1Ω		-	-	110	ns
Turn-On Delay Time	$t_{d(ON)}$			-	15	-	ns
Rise Time	t_r			-	60	-	ns
Turn-Off Delay Time	$t_{d(OFF)}$			-	20	-	ns
Fall Time	t_f			-	25	-	ns
Turn-Off Time	t_{OFF}			-	-	70	ns
GATE CHARGE SPECIFICATIONS							
Total Gate Charge	$Q_{g(TOT)}$	V_{GS} = 0V to 20V	V_{DD} = 50V, $I_D \cong$ 56A, R_L = 0.89Ω $I_{g(REF)}$ = 1.0mA (Figure 13)	-	110	130	nC
Gate Charge at 10V	$Q_{g(10)}$	V_{GS} = 0V to 10V		-	57	75	nC
Threshold Gate Charge	$Q_{g(TH)}$	V_{GS} = 0V to 2V		-	3.7	4.5	nC
Gate to Source Gate Charge	Q_{gs}			-	9.8	-	nC
Gate to Drain "Miller" Charge	Q_{gd}			-	24	-	nC

Electrical Specifications $T_C = 25^oC$, Unless Otherwise Specified

PARAMETER	SYMBOL	TEST CONDITIONS	MIN	TYP	MAX	UNITS
CAPACITANCE SPECIFICATIONS						
Input Capacitance	C_{ISS}	V_{DS} = 25V, V_{GS} = 0V, f = 1MHz (Figure 12)	-	2000	-	pF
Output Capacitance	C_{OSS}		-	500	-	pF
Reverse Transfer Capacitance	C_{RSS}		-	65	-	pF

Source to Drain Diode Specifications

PARAMETER	SYMBOL	TEST CONDITIONS	MIN	TYP	MAX	UNITS
Source to Drain Diode Voltage	V_{SD}	I_{SD} = 56A	-	-	1.25	V
Reverse Recovery Time	t_{rr}	I_{SD} = 56A, dI_{SD}/dt = 100A/μs	-	-	110	ns
Reverse Recovered Charge	Q_{RR}	I_{SD} = 56A, dI_{SD}/dt = 100A/μs	-	-	320	nC

Typical Performance Curves

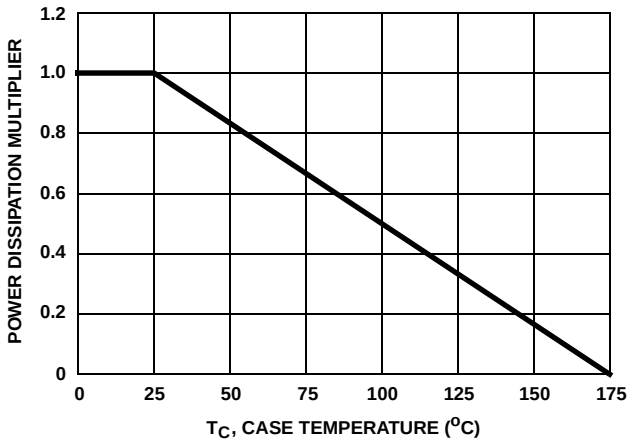

FIGURE 1. NORMALIZED POWER DISSIPATION vs CASE TEMPERATURE

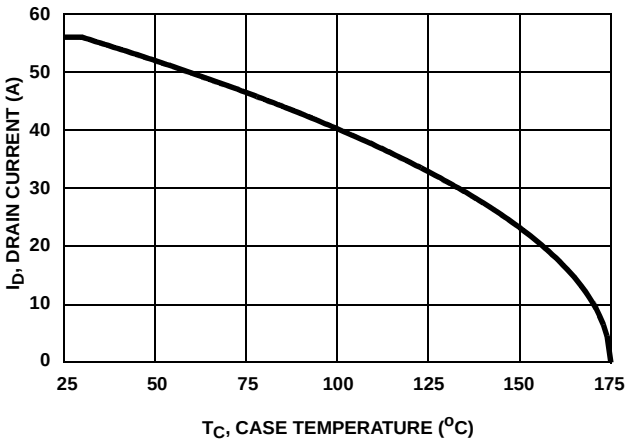

FIGURE 2. MAXIMUM CONTINUOUS DRAIN CURRENT vs CASE TEMPERATURE

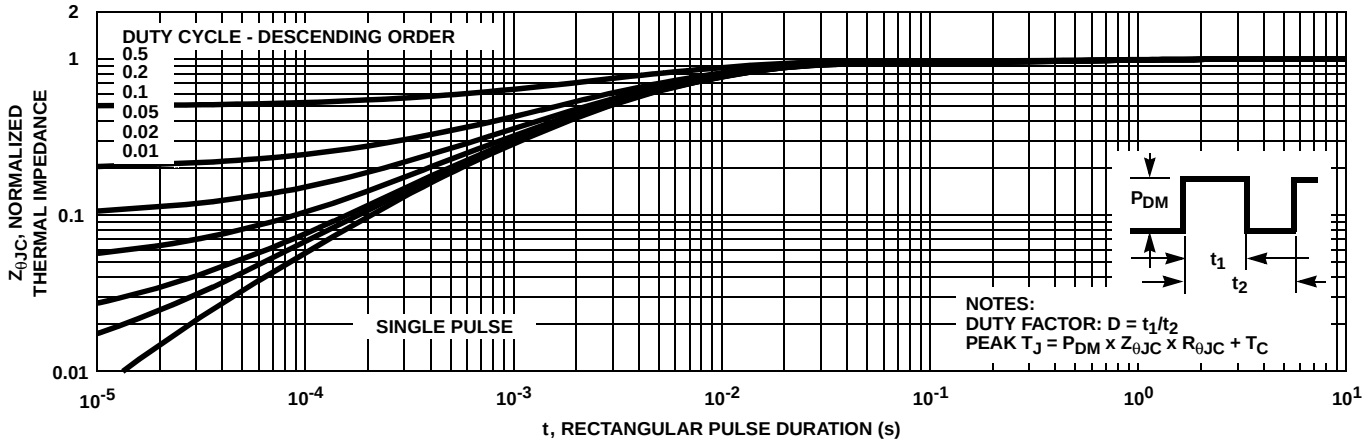

FIGURE 3. NORMALIZED MAXIMUM TRANSIENT THERMAL IMPEDANCE

Typical Performance Curves (Continued)

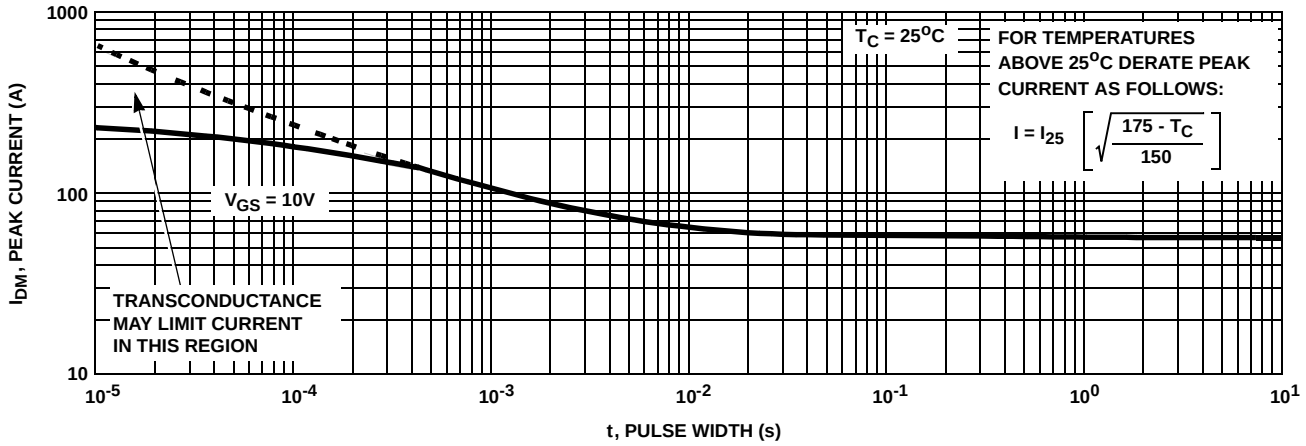

FIGURE 4. PEAK CURRENT CAPABILITY

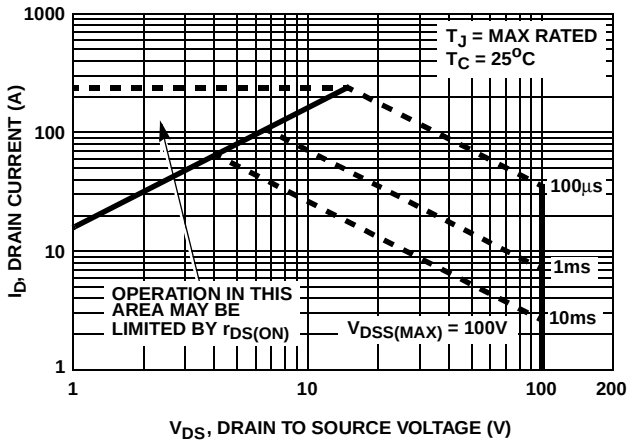

FIGURE 5. FORWARD BIAS SAFE OPERATING AREA

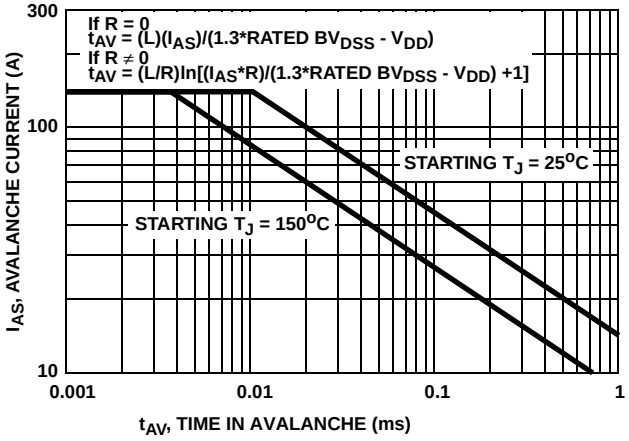

NOTE: Refer to ON Semiconductor Application Notes AN9321 and AN9322.

FIGURE 6. UNCLAMPED INDUCTIVE SWITCHING CAPABILITY

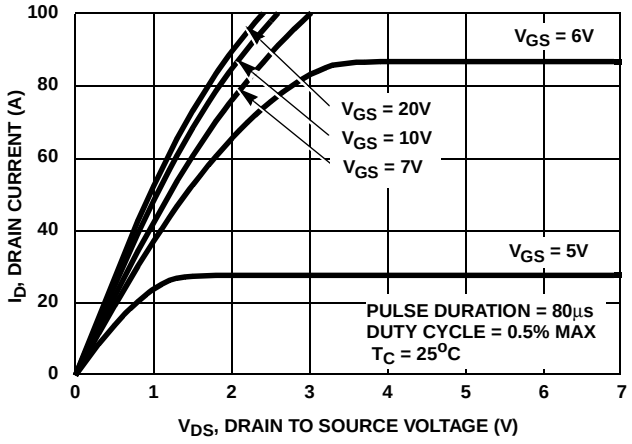

FIGURE 7. SATURATION CHARACTERISTICS

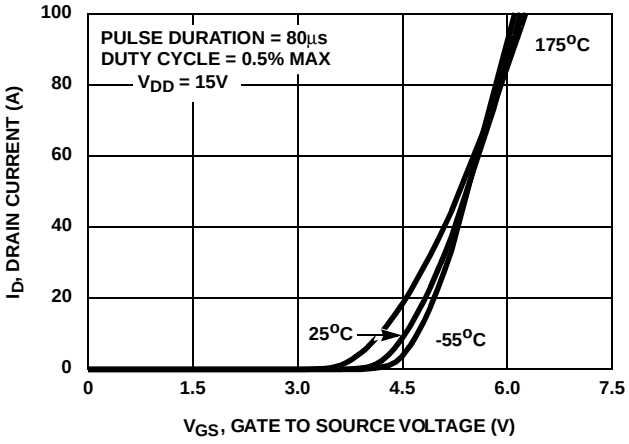

FIGURE 8. TRANSFER CHARACTERISTICS

Typical Performance Curves (Continued)

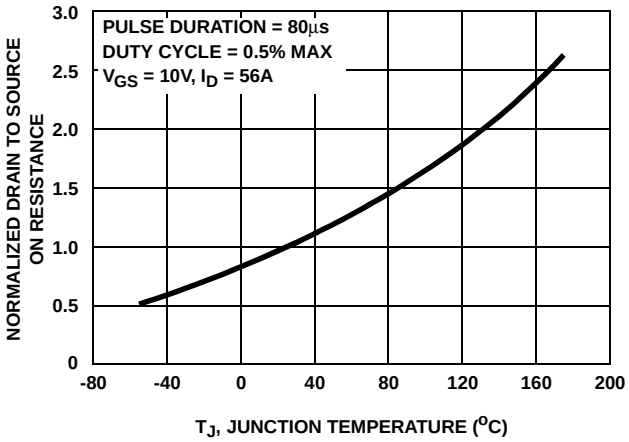

FIGURE 9. NORMALIZED DRAIN TO SOURCE ON RESISTANCE vs JUNCTION TEMPERATURE

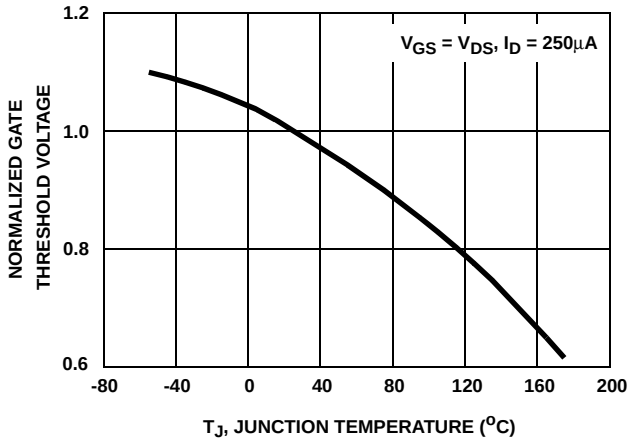

FIGURE 10. NORMALIZED GATE THRESHOLD VOLTAGE vs JUNCTION TEMPERATURE

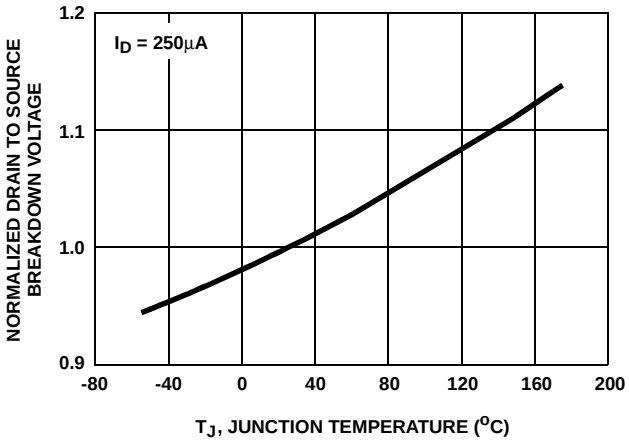

FIGURE 11. NORMALIZED DRAIN TO SOURCE BREAKDOWN VOLTAGE vs JUNCTION TEMPERATURE

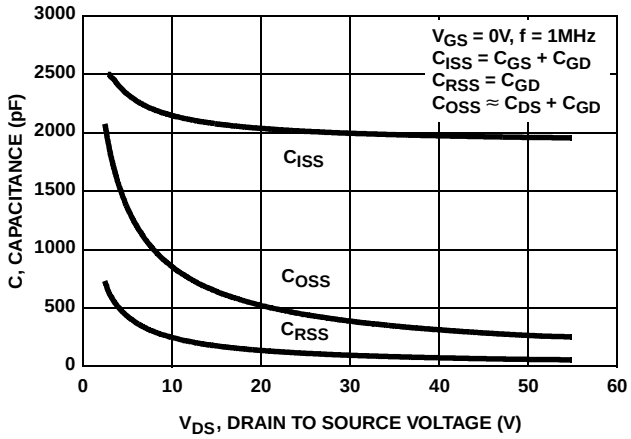

FIGURE 12. CAPACITANCE vs DRAIN TO SOURCE VOLTAGE

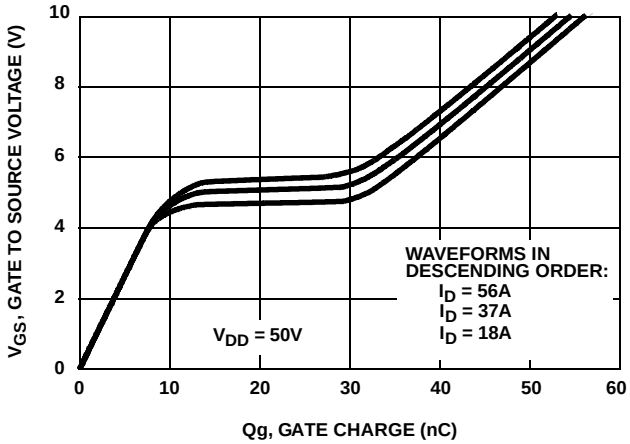

NOTE: Refer to ON Semiconductor Application Notes AN7254 and AN7260.

FIGURE 13. GATE CHARGE WAVEFORMS FOR CONSTANT GATE CURRENT

Test Circuits and Waveforms

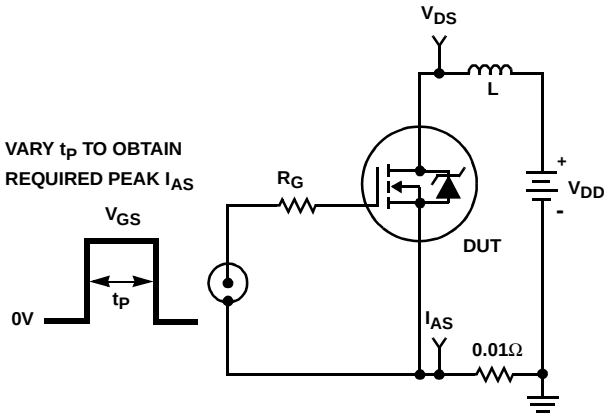

FIGURE 14. UNCLAMPED ENERGY TEST CIRCUIT

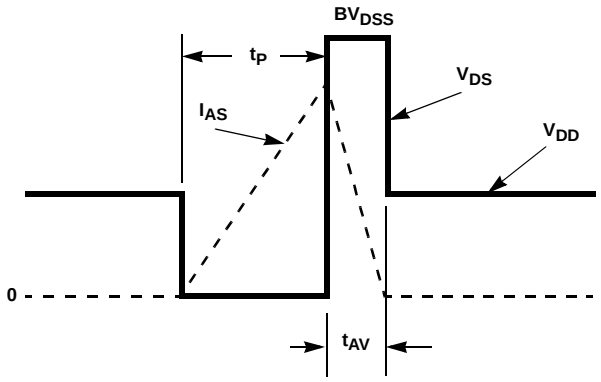

FIGURE 15. UNCLAMPED ENERGY WAVEFORMS

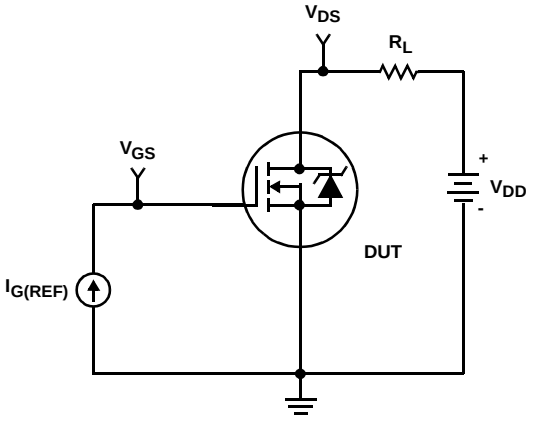

FIGURE 16. GATE CHARGE TEST CIRCUIT

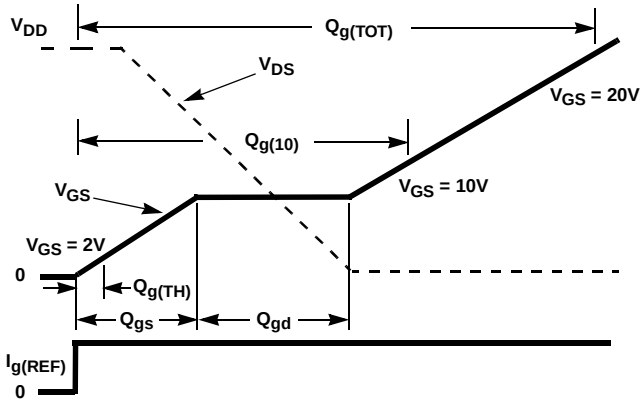

FIGURE 17. GATE CHARGE WAVEFORM

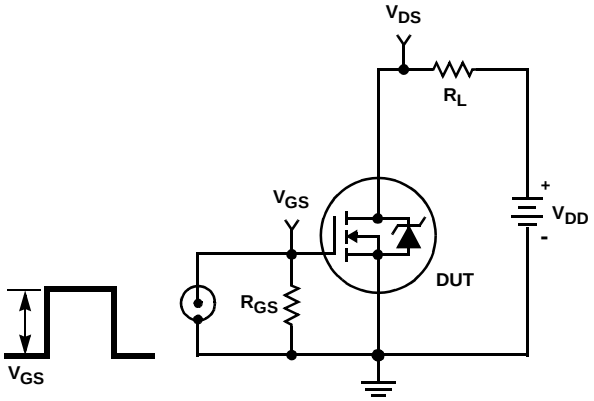

FIGURE 18. SWITCHING TIME TEST CIRCUIT

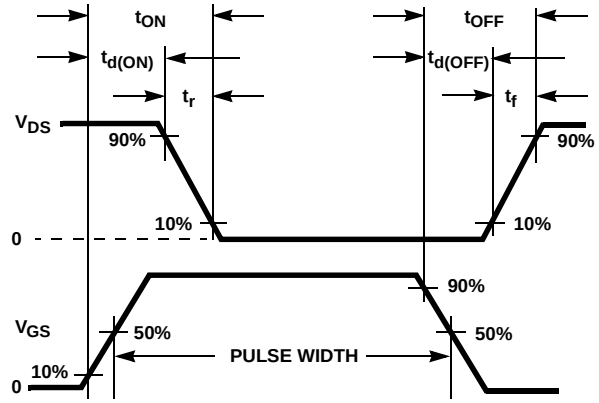

FIGURE 19. RESISTIVE SWITCHING WAVEFORMS

ON Semiconductor and ON are trademarks of Semiconductor Components Industries, LLC dba ON Semiconductor or its subsidiaries in the United States and/or other countries. ON Semiconductor owns the rights to a number of patents, trademarks, copyrights, trade secrets, and other intellectual property. A listing of ON Semiconductor's product/patent coverage may be accessed at www.onsemi.com/site/pdf/Patent−Marking.pdf. ON Semiconductor reserves the right to make changes without further notice to any products herein. ON Semiconductor makes no warranty, representation or guarantee regarding the suitability of its products for any particular purpose, nor does ON Semiconductor assume any liability arising out of the application or use of any product or circuit, and specifically disclaims any and all liability, including without limitation special, consequential or incidental damages. Buyer is responsible for its products and applications using ON Semiconductor products, including compliance with all laws, regulations and safety requirements or standards, regardless of any support or applications information provided by ON Semiconductor. "Typical" parameters which may be provided in ON Semiconductor data sheets and/or specifications can and do vary in different applications and actual performance may vary over time. All operating parameters, including "Typicals" must be validated for each customer application by customer's technical experts. ON Semiconductor does not convey any license under its patent rights nor the rights of others. ON Semiconductor products are not designed, intended, or authorized for use as a critical component in life support systems or any FDA Class 3 medical devices or medical devices with a same or similar classification in a foreign jurisdiction or any devices intended for implantation in the human body. Should Buyer purchase or use ON Semiconductor products for any such unintended or unauthorized application, Buyer shall indemnify and hold ON Semiconductor and its officers, employees, subsidiaries, affiliates, and distributors harmless against all claims, costs, damages, and expenses, and reasonable attorney fees arising out of, directly or indirectly, any claim of personal injury or death associated with such unintended or unauthorized use, even if such claim alleges that ON Semiconductor was negligent regarding the design or manufacture of the part. ON Semiconductor is an Equal Opportunity/Affirmative Action Employer. This literature is subject to all applicable copyright laws and is not for resale in any manner.

PUBLICATION ORDERING INFORMATION

LITERATURE FULFILLMENT:
Literature Distribution Center for ON Semiconductor
19521 E. 32nd Pkwy, Aurora, Colorado 80011 USA
Phone: 303−675−2175 or 800−344−3860 Toll Free USA/Canada
Fax: 303−675−2176 or 800−344−3867 Toll Free USA/Canada
Email: orderlit@onsemi.com

N. American Technical Support: 800−282−9855 Toll Free USA/Canada
Europe, Middle East and Africa Technical Support:
Phone: 421 33 790 2910
Japan Customer Focus Center
Phone: 81−3−5817−1050

ON Semiconductor Website: **www.onsemi.com**

Order Literature: http://www.onsemi.com/orderlit

For additional information, please contact your local Sales Representative

© Semiconductor Components Industries, LLC

ENTEGRECİ

Bu belge www.entegreci.com üzerinden sunulmaktadır.

Elektronik komponent tedarikinde Entegreci

Entegreci, Eskişehir merkezli, Türkiye geneline satış yapan bir elektronik komponent mağazasıdır. Entegreler (IC), mikrodenetleyiciler, transistörler, diyotlar, pasif elemanlar, konnektörler, modüller ve geliştirme kartları tek adetten seri üretim adetlerine kadar satılır. Ürün sayfalarında güncel stok durumunu, fiyatı ve datasheet bağlantısını bulabilirsiniz.

Parça koduyla arama

Üretici parça numarasını yazın; stok ve fiyatı hemen görün.

www.entegreci.com

Ürün kategorileri

Entegreden kapasitöre tüm elektronik komponent kategorileri.

Kategorilere göz atın

Üreticiler

Aradığınız üreticinin ürünlerini tek sayfada inceleyin.

Üreticileri görün

Toplu alım ve teklif

Listede olmayan ya da yüksek adetli parçalar için teklif isteyin.

Teklif isteyin

www.entegreci.com | **destek@entegreci.com** | **0850 305 90 34**

Entegreci is an online electronic components store based in Türkiye. Search by manufacturer part number to see stock, prices and datasheets for integrated circuits, microcontrollers, transistors, passive components and connectors, or request a quote for parts that are not listed.

Bu sayfa Entegreci tarafından eklenmiştir. Belgenin önceki sayfaları asıl yayıncısına aittir ve içeriği değiştirilmemiştir; en güncel sürüm için belgenin yayıncısına başvurun.