Green Mode Power Switch

FSL206MR

Description

The FSL206MR integrated Pulse−Width Modulator (PWM) and SENSEFET® is specifically designed for high−performance offline Switched−Mode Power Supplies (SMPS) while minimizing external components. This device integrates high−voltage power regulators that combine an avalanche−rugged SENSEFET with a Current−Mode PWM control block.

The integrated PWM controller includes: a 7.8 V regulator, eliminating the need for auxiliary bias winding; Under−Voltage Lockout (UVLO) protection; Leading−Edge Blanking (LEB); an optimized gate turn−on/turn−off driver; EMI attenuator; Thermal Shutdown (TSD) protection; temperature−compensated precision current sources for loop compensation; soft−start during startup; and fault−protection circuitry such as Overload Protection (OLP), Over−Voltage Protection (OVP), Abnormal Over−Current Protection (AOCP), and Line Under−Voltage Protection (LUVP).

The internal high−voltage startup switch and the Burst−Mode operation with very low operating current reduce the power loss in Standby Mode. As a result, it is possible to reach a power loss of 150 mW with no bias winding and 25 mW (for FSL206MR) or 30 mW (for FSL206MRBN) with a bias winding under no−load conditions when the input voltage is 265 Vac.

Features

- Internal Avalanche−Rugged SENSEFET 650 V
- Precision Fixed Operating Frequency: 67 kHz
- No−Load < 150 mW at 265 Vac without Bias Winding; <25 mW with Bias Winding for FSL206MR, < 30 mW with Bias Winding for FSL206MRBN
- No Need for Auxiliary Bias Winding
- Frequency Modulation for Attenuating EMI
- Line Under−Voltage Protection (LUVP)
- Pulse−by−Pulse Current Limiting
- Low Under−Voltage Lockout (UVLO)
- Ultra−Low Operating Current: 300 μA
- Built−In Soft−Start and Startup Circuit
- Various Protections: Overload Protection (OLP), Over−Voltage Protection (OVP), Thermal Shutdown (TSD), Abnormal Over−Current Protection (AOCP) Auto−Restart Mode for All Protections

Applications

- SMPS for STB, DVD & DVCD Players
- SMPS for Auxiliary Power

Related Resources

- https://www.onsemi.com/PowerSolutions/home.do
- https://www.onsemi.com/pub/Collateral/AN−4137.pdf.pdf
- https://www.onsemi.com/pub/Collateral/AN−4141.pdf.pdf
- https://www.onsemi.com/pub/Collateral/AN−4150.pdf.pdf

ON Semiconductor®

www.onsemi.com

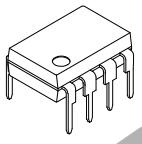

PDIP8 9.42x6.38, 2.54P
CASE 646CM

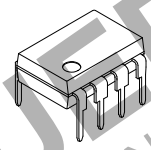

PDIP8 9.59x6.6, 2.54P
CASE 646CN

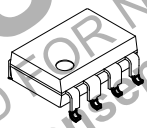

PDIP8 GW
CASE 709AJ

DISCONTINUED
THIS DEVICE IS NOT RECOMMENDED FOR NEW DESIGN
PLEASE CONTACT YOUR onsemi
REPRESENTATIVE FOR INFORMATION

MARKING DIAGRAM

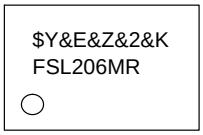

$Y	= ON Semiconductor Logo
&E	= Designated Space
&Z	= Assembly Plant Code
&2	= 2−Digit Date code format
&K	= 2−Digits Lot Run Traceability Code
FSL206MR	= Specific Device Code Data

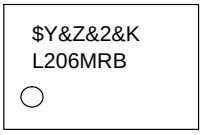

$Y	= ON Semiconductor Logo
&Z	= Assembly Plant Code
&2	= 2−Digit Date code format
&K	= 2−Digits Lot Run Traceability Code
L206MRB	= Specific Device Code Data

ORDERING INFORMATION

See detailed ordering and shipping information on page 2 of this data sheet.

© Semiconductor Components Industries, LLC, 2018

ORDERING INFORMATION

Part Number	Operating Temperature	Top Mark	PKG	Packing Method	Output Power Table (Note 1)			
					Current Limit	$R_{DS(ON),MAX}$	230 Vac ±15% (Note 2)	85 ~265 Vac
							Open Frame (Note 3)	Open Frame (Note 3)
FSL206MRN	−40 ~ 115°C	FSL206MR	8−DIP	Tube	0.6 A	19 Ω	12 W	7 W
FSL206MRBN		L206MRB						
FSL206MRL		FSL206MR	8−LSOP	Tube				
FSL206MRLX				Tape & Reel				

1. The junction temperature can limit the maximum output power.
2. 230 Vac or 100/115 Vac with doubler. The maximum power with CCM operation.
3. Maximum practical continuous power in an open−frame design at 50°C ambient.

APPLICATION DIAGRAM

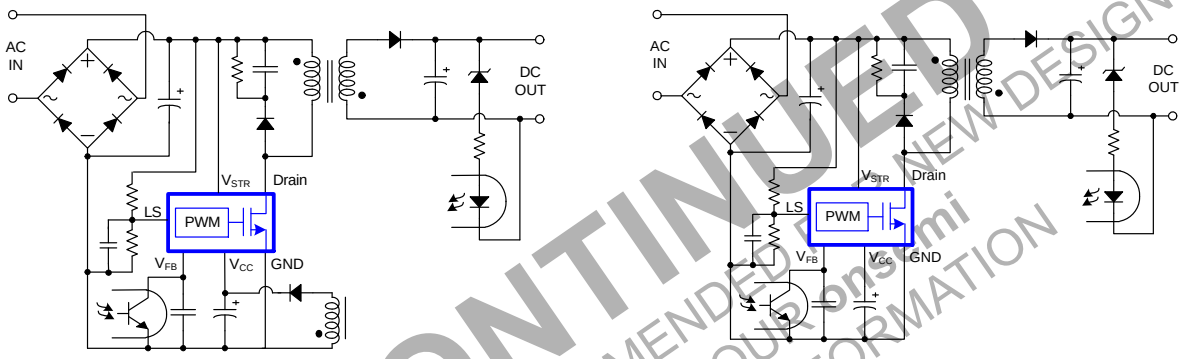

(a) With Bias Winding (b) Without Bias Winding

Figure 1. Typical Application

DISCONTINUED
THIS DEVICE IS NOT RECOMMENDED FOR NEW DESIGN
PLEASE CONTACT YOUR onsemi
REPRESENTATIVE FOR INFORMATION

INTERNAL BLOCK DIAGRAM

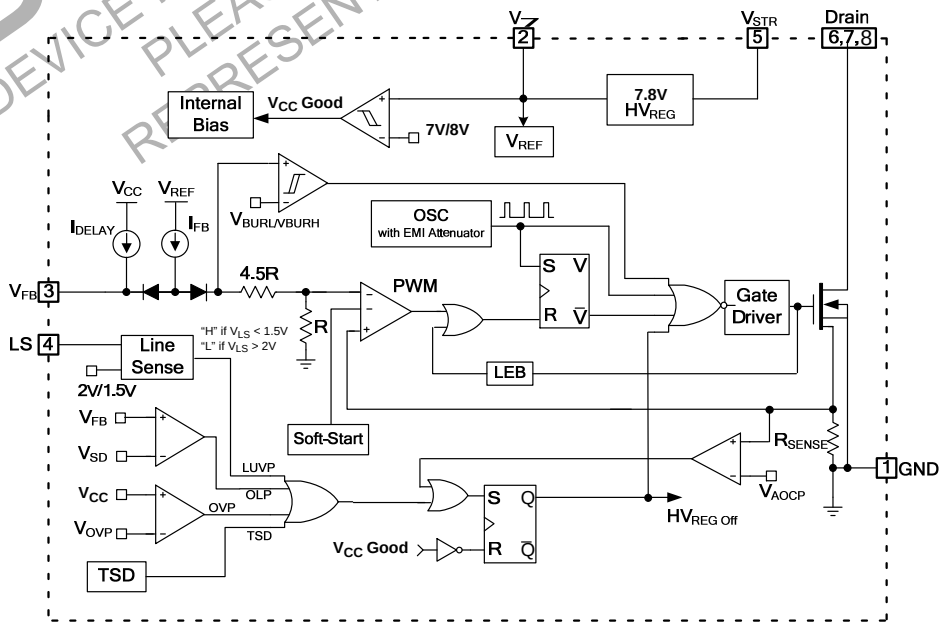

Figure 2. Internal Block Diagram

PIN CONFIGURATION

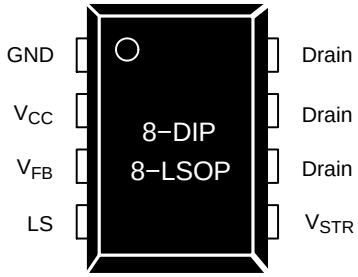

Figure 3. Pin Configuration

PIN DEFINITIONS

Pin No.	Name	Description
1	GND	**Ground.** SENSEFET source terminal on the primary side and internal control ground.
2	V_{CC}	**Positive Supply Voltage Input.** Although connected to an auxiliary transformer winding, current is supplied from pin 5 (V_{STR}) via an internal switch during startup (*see Figure 2*). Once V_{CC} reaches the UVLO upper threshold (12 V), the internal startup switch opens and device power is supplied via the auxiliary transformer winding.
3	V_{FB}	**Feedback Voltage.** Non−inverting input to the PWM comparator, with a 0.11 mA current source connected internally and a capacitor and opto−coupler typically connected externally. There is a delay while charging external capacitor C_{FB} from 2.4 V to 5 V using an internal 2.7 μA current source. This delay prevents false triggering under transient conditions, but allows the protection mechanism to operate under true overload conditions.
4	LS	**Line Sense Pin** This pin is used to protect the device when the input voltage is lower than the rated input voltage range. If this pin is not used, connect to ground.
5	V_{STR}	**Startup.** Connected to the rectified AC line voltage source. At startup, the internal switch supplies internal bias and charges an external storage capacitor placed between the V_{CC} pin and ground. Once V_{CC} reaches 8 V, all internal blocks are activated. After that, the internal high−voltage regulator (HV REG) turns on and off irregularly to maintain V_{CC} at 7.8 V.
6, 7, 8	Drain	**Drain.** Designed to connect directly to the primary lead of the transformer and capable of switching a maximum of 650 V. Minimizing the length of the trace connecting these pins to the transformer decreases leakage inductance.

DISCONTINUED
THIS DEVICE IS NOT RECOMMENDED FOR NEW DESIGN
PLEASE CONTACT YOUR ONSEMI REPRESENTATIVE FOR INFORMATION

ABSOLUTE MAXIMUM RATINGS (T_A = 25°C unless otherwise specified)

Symbol	Parameter	Min	Max	Unit
V_{STR}	V_{STR} Pin Voltage	−0.3	650	V
V_{DS}	Drain Pin Voltage	−0.3	650	V
V_{CC}	Supply Voltage	−	26	V
V_{LS}	LS Pin Voltage	−	Internally Clamped Voltage (Note 4)	V
V_{FB}	Feedback Voltage Range	−0.3	Internally Clamped Voltage (Note 4)	V
I_{DM}	Drain Current Pulsed (Note 5)	−	1.5	A
E_{AS}	Single−Pulsed Avalanche Energy (Note 6)	−	11	mJ
P_D	Total Power Dissipation	−	1.3	W
T_J	Operating Junction Temperature	−40	+150	°C
T_A	Operating Ambient Temperature	−40	+125	°C
T_{STG}	Storage Temperature	−55	+150	°C
ESD	Human Body Model, JESD22−A114	−	4	kV
	Charged Device Model, JESD22−C101	−	2	

Stresses exceeding those listed in the Maximum Ratings table may damage the device. If any of these limits are exceeded, device functionality should not be assumed, damage may occur and reliability may be affected.

4. V_{FB} is clamped by internal clamping diode (13 V I_{CLAMP_MAX} < 100 μA). After Shutdown, before V_{CC} reaching V_{STOP}, $V_{SD} < V_{FB} < V_{CC}$.
5. Repetitive rating: pulse−width limited by maximum junction temperature.
6. L = 21 mH, starting T_J = 25°C

THERMAL IMPEDANCE (T_A = 25°C unless otherwise specified)

Symbol	Parameter	Value	Unit
θ_{JA}	Junction−to−Ambient Thermal Impedance (Note 7)	93	°C/W

7. JEDEC recommended environment, JESD51−2 and test board, JESD51−10 with minimum land pattern for 8DIP and JESD51−3 with minimum land pattern for 8LSOP.

ELECTRICAL CHARACTERISTICS (T_A = 25°C unless otherwise specified)

Symbol	Parameter	Test Condition	Min	Typ	Max	Unit
SENSEFET SECTION						
BV_{DSS}	Drain−Source Breakdown Voltage	V_{CC} = 0 V, I_D = 250 μA	650	−	−	V
I_{DSS}	Zero Gate Voltage Drain Current	V_{DS} = 650 V, V_{GS} = 0 V	−	−	50	μA
		V_{DS} = 520 V, V_{GS} = 0 V, T_A = 125°C (Note 8)	−	−	250	μA
$R_{DS(ON)}$	Drain−Source On−State Resistance (Note 9)	V_{GS} = 10 V, I_D = 0.3 A	−	14	19	Ω
C_{ISS}	Input Capacitance	V_{GS} = 0 V, V_{DS} = 25 V, f = 1 MHz	−	162	−	pF
C_{OSS}	Output Capacitance	V_{GS} = 0 V, V_{DS} = 25 V, f = 1 MHz	−	14.9	−	pF
C_{RSS}	Reverse Transfer Capacitance	V_{GS} = 0 V, V_{DS} = 25 V, f = 1 MHz	−	2.7	−	pF
t_r	Rise Time	V_{DS} = 325 V, I_D = 0.5 A, R_G = 25 Ω	−	6.1	−	ns
t_f	Fall Time	V_{DS} = 325 V, I_D = 0.5 A, R_G = 25 Ω	−	43.6	−	ns
CONTROL SECTION						
f_{OSC}	Switching Frequency	V_{FB} = 4 V, V_{CC} = 10 V	61	67	73	KHz
Δf_{OSC}	Switching Frequency Variation	−25°C < T_J < 85°C	−	±5	±10	%
f_M	Frequency Modulation (Note 8)		−	±3	−	kHz
D_{MAX}	Maximum Duty Cycle	V_{FB} = 4 V, V_{CC} = 10 V	66	72	78	%
D_{MIN}	Minimum Duty Ratio	V_{FB} = 0 V, V_{CC} = 10 V	0	0	0	%

DISCONTINUED
THIS DEVICE IS NOT RECOMMENDED FOR NEW DESIGN
PLEASE CONTACT YOUR onsemi
REPRESENTATIVE FOR INFORMATION

ELECTRICAL CHARACTERISTICS (T_A = 25°C unless otherwise specified) (continued)

Symbol	Parameter	Test Condition		Min	Typ	Max	Unit
V_{START}	UVLO Threshold Voltage	V_{FB} = 0 V, V_{CC} Sweep		7	8	9	V
V_{STOP}		After Turn−on		6	7	8	V
I_{FB}	Feedback Source Current	V_{FB} = 0, V_{CC} = 10 V		90	110	130	μA
$t_{S/S}$	Internal Soft−Start Time	V_{FB} = 4 V, V_{CC} = 10 V		10	15	20	ms
BURST−MODE SECTION							
V_{BURH}	Burst−Mode HIGH Threshold Voltage	V_{CC} = 10 V V_{FB} Increase	FSL206MR	0.66	0.83	1.00	V
			FSL206MRB	0.40	0.50	0.60	V
V_{BURL}	Burst−Mode LOW Threshold Voltage	V_{CC} = 10 V V_{FB} Decrease	FSL206MR	0.59	0.74	0.89	V
			FSL206MRB	0.28	0.35	0.42	V
HYS_{BUR}	Burst−Mode Hysteresis		FSL206MR	−	90	−	mV
			FSL206MRB	−	150	−	mV
PROTECTION SECTION							
I_{LIM}	Peak Current Limit	V_{FB} = 4 V, di/dt = 300 mA/μs, V_{CC} = 10 V		0.54	0.60	0.66	A
t_{CLD}	Current Limit Delay Time (Note 8)			−	100	−	ns
V_{SD}	Shutdown Feedback Voltage	V_{CC} = 10 V		4.5	5.0	5.5	V
I_{DELAY}	Shutdown Delay Current	V_{FB} = 4 V		2.1	2.7	3.3	μA
t_{LEB}	Leading Edge Blanking Time (Note 8)			250	−	−	ns
V_{AOCP}	Abnormal Over−Current Protection (Note 8)			−	0.7	−	V
V_{OVP}	Over−Voltage Protection	V_{FB} = 4 V, V_{CC} Increase		23.0	24.5	26.0	V
V_{LS_OFF}	Line−Sense Protection On to Off	V_{FB} = 3 V, V_{CC} = 10 V, V_{LS} Decrease		1.9	2.0	2.1	V
V_{LS_ON}	Line−Sense Protection Off to On	V_{FB} = 3 V, V_{CC} = 10 V, V_{LS} Increase		1.4	1.5	1.6	V
TSD	Thermal Shutdown Temperature (Note 8)			125	135	150	°C
HYS_{TSD}	TSD Hysteresis Temperature (Note 8)			−	60	−	°C
HIGH VOLTAGE REGULATOR SECTION							
H_{HVR}	HV Regulator Voltage	V_{FB} = 0 V, V_{STR} = 40 V		−	7.8	−	V
TOTAL DEVICE SECTION							
I_{OP1}	Operating Supply Current (Control Part Only, without Switching)	V_{CC} = 15 V, 0 V < V_{FB} < V_{BURL}		−	0.3	0.5	mA
I_{OP2}	Operating Supply Current (Control Part Only, without Switching)	V_{CC} = 8 V, 0 V < V_{FB} < V_{BURL}		−	0.25	0.45	mA
I_{OP3}	Operating Supply Current (Note 8) (While Switching)	V_{CC} = 15 V, V_{BURL} < V_{FB} < V_{SD}		−	−	1.3	mA
I_{CH}	Startup Charging Current	V_{CC} = 0 V, V_{STR} > 40 V		1.6	1.9	2.4	mA
I_{START}	Startup Current	V_{CC} = Before V_{START}, V_{FB} = 0 V		−	100	150	μA
V_{STR}	Minimum V_{STR} Supply Voltage	V_{CC} = V_{FB} = 0 V, V_{STR} Increase		−	26	−	V

Product parametric performance is indicated in the Electrical Characteristics for the listed test conditions, unless otherwise noted. Product performance may not be indicated by the Electrical Characteristics if operated under different conditions.

8. Though guaranteed by design, it is not 100% tested in production.
9. Pulse test: pulse width = 300 ms, duty cycle = 2%.

DISCONTINUED
THIS DEVICE IS NOT RECOMMENDED FOR NEW DESIGN
PLEASE CONTACT YOUR onsemi REPRESENTATIVE FOR INFORMATION

TYPICAL PERFORMANCE CHARACTERISTICS

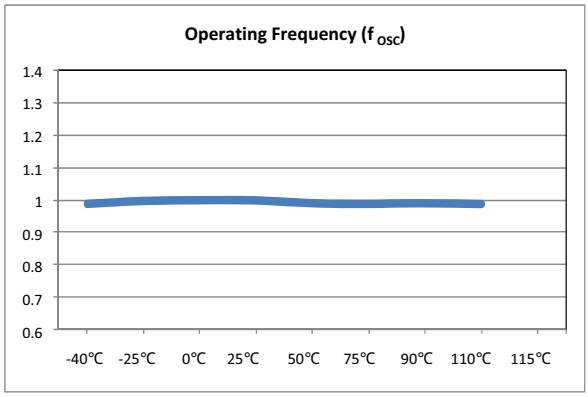

Figure 4. Operating Frequency vs. Temperature

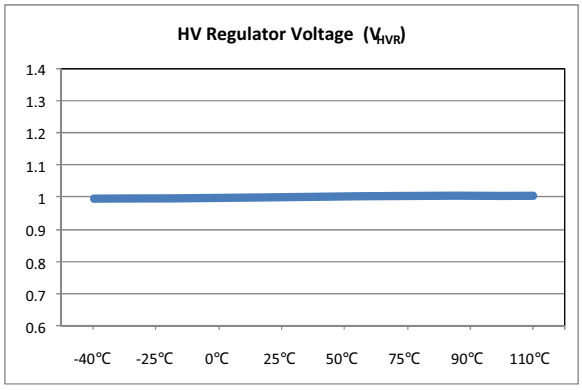

Figure 5. HV Regulator Voltage vs. Temperature

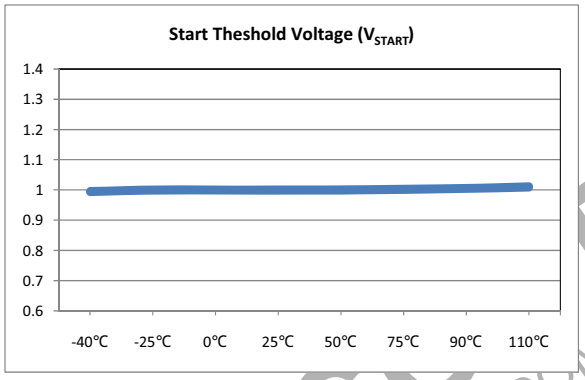

Figure 6. Start Threshold Voltage vs. Temperature

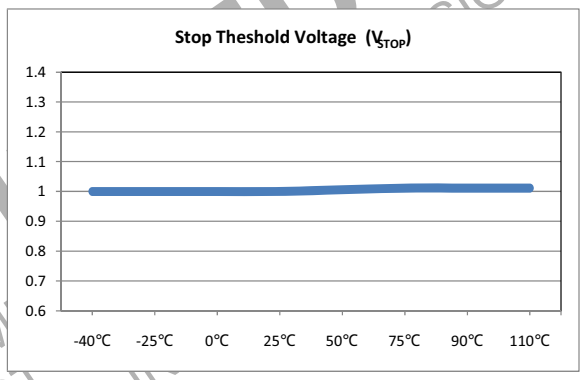

Figure 7. Stop Threshold Voltage vs. Temperature

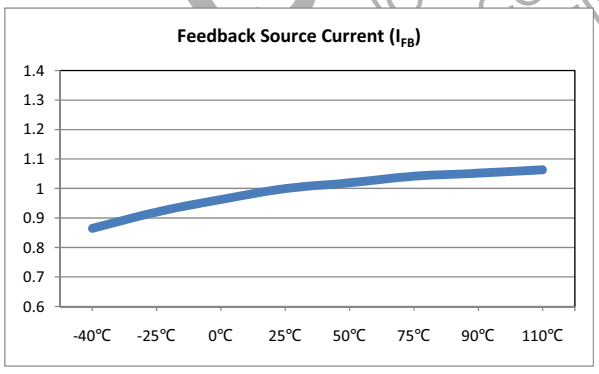

Figure 8. Feedback Source Current vs. Temperature

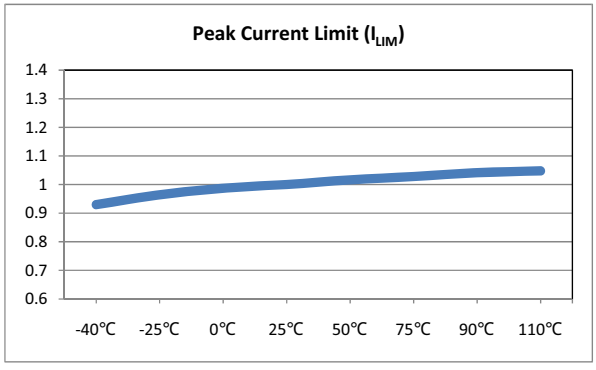

Figure 9. Peak Current Limit vs. Temperature

TYPICAL PERFORMANCE CHARACTERISTICS (Continued)

(These Characteristic graphs are normalized at T_A = 25.)

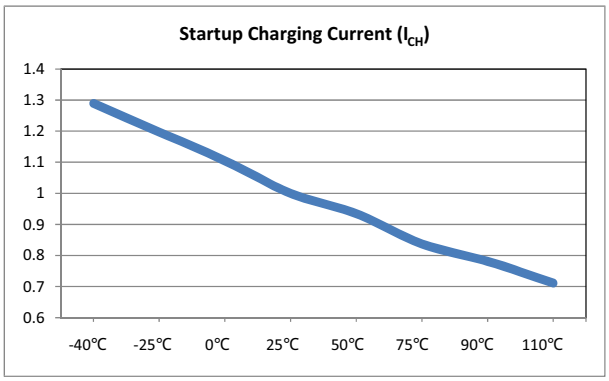

Figure 10. Startup Charging Current vs. Temperature

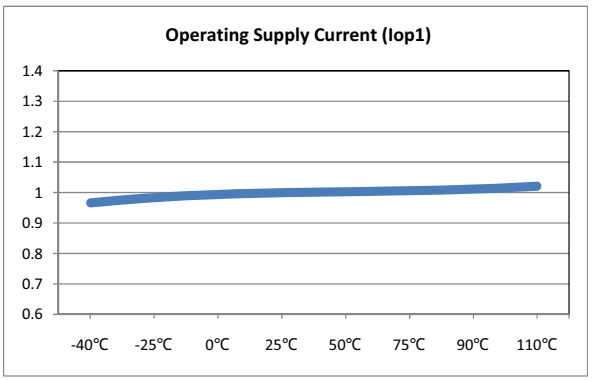

Figure 11. Operating Supply Current 1 vs. Temperature

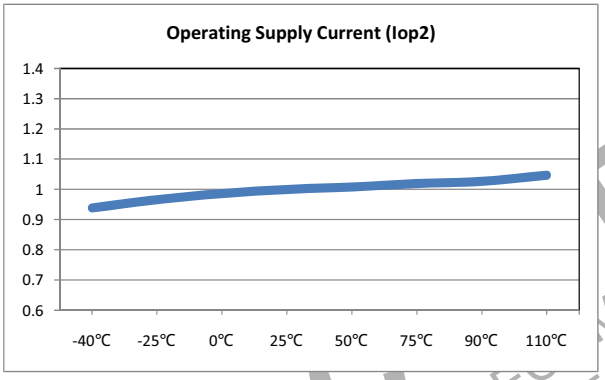

Figure 12. Operating Supply Current 2 vs. Temperature

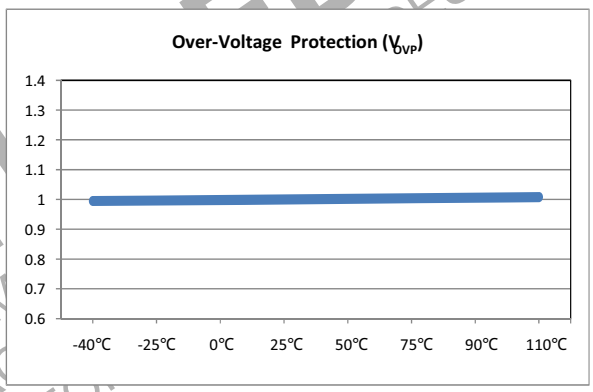

Figure 13. Over−Voltage Protection Voltage vs. Temperature

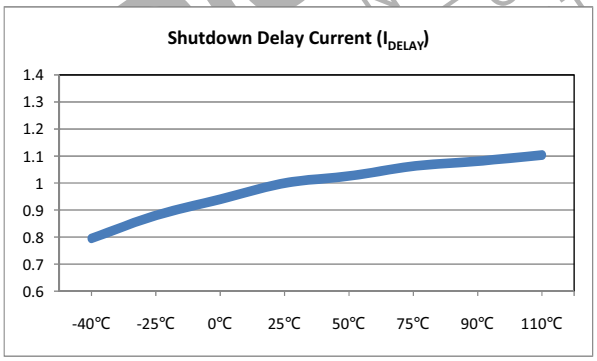

Figure 14. Shutdown Delay Current vs. Temperature

FUNCTIONAL DESCRIPTION

Startup

At startup, an internal high−voltage current source supplies the internal bias and charges the external capacitor (C_A) connected with the V_{CC} pin, as illustrated in Figure 15. An internal high−voltage regulator (HV REG) located between the V_{STR} and V_{CC} pins regulates the V_{CC} to 7.8 V and supplies operating current. Therefore, FSL206MR needs no auxiliary bias winding.

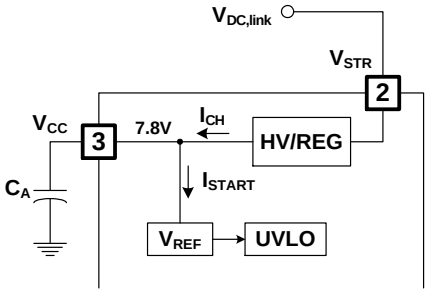

Figure 15. Startup Block

Oscillator Block

The oscillator frequency is set internally and the power switch has a random frequency fluctuation function. Fluctuation of the switching frequency of a switched power supply can reduce EMI by spreading the energy over a wider frequency range than the bandwidth measured by the EMI test equipment. The amount of EMI reduction is directly related to the range of the frequency variation. The range of frequency variation is fixed internally; however, its selection is randomly chosen by the combination of external feedback voltage and internal free−running oscillator. This randomly chosen switching frequency effectively spreads the EMI noise nearby switching frequency and allows the use of a cost−effective inductor instead of an AC input line filter to satisfy the world−wide EMI requirements.

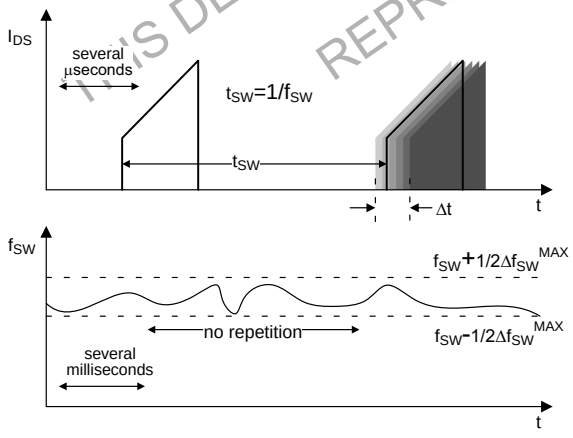

Figure 16. Frequency Fluctuation Waveform

Feedback Control

FSL206MR employs current−mode control, as shown in Figure 17. An opto−coupler (such as the FOD817A) and shunt regulator (such as the KA431) are typically used to implement the feedback network. Comparing the feedback voltage with the voltage across the R_{SENSE} resistor makes it possible to control the switching duty cycle. When the shunt regulator reference pin voltage exceeds the internal reference voltage of 2.5 V, the optocoupler LED current increases, the feedback voltage V_{FB} is pulled down, and the duty cycle is reduced. This typically occurs when the input voltage is increased or the output load is decreased.

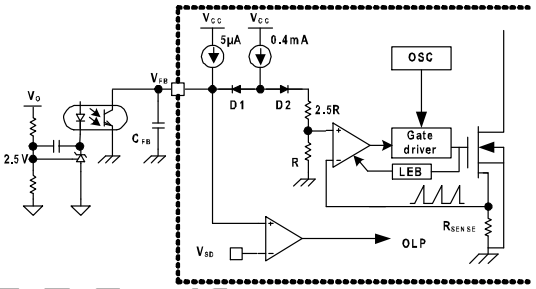

Figure 17. Pulse−Width−Modulation (PWM) Circuit

Leading−Edge Blanking (LEB)

At the instant the internal SENSEFET is turned on, the primary−side capacitance and secondary−side rectifier diode reverse recovery typically cause a high−current spike through the SENSEFET. Excessive voltage across the R_{SENSE} resistor leads to incorrect feedback operation in the current−mode PWM control. To counter this effect, the power switch employs a leading−edge blanking (LEB) circuit (*see the Figure 17*). This circuit inhibits the PWM comparator for a short time (t_{LEB}) after the SENSEFET is turned on.

Protection Circuits

The protective functions include Overload Protection (OLP), Over−Voltage Protection (OVP), Under−Voltage Lockout (UVLO), Line Under−Voltage Protection (LUVP), Abnormal Over−Current Protection (AOCP), and thermal shutdown power switch. Because these protection circuits are fully integrated inside the IC without external components, reliability is improved without increasing cost. Once a fault condition occurs, switching is terminated and the SENSEFET remains off. This causes V_{CC} to fall. When V_{CC} reaches the UVLO stop voltage V_{STOP} (7 V), the protection is reset and the internal high− voltage current source charges the V_{CC} capacitor via the V_{STR} pin. When V_{CC} reaches the UVLO start voltage V_{START} (8 V), the FPS resumes normal operation. In this manner, auto−restart can alternately enable and disable the switching of the power SENSEFET until the fault condition is eliminated.

DISCONTINUED
THIS DEVICE IS NOT RECOMMENDED FOR NEW DESIGN
PLEASE CONTACT YOUR onsemi
REPRESENTATIVE FOR INFORMATION

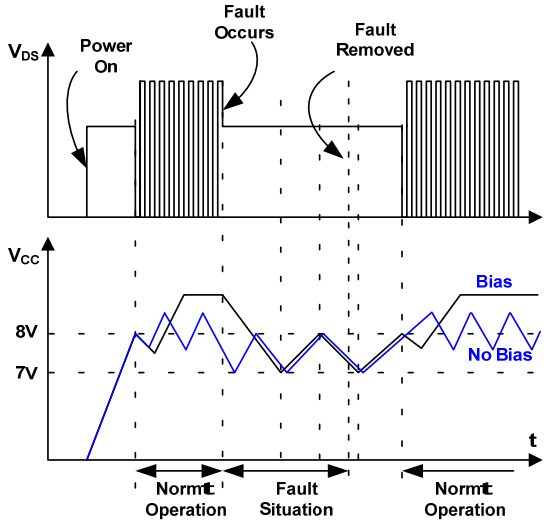

Figure 18. Auto−Restart Protection Waveforms

Overload Protection (OLP)

Overload is defined as the load current exceeding a preset level due to an unexpected event. In this situation, the protection circuit should be activated to protect the SMPS. However, even when the SMPS is operating normally, the overload protection (OLP) circuit can be activated during the load transition or startup. To avoid this undesired operation, the OLP circuit is activated after a specified time to determine whether it is a transient situation or a true overload situation. The Current−Mode feedback path limits the current in the SENSEFET when the maximum PWM duty cycle is attained. If the output consumes more than this maximum power, the output voltage (V_O) decreases below its rating voltage. This reduces the current through the opto−coupler LED, which also reduces the opto−coupler transistor current, increasing the feedback voltage (V_{FB}). If V_{FB} exceeds 2.4 V, the feedback input diode is blocked and the 2.7 μA current source (I_{DELAY}) starts to charge C_{FB} slowly up. In this condition, V_{FB} increases until it reaches 5 V, when the switching operation is terminated, as shown in Figure 19. The shutdown delay is the time required to charge C_{FB} from 2.4 V to 5 V with 2.7 μA current source.

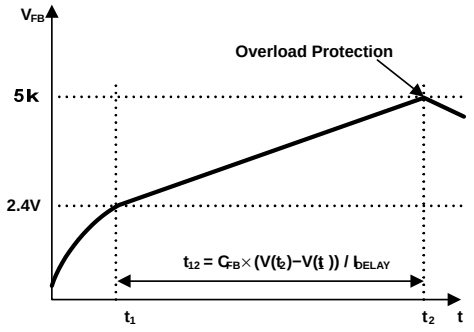

Figure 19. Overload Protection (OLP)

Abnormal Over−Current Protection (AOCP)

When the secondary rectifier diodes or the transformer pin are shorted, a steep current with extremely high di/dt can flow through the SENSEFET during the LEB time. Even though the power switch has OLP (Overload Protection), it is not enough to protect the FPS in that abnormal case, since severe current stress is imposed on the SENSEFET until OLP triggers. The power switch includes the internal AOCP (Abnormal Over−Current Protection) circuit shown in Figure 20. When the gate turn−on signal is applied to the power SENSEFET, the AOCP block is enabled and monitors the current through the sensing resistor. The voltage across the resistor is compared with a preset AOCP level. If the sensing resistor voltage is greater than the AOCP level, the set signal is applied to the latch, resulting in the shutdown of the SMPS.

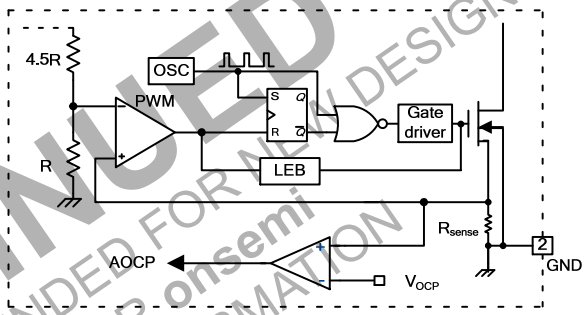

Figure 20. Abnormal Over−Current Protection

Thermal Shutdown (TSD)

The SENSEFET and control IC being integrated makes it easier to detect the temperature of the SENSEFET. When the junction temperature exceeds ~135°C, thermal shutdown is activated and the power switch is restarted after temperature decreases to 60°C.

Over−Voltage Protection (OVP)

In the event of a malfunction in the secondary−side feedback circuit or an open feedback loop caused by a soldering defect, the current through the opto−coupler transistor becomes almost zero (*refer to Figure 17*). Then V_{FB} climbs up in a similar manner to the overload situation, forcing the preset maximum current to be supplied to the SMPS until the overload protection is activated. Because excess energy is provided to the output, the output voltage may exceed the rated voltage before the overload protection is activated, resulting in the breakdown of the devices in the secondary side. To prevent this situation, an over−voltage protection (OVP) circuit is employed. In general, V_{CC} is proportional to the output voltage and the FPS uses V_{CC} instead of directly monitoring the output voltage. If V_{CC} exceeds 24.5 V, OVP circuit is activated, resulting in termination of the switching operation. To avoid undesired activation of OVP during normal operation, V_{CC} should be designed to be below 24.5 V.

DISCONTINUED
THIS DEVICE IS NOT RECOMMENDED FOR NEW DESIGN
PLEASE CONTACT YOUR onsemi
REPRESENTATIVE FOR INFORMATION

Line Under−Voltage Protection (LUVP)

If the input voltage of the converter is lower than the minimum operating voltage, the converter input current increases too much, causing components failure. If the input voltage is low, the converter should be protected. In the FSL206MR, the LUVP circuit senses the input voltage using the LS pin and, if this voltage is lower than 1.5 V, the LUVP signal is generated. The comparator has 0.5 V hysteresis. If the LUVP signal is generated, the output drive block is shut down and the output voltage feedback loop is saturated.

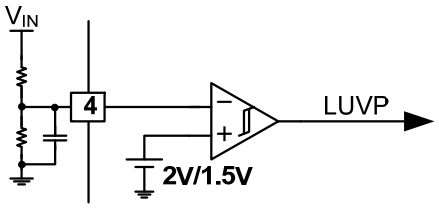

Figure 21. Line UVP Circuit

Soft−Start

The FSL206MR has an internal soft−start circuit that slowly increases the feedback voltage, together with the SENSEFET current, after it starts. The typical soft−start time is 15 ms, as shown in Figure 22, where progressive increments of the SENSEFET current are allowed during the startup phase. The pulse width to the power switching device is progressively increased to establish the correct working conditions for transformers, inductors, and capacitors. The voltage on the output capacitors is progressively increased with the intention of smoothly establishing the required output voltage. It also helps prevent transformer saturation and reduce the stress on the secondary diode.

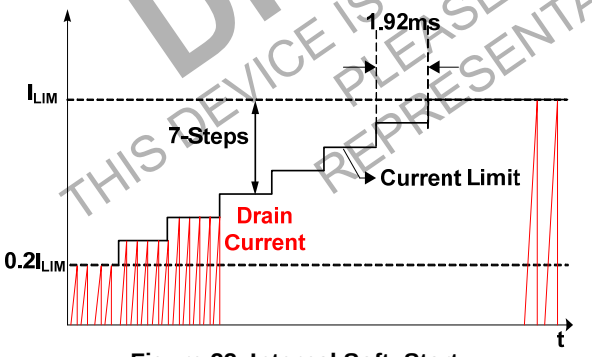

Figure 22. Internal Soft−Start

Burst Operation

To minimize power dissipation in Standby Mode, the power switch enters Burst Mode. As the load decreases, the feedback voltage decreases. As shown in Figure 23, the device automatically enters Burst Mode when the feedback voltage drops below V_{BURH}. Switching continues until the feedback voltage drops below V_{BURL}. At this point, switching stops and the output voltages start to drop at a rate dependent on the standby current load. This causes the feedback voltage to rise. Once it passes V_{BURH}, switching resumes. The feedback voltage then falls and the process repeats. Burst Mode alternately enables and disables switching of the SENSEFET and reduces switching loss in Standby Mode.

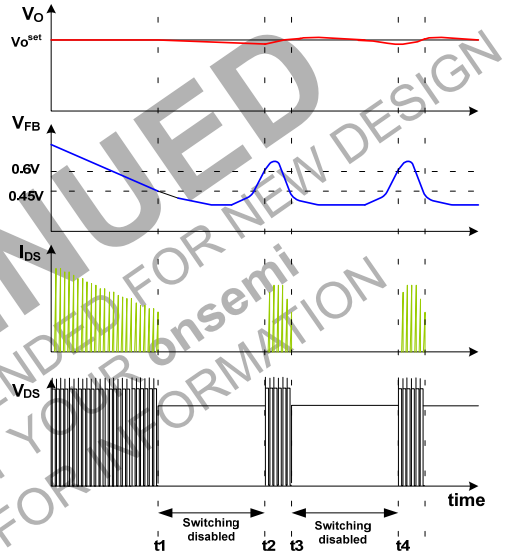

Figure 23. Burst−Mode Operation

DISCONTINUED
THIS DEVICE IS NOT RECOMMENDED FOR NEW DESIGN
PLEASE CONTACT YOUR onsemi
REPRESENTATIVE FOR INFORMATION

SENSEFET is a registered trademark of Semiconductor Components Industries, LLC (SCILLC) or its subsidiaries in the United States and/or other countries.

PDIP8 9.42x6.38, 2.54P
CASE 646CM
ISSUE O

DATE 31 JUL 2016

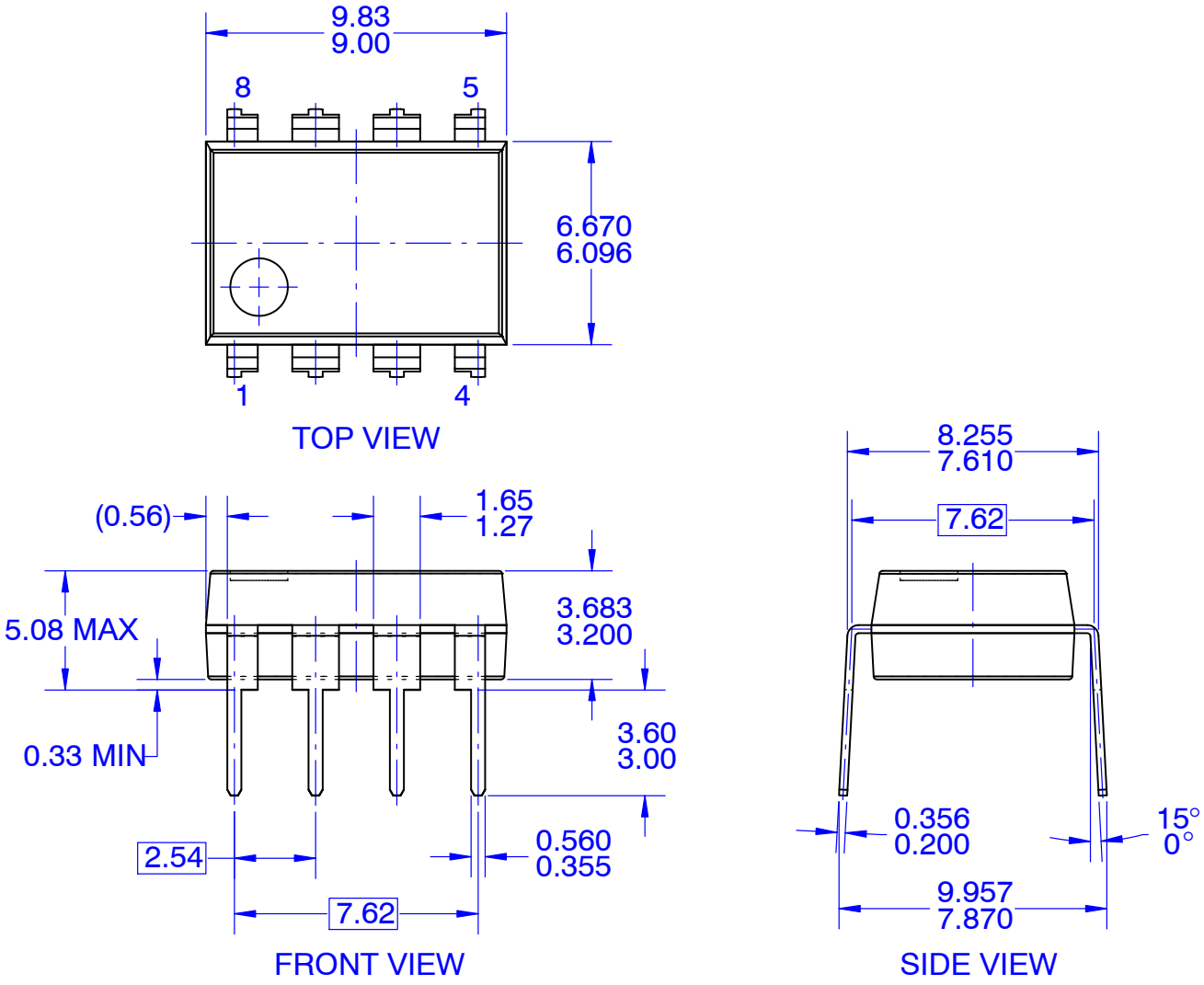

NOTES:
A. CONFORMS TO JEDEC MS−001, VARIATION BA
B. ALL DIMENSIONS ARE IN MILLIMETERS
C. DIMENSIONS ARE EXCLUSIVE OF BURRS, MOLD FLASH, AND TIE BAR EXTRUSIONS
D. DIMENSIONS AND TOLERANCES PER ASME Y14.5M−2009

DOCUMENT NUMBER:	**98AON13468G**	Electronic versions are uncontrolled except when accessed directly from the Document Repository. Printed versions are uncontrolled except when stamped "CONTROLLED COPY" in red.	
DESCRIPTION:	**PDIP8 9.42X6.38, 2.54P**		**PAGE 1 OF 1**

onsemi and onsemi are trademarks of Semiconductor Components Industries, LLC dba **onsemi** or its subsidiaries in the United States and/or other countries. **onsemi** reserves the right to make changes without further notice to any products herein. **onsemi** makes no warranty, representation or guarantee regarding the suitability of its products for any particular purpose, nor does **onsemi** assume any liability arising out of the application or use of any product or circuit, and specifically disclaims any and all liability, including without limitation special, consequential or incidental damages. **onsemi** does not convey any license under its patent rights nor the rights of others.

PDIP8 9.59x6.60, 2.54P
CASE 646CN
ISSUE O

DATE 31 JUL 2016

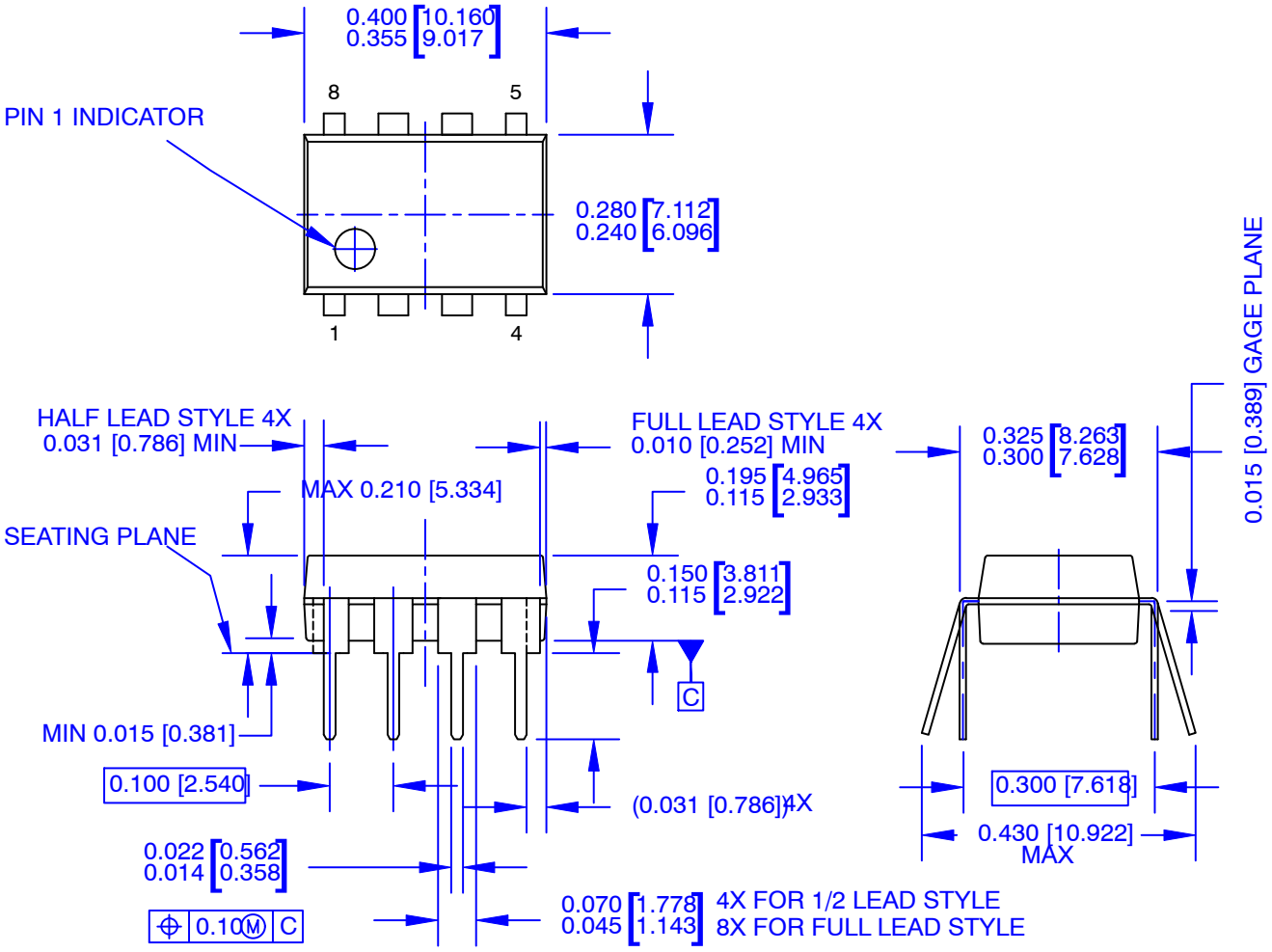

NOTES:

A) THIS PACKAGE CONFORMS TO JEDEC MS−001 VARIATION BA WHICH DEFINES 2 VERSIONS OF THE PACKAGE TERMINAL STYLE WHICH ARE SHOWN HERE.
B) CONTROLING DIMS ARE IN INCHES
C) DIMENSIONS ARE EXCLUSIVE OF BURRS, MOLD FLASH, AND TIE BAR EXTRUSIONS.
D) DIMENSIONS AND TOLERANCES PER ASME Y14.5M−2009

DOCUMENT NUMBER:	**98AON13470G**	Electronic versions are uncontrolled except when accessed directly from the Document Repository. Printed versions are uncontrolled except when stamped "CONTROLLED COPY" in red.	
DESCRIPTION:	**PDIP8 9.59x6.60, 2.54P**		**PAGE 1 OF 1**

onsemi and onsemi are trademarks of Semiconductor Components Industries, LLC dba **onsemi** or its subsidiaries in the United States and/or other countries. **onsemi** reserves the right to make changes without further notice to any products herein. **onsemi** makes no warranty, representation or guarantee regarding the suitability of its products for any particular purpose, nor does **onsemi** assume any liability arising out of the application or use of any product or circuit, and specifically disclaims any and all liability, including without limitation special, consequential or incidental damages. **onsemi** does not convey any license under its patent rights nor the rights of others.

PDIP8 GW
CASE 709AJ
ISSUE O

DATE 31 JAN 2017

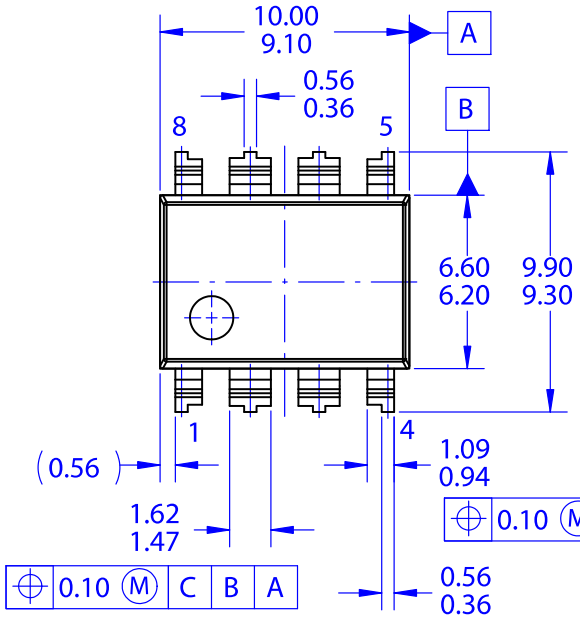

TOP VIEW

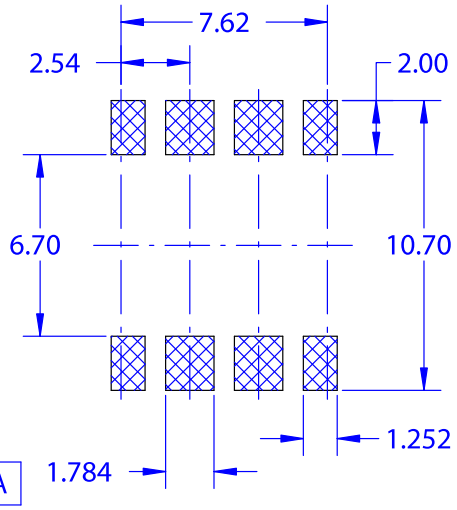

LAND PATTERN RECOMMENDATION

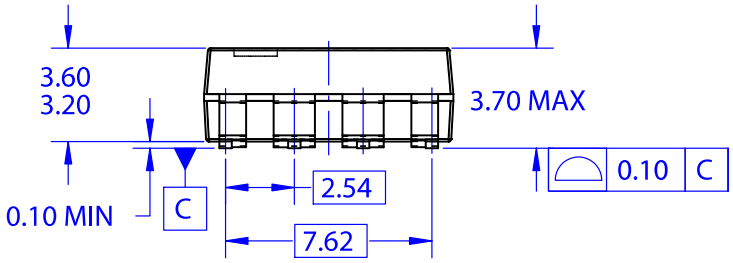

FRONT VIEW

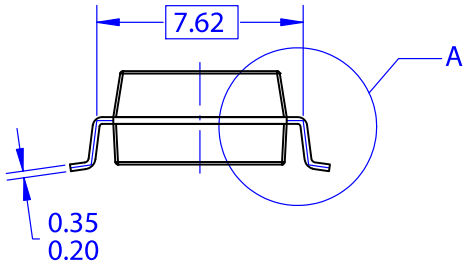

SIDE VIEW

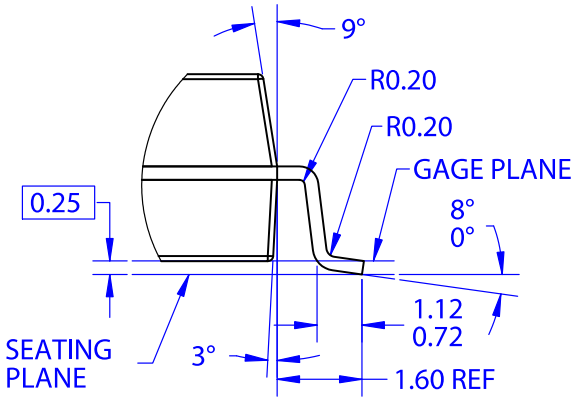

DETAIL A
SCALE 2:1

NOTES: UNLESS OTHERWISE SPECIFIED
A. NO INDUSTRY STANDARD APPLIES TO THIS PACKAGE
B. ALL DIMENSIONS ARE IN MILLIMETERS
C. DIMENSIONS ARE EXCLUSIVE OF BURRS, MOLD FLASH, AND TIE BAR EXTRUSIONS
D. DIMENSIONS AND TOLERANCES PER ASME Y14.5M-2009

DOCUMENT NUMBER:	**98AON13756G**	Electronic versions are uncontrolled except when accessed directly from the Document Repository. Printed versions are uncontrolled except when stamped "CONTROLLED COPY" in red.	
DESCRIPTION:	**PDIP8 GW**		**PAGE 1 OF 1**

onsemi and onsemi are trademarks of Semiconductor Components Industries, LLC dba **onsemi** or its subsidiaries in the United States and/or other countries. **onsemi** reserves the right to make changes without further notice to any products herein. **onsemi** makes no warranty, representation or guarantee regarding the suitability of its products for any particular purpose, nor does **onsemi** assume any liability arising out of the application or use of any product or circuit, and specifically disclaims any and all liability, including without limitation special, consequential or incidental damages. **onsemi** does not convey any license under its patent rights nor the rights of others.

onsemi, , and other names, marks, and brands are registered and/or common law trademarks of Semiconductor Components Industries, LLC dba "**onsemi**" or its affiliates and/or subsidiaries in the United States and/or other countries. **onsemi** owns the rights to a number of patents, trademarks, copyrights, trade secrets, and other intellectual property. A listing of **onsemi**'s product/patent coverage may be accessed at www.onsemi.com/site/pdf/Patent−Marking.pdf. **onsemi** reserves the right to make changes at any time to any products or information herein, without notice. The information herein is provided "as−is" and **onsemi** makes no warranty, representation or guarantee regarding the accuracy of the information, product features, availability, functionality, or suitability of its products for any particular purpose, nor does **onsemi** assume any liability arising out of the application or use of any product or circuit, and specifically disclaims any and all liability, including without limitation special, consequential or incidental damages. Buyer is responsible for its products and applications using **onsemi** products, including compliance with all laws, regulations and safety requirements or standards, regardless of any support or applications information provided by **onsemi**. "Typical" parameters which may be provided in **onsemi** data sheets and/or specifications can and do vary in different applications and actual performance may vary over time. All operating parameters, including "Typicals" must be validated for each customer application by customer's technical experts. **onsemi** does not convey any license under any of its intellectual property rights nor the rights of others. **onsemi** products are not designed, intended, or authorized for use as a critical component in life support systems or any FDA Class 3 medical devices or medical devices with a same or similar classification in a foreign jurisdiction or any devices intended for implantation in the human body. Should Buyer purchase or use **onsemi** products for any such unintended or unauthorized application, Buyer shall indemnify and hold **onsemi** and its officers, employees, subsidiaries, affiliates, and distributors harmless against all claims, costs, damages, and expenses, and reasonable attorney fees arising out of, directly or indirectly, any claim of personal injury or death associated with such unintended or unauthorized use, even if such claim alleges that **onsemi** was negligent regarding the design or manufacture of the part. **onsemi** is an Equal Opportunity/Affirmative Action Employer. This literature is subject to all applicable copyright laws and is not for resale in any manner.

ADDITIONAL INFORMATION

TECHNICAL PUBLICATIONS:
Technical Library: www.onsemi.com/design/resources/technical−documentation
onsemi Website: www.onsemi.com

ONLINE SUPPORT: www.onsemi.com/support
For additional information, please contact your local Sales Representative at www.onsemi.com/support/sales

ENTEGRECİ

Bu belge www.entegreci.com üzerinden sunulmaktadır.

Elektronik komponent tedarikinde Entegreci

Entegreci, Eskişehir merkezli, Türkiye geneline satış yapan bir elektronik komponent mağazasıdır. Entegreler (IC), mikrodenetleyiciler, transistörler, diyotlar, pasif elemanlar, konnektörler, modüller ve geliştirme kartları tek adetten seri üretim adetlerine kadar satılır. Ürün sayfalarında güncel stok durumunu, fiyatı ve datasheet bağlantısını bulabilirsiniz.

Parça koduyla arama

Üretici parça numarasını yazın; stok ve fiyatı hemen görün.

www.entegreci.com

Ürün kategorileri

Entegreden kapasitöre tüm elektronik komponent kategorileri.

Kategorilere göz atın

Üreticiler

Aradığınız üreticinin ürünlerini tek sayfada inceleyin.

Üreticileri görün

Toplu alım ve teklif

Listede olmayan ya da yüksek adetli parçalar için teklif isteyin.

Teklif isteyin

www.entegreci.com | **destek@entegreci.com** | **0850 305 90 34**

Entegreci is an online electronic components store based in Türkiye. Search by manufacturer part number to see stock, prices and datasheets for integrated circuits, microcontrollers, transistors, passive components and connectors, or request a quote for parts that are not listed.

Bu sayfa Entegreci tarafından eklenmiştir. Belgenin önceki sayfaları asıl yayıncısına aittir ve içeriği değiştirilmemiştir; en güncel sürüm için belgenin yayıncısına başvurun.