ON Semiconductor®

April 2018

FSL156MRIN
Green-Mode Power Switch (FPS™)

DISCONTINUED
THIS DEVICE IS NOT RECOMMENDED FOR NEW DESIGN
PLEASE CONTACT YOUR onsemi
REPRESENTATIVE FOR INFORMATION

Features

- Advanced Soft Burst Mode for Low Standby Power and Low Audible Noise
- Random Frequency Fluctuation (RFF) for Low EMI
- Pulse-by-Pulse Current Limit
- Overload Protection (OLP), Over-Voltage Protection (OVP), Abnormal Over-Current Protection (AOCP), Internal Thermal Shutdown (TSD) with Hysteresis, Output-Short Protection (OSP), and Under-Voltage Lockout (UVLO) with Hysteresis , Line Over Voltage Protection (LOVP)
- Low Operating Current (0.4mA) in Burst Mode
- Internal Startup Circuit
- Internal High-Voltage SenseFET: 650V
- Built-in Soft-Start: 15ms
- Auto-Restart Mode

Applications

- Power Supply for Home Appliances, LCD Monitors, SMPSs, and DVD Players

Description

The FSL156MRIN is an integrated Pulse Width Modulation (PWM) controller and SenseFET specifically designed for offline Switched Mode Power Supplies (SMPS) with minimal external components. The PWM controller includes an integrated fixed-frequency oscillator, Line Over Voltage Protection (LOVP), Under-Voltage Lockout (UVLO), Leading Edge Blanking (LEB), optimized gate driver, internal soft-start, temperature-compensated precise current sources for loop compensation, and self-protection circuitry. Compared with a discrete MOSFET and PWM controller solution, the FSL156MRIN reduces total cost, component count, size, and weight; while simultaneously increasing efficiency, productivity, and system reliability. This device provides a basic platform suited for cost-effective design of a flyback converter.

Ordering Information

Part Number	Package[1]	Operating Junction Temperature	Current Limit (Typ.)	$R_{DS(ON)}$ (Max.)	Output Power Table[2]			
					230V_{AC} ±15%		85-265V_{AC}	
					Adapter[3]	Open Frame[4]	Adapter[3]	Open Frame[4]
FSL156MRIN	8-DIP	−40°C ~ +125°C	1.6A	2.2Ω	26W	40W	20W	30W

Notes:
1. Lead-free package per JEDEC J-STD-020B.
2. The junction temperature can limit the maximum output power.
3. Typical continuous power in a non-ventilated enclosed adapter measured at 50°C ambient temperature.
4. Maximum practical continuous power in an open-frame design at 50°C ambient temperature.

© 2012 Semiconductor Components Industries, LLC.

Application Circuit

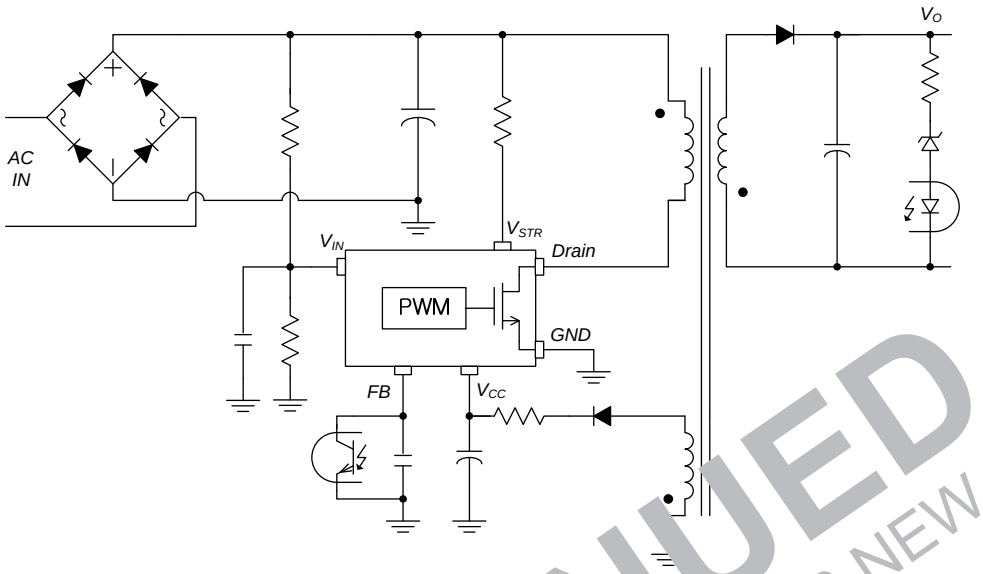

Figure 1. Typical Application Circuit

Internal Block Diagram

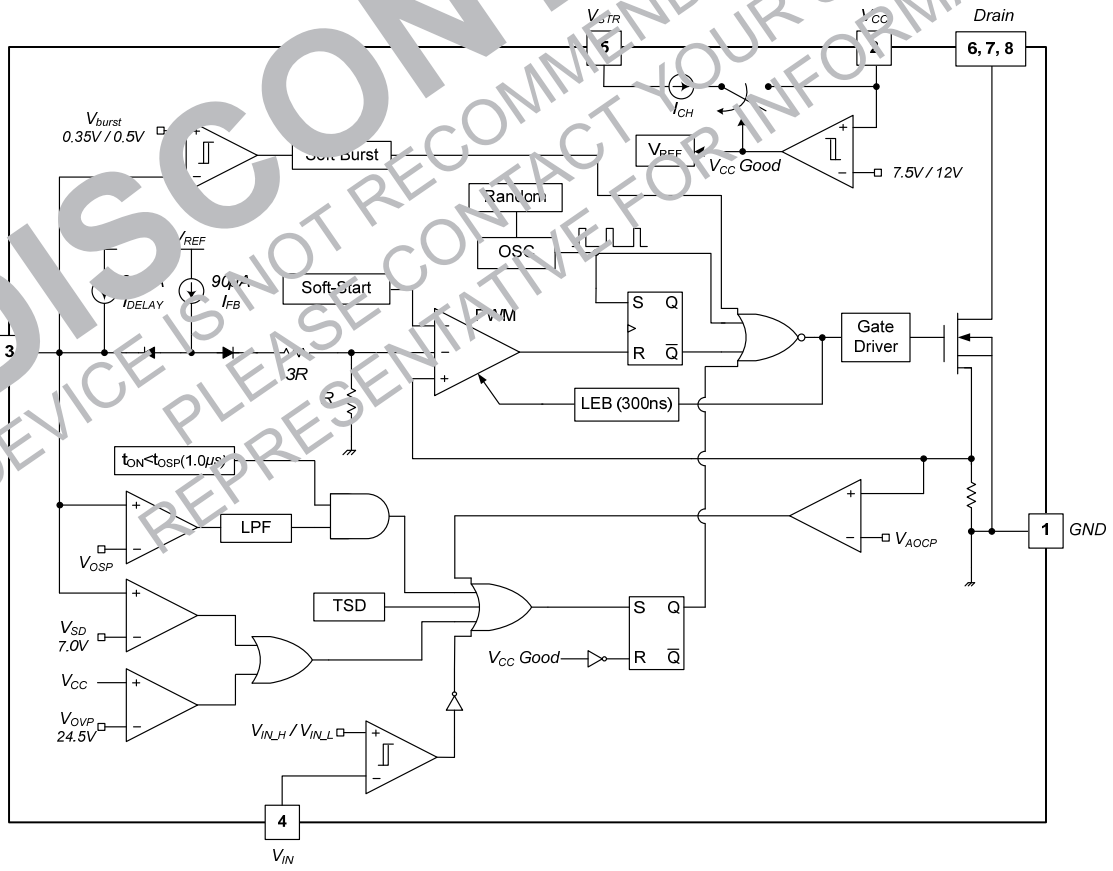

Figure 2. Internal Block Diagram

DISCONTINUED
THIS DEVICE IS NOT RECOMMENDED FOR NEW DESIGN
PLEASE CONTACT YOUR onsemi
REPRESENTATIVE FOR INFORMATION

Pin Configuration

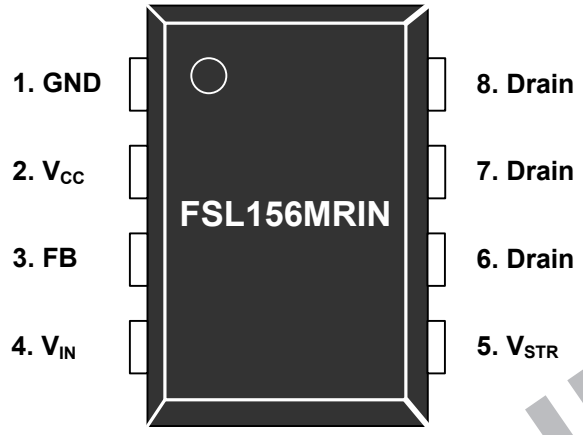

Figure 3. Pin Assignments (Top View)

Pin Definitions

Pin #	Name	Description
1	GND	**Ground**. This pin is the ground and the SenseFET source.
2	V_{CC}	**Power Supply**. This pin is the positive supply input, which provides the internal operating current for both start-up and steady-state operation.
3	FB	**Feedback**. This pin is internally connected to the inverting input of the PWM comparator. The collector of opto-coupler is typically tied to this pin. For stable operation, a capacitor should be placed between this pin and GND. If the voltage of this pin reaches 7V, the overload protection triggers, which shuts down the FPS.
4	V_{IN}	**Line Over-Voltage Input**. This pin is the input pin of line voltage. The voltage, which is divided by resistors, is the input of this pin. If this pin voltage is higher than V_{INH} voltage, the LOVP triggers, which shuts down the FPS. Do not leave this pin floating. If LOVP is not used, this pin should be directly connected to the GND.
5	V_{STR}	**Startup**. This pin is connected directly, or through a resistor, to the high-voltage DC link. At startup, the internal high-voltage current source supplies internal bias and charges the external capacitor connected to the V_{CC} pin. Once V_{CC} reaches 12V, the internal current source (I_{CH}) is disabled.
6	Drain	**SenseFET Drain**. High-voltage power SenseFET drain connection.
7		
8		

DISCONTINUED
THIS DEVICE IS NOT RECOMMENDED FOR NEW DESIGN
PLEASE CONTACT YOUR onsemi
REPRESENTATIVE FOR INFORMATION

Absolute Maximum Ratings

Stresses exceeding the absolute maximum ratings may damage the device. The device may not function or be operable above the recommended operating conditions and stressing the parts to these levels is not recommended. In addition, extended exposure to stresses above the recommended operating conditions may affect device reliability. The absolute maximum ratings are stress ratings only.

Symbol	Parameter		Min.	Max.	Unit
V_{STR}	V_{STR} Pin Voltage			650	V
V_{DS}	Drain Pin Voltage			650	V
V_{CC}	V_{CC} Pin Voltage			26	V
V_{FB}	Feedback Pin Voltage		−0.3	10.0	V
V_{IN}	V_{IN} Pin Voltage		−0.3	[illegible]	V
I_{DM}	Drain Current Pulsed			4	A
I_{DS}	Continuous Switching Drain Current[5]	T_C=25°C		90	A
		T_C=100°C		1.7	
E_{AS}	Single-Pulsed Avalanche Energy[6]			190	mJ
P_D	Total Power Dissipation (T_C=25°C)[7]			1.5	W
T_J	Maximum Junction Temperature			150	°C
	Operating Junction Temperature[8]		−40	+125	°C
T_{STG}	Storage Temperature		−55	+150	°C
ESD	Electrostatic Discharge Capability	Human Body Model, JESD22-A114		4.5	kV
		Charged Device Model, JESD22-C101		2.0	

Notes:

5. Repetitive peak switching current when the inductive load is assumed. limited by maximum duty (D_{MAX}=0.73) and junction temperature. *(see Figure 4)*.
6. L=45mH, starting T_J=25°C.
7. Infinite cooling condition *(refer to the SEMI G30-88)*.
8. Although this parameter guarantees IC operation, it does not guarantee all electrical characteristics.

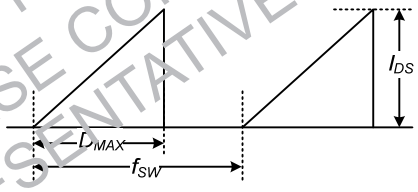

Figure 4. Repetitive Peak Switching Current

Thermal Impedance

T_A=25°C unless otherwise specified.

Symbol	Parameter	Value	Unit
θ_{JA}	Junction-to-Ambient Thermal Impedance[9]	85	°C/W
Ψ_{JL}	Junction-to-Lead Thermal Impedance[10]	11	°C/W

Notes:

9. JEDEC recommended environment, JESD51-2, and test board, JESD51-10, with minimum land pattern.
10. Measured on drain pin #7, close to the plastic interface.

DISCONTINUED
THIS DEVICE IS NOT RECOMMENDED FOR NEW DESIGN
PLEASE CONTACT YOUR onsemi REPRESENTATIVE FOR INFORMATION

Electrical Characteristics

T_J = 25°C unless otherwise specified.

Symbol	Parameter		Conditions	Min.	Typ.	Max.	Unit
SenseFET Section							
BV_{DSS}	Drain-Source Breakdown Voltage		V_{CC}=0V, I_D=250μA	650			V
I_{DSS}	Zero-Gate-Voltage Drain Current		V_{DS}=520V, T_A=125°C			250	μA
$R_{DS(ON)}$	Drain-Source On-State Resistance		V_{GS}=10V, I_D=1A		1.8	2.2	Ω
C_{ISS}	Input Capacitance[11]		V_{DS}=25V, V_{GS}=0V, f=1MHz		515		pF
C_{OSS}	Output Capacitance[11]		V_{DS}=25V, V_{GS}=0V, f=1MHz		75		pF
t_r	Rise Time		V_{DS}=325V, I_D=4A, R_G=25Ω				ns
t_f	Fall Time		V_{DS}=325V, I_D=4A, R_G=25Ω				ns
$t_{d(on)}$	Turn-On Delay		V_{DS}=325V, I_D=4A, R_G=25Ω				ns
$t_{d(off)}$	Turn-Off Delay		V_{DS}=325V, I_D=4A, R_G=25Ω				ns
Control Section							
f_S	Switching Frequency[11]		V_{CC}=14V, V_{FB}=4V		67	73	kHz
Δf_S	Switching Frequency Variation[11]		−25°C < T_J <		±5	±10	%
D_{MAX}	Maximum Duty Ratio		V_{CC}= V, $_B$=		67	73	%
D_{MIN}	Minimum Duty Ratio		$_{CC}$ 4V, V_{FL} 0V			0	%
I_{FB}	Feedback Source Current		V_{FB}=0		90	115	μA
V_{START}	UVLO Threshold Voltage		$_B$=0V, V_{CC} Sweep		12	13	V
V_{STOP}			After Turn-on, V_{FB} =0V	7.0	7.5	8.0	V
t_{SS}	Internal Soft-Start T e		V_{STR}=40V, V_{CC} Sweep		15		ms
V_{RECOMM}	Recommended V_{CC} R ge			13		23	V
Burst Mode Section							
V_{BURH}	Burst-Mode Voltage		V_{CC}=14V, V_{FB} Sweep	0.45	0.50	0.55	V
V_{BURL}				0.30	0.35	0.40	V
					150		mV
P tectio Sec on							
I_{LIM}	Peak Drain Current Limit		di/dt=300mA/μs	1.45	1.60	1.75	A
V_{SD}	Shutdown Feedback Voltage		V_{CC}=14V, V_{FB} Sweep	6.45	7.00	7.55	V
I_{DELAY}	Shutdown Delay Current		V_{CC}=14V, V_{FB}=4V	1.2	2.0	2.8	μA
t_{LEB}	Leading-Edge Blanking Time[11,12]				300		ns
V_{OVP}	Over-Voltage Protection		V_{CC} Sweep	23.0	24.5	26.0	V
V_{INH}	Line Over-Voltage Protection Threshold Voltage		V_{CC}=14V, V_{IN} Sweep	1.87	1.95	2.03	V
V_{INHYS}	Line Over-Voltage Protection Hysteresis		V_{CC}=14V, V_{IN} Sweep		0.06		V
t_{OSP}	Output-Short Protection[11]	Threshold Time	OSP Triggered when t_{ON}<t_{OSP} & V_{FB}>V_{OSP} (Lasts Longer than t_{OSP_FB})	0.7	1.0	1.3	μs
V_{OSP}		Threshold V_{FB}		1.8	2.0	2.2	V
t_{OSP_FB}		V_{FB} Blanking Time		2.0	2.5	3.0	μs
TSD	Thermal Shutdown Temperature[11]		Shutdown Temperature	125	135	145	°C
T_{HYS}			Hysteresis		60		°C

Continued on the following page…

DISCONTINUED
THIS DEVICE IS NOT RECOMMENDED FOR NEW DESIGN
PLEASE CONTACT YOUR onsemi REPRESENTATIVE FOR INFORMATION

Electrical Characteristics (Continued)

T_J = 25°C unless otherwise specified.

Symbol	Parameter	Conditions	Min.	Typ.	Max.	Unit
Total Device Section						
I_{OP}	Operating Supply Current, (Control Part in Burst Mode)	V_{CC}=14V, V_{FB}=0V	0.3	0.4	0.5	mA
I_{OPS}	Operating Switching Current, (Control Part and SenseFET Part)	V_{CC}=14V, V_{FB}=2V	1.1	1.5	1.9	mA
I_{START}	Start Current	V_{CC}=11V (Before V_{CC} Reaches V_{START})	85	120	155	µA
I_{CH}	Startup Charging Current	V_{CC}=V_{FB}=0V, V_{STR}=40V	0.7	1	1.3	mA
V_{STR}	Minimum V_{STR} Supply Voltage	V_{CC}=V_{FB}=0V, V_{STR} Sweep		26		V

Notes:

11. These parameters are guaranteed; not 100% tested in production.
12. t_{LEB} includes gate turn-on time.

DISCONTINUED
THIS DEVICE IS NOT RECOMMENDED FOR NEW DESIGN
PLEASE CONTACT YOUR onsemi
REPRESENTATIVE FOR INFORMATION

Typical Performance Characteristics

Characteristic graphs are normalized at T_A=25°C.

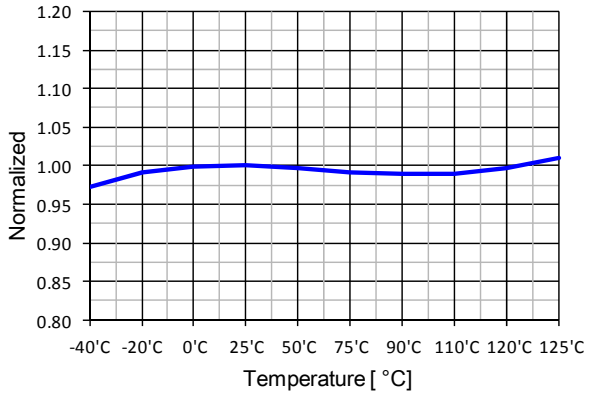

Figure 5. Operating Supply Current (I_{OP}) vs. T_A

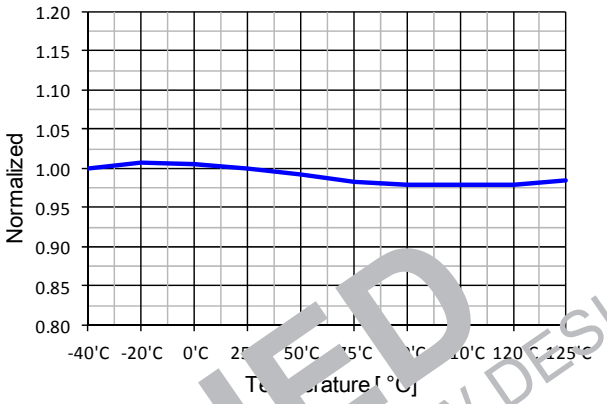

Figure 6. Operating Switching Current (I_{OPS}) vs. T_A

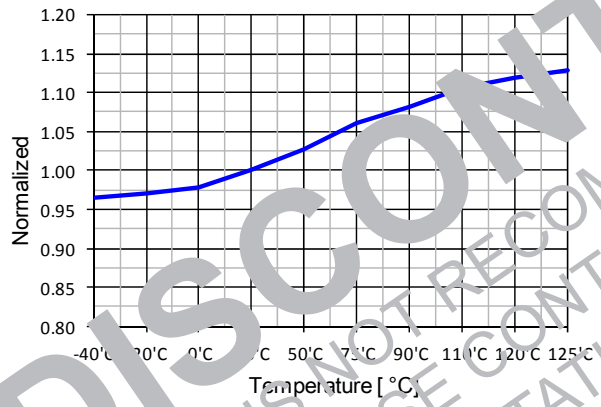

Figure 7. Startup Charging Current (I_{CH}) vs. T_A

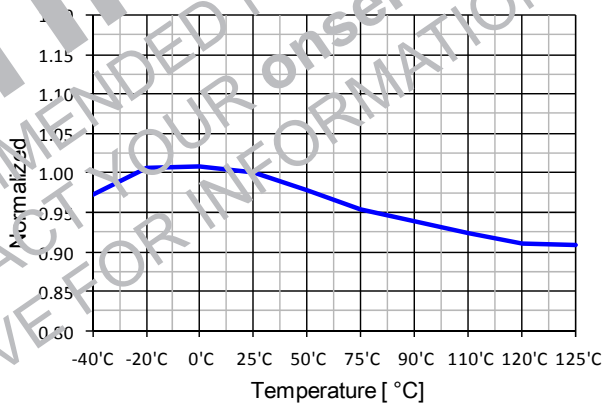

Figure 8. Peak Drain Current Limit (I_{LIM}) vs. T_A

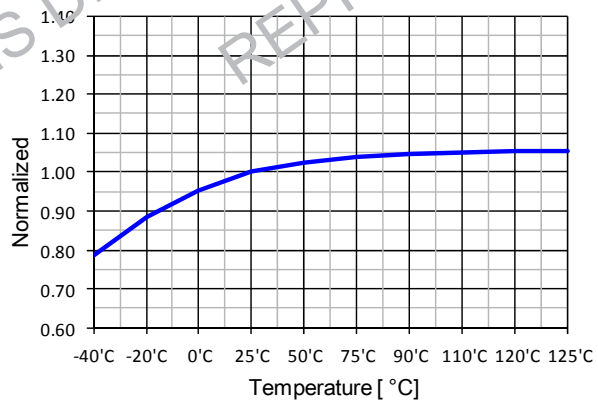

Figure 9. Feedback Source Current (I_{FB}) vs. T_A

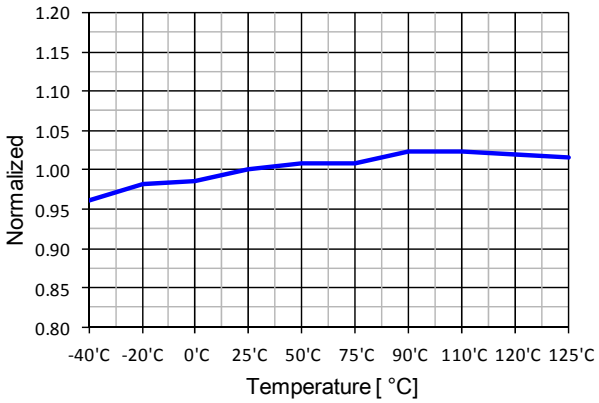

Figure 10. Shutdown Delay Current (I_{DELAY}) vs. T_A

DISCONTINUED
THIS DEVICE IS NOT RECOMMENDED FOR NEW DESIGN
PLEASE CONTACT YOUR onsemi
REPRESENTATIVE FOR INFORMATION

Typical Performance Characteristics

Characteristic graphs are normalized at T_A=25°C.

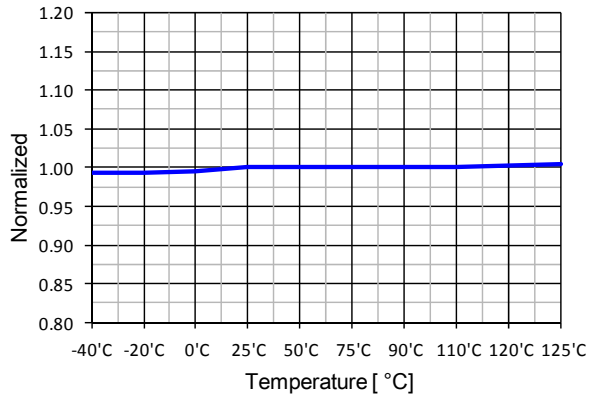

Figure 11. UVLO Threshold Voltage (V_{START}) vs. T_A

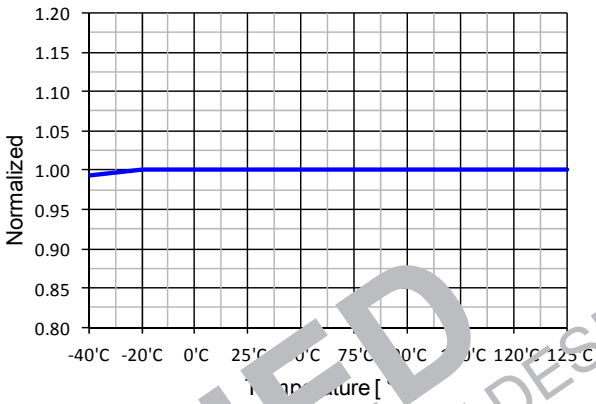

Figure 1. UVLO Threshold Voltage (V_{STOP}) vs. T_A

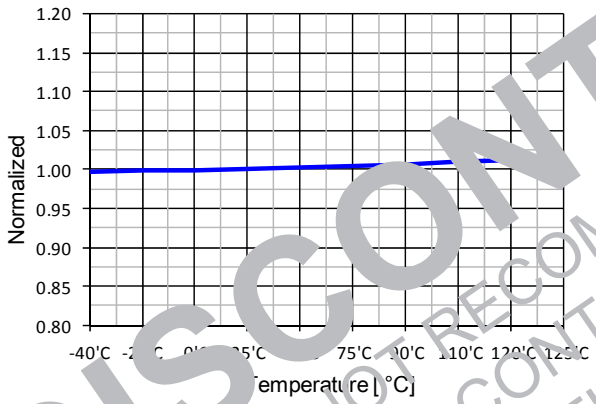

Figure 1. Shutdown Feedback Voltage (V_{SD}) vs. T_A

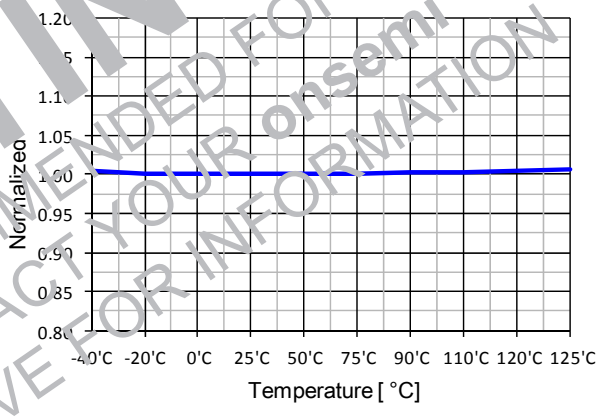

Figure 14. Over-Voltage Protection (V_{OVP}) vs. T_A

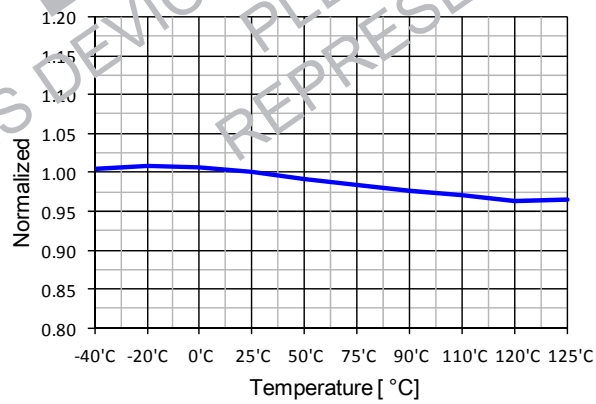

Figure 15. Switching Frequency (f_S) vs. T_A

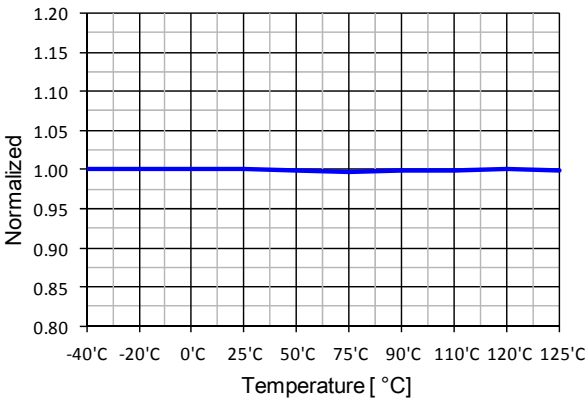

Figure 16. Maximum Duty Ratio (D_{MAX}) vs. T_A

DISCONTINUED
THIS DEVICE IS NOT RECOMMENDED FOR NEW DESIGN
PLEASE CONTACT YOUR onsemi
REPRESENTATIVE FOR INFORMATION

Typical Performance Characteristics

Characteristic graphs are normalized at T_A=25°C.

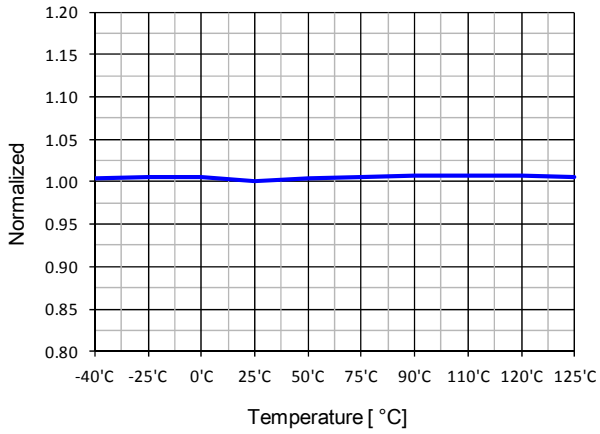

Figure 17. Line OVP (V_{INH}) vs. T_A

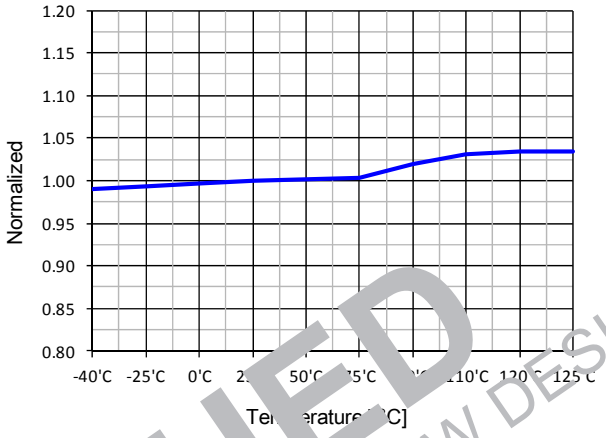

Figure 18. Hysteresis of LOVP (V_{INHYS}) vs. T_A

DISCONTINUED
THIS DEVICE IS NOT RECOMMENDED FOR NEW DESIGN
PLEASE CONTACT YOUR onsemi
REPRESENTATIVE FOR INFORMATION

Functional Description

1. Startup: At startup, an internal high-voltage current source supplies the internal bias and charges the external capacitor (C_{VCC}) connected to the V_{CC} pin, as illustrated in Figure 19. When V_{CC} reaches 12V, the FSL156MRIN begins switching and the internal high-voltage current source is disabled. Normal switching operation continues and the power is supplied from the auxiliary transformer winding unless V_{CC} goes below the stop voltage of 7.5V.

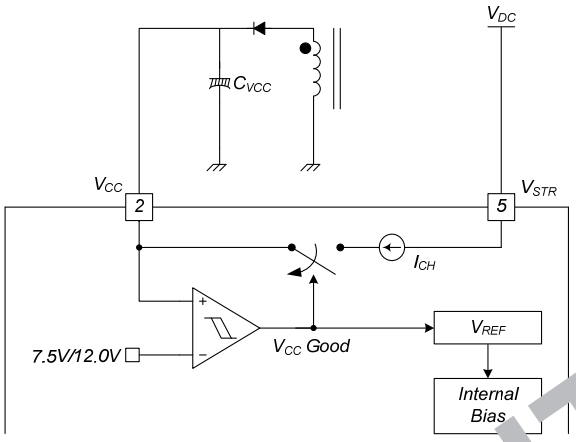

Figure 19. Startup Block

2. Soft-Start: The internal soft-start circuit increases PWM comparator inverting input voltage together with the SenseFET current, slowly after startup. The typical soft-start time is 15ms. The pulse width of the power switching device is progressively increased to establish the correct working conditions for the transformers, inductors, and capacitors. The voltage on the output capacitors is progressively increased to smoothly establish the required output voltage. This helps prevent transformer saturation and reduces stress on the secondary diode during startup.

3. Feedback Control: This device employs Current-Mode control, as shown in Figure 20. An opto-coupler (such as the FOD817) and shunt regulator (such as the KA431) are typically used to implement the feedback network. Comparing the feedback voltage with the voltage across the R_{SENSE} resistor makes it possible to control the switching duty cycle. When the reference pin voltage of the shunt regulator exceeds the internal reference voltage of 2.5V, the opto-coupler LED current increases, pulling down the feedback voltage and reducing drain current. This typically occurs when the input voltage is increased or the output load is decreased.

3.1 Pulse-by-Pulse Current Limit: Because Current-Mode control is employed, the peak current through the SenseFET is limited by the inverting input of PWM comparator (V_{FB}^*) as shown in Figure 20. Assuming that the 90μA current source flows only through the internal resistor (3R + R = 5kΩ), the cathode voltage of diode D2 is about 2.8V. Since D1 is blocked when the feedback voltage (V_{FB}) exceeds 2.8V, the maximum voltage of the cathode of D2 is clamped at this voltage. Therefore, the peak value of the current through the SenseFET is limited.

3.2 Leading-Edge Blanking (LEB): At the instant the internal SenseFET is turned on, a high-current spike usually occurs through the SenseFET, caused by primary-side capacitance and secondary-side rectifier reverse recovery. Excessive voltage across the R_{SENSE} resistor leads to incorrect feedback operation in Current-Mode PWM control. To counter this effect, the LEB circuit inhibits the PWM comparator for t_{LEB} (300ns) after the SenseFET is turned on.

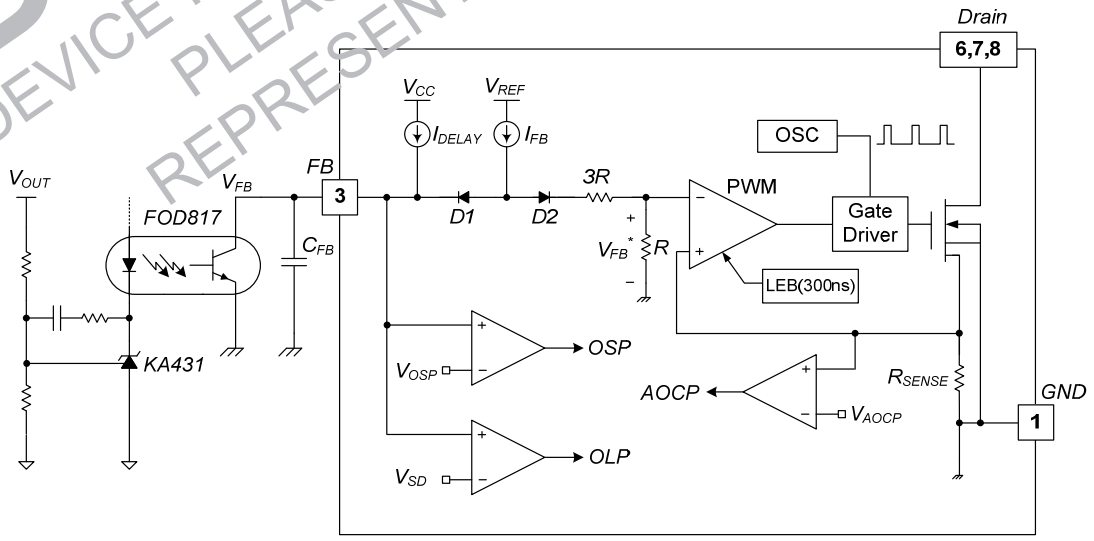

Figure 20. Pulse Width Modulation Circuit

DISCONTINUED
THIS DEVICE IS NOT RECOMMENDED FOR NEW DESIGN
PLEASE CONTACT YOUR onsemi
REPRESENTATIVE FOR INFORMATION

4. Protection Circuits: The FSL156MRIN has several self-protective functions, such as Overload Protection (OLP), Abnormal Over-Current Protection (AOCP), Output-Short Protection (OSP), Over-Voltage Protection (OVP), and Thermal Shutdown (TSD). All the protections are implemented as auto-restart. Once the fault condition is detected, switching is terminated and the SenseFET remains off. This causes V_{CC} to fall. When V_{CC} falls to the Under-Voltage Lockout (UVLO) stop voltage of 7.5V, the protection is reset and the startup circuit charges the V_{CC} capacitor. When V_{CC} reaches the start voltage of 12.0V, normal operation resumes. If the fault condition is not removed, the SenseFET remains off and V_{CC} drops to stop voltage again. In this manner, the auto-restart can alternately enable and disable the switching of the power SenseFET until the fault condition is eliminated. Because these protection circuits are fully integrated into the IC without external components, reliability is improved without increasing cost.

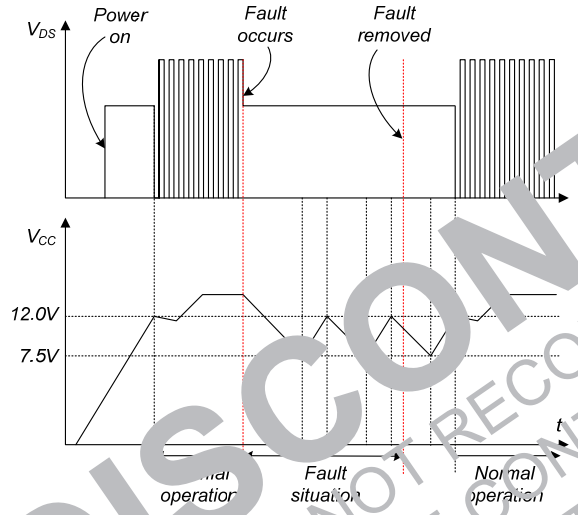

Figure 21. Auto-Restart Protection Waveforms

4. Overload Protection (OLP): Overload is defined as the load current exceeding its normal level due to an unexpected abnormal event. In this situation, the protection circuit should trigger to protect the SMPS. However, even when the SMPS is in normal operation, the overload protection circuit can be triggered during the load transition. To avoid this undesired operation, the overload protection circuit is designed to trigger only after a specified time to determine whether it is a transient situation or a true overload situation. Because of the pulse-by-pulse current-limit capability, the maximum peak current through the SenseFET is limited and, therefore, the maximum input power is restricted with a given input voltage. If the output consumes more than this maximum power, the output voltage (V_{OUT}) decreases below the set voltage. This reduces the current through the opto-coupler LED, which also reduces the opto-coupler transistor current, increasing the feedback voltage (V_{FB}). If V_{FB} exceeds 2.5V, D1 is blocked and the 2.0μA current source starts to charge C_{FB} slowly up. In this condition, V_{FB} continues increasing until it reaches 7.0V, when the switching operation is terminated, as shown in Figure 22. The delay for shutdown is the time required to charge C_{FB} from 2.5V to 7.0V with 2.0μA. A 25 ~ 50ms delay is typical for most applications. This protection is implemented as auto-restart.

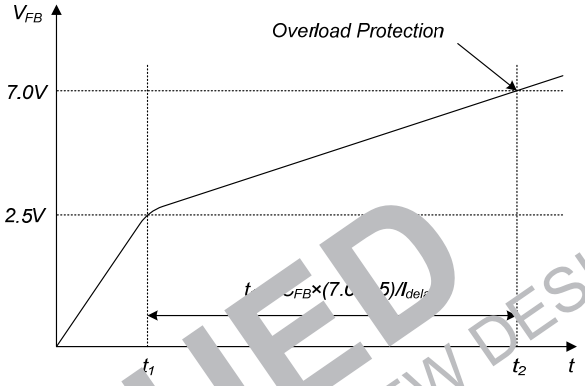

Figure 22. Overload Protection

4. Abnormal Over-Current Protection (AOCP): When the secondary rectifier diodes or the transformer pins are shorted, a steep current with extremely high di/dt can flow through the SenseFET during the minimum turn-on time. Even though the FSL156MRIN has overload protection, it is not enough to protect the FSL156MRIN in that abnormal case; due to the severe current stress imposed on the SenseFET until OLP is triggered. The internal AOCP circuit is shown in Figure 23. When the gate turn-on signal is applied to the power SenseFET, the AOCP block is enabled and monitors the current through the sensing resistor. The voltage across the resistor is compared with a preset AOCP level. If the sensing-resistor voltage is greater than the AOCP level, the set signal is applied to the S−R latch, resulting in the shutdown of the SMPS.

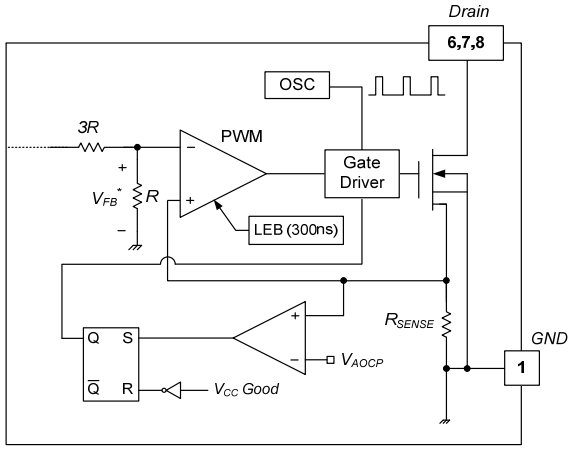

Figure 23. Abnormal Over-Current Protection

DISCONTINUED
THIS DEVICE IS NOT RECOMMENDED FOR NEW DESIGN
PLEASE CONTACT YOUR ONSEMI
REPRESENTATIVE FOR INFORMATION

4.3. Output-Short Protection (OSP): If the output is shorted, steep current with extremely high di/dt can flow through the SenseFET during the minimum turn-on time. Such a steep current creates high-voltage stress on the drain of the SenseFET when turned off. To protect the device from this abnormal condition, OSP is included. It is comprised of detecting V_{FB} and SenseFET turn-on time. When the V_{FB} is higher than 2.0V and the SenseFET turn-on time is lower than 1.0μs, this condition is recognized as an abnormal error and PWM switching shuts down until V_{CC} reaches V_{START} again. An abnormal condition output short is shown in Figure 24.

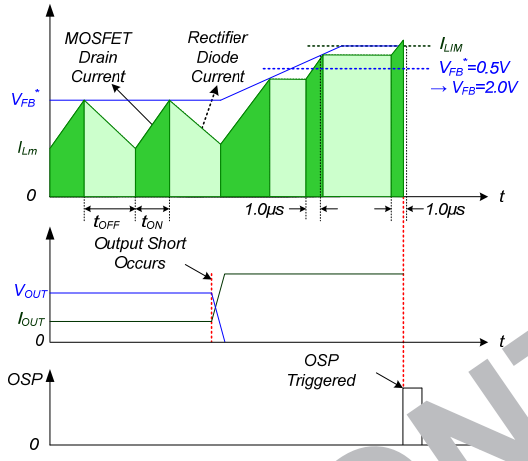

Figure 24. Output-Short Protection

4.4 Over-Voltage Protection (OVP): If the secondary-side feedback circuit malfunctions or a solder defect causes an opening in the feedback path, the current through the opto-coupler transistor becomes almost zero. Then V_{FB} climbs up in a similar manner to the overload situation, forcing the preset maximum current to be supplied to the SMPS until the overload protection is triggered. Because more energy than required is provided to the output, the output voltage may exceed the rated voltage before the overload protection is triggered, resulting in the breakdown of the devices in the secondary side. To prevent this situation, an OVP circuit is employed. In general, the V_{CC} is proportional to the output voltage and the FSL156MRIN uses V_{CC} instead of directly monitoring the output voltage. If V_{CC} exceeds 24.5V, an OVP circuit is triggered, resulting in the termination of the switching operation. To avoid undesired activation of OVP during normal operation, V_{CC} should be designed to be below 24.5V.

4.5 Thermal Shutdown (TSD): The SenseFET and the control IC on a die in one package makes it easier for the control IC to detect the temperature of the SenseFET. If the temperature exceeds ~135°C, the thermal shutdown is triggered and stops operation. The FSL156MRIN operates in Auto-Restart Mode until the temperature decreases to around 75°C, when normal operation resumes.

4.6 Line Over-Voltage Protection (LOVP): If the line input voltage is increased to an unwanted level, high line input voltage creates high-voltage stress on the entire system. To protect from this abnormal condition, LOVP is included. It is comprised of detecting V_{IN} using divided resistors. When V_{IN} is higher than 1.95V, this condition is recognized as an abnormal error and PWM switching shuts down until V_{IN} decreases to around 1.89V (60mV hysteresis).

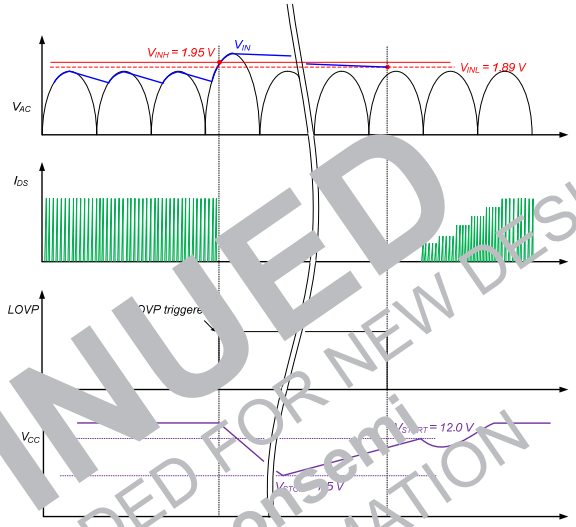

Figure 25. Line Over-Voltage Protection

5. Soft Burst Mode: To minimize power dissipation in Standby Mode, the FSL156MRIN enters Burst-Mode operation. As the load decreases, the feedback voltage decreases. As shown in Figure 22, the device automatically enters Burst Mode when the feedback voltage drops below V_{BURL} (350mV). At this point, switching stops and the output voltages start to drop at a rate dependent on standby current load. This causes the feedback voltage to rise. Once it passes V_{BURH} (500mV), switching resumes. The feedback voltage then falls and the process repeats. Burst Mode alternately enables and disables SenseFET switching, reducing switching loss in Standby Mode.

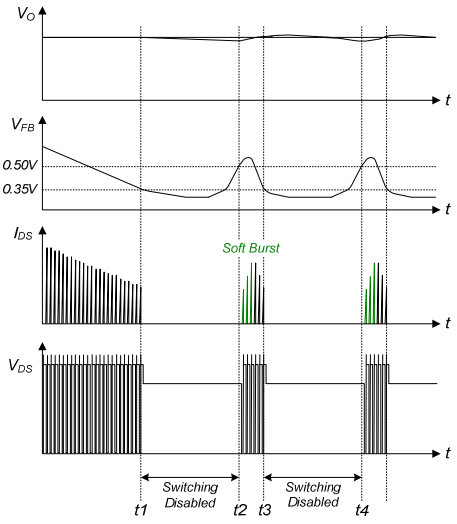

Figure 26. Burst-Mode Operation

DISCONTINUED
THIS DEVICE IS NOT RECOMMENDED FOR NEW DESIGN
PLEASE CONTACT YOUR onsemi
REPRESENTATIVE FOR INFORMATION

6. Random Frequency Fluctuation (RFF): Fluctuating switching frequency of an SMPS can reduce EMI by spreading the energy over a wide frequency range. The amount of EMI reduction is directly related to the switching frequency variation, which is limited internally. The switching frequency is determined randomly by external feedback voltage and an internal free-running oscillator at every switching instant. RFF effectively scatters EMI noise around typical switching frequency (67kHz) and can reduce the cost of the input filter included to meet the EMI requirements (e.g. EN55022).

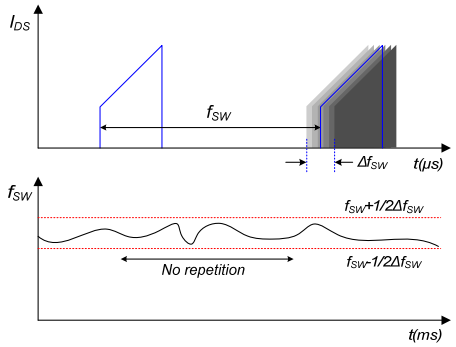

Figure 27. Random Frequency Fluctuation

DISCONTINUED
THIS DEVICE IS NOT RECOMMENDED FOR NEW DESIGN
PLEASE CONTACT YOUR onsemi
REPRESENTATIVE FOR INFORMATION

Package Dimensions

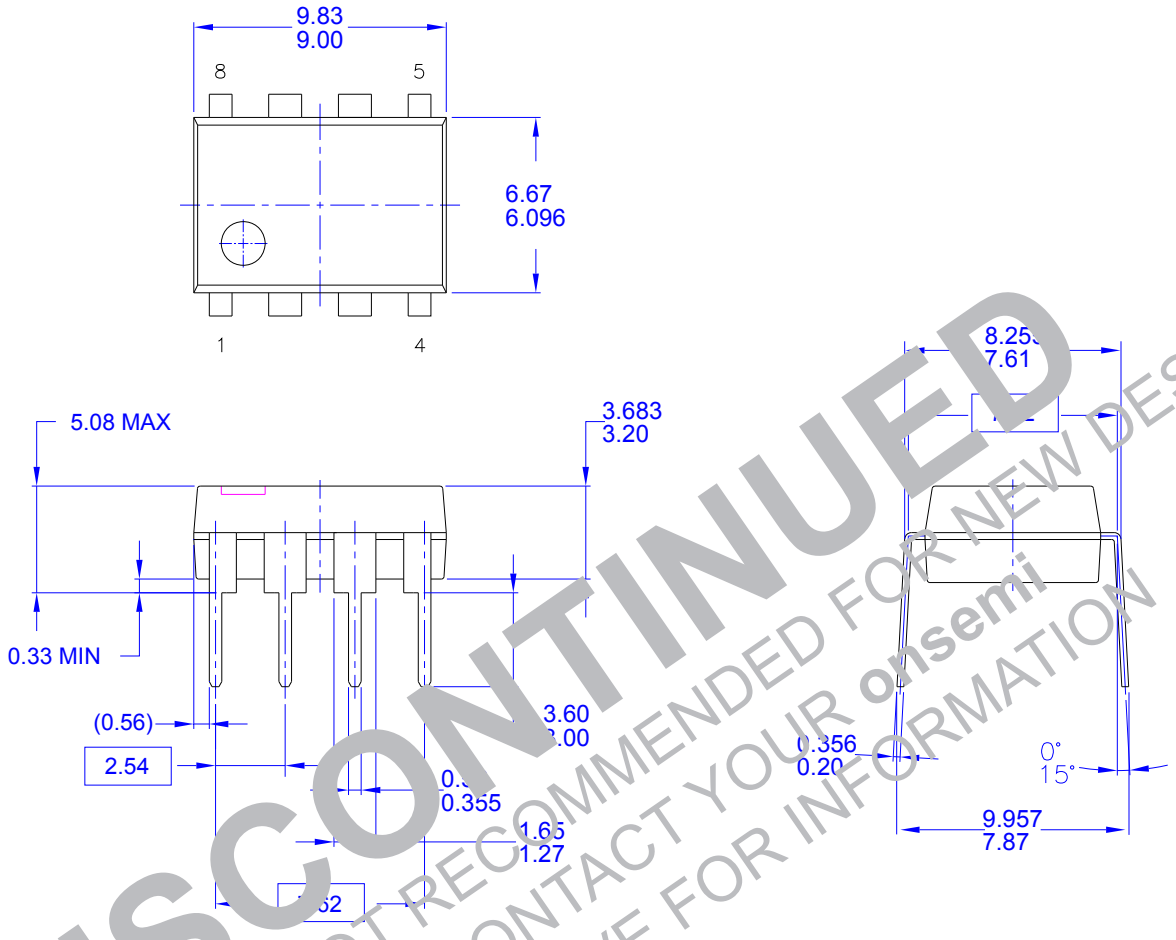

NOTES: UNLESS OTHERWISE SPECIFIED
A) THIS PACKAGE CONFORMS TO JEDEC MS-001 VARIATION BA
B) ALL DIMENSIONS ARE IN MILLIMETERS.
C) DIMENSIONS ARE EXCLUSIVE OF BURRS, MOLD FLASH, AND TIE BAR EXTRUSIONS.
D) DIMENSIONS AND TOLERANCES PER ASME Y14.5M-1994
E) DRAWING FILENAME AND REVSION: MKT-N08FREV2.

Figure 28. 8-Lead, MDIP, JEDEC MS-001, .300" Wide

DISCONTINUED
THIS DEVICE IS NOT RECOMMENDED FOR NEW DESIGN
PLEASE CONTACT YOUR onsemi REPRESENTATIVE FOR INFORMATION

DISCONTINUED
THIS DEVICE IS NOT RECOMMENDED FOR NEW DESIGN
PLEASE CONTACT YOUR onsemi
REPRESENTATIVE FOR INFORMATION

ON Semiconductor and ON are trademarks of Semiconductor Components Industries, LLC dba ON Semiconductor or its subsidiaries in the United States and/or other countries. ON Semiconductor owns the rights to a number of patents, trademarks, copyrights, trade secrets, and other intellectual property. A listing of ON Semiconductor's product/patent coverage may be accessed at www.onsemi.com/site/pdf/Patent−Marking.pdf. ON Semiconductor reserves the right to make changes without further notice to any products herein. ON Semiconductor makes no warranty, representation or guarantee regarding the suitability of its products for any particular purpose, nor does ON Semiconductor assume any liability arising out of the application or use of any product or circuit, and specifically disclaims any and all liability, including without limitation special, consequential or incidental damages. Buyer is responsible for its products and applications using ON Semiconductor products, including compliance with all laws, regulations and safety requirements or standards, regardless of any support or applications information provided by ON Semiconductor. "Typical" parameters which may be provided in ON Semiconductor data sheets and/or specifications can and do vary in different applications and actual performance may vary over time. All operating parameters, including "Typicals" must be validated for each customer application by customer's technical experts. ON Semiconductor does not convey any license under its patent rights nor the rights of others. ON Semiconductor products are not designed, intended, or authorized for use as a critical component in life support systems or any FDA Class 3 medical devices or medical devices with a same or similar classification in a foreign jurisdiction or any devices intended for implantation in the human body. Should Buyer purchase or use ON Semiconductor products for any such unintended or unauthorized application, Buyer shall indemnify and hold ON Semiconductor and its officers, employees, subsidiaries, affiliates, and distributors harmless against all claims, costs, damages, and expenses, and reasonable attorney fees arising out of, directly or indirectly, any claim of personal injury or death associated with such unintended or unauthorized use, even if such claim alleges that ON Semiconductor was negligent regarding the design or manufacture of the part. ON Semiconductor is an Equal Opportunity/Affirmative Action Employer. This literature is subject to all applicable copyright laws and is not for resale in any manner.

PUBLICATION ORDERING INFORMATION

LITERATURE FULFILLMENT:
Literature Distribution Center for ON Semiconductor
19521 E. 32nd Pkwy, Aurora, Colorado 80011 USA
Phone: 303−675−2175 or 800−344−3860 Toll Free USA/Canada
Fax: 303−675−2176 or 800−344−3867 Toll Free USA/Canada
Email: orderlit@onsemi.com

N. American Technical Support: 800−282−9855 Toll Free USA/Canada
Europe, Middle East and Africa Technical Support:
Phone: 421 33 790 2910

ON Semiconductor Website: **www.onsemi.com**

Order Literature: http://www.onsemi.com/orderlit

For additional information, please contact your local Sales Representative

ENTEGRECİ

Bu belge www.entegreci.com üzerinden sunulmaktadır.

Elektronik komponent tedarikinde Entegreci

Entegreci, Eskişehir merkezli, Türkiye geneline satış yapan bir elektronik komponent mağazasıdır. Entegreler (IC), mikrodenetleyiciler, transistörler, diyotlar, pasif elemanlar, konnektörler, modüller ve geliştirme kartları tek adetten seri üretim adetlerine kadar satılır. Ürün sayfalarında güncel stok durumunu, fiyatı ve datasheet bağlantısını bulabilirsiniz.

Parça koduyla arama

Üretici parça numarasını yazın; stok ve fiyatı hemen görün.

www.entegreci.com

Ürün kategorileri

Entegreden kapasitöre tüm elektronik komponent kategorileri.

Kategorilere göz atın

Üreticiler

Aradığınız üreticinin ürünlerini tek sayfada inceleyin.

Üreticileri görün

Toplu alım ve teklif

Listede olmayan ya da yüksek adetli parçalar için teklif isteyin.

Teklif isteyin

www.entegreci.com | **destek@entegreci.com** | **0850 305 90 34**

Entegreci is an online electronic components store based in Türkiye. Search by manufacturer part number to see stock, prices and datasheets for integrated circuits, microcontrollers, transistors, passive components and connectors, or request a quote for parts that are not listed.

Bu sayfa Entegreci tarafından eklenmiştir. Belgenin önceki sayfaları asıl yayıncısına aittir ve içeriği değiştirilmemiştir; en güncel sürüm için belgenin yayıncısına başvurun.