

Is Now Part of



ON Semiconductor®

To learn more about ON Semiconductor, please visit our website at
www.onsemi.com

Please note: As part of the Fairchild Semiconductor integration, some of the Fairchild orderable part numbers will need to change in order to meet ON Semiconductor's system requirements. Since the ON Semiconductor product management systems do not have the ability to manage part nomenclature that utilizes an underscore (_), the underscore (_) in the Fairchild part numbers will be changed to a dash (-). This document may contain device numbers with an underscore (_). Please check the ON Semiconductor website to verify the updated device numbers. The most current and up-to-date ordering information can be found at www.onsemi.com. Please email any questions regarding the system integration to Fairchild_questions@onsemi.com.

ON Semiconductor and the ON Semiconductor logo are trademarks of Semiconductor Components Industries, LLC dba ON Semiconductor or its subsidiaries in the United States and/or other countries. ON Semiconductor owns the rights to a number of patents, trademarks, copyrights, trade secrets, and other intellectual property. A listing of ON Semiconductor's product/patent coverage may be accessed at www.onsemi.com/site/pdf/Patent-Marking.pdf. ON Semiconductor reserves the right to make changes without further notice to any products herein. ON Semiconductor makes no warranty, representation or guarantee regarding the suitability of its products for any particular purpose, nor does ON Semiconductor assume any liability arising out of the application or use of any product or circuit, and specifically disclaims any and all liability, including without limitation special, consequential or incidental damages. Buyer is responsible for its products and applications using ON Semiconductor products, including compliance with all laws, regulations and safety requirements or standards, regardless of any support or applications information provided by ON Semiconductor. "Typical" parameters which may be provided in ON Semiconductor data sheets and/or specifications can and do vary in different applications and actual performance may vary over time. All operating parameters, including "Typicals" must be validated for each customer application by customer's technical experts. ON Semiconductor does not convey any license under its patent rights nor the rights of others. ON Semiconductor products are not designed, intended, or authorized for use as a critical component in life support systems or any FDA Class 3 medical devices or medical devices with a same or similar classification in a foreign jurisdiction or any devices intended for implantation in the human body. Should Buyer purchase or use ON Semiconductor products for any such unintended or unauthorized application, Buyer shall indemnify and hold ON Semiconductor and its officers, employees, subsidiaries, affiliates, and distributors harmless against all claims, costs, damages, and expenses, and reasonable attorney fees arising out of, directly or indirectly, any claim of personal injury or death associated with such unintended or unauthorized use, even if such claim alleges that ON Semiconductor was negligent regarding the design or manufacture of the part. ON Semiconductor is an Equal Opportunity/Affirmative Action Employer. This literature is subject to all applicable copyright laws and is not for resale in any manner.

FAIRCHILD SEMICONDUCTOR®

May 2012

FSL128MRT
Green-Mode Fairchild Power Switch (FPS™) for High Input Voltage

Features

- Internal Avalanched Rugged 800V SenseFET
- Advanced Soft Burst-Mode Operation for Low Standby Power and Low audible noise
- Under 40mW Standby Power Consumption at 265V_{AC} and No-load Condition
- Random Frequency Fluctuation for Low EMI
- Pulse-by-Pulse Current Limit
- Various Protection Functions: Overload Protection (OLP), Over-Voltage Protection (OVP), Abnormal Over-Current Protection (AOCP), Internal Thermal Shutdown (TSD) with Hysteresis and Under-Voltage Lockout (UVLO) with Hysteresis
- Low Operating Current(0.4mA) in Burst Mode
- Internal Startup Circuit
- Built-in Soft-Start: 15ms
- Auto-Restart Mode

Applications

- Power Supply for STB Home Appliances and Industrial for High AC Input

Description

The FSL128MRT is an integrated Pulse Width Modulation (PWM) controller and SenseFET specifically designed for offline Switch-Mode Power Supplies (SMPS) with minimal external components. The PWM controller includes an integrated fixed-frequency oscillator, Under-Voltage Lockout (UVLO), Leading-Edge Blanking (LEB), optimized gate driver, internal soft-start, temperature-compensated precise current sources for loop compensation, and self-protection circuitry. Compared with a discrete MOSFET and PWM controller solution, the FSL128MRT can reduce total cost, component count, size, and weight; while simultaneously increasing efficiency, productivity, and system reliability. This device provides a basic platform suited for cost-effective design of a flyback converter.

Ordering Information

Part Number	Package	Operating Junction Temperature	Current Limit	$R_{DS(ON)}$ (Max.)	Output Power Table[2]				Replaces Device
					230V_{AC} ± 15%[3]		85~265V_{AC}		
					Adapter[4]	Open Frame[5]	Adapter[4]	Open Frame[5]	
FSL128MRT	TO-220F 6-Lead[1] W-Forming	-40°C ~ +125°C	1.2A	7.3Ω	30W	40W	17W	25W	KA5M0280RY DTU

Notes:
1. Pb-free package per JEDEC J-STD-020B.
2. The junction temperature can limit the maximum output power.
3. 230V_{AC} or 100/115V_{AC} with voltage doubler.
4. Typical continuous power in a non-ventilated enclosed adapter measured at 50°C ambient temperature.
5. Maximum practical continuous power in an open-frame design at 50°C ambient temperature.

© 2012 Fairchild Semiconductor Corporation

Application Circuit

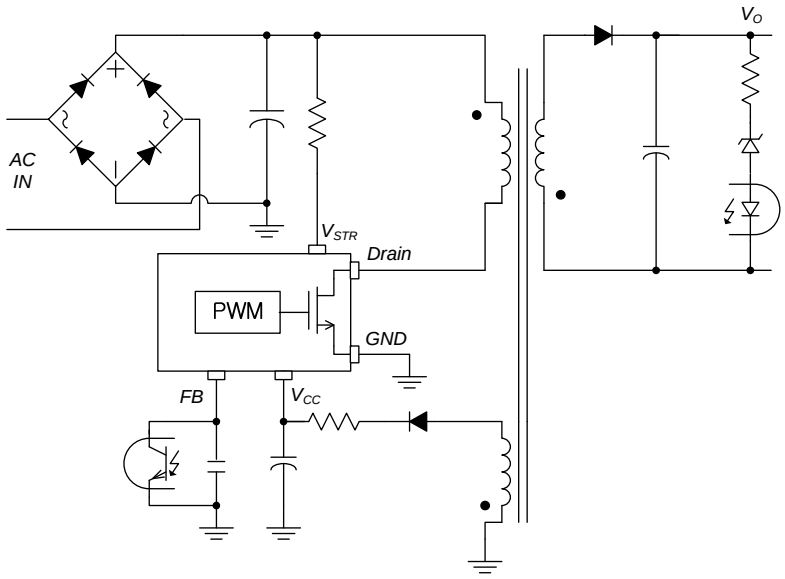

Figure 1. Typical Application Circuit

Internal Block Diagram

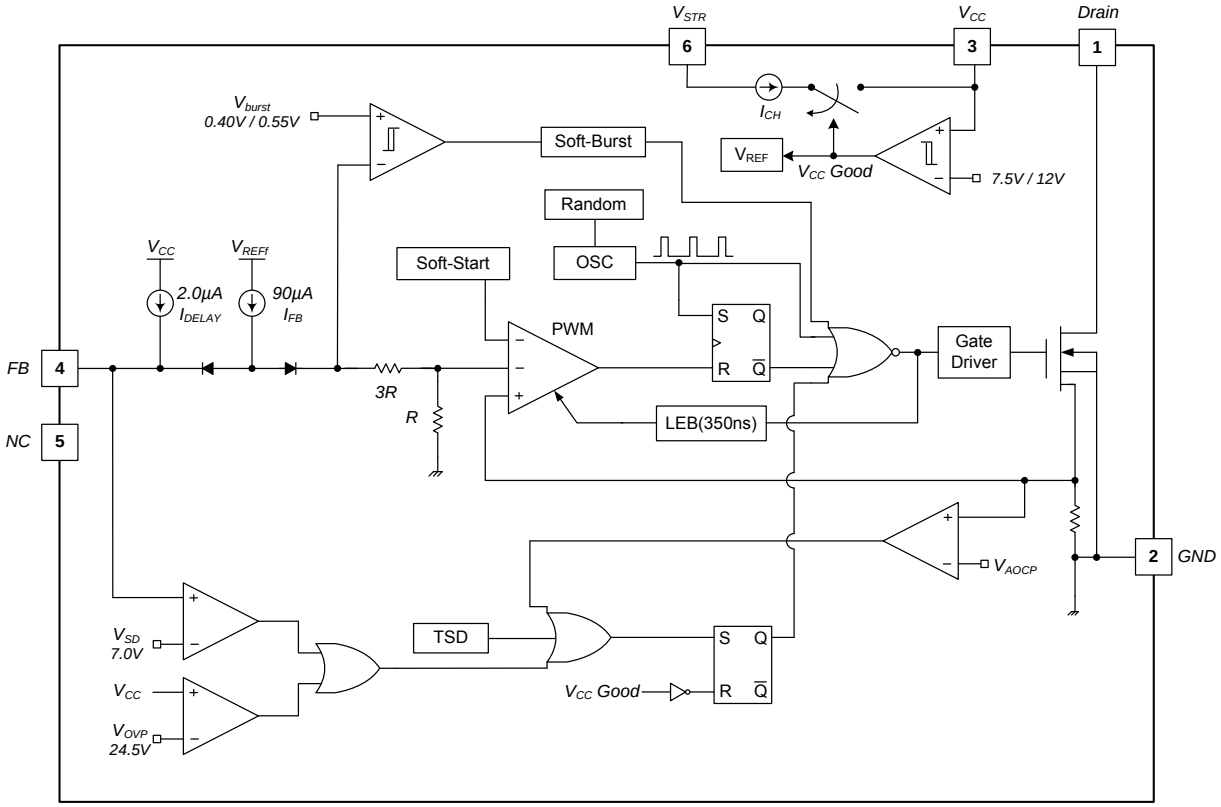

Figure 2. Internal Block Diagram

Pin Configuration

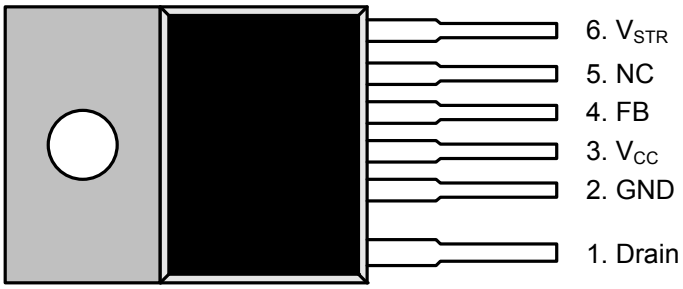

Figure 3. Pin Configuration (Top View)

Pin Definitions

Pin #	Name	Description
1	Drain	**SenseFET Drain**. High-voltage power SenseFET drain connection.
2	GND	**Ground**. This pin is the control ground and the SenseFET source.
3	V_{CC}	**Power Supply**. This pin is the positive supply input, which provides the internal operating current for both startup and steady-state operation.
4	FB	**Feedback**. This pin is internally connected to the inverting input of the PWM comparator. The collector of an opto-coupler is typically tied to this pin. For stable operation, a capacitor should be placed between this pin and GND. If the voltage of this pin reaches 7V, the overload protection triggers, which shuts down the FPS.
5	NC	**No Connection**
6	V_{STR}	**Startup**. This pin is connected directly, or through a resistor, to the high-voltage DC link. At startup, the internal high-voltage current source supplies internal bias and charges the external capacitor connected to the V_{CC} pin. Once V_{CC} reaches 12V, the internal current source (I_{CH}) is disabled.

© 2012 Fairchild Semiconductor Corporation

Absolute Maximum Ratings

Stresses exceeding the absolute maximum ratings may damage the device. The device may not function or be operable above the recommended operating conditions and stressing the parts to these levels is not recommended. In addition, extended exposure to stresses above the recommended operating conditions may affect device reliability. The absolute maximum ratings are stress ratings only.

Symbol	Parameter	Min.	Max.	Unit
V_{STR}	V_{STR} Pin Voltage		650	V
V_{DS}	Drain Pin Voltage		800	V
V_{CC}	V_{CC} Pin Voltage		26	V
V_{FB}	Feedback Pin Voltage	−0.3	10.0	V
I_{DM}	Drain Current Pulsed[6]		8	A
I_{DS}	Continuous Switching Drain Current		2	A
E_{AS}	Single Pulsed Avalanche Energy[7]		67	mJ
P_D	Total Power Dissipation (T_C=25°C)[8]		47	W
T_J	Maximum Junction Temperature		150	°C
	Operating Junction Temperature[9]	−40	+125	°C
T_{STG}	Storage Temperature	−55	+150	°C

Notes:

6. Repetitive peak switching current when the inductive load is assumed: Limited by maximum duty (D_{MAX}=0.74) and junction temperature *(see Figure 1)*.
7. L=10mH, starting T_J=25°C.
8. Infinite cooling condition *(refer to the SEMI G30-88)*.
9. Although this parameter guarantees IC operation, it does not guarantee all electrical characteristics.

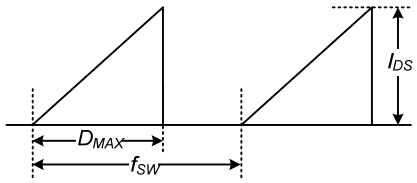

Figure 4. Repetitive Peak Switching Current

ESD Capability

Symbol	Parameter	Value	Unit
ESD	Human Body Model, JESD22-A114	4.5	KV
	Charged Device Model, JESD22-C101	2.0	

Thermal Impedance

T_A=25°C unless otherwise specified.

Symbol	Parameter	Value	Unit
θ_{JA}	Junction-to-Ambient Thermal Impedance[10]	63.5	°C/W
θ_{JC}	Junction-to-Case Thermal Impedance[11]	2.6	°C/W

Notes:

10. Free standing without heat sink under natural convection condition, per JEDEC 51-2 and 1-10.
11. Infinite cooling condition per Mil Std. 883C method 1012.1.

© 2012 Fairchild Semiconductor Corporation

Electrical Characteristics

Unless otherwise specified T_J = 25°C.

Symbol	Parameter	Conditions	Min.	Typ.	Max.	Unit
SenseFET Section						
BV_{DSS}	Drain-Source Breakdown Voltage	V_{CC}=0V, I_D=250μA	800			V
I_{DSS}	Zero-Gate-Voltage Drain Current	V_{DS}=640V, T_A=125°C			250	μA
$R_{DS(ON)}$	Drain-Source On-State Resistance	V_{GS}=10V, I_D=1A		6.3	7.3	Ω
C_{ISS}	Input Capacitance[12]	V_{DS}=25V, V_{GS}=0V, f=1MHz		275		pF
C_{OSS}	Output Capacitance[12]	V_{DS}=25V, V_{GS}=0V, f=1MHz		39		pF
C_{RSS}	Reverse Transfer Capacitance[12]	V_{DS}=25V, V_{GS}=0V, f=1MHz		4.1		pF
t_r	Rise Time	V_{DS}=400V, I_D=2A, R_G=25Ω		24.3		ns
t_f	Fall Time	V_{DS}=400V, I_D=2A, R_G=25Ω		28.7		ns
$t_{d(on)}$	Turn-On Delay	V_{DS}=400V, I_D=2A, R_G=25Ω		13		ns
$t_{d(off)}$	Turn-Off Delay	V_{DS}=400V, I_D=2A, R_G=25Ω		20		ns
Control Section						
f_S	Switching Frequency[12]	V_{CC}=14V, V_{FB}=4V	61	67	73	kHz
Δf_S	Switching Frequency Variation[12]	−25°C < T_J < 125°C		±5	±10	%
D_{MAX}	Maximum Duty Ratio	V_{CC}=14V, V_{FB}=4V	61	67	73	%
D_{MIN}	Minimum Duty Ratio	V_{CC}=14V, V_{FB}=0V			0	%
I_{FB}	Feedback Source Current	V_{FB}=0	65	90	115	μA
V_{START}	UVLO Threshold Voltage	V_{FB}=0V, V_{CC} Sweep	11	12	13	V
V_{STOP}		After Turn-on, V_{FB}=0V	7.0	7.5	8.0	V
$t_{S/S}$	Internal Soft-Start Time	V_{CC} Sweep		15		ms
Burst-Mode Section						
V_{BURH}	Burst-Mode Voltage	V_{CC}=14V, V_{FB} Sweep	0.46	0.55	0.66	V
V_{BURL}			0.33	0.40	0.48	V
Hys				150		mV
Protection Section						
I_{LIM}	Peak Drain Current Limit	di/dt=300mA/μs	1.05	1.20	1.34	A
V_{SD}	Shutdown Feedback Voltage	V_{CC}=14V, V_{FB} Sweep	6.45	7.00	7.55	V
I_{DELAY}	Shutdown Delay Current	V_{CC}=14V, V_{FB}=4V	1.2	2.0	2.8	μA
t_{LEB}	Leading-Edge Blanking Time[12][14]			350		ns
V_{OVP}	Over-Voltage Protection	V_{CC} Sweep	23.0	24.5	26.0	V
T_{SD}	Thermal Shutdown Temperature[12]	Shutdown Temperature	130	140	150	°C
Hys		Hysteresis		60		°C

Continued on the following page…

© 2012 Fairchild Semiconductor Corporation

Electrical Characteristics (Continued)

Unless otherwise specified T_J = 25°C.

Symbol	Parameter	Conditions	Min.	Typ.	Max.	Unit
Total Device Section						
I_{OP}	Operating Supply Current, (Control Part in Burst Mode)	V_{CC}=14V, V_{FB}=0V	0.3	0.4	0.5	mA
I_{OPS}	Operating Switching Current, (Control Part and SenseFET Part)	V_{CC}=14V, V_{FB}=2V		1.0	1.4	mA
I_{START}	Start Current	V_{CC}=11V (Before V_{CC} Reaches V_{START})	85	120	155	μA
I_{CH}	Startup Charging Current	V_{CC}=V_{FB}=0V, V_{STR}=40V	0.7	1.0	1.3	mA
V_{STR}	Minimum V_{STR} Supply Voltage	V_{CC}=V_{FB}=0V, V_{STR} Sweep		26		V

Notes:
12. Although these parameters are guaranteed, they are not 100% tested in production.
13. Average value
14. t_{LEB} includes gate turn-on time.

Comparison of KA5M0280R and FSL128MRT

Function	KA5M0280RYDTU	FSL128MRT	Advantages of FSL128MRT
Random Frequency Fluctuation	N/A	Built−in	Low EMI
Operating Current	7mA	0.4mA	Very low stand-by power
High-Voltage Startup Circuit	N/A	Built−in	
Protections	OLP OVP TSD	OLP OVP AOCP TSD with Hysteresis	Enhanced protections and high reliability
Power Balance	Long T_{CLD}	Very Short T_{CLD}	The difference of input power between the low and high input voltage is quite small

© 2012 Fairchild Semiconductor Corporation

Typical Performance Characteristics

Characteristic graphs are normalized at T_A=25°C.

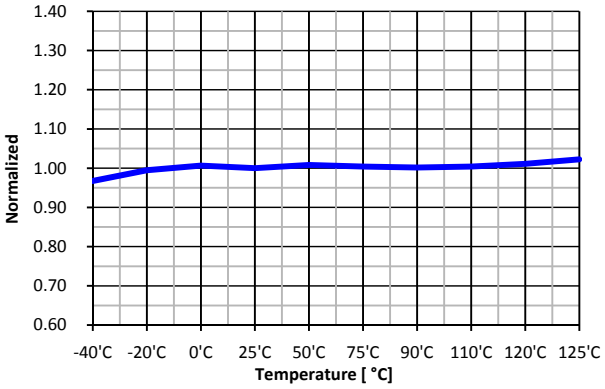

Figure 5. Operating Supply Current (I_{OP}) vs. T_A

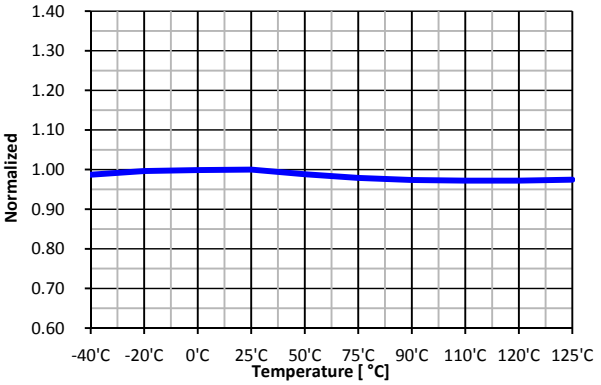

Figure 6. Operating Switching Current (I_{OPS}) vs. T_A

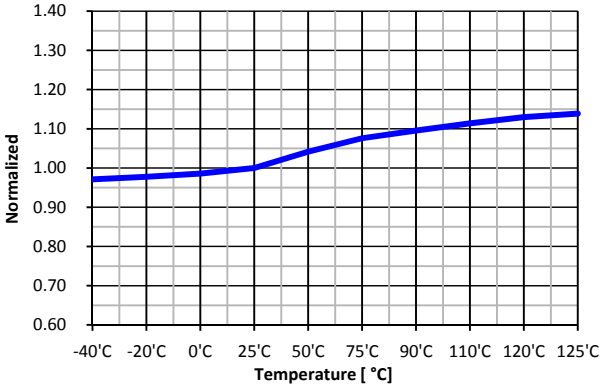

Figure 7. Startup Charging Current (I_{CH}) vs. T_A

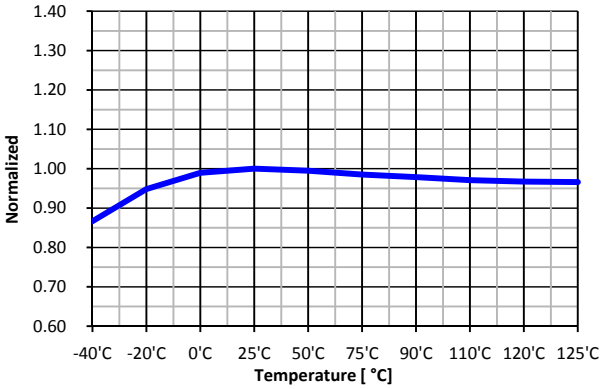

Figure 8. Peak Drain Current Limit (I_{LIM}) vs. T_A

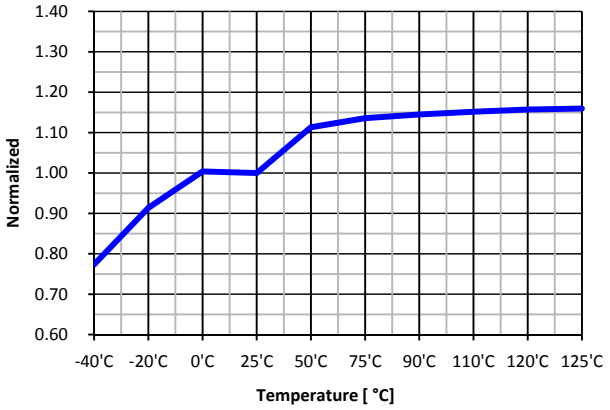

Figure 9. Feedback Source Current (I_{FB}) vs. T_A

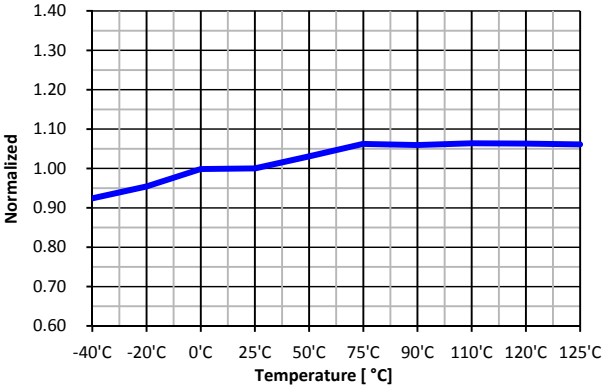

Figure 10. Shutdown Delay Current (I_{DELAY}) vs. T_A

Typical Performance Characteristics

Characteristic graphs are normalized at T_A=25°C.

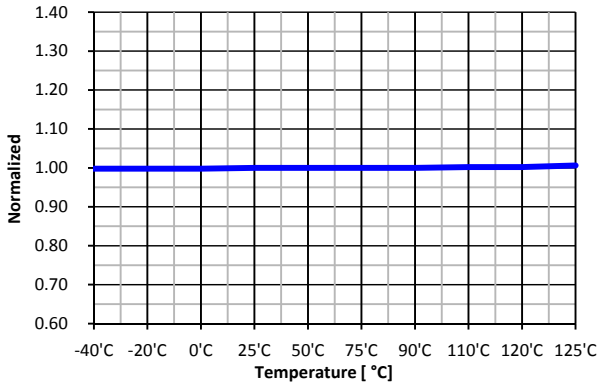

Figure 11. UVLO Threshold Voltage (V_{START}) vs. T_A

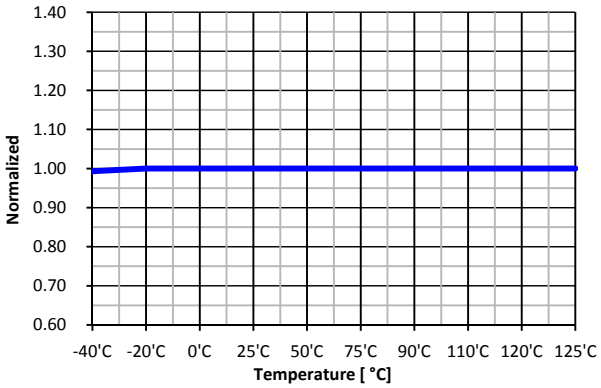

Figure 12. UVLO Threshold Voltage (V_{STOP}) vs. T_A

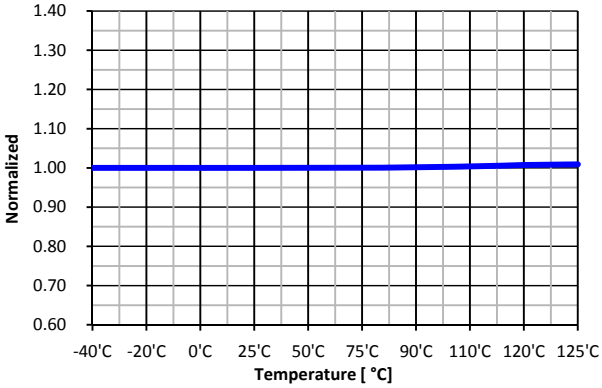

Figure 13. Shutdown Feedback Voltage (V_{SD}) vs. T_A

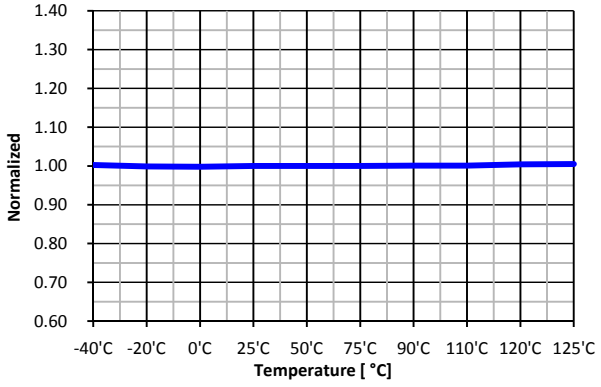

Figure 14. Over-Voltage Protection (V_{OVP}) vs. T_A

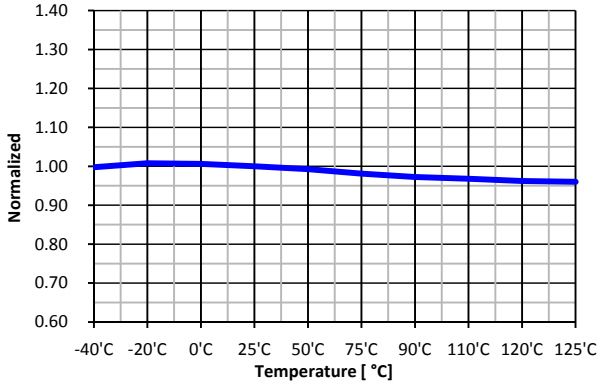

Figure 15. Switching Frequency (f_S) vs. T_A

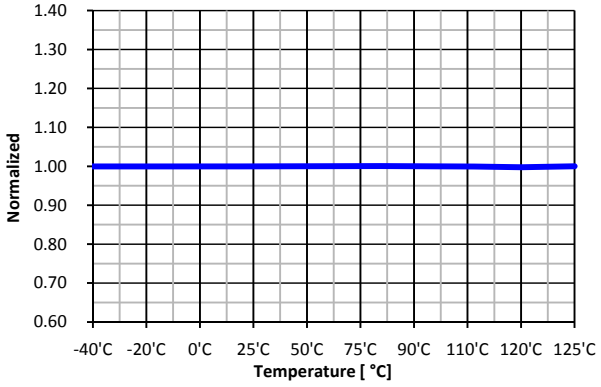

Figure 16. Maximim Duty Ratio (D_{MAX}) vs. T_A

Functional Description

1. Startup: At startup, an internal high-voltage current source supplies the internal bias and charges the external capacitor (C_{VCC}) connected to the V_{CC} pin, as illustrated in Figure 17. When V_{CC} reaches 12V, the FSL128MRT begins switching and the internal high-voltage current source is disabled. Normal switching operation continues and the power is supplied from the auxiliary transformer winding unless V_{CC} goes below the stop voltage of 7.5V.

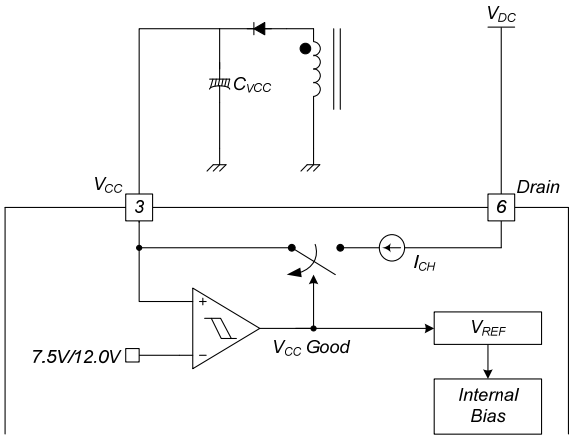

Figure 17. Startup Block

2. Soft-Start: The internal soft-start circuit increases PWM comparator inverting input voltage, together with the SenseFET current, slowly after startup. The typical soft-start time is 15ms. The pulse width to the power switching device is progressively increased to establish the correct working conditions for the transformers, inductors, and capacitors. The voltage on the output capacitors is progressively increased to smoothly establish the required output voltage. This helps prevent transformer saturation and reduces stress on the secondary diode during startup.

3. Feedback Control: This device employs Current-Mode control, as shown in Figure 18. An opto-coupler (such as the FOD817) and shunt regulator (such as the KA431) are typically used to implement the feedback network. Comparing the feedback voltage with the voltage across the R_{SENSE} resistor makes it possible to control the switching duty cycle. When the reference pin voltage of the shunt regulator exceeds the internal reference voltage of 2.5V, the opto-coupler LED current increases, pulling down the feedback voltage and reducing drain current. This typically occurs when the input voltage is increased or the output load is decreased.

3.1 Pulse-by-Pulse Current Limit: Because Current-Mode control is employed, the peak current through the SenseFET is limited by the inverting input of PWM comparator (V_{FB}*), as shown in Figure 18. Assuming that the 90μA current source flows only through the internal resistor (3R + R =27kΩ), the cathode voltage of diode D2 is about 2.4V. Since D1 is blocked when the feedback voltage (V_{FB}) exceeds 2.4V, the maximum voltage of the cathode of D2 is clamped at this voltage. Therefore, the peak value of the current through the SenseFET is limited.

3.2 Leading-Edge Blanking (LEB): At the instant the internal SenseFET is turned on, a high-current spike usually occurs through the SenseFET, caused by primary-side capacitance and secondary-side rectifier reverse recovery. Excessive voltage across the R_{SENSE} resistor leads to incorrect feedback operation in the Current-Mode PWM control. To counter this effect, the leading-edge blanking (LEB) circuit inhibits the PWM comparator for t_{LEB} (350ns) after the SenseFET is turned on.

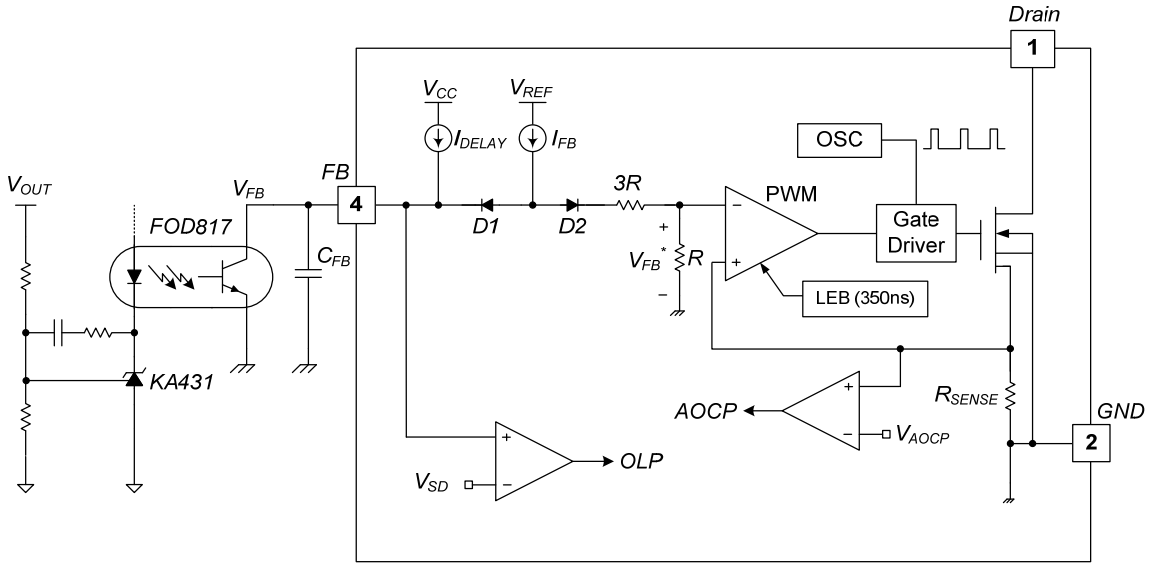

Figure 18. Pulse Width Modulation Circuit

4. Protection Circuits: The FSL128MRT has several self-protective functions, such as Overload Protection (OLP), Abnormal Over-Current Protection (AOCP), Over-Voltage Protection (OVP), and Thermal Shutdown (TSD). All the protections are implemented as auto-restart. Once the fault condition is detected, switching is terminated and the SenseFET remains off. This causes V_{CC} to fall. When V_{CC} falls to the Under-Voltage Lockout (UVLO) stop voltage of 7.5V, the protection is reset and the startup circuit charges the V_{CC} capacitor. When V_{CC} reaches the start voltage of 12.0V, the FSL128MRT resumes normal operation. If the fault condition is not removed, the SenseFET remains off and V_{CC} drops to stop voltage again. In this manner, the auto-restart can alternately enable and disable the switching of the power SenseFET until the fault condition is eliminated. Because these protection circuits are fully integrated into the IC without external components, reliability is improved without increasing cost.

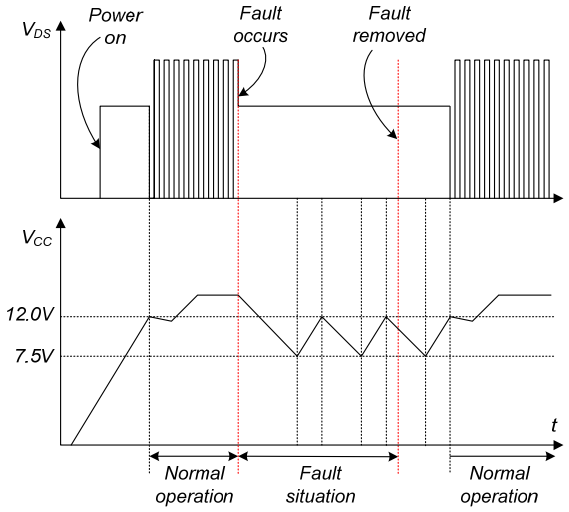

Figure 19. Auto-Restart Protection Waveforms

4.1 Overload Protection (OLP): Overload is defined as the load current exceeding its normal level due to an unexpected abnormal event. In this situation, the protection circuit should trigger to protect the SMPS. However, even when the SMPS is in normal operation, the overload protection circuit can be triggered during the load transition. To avoid this undesired operation, the overload protection circuit is designed to trigger only after a specified time to determine whether it is a transient situation or a true overload situation. Because of the pulse-by-pulse current-limit capability, the maximum peak current through the SenseFET is limited and, therefore, the maximum input power is restricted with a given input voltage. If the output consumes more than this maximum power, the output voltage (V_{OUT}) decreases below the set voltage. This reduces the current through the opto-coupler LED, which also reduces the opto-coupler transistor current, increasing the feedback voltage (V_{FB}). If V_{FB} exceeds 2.4V, D1 is blocked and the 2.0μA current source starts to charge C_{FB} slowly up. In this condition, V_{FB} continues increasing until it reaches 7.0V, when the switching operation is terminated, as shown in Figure 20. The delay for shutdown is the time required to charge C_{FB} from 2.4V to 7.0V with 2.0μA. This protection is implemented in Auto-Restart Mode.

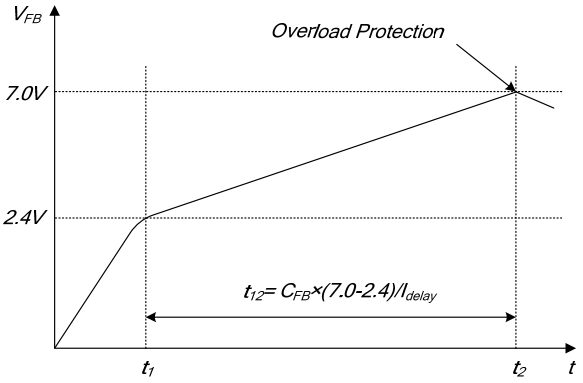

Figure 20. Overload Protection

4.2 Abnormal Over-Current Protection (AOCP): When the secondary rectifier diodes or the transformer pins are shorted, a steep current with extremely high di/dt can flow through the SenseFET during the minimum turn-on time. Even though the FSL128MRT has overload protection, it is not enough to protect in that abnormal case; due to the severe current stress imposed on the SenseFET until OLP is triggered. The internal AOCP circuit is shown in Figure 21. When the gate turn-on signal is applied to the power SenseFET, the AOCP block is enabled and monitors the current through the sensing resistor. The voltage across the resistor is compared with a preset AOCP level. If the sensing resistor voltage is greater than the AOCP level, the set signal is applied to the S−R latch, resulting in the shutdown of the SMPS.

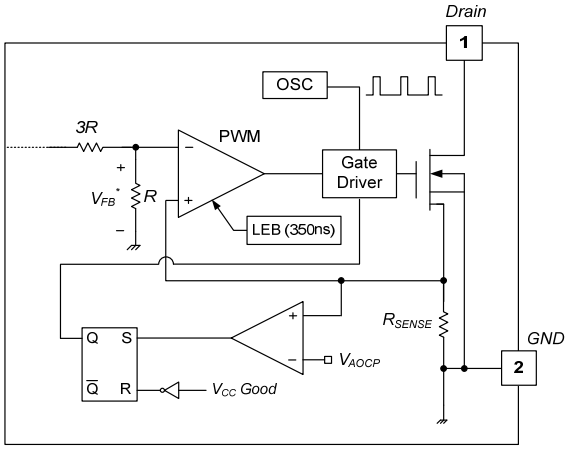

Figure 21. Abnormal Over-Current Protection

4.4 Over-Voltage Protection (OVP): If the secondary-side feedback circuit malfunctions or a solder defect causes an opening in the feedback path, the current through the opto-coupler transistor becomes almost zero. Then V_{FB} climbs up in a similar manner to the overload situation, forcing the preset maximum current to be supplied to the SMPS until the overload protection is triggered. Because more energy than required is provided to the output, the output voltage may exceed the rated voltage before the overload protection is triggered, resulting in the breakdown of the devices in the secondary side. To prevent this situation, an OVP circuit is employed. In general, the V_{CC} is proportional to the output voltage and the FS136MRT uses V_{CC} instead of directly monitoring the output voltage. If V_{CC} exceeds 24.5V, an OVP circuit is triggered, resulting in the termination of the switching operation. To avoid undesired activation of OVP during normal operation, V_{CC} should be designed to be below 24.5V.

4.5 Thermal Shutdown (TSD): The SenseFET and the control IC on a die in one package makes it easier for the control IC to detect the over temperature of the SenseFET. If the temperature exceeds 140°C, the thermal shutdown is triggered and stops operation. The FSL128MRT operates in Auto-Restart Mode until the temperature decreases to around 80°C, when normal operation resumes.

5. Soft Burst-Mode Operation: To minimize power dissipation in Standby Mode, the FSL128MRT enters Burst-Mode operation. As the load decreases, the feedback voltage decreases. The device automatically enters Burst Mode when the feedback voltage drops below V_{BURL} (400mV), as shown in Figure 22. At this point, switching stops and the output voltages start to drop at a rate dependent on standby current load. This causes the feedback voltage to rise. Once it passes V_{BURH} (550mV), switching resumes. The feedback voltage then falls and the process repeats. Burst Mode alternately enables and disables switching of the SenseFET, reducing switching loss in Standby Mode.

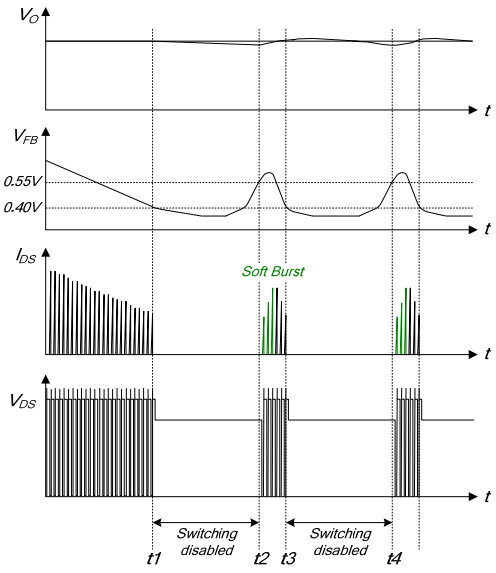

Figure 22. Burst-Mode Operation

6. Random Frequency Fluctuation (RFF): Fluctuating switching frequency of an SMPS can reduce EMI by spreading the energy over a wide frequency range. The amount of EMI reduction is directly related to the switching frequency variation, which is limited internally. The switching frequency is determined randomly by external feedback voltage and an internal free-running oscillator at every switching instant. This random frequency fluctuation scatters the EMI noise around typical switching frequency (67kHz) effectively and can reduce the cost of the input filter included to meet the EMI requirements (e.g. EN55022).

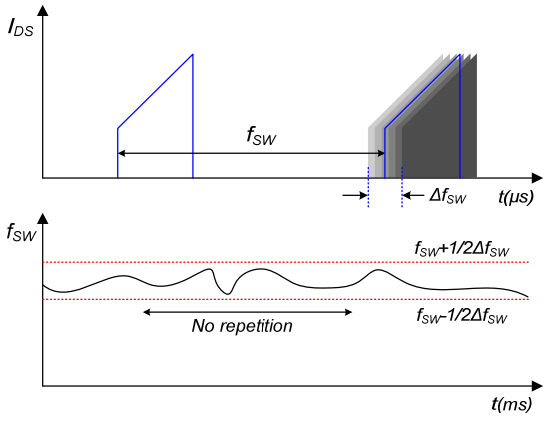

Figure 23. Random Frequency Fluctuation

© 2012 Fairchild Semiconductor Corporation

Physical Dimensions

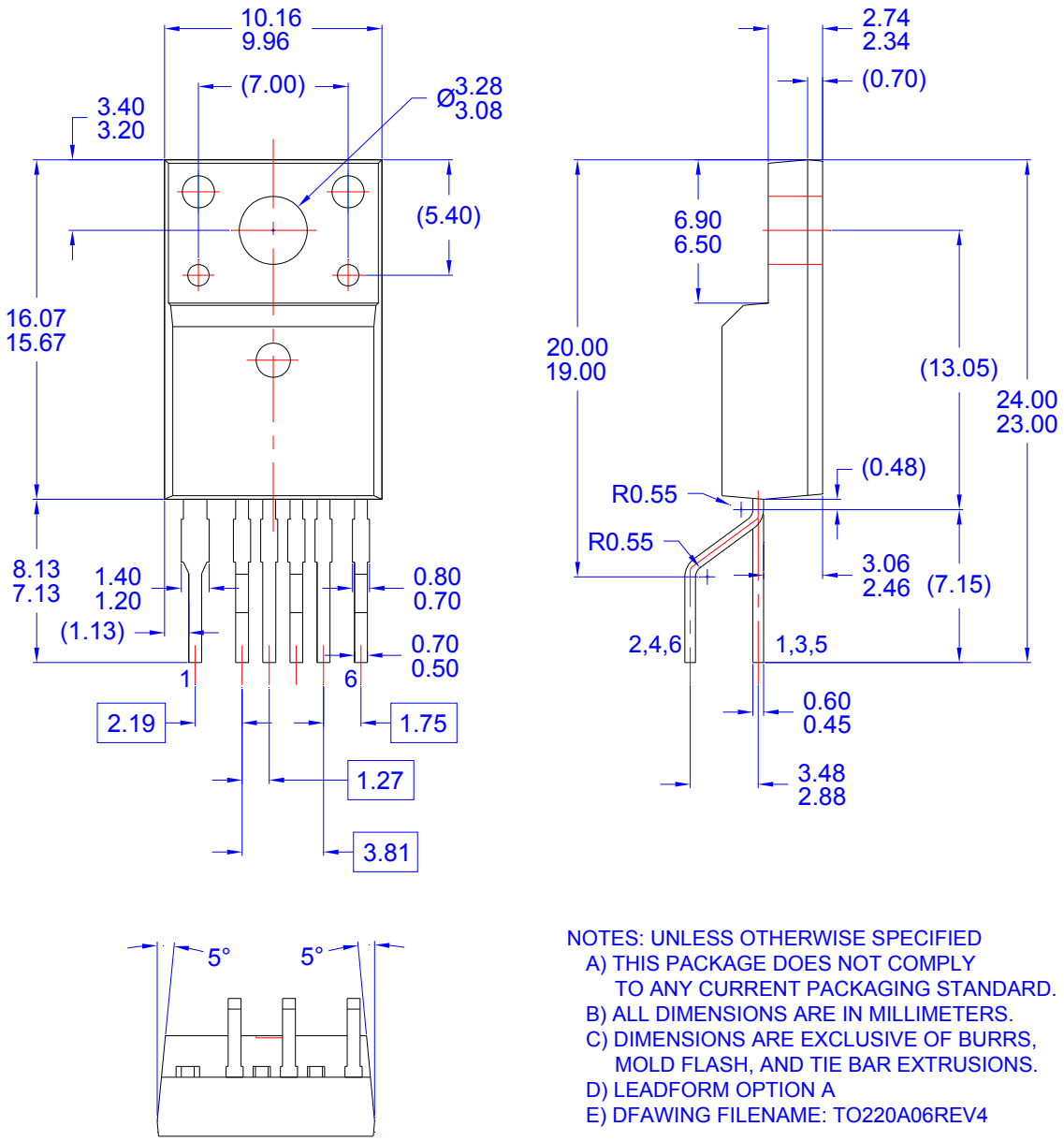

Figure 24. TO−220F−6L (W−Forming)

Package drawings are provided as a service to customers considering Fairchild components. Drawings may change in any manner without notice. Please note the revision and/or date on the drawing and contact a Fairchild Semiconductor representative to verify or obtain the most recent revision. Package specifications do not expand the terms of Fairchild's worldwide terms and conditions, specifically the warranty therein, which covers Fairchild products.

Always visit Fairchild Semiconductor's online packaging area for the most recent package drawings:
http://www.fairchildsemi.com/packaging/.

FAIRCHILD SEMICONDUCTOR®

TRADEMARKS

The following includes registered and unregistered trademarks and service marks, owned by Fairchild Semiconductor and/or its global subsidiaries, and is not intended to be an exhaustive list of all such trademarks.

2Cool™
AccuPower™
AX-CAP™*
BitSiC™
Build it Now™
CorePLUS™
CorePOWER™
CROSSVOLT™
CTL™
Current Transfer Logic™
DEUXPEED®
Dual Cool™
EcoSPARK®
EfficientMax™
ESBC™
Fairchild®
Fairchild Semiconductor®
FACT Quiet Series™
FACT®
FAST®
FastvCore™
FETBench™
FlashWriter®*
FPS™
F-PFS™
FRFET®
Global Power Resource℠
GreenBridge™
Green FPS™
Green FPS™ e-Series™
Gmax™
GTO™
IntelliMAX™
ISOPLANAR™
Making Small Speakers Sound Louder and Better™
MegaBuck™
MICROCOUPLER™
MicroFET™
MicroPak™
MicroPak2™
MillerDrive™
MotionMax™
mWSaver™
OptoHiT™
OPTOLOGIC®
OPTOPLANAR®
PowerTrench®
PowerXS™
Programmable Active Droop™
QFET®
QS™
Quiet Series™
RapidConfigure™
Saving our world, 1mW/W/kW at a time™
SignalWise™
SmartMax™
SMART START™
Solutions for Your Success™
SPM®
STEALTH™
SuperFET®
SuperSOT™-3
SuperSOT™-6
SuperSOT™-8
SupreMOS®
SyncFET™
Sync-Lock™
SYSTEM GENERAL®*
The Power Franchise®
the power franchise
TinyBoost™
TinyBuck™
TinyCalc™
TinyLogic®
TINYOPTO™
TinyPower™
TinyPWM™
TinyWire™
TranSiC™
TriFault Detect™
TRUECURRENT®*
μSerDes™
SerDes
UHC®
Ultra FRFET™
UniFET™
VCX™
VisualMax™
VoltagePlus™
XS™

* Trademarks of System General Corporation, used under license by Fairchild Semiconductor.

DISCLAIMER

FAIRCHILD SEMICONDUCTOR RESERVES THE RIGHT TO MAKE CHANGES WITHOUT FURTHER NOTICE TO ANY PRODUCTS HEREIN TO IMPROVE RELIABILITY, FUNCTION, OR DESIGN. FAIRCHILD DOES NOT ASSUME ANY LIABILITY ARISING OUT OF THE APPLICATION OR USE OF ANY PRODUCT OR CIRCUIT DESCRIBED HEREIN; NEITHER DOES IT CONVEY ANY LICENSE UNDER ITS PATENT RIGHTS, NOR THE RIGHTS OF OTHERS. THESE SPECIFICATIONS DO NOT EXPAND THE TERMS OF FAIRCHILD'S WORLDWIDE TERMS AND CONDITIONS, SPECIFICALLY THE WARRANTY THEREIN, WHICH COVERS THESE PRODUCTS.

LIFE SUPPORT POLICY

FAIRCHILD'S PRODUCTS ARE NOT AUTHORIZED FOR USE AS CRITICAL COMPONENTS IN LIFE SUPPORT DEVICES OR SYSTEMS WITHOUT THE EXPRESS WRITTEN APPROVAL OF FAIRCHILD SEMICONDUCTOR CORPORATION.

As used herein:

1. Life support devices or systems are devices or systems which, (a) are intended for surgical implant into the body or (b) support or sustain life, and (c) whose failure to perform when properly used in accordance with instructions for use provided in the labeling, can be reasonably expected to result in a significant injury of the user.
2. A critical component in any component of a life support, device, or system whose failure to perform can be reasonably expected to cause the failure of the life support device or system, or to affect its safety or effectiveness.

ANTI-COUNTERFEITING POLICY

Fairchild Semiconductor Corporation's Anti-Counterfeiting Policy. Fairchild's Anti-Counterfeiting Policy is also stated on our external website, www.fairchildsemi.com, under Sales Support.

Counterfeiting of semiconductor parts is a growing problem in the industry. All manufacturers of semiconductor products are experiencing counterfeiting of their parts. Customers who inadvertently purchase counterfeit parts experience many problems such as loss of brand reputation, substandard performance, failed applications, and increased cost of production and manufacturing delays. Fairchild is taking strong measures to protect ourselves and our customers from the proliferation of counterfeit parts. Fairchild strongly encourages customers to purchase Fairchild parts either directly from Fairchild or from Authorized Fairchild Distributors who are listed by country on our web page cited above. Products customers buy either from Fairchild directly or from Authorized Fairchild Distributors are genuine parts, have full traceability, meet Fairchild's quality standards for handling and storage and provide access to Fairchild's full range of up-to-date technical and product information. Fairchild and our Authorized Distributors will stand behind all warranties and will appropriately address any warranty issues that may arise. Fairchild will not provide any warranty coverage or other assistance for parts bought from Unauthorized Sources. Fairchild is committed to combat this global problem and encourage our customers to do their part in stopping this practice by buying direct or from authorized distributors.

PRODUCT STATUS DEFINITIONS

Definition of Terms

Datasheet Identification	Product Status	Definition
Advance Information	Formative / In Design	Datasheet contains the design specifications for product development. Specifications may change in any manner without notice.
Preliminary	First Production	Datasheet contains preliminary data; supplementary data will be published at a later date. Fairchild Semiconductor reserves the right to make changes at any time without notice to improve design.
No Identification Needed	Full Production	Datasheet contains final specifications. Fairchild Semiconductor reserves the right to make changes at any time without notice to improve the design.
Obsolete	Not In Production	Datasheet contains specifications on a product that is discontinued by Fairchild Semiconductor. The datasheet is for reference information only.

Rev. I62

© 2012 Fairchild Semiconductor Corporation

ON Semiconductor and ON are trademarks of Semiconductor Components Industries, LLC dba ON Semiconductor or its subsidiaries in the United States and/or other countries. ON Semiconductor owns the rights to a number of patents, trademarks, copyrights, trade secrets, and other intellectual property. A listing of ON Semiconductor's product/patent coverage may be accessed at www.onsemi.com/site/pdf/Patent−Marking.pdf. ON Semiconductor reserves the right to make changes without further notice to any products herein. ON Semiconductor makes no warranty, representation or guarantee regarding the suitability of its products for any particular purpose, nor does ON Semiconductor assume any liability arising out of the application or use of any product or circuit, and specifically disclaims any and all liability, including without limitation special, consequential or incidental damages. Buyer is responsible for its products and applications using ON Semiconductor products, including compliance with all laws, regulations and safety requirements or standards, regardless of any support or applications information provided by ON Semiconductor. "Typical" parameters which may be provided in ON Semiconductor data sheets and/or specifications can and do vary in different applications and actual performance may vary over time. All operating parameters, including "Typicals" must be validated for each customer application by customer's technical experts. ON Semiconductor does not convey any license under its patent rights nor the rights of others. ON Semiconductor products are not designed, intended, or authorized for use as a critical component in life support systems or any FDA Class 3 medical devices or medical devices with a same or similar classification in a foreign jurisdiction or any devices intended for implantation in the human body. Should Buyer purchase or use ON Semiconductor products for any such unintended or unauthorized application, Buyer shall indemnify and hold ON Semiconductor and its officers, employees, subsidiaries, affiliates, and distributors harmless against all claims, costs, damages, and expenses, and reasonable attorney fees arising out of, directly or indirectly, any claim of personal injury or death associated with such unintended or unauthorized use, even if such claim alleges that ON Semiconductor was negligent regarding the design or manufacture of the part. ON Semiconductor is an Equal Opportunity/Affirmative Action Employer. This literature is subject to all applicable copyright laws and is not for resale in any manner.

PUBLICATION ORDERING INFORMATION

LITERATURE FULFILLMENT:
Literature Distribution Center for ON Semiconductor
19521 E. 32nd Pkwy, Aurora, Colorado 80011 USA
Phone: 303−675−2175 or 800−344−3860 Toll Free USA/Canada
Fax: 303−675−2176 or 800−344−3867 Toll Free USA/Canada
Email: orderlit@onsemi.com

N. American Technical Support: 800−282−9855 Toll Free USA/Canada
Europe, Middle East and Africa Technical Support:
Phone: 421 33 790 2910
Japan Customer Focus Center
Phone: 81−3−5817−1050

ON Semiconductor Website: **www.onsemi.com**

Order Literature: http://www.onsemi.com/orderlit

For additional information, please contact your local Sales Representative

ENTEGRECİ

Bu belge www.entegreci.com üzerinden sunulmaktadır.

Elektronik komponent tedarikinde Entegreci

Entegreci, Eskişehir merkezli, Türkiye geneline satış yapan bir elektronik komponent mağazasıdır. Entegreler (IC), mikrodenetleyiciler, transistörler, diyotlar, pasif elemanlar, konnektörler, modüller ve geliştirme kartları tek adetten seri üretim adetlerine kadar satılır. Ürün sayfalarında güncel stok durumunu, fiyatı ve datasheet bağlantısını bulabilirsiniz.

Parça koduyla arama

Üretici parça numarasını yazın; stok ve fiyatı hemen görün.

www.entegreci.com

Ürün kategorileri

Entegreden kapasitöre tüm elektronik komponent kategorileri.

Kategorilere göz atın

Üreticiler

Aradığınız üreticinin ürünlerini tek sayfada inceleyin.

Üreticileri görün

Toplu alım ve teklif

Listede olmayan ya da yüksek adetli parçalar için teklif isteyin.

Teklif isteyin

www.entegreci.com | **destek@entegreci.com** | **0850 305 90 34**

Entegreci is an online electronic components store based in Türkiye. Search by manufacturer part number to see stock, prices and datasheets for integrated circuits, microcontrollers, transistors, passive components and connectors, or request a quote for parts that are not listed.

Bu sayfa Entegreci tarafından eklenmiştir. Belgenin önceki sayfaları asıl yayıncısına aittir ve içeriği değiştirilmemiştir; en güncel sürüm için belgenin yayıncısına başvurun.