ON Semiconductor

Is Now



To learn more about onsemi™, please visit our website at
www.onsemi.com

DISCONTINUED
THIS DEVICE IS NOT RECOMMENDED FOR NEW DESIGN
PLEASE CONTACT YOUR onsemi
REPRESENTATIVE FOR INFORMATION

onsemi and onsemi and other names, marks, and brands are registered and/or common law trademarks of Semiconductor Components Industries, LLC dba "**onsemi**" or its affiliates and/or subsidiaries in the United States and/or other countries. **onsemi** owns the rights to a number of patents, trademarks, copyrights, trade secrets, and other intellectual property. A listing of **onsemi** product/patent coverage may be accessed at www.onsemi.com/site/pdf/Patent-Marking.pdf. **onsemi** reserves the right to make changes at any time to any products or information herein, without notice. The information herein is provided "as-is" and **onsemi** makes no warranty, representation or guarantee regarding the accuracy of the information, product features, availability, functionality, or suitability of its products for any particular purpose, nor does **onsemi** assume any liability arising out of the application or use of any product or circuit, and specifically disclaims any and all liability, including without limitation special, consequential or incidental damages. Buyer is responsible for its products and applications using **onsemi** products, including compliance with all laws, regulations and safety requirements or standards, regardless of any support or applications information provided by **onsemi**. "Typical" parameters which may be provided in **onsemi** data sheets and/or specifications can and do vary in different applications and actual performance may vary over time. All operating parameters, including "Typicals" must be validated for each customer application by customer's technical experts. **onsemi** does not convey any license under any of its intellectual property rights nor the rights of others. **onsemi** products are not designed, intended, or authorized for use as a critical component in life support systems or any FDA Class 3 medical devices or medical devices with a same or similar classification in a foreign jurisdiction or any devices intended for implantation in the human body. Should Buyer purchase or use **onsemi** products for any such unintended or unauthorized application, Buyer shall indemnify and hold **onsemi** and its officers, employees, subsidiaries, affiliates, and distributors harmless against all claims, costs, damages, and expenses, and reasonable attorney fees arising out of, directly or indirectly, any claim of personal injury or death associated with such unintended or unauthorized use, even if such claim alleges that **onsemi** was negligent regarding the design or manufacture of the part. **onsemi** is an Equal Opportunity/Affirmative Action Employer. This literature is subject to all applicable copyright laws and is not for resale in any manner. Other names and brands may be claimed as the property of others.

ON Semiconductor®

FSDM0465RE, FSDM0565RE, FSDM07652RE
Green Mode Power Switch

Features

- Internal Avalanche-Rugged SenseFET
- Advanced Burst-Mode Operation Consumes Under 1W at 240V_{AC} & 0.5W load
- Precision Fixed Operating Frequency (66kHz)
- Internal Start-up Circuit
- Improved Pulse-by-Pulse Current Limiting
- Over-Voltage Protection (OVP)
- Overload Protection (OLP)
- Internal Thermal Shutdown Function (TSD)
- Auto-Restart Mode
- Under-Voltage Lockout (UVLO) with hysteresis
- Low Operating Current (2.5mA)
- Built-in Soft-Start

Applications

- SMPS for LCD monitor and STB
- Adaptor

Description

The FSDM0465RE, FSDM0565RE and FSDM07652RE are an integrated Pulse Width Modulator (PWM) and SenseFET specifically designed for high-performance offline Switch Mode Power Supplies (SMPS) with minimal external components. This device is an integrated high-voltage power-switching regulator that combines an avalanche-rugged SenseFET with a current mode PWM control block. The PWM controller includes an integrated fixed-frequency oscillator, under-voltage lockout, leading-edge blanking (LEB), optimized gate driver, internal soft-start, temperature-compensated precise-current sources for a loop compensation, and self-protection circuitry. Compared with a discrete MOSFET and PWM controller solution, it can reduce total cost; component count, size, and weight; while simultaneously increasing efficiency, productivity, and system reliability. This device is a basic platform well suited for cost-effective designs of flyback converters.

DISCONTINUED
THIS DEVICE IS NOT RECOMMENDED FOR NEW DESIGN
PLEASE CONTACT YOUR onsemi REPRESENTATIVE FOR INFORMATION

Ordering Information

Product Number	Package	Marking Code	BV_{DSS}	$R_{DS(ON)}$ Max.
FSDM0465REWDTU(1)	TO-220F-6L (Forming)	DM0465RE	650V	2.6 Ω
FSDM0565REWDTU	TO-220F-6L (Forming)	DM0565RE	650V	2.2 Ω
FSDM07652REWDTU	TO-220F-6L (Forming)	DM07652RE	650V	1.6 Ω

Note:
1. WDTU: Forming Type.

All packages are lead free per JEDEC: J-STD-020B standard.

© 2006 Semiconductor Components Industries, LLC.
October-2024, Rev. 3

Publication Order Number:
FSDM0465RE/D

Typical Circuit

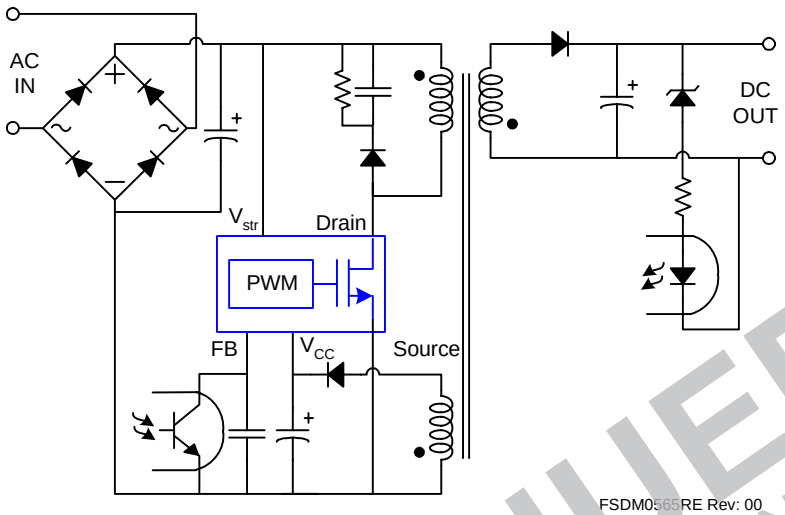

Figure 1. Typical Flyback Application

Output Power Table

Product	230V$_{AC}$ ±15%[4]		85–265V$_{AC}$	
	Adapter[2]	Open Frame[3]	Adapter[2]	Open Frame[3]
FSDM0465RE	48W	56W	40W	48W
FSDM0565RE	60W	70W	50W	60W
FSDM07652RE	70W	80W	60W	70W

Notes:

2. Typical continuous power in a non-ventilated enclosed adapter measured at 50°C ambient.
3. Maximum practical continuous power in an open-frame design at 50°C ambient.
4. 230V$_{AC}$ or 100/115V$_{AC}$ with doubler.

DISCONTINUED
THIS DEVICE IS NOT RECOMMENDED FOR NEW DESIGN
PLEASE CONTACT YOUR onsemi
REPRESENTATIVE FOR INFORMATION

Internal Block Diagram

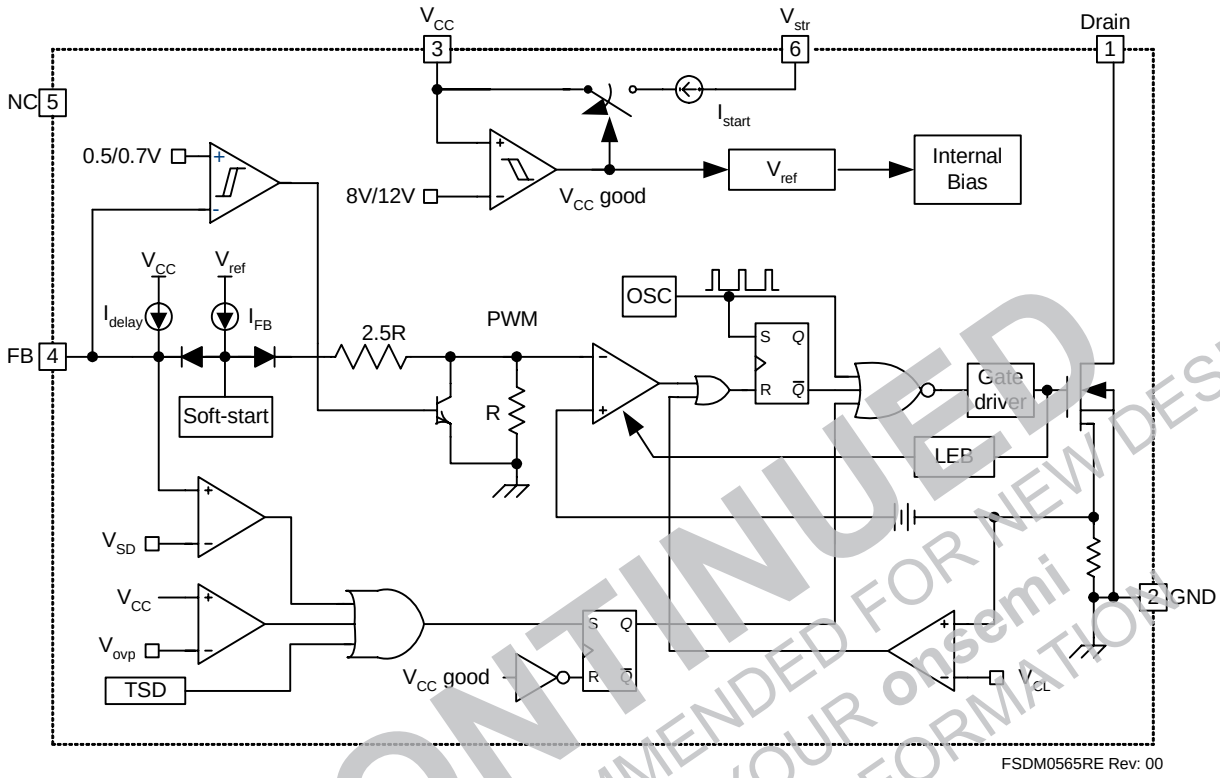

Figure 2. Functional Block Diagram of FSDM0x65RE

DISCONTINUED
THIS DEVICE IS NOT RECOMMENDED FOR NEW DESIGN,
PLEASE CONTACT YOUR onsemi
REPRESENTATIVE FOR INFORMATION

Pin Configuration

TO-220F-6L

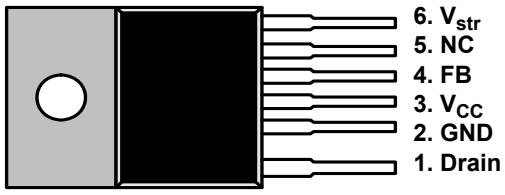

Figure 3. Pin Configuration (Top View)

Pin Definitions

Pin #	Name	Description
1	Drain	**SenseFET drain.** This pin is the high-voltage power SenseFET drain. It is designed to drive the transformer directly.
2	GND	**Ground.** This pin is the control ground and the SenseFET source.
3	V_{CC}	**Power Supply.** This pin is the positive supply voltage input. During start-up, the power is supplied by an internal high-voltage current source connected to the V_{str} pin. When V_{CC} reaches 12V, the internal high-voltage current source is disabled and the power is supplied from the auxiliary transformer winding.
4	FB	**Feedback.** This pin is internally connected to the inverting input of the PWM comparator. The collector of an opto-coupler is typically tied to this pin. For stable operation, a capacitor should be placed between this pin and GND. If the voltage of this pin reaches 6.0V, the overload protection is activated, resulting in shutdown of the Power Switch.
5	NC	No Connection.
6	V_{str}	**Start-up.** This pin is connected directly to the high-voltage DC link. At start-up, the internal high voltage current source supplies internal bias and charges the external capacitor connected to the V_{CC} pin. Once V_{CC} reaches 12V, the internal current source is disabled.

DISCONTINUED
THIS DEVICE IS NOT RECOMMENDED FOR NEW DESIGN
PLEASE CONTACT YOUR onsemi
REPRESENTATIVE FOR INFORMATION

Absolute Maximum Ratings

The “Absolute Maximum Ratings” are those values beyond which the safety of the device cannot be guaranteed. The device should not be operated at these limits. The parametric values defined in the Electrical Characteristics tables are not guaranteed at the absolute maximum ratings. T_A = 25°C, unless otherwise specified.

Symbol	Parameter			Value	Unit
BV_{DSS}	Drain Source Breakdown Voltage			650	V
V_{str}	Max. Voltage at Vstart pin			650	V
I_{DM}	Drain Current Pulsed(5)	FSDM0465RE	T_C=25°C	9.6	A_{DC}
		FSDM0565RE	T_C=25°C	11	
		FSDM07652RE	T_C=25°C	15	
I_D	Continuous Drain Current	FSDM0465RE	T_C=25°C	2.2	A
			T_C=100°C	1.4	
		FSDM0565RE	T_C=25°C	2.8	
			T_C=100°C	1.7	
		FSDM07652RE	T_C=25°C	3.8	
			T_C=100°C	2.4	
E_{AS}	Single Pulsed Avalanche Energy(6)		FSDM0465RE	190	mJ
			FSDM0565RE		
			FSDM07652RE	370	
V_{CC}	Supply Voltage			20	V
V_{FB}	Input Voltage Range			-0.3 to V_{CC}	V
P_D(Watt H/S)	Total Power Dissipation (T_C=25°C)			45	W
T_J	Operating Junction Temperature			Internally limited	°C
T_A	Operating Ambient Temperature			-25 to +85	°C
T_{STG}	Storage Temperature			-55 to +150	°C
	ESD Capability, HBM Model (All pins except V_{str} and FB)			2.0 (GND-V_{str}/V_{FB}=1.5kV)	kV
	ESD Capability, Machine Model (All pins except V_{str} and FB)			300 (GND-V_{str}/V_{FB}=225V)	V

Notes:

5. Repetitive rating: Pulse width limited by maximum junction temperature.
6. L=14mH, starting T_J=25°C.

DISCONTINUED
THIS DEVICE IS NOT RECOMMENDED FOR NEW DESIGN
PLEASE CONTACT YOUR onsemi
REPRESENTATIVE FOR INFORMATION

Thermal Impedance

T_A=25°C, unless otherwise specified.

Symbol	Parameter	Value	Unit
θ_{JA}(7)	Junction-to-Ambient Thermal Resistance	49.90	°C/W
θ_{JC}(8)	Junction-to-Case Thermal Resistance	2.78	°C/W

Notes:

7. Free-standing, with no heat-sink, under natural convection.
8. Infinite cooling condition - refer to the SEMI G30-88.

Electrical Characteristics

T_A = 25°C unless otherwise specified.

Symbol	Parameter		Condition	Min.	Typ.	Max.	Unit
SenseFET SECTION							
I_{DSS}	Zero Gate Voltage Drain Current	FSDM0465RE	V_{DS} = 650V, V_{GS} = 0V			250	µA
			V_{DS} = 520V, V_{GS} = 0V, T_C = 125°C			250	
		FSDM0565RE	V_{DS} = 650V, V_{GS} = 0V			500	
			V_{DS} = 520V, V_{GS} = 0V, T_C = 125°C			500	
		FSDM07652RE	V_{DS} = 650V, V_{GS} = 0V			500	
			V_{DS} = 520V, V_{GS} = 0V, T_C = 125°C			500	
$R_{DS(ON)}$	Static Drain Source on Resistance[9]	FSDM0465RE	V_{GS} = 10V, I_D = 2.5A		2.20	2.60	Ω
		FSDM0565RE			1.76	2.20	
		FSDM07652RE			1.40	1.60	
C_{OSS}	Output Capacitance	FSDM0465RE	V_{GS} = 0V, V_{DS} = 25V, f = 1MHz		60		pF
		FSDM0565RE			78		
		FSDM07652RE			100		
$t_{d(on)}$	Turn-On Delay Time	FSDM0465RE	V_{DD} = 325V, I_D = 5A		23		ns
		FSDM0565RE			22		
		FSDM07652RE			22		
t_r	Rise Time	FSDM0465RE	V_{DD} = 325V, I_D = 5A		20		ns
		FSDM0565RE			52		
		FSDM07652RE			60		
$t_{d(off)}$	Turn-Off Delay Time	FSDM0465RE	V_{DD} = 325V, I_D = 5A		65		ns
		FSDM0565RE			95		
		FSDM07652RE			115		
t_f	Fall Time	FSDM0465RE	V_{DD} = 325V, I_D = 5A		27		ns
		FSDM0565RE			50		
		FSDM07652RE			65		
CONTROL SECTION							
f_{OSC}	Switching Frequency		V_{FB} = 3V	60	66	72	kHz
Δf_{STABLE}	Switching Frequency Stability		13V ≤ V_{CC} ≤ 18V	0	1	3	%
Δf_{OSC}	Switching Frequency Variation[10]		-25°C ≤ T_A ≤ 85°C	0	±5	±10	%
I_{FB}	Feedback Source Current		V_{FB} = GND	0.7	0.9	1.1	mA
D_{MAX}	Maximum Duty Cycle	FSDM0465RE		77	82	87	%
		FSDM0565RE		77	82	87	%
		FSDM07652RE		75	80	85	%
D_{MIN}	Minimum Duty Cycle					0	%
V_{START}	UVLO Threshold Voltage		V_{FB} = GND	11	12	13	V
V_{STOP}			V_{FB} = GND	7	8	9	V
$t_{S/S}$	Internal Soft-Start Time		V_{FB} = 3		10	15	ms

DISCONTINUED
THIS DEVICE IS NOT RECOMMENDED FOR NEW DESIGN
PLEASE CONTACT YOUR onsemi
REPRESENTATIVE FOR INFORMATION

Electrical Characteristics (Continued)

T_A = 25°C unless otherwise specified.

Symbol	Parameter		Condition	Min.	Typ.	Max.	Unit
BURST MODE SECTION							
V_{BURH}	Burst Mode Voltages		V_{CC} = 14V		0.7		V
V_{BURL}			V_{CC} = 14V		0.5		V
PROTECTION SECTION							
V_{SD}	Shutdown Feedback Voltage		$V_{FB} \geq 5.5V$	5.5	6.0	6.5	V
I_{DELAY}	Shutdown Delay Current		V_{FB} = 5V	2.8	3.5	4.2	µA
t_{LEB}	Leading-Edge Blanking Time				250		ns
I_{LIMIT}	Peak Current Limit[11]	FSDM0465RE	V_{FB} = 5V, V_{CC} = 14V	1.60	1.80	2.00	A
		FSDM0565RE	V_{FB} = 5V, V_{CC} = 14V	2.00	2.25	2.50	
		FSDM07652RE	V_{FB} = 5V, V_{CC} = 14V	2.20	2.50	2.70	
V_{OVP}	Over-Voltage Protection			18	19	20	V
T_{SD}	Thermal Shutdown Temperature[10]			130	145	160	°C
TOTAL DEVICE SECTION							
I_{OP}	Operating Supply Current[12]		V_{FB} = GND, V_{CC} = 14V		2.5	5.0	mA
$I_{OP(MIN)}$			V_{FB} = GND, V_{CC} = 10V				
$I_{OP(MAX)}$			V_{FB} = GND, V_{CC} = 18V				

Notes:

9. Pulse test: Pulse width ≤ 300µS, duty cycle ≤ 2%.
10. These parameters, although guaranteed at the design, are not tested in production.
11. These parameters indicate the inductor current.
12. This parameter is the current flowing into the control IC.

DISCONTINUED
THIS DEVICE IS NOT RECOMMENDED FOR NEW DESIGN
PLEASE CONTACT YOUR onsemi
REPRESENTATIVE FOR INFORMATION

Comparison Between FS6M0765RTC and FSDM0x65RE

Function	FS6M0765RTC	FSDM0x65RE	FSDM0x65RE Advantages
Soft-Start	Adjustable soft-start time using an external capacitor	Internal soft-start with typically 10ms (fixed)	■ Gradually increasing current limit during soft-start reduces peak current and voltage component stresses ■ Eliminates external soft-start components in most applications ■ Reduces or eliminates output overshoot
Burst-Mode Operation	■ Built into controller ■ Output voltage drops to around half	■ Built into controller ■ Output voltage fixed	■ Improves light-load efficiency ■ Reduces no-load consumption

DISCONTINUED
THIS DEVICE IS NOT RECOMMENDED FOR NEW DESIGN
PLEASE CONTACT YOUR onsemi
REPRESENTATIVE FOR INFORMATION

Typical Performance Characteristics

These characteristic graphs are normalized at T_A= 25°C.

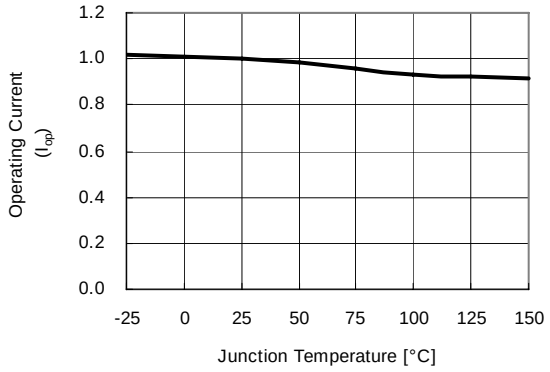

Figure 4. Operating Current vs. Temp.

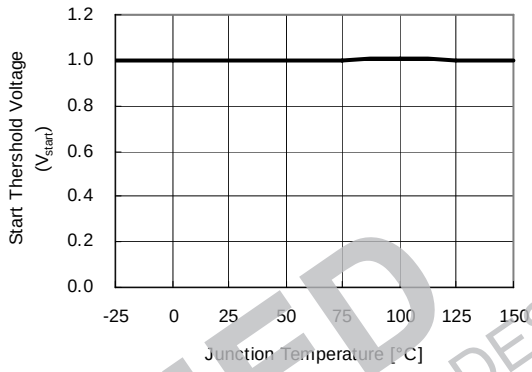

Figure 5. Start Threshold Voltage vs. Temp.

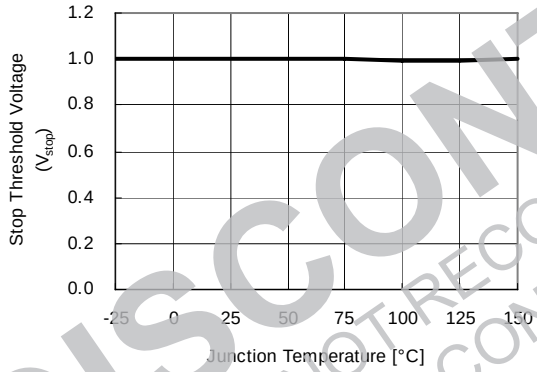

Figure 6. Stop Threshold Voltage vs. Temp.

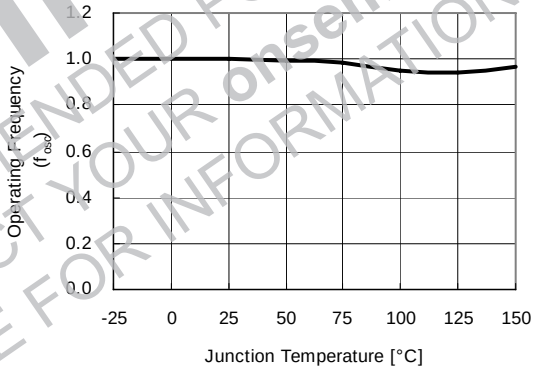

Figure 7. Operating Frequency vs. Temp.

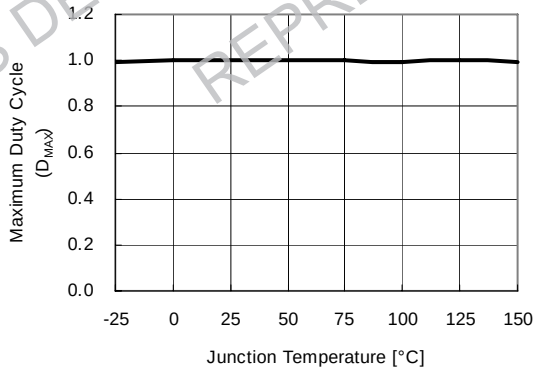

Figure 8. Maximum Duty Cycle vs. Temp.

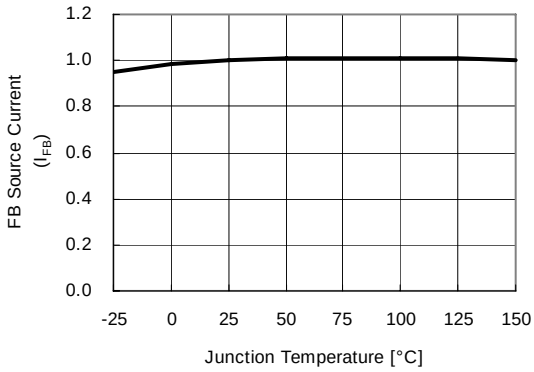

Figure 9. Feedback Source Current vs. Temp.

DISCONTINUED
THIS DEVICE IS NOT RECOMMENDED FOR NEW DESIGN
PLEASE CONTACT YOUR onsemi
REPRESENTATIVE FOR INFORMATION

Typical Performance Characteristics (Continued)

These characteristic graphs are normalized at T_A= 25°C.

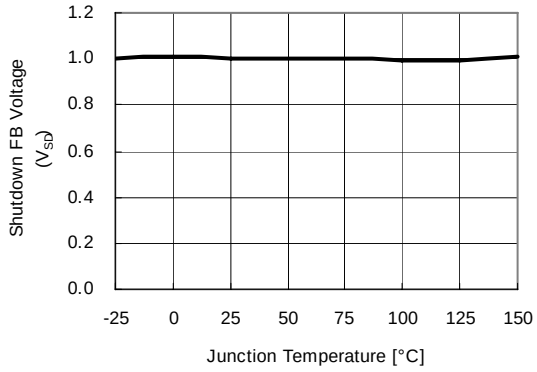

Figure 10. Shutdown Feedback Voltage vs. Temp.

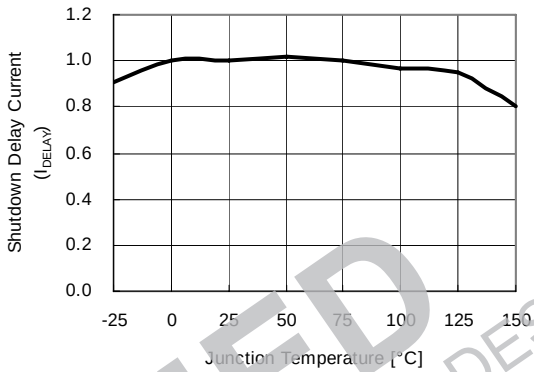

Figure 11. Shutdown Delay Current vs. Temp.

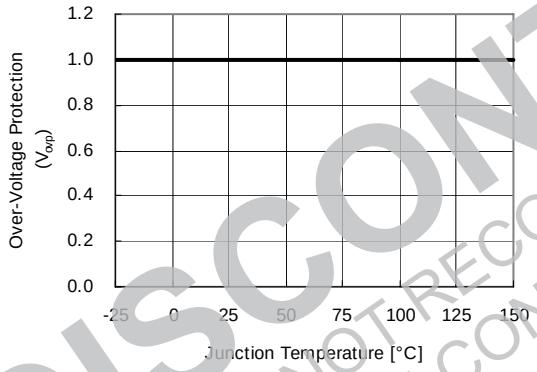

Figure 12. Over-Voltage Protection vs. Temp.

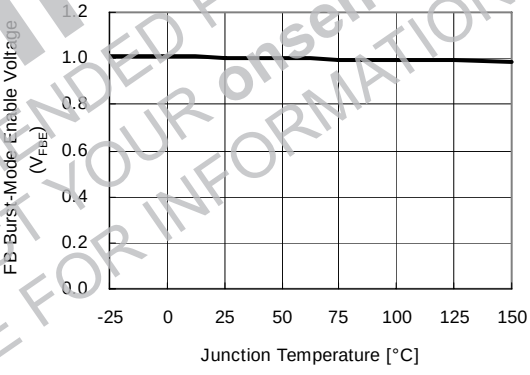

Figure 13. Burst-Mode Enable Voltage vs. Temp.

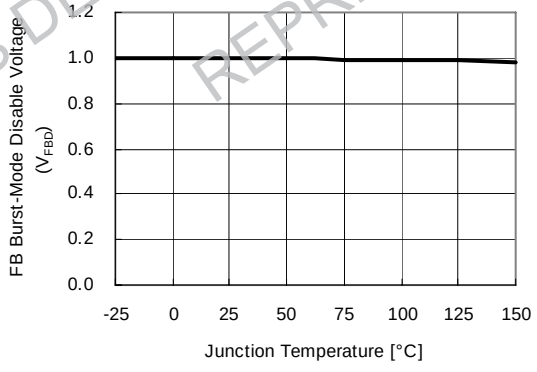

Figure 14. Burst-Mode Disable Voltage vs. Temp.

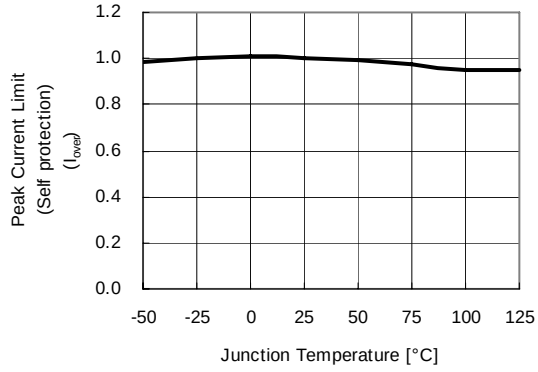

Figure 15. Current Limit vs. Temp.

DISCONTINUED
THIS DEVICE IS NOT RECOMMENDED FOR NEW DESIGN
PLEASE CONTACT YOUR onsemi
REPRESENTATIVE FOR INFORMATION

Typical Performance Characteristics (Continued)

These characteristic graphs are normalized at T_A= 25°C.

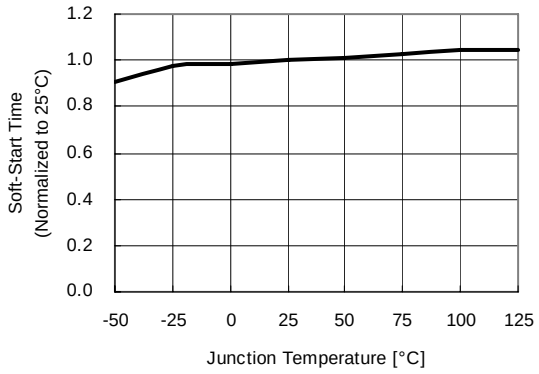

Figure 16. Soft-Start Time vs. Temp.

DISCONTINUED
THIS DEVICE IS NOT RECOMMENDED FOR NEW DESIGN
PLEASE CONTACT YOUR onsemi
REPRESENTATIVE FOR INFORMATION

Functional Description

1. Start-up: In previous generations of Power Switches the V_{CC} pin had an external start-up resistor to the DC input voltage line. In this generation, the start-up resistor is replaced by an internal high-voltage current source. At start-up, the internal high-voltage current source supplies the internal bias and charges the external capacitor (C_{vcc}) connected to the V_{CC} pin, as illustrated in Figure 17. When V_{CC} reaches 12V, the FSDM0x65RE begins switching and the internal high-voltage current source is disabled. The FSDM0x65RE continues normal switching operation and the power is supplied from the auxiliary transformer winding unless V_{CC} goes below the stop voltage of 8V.

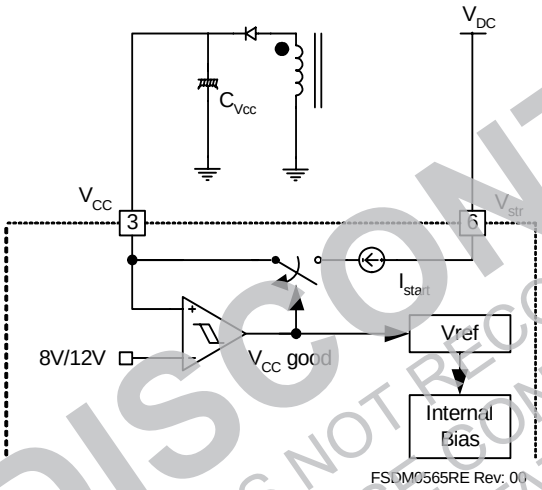

Figure 17. Internal Start-up Circuit

2. Feedback Control: FSDM0x65RE employs current-mode control, as shown in Figure 18. An opto-coupler (such as the H11A817A) and shunt regulator (such as the KA431) are typically used to implement the feedback network. Comparing the feedback voltage with the voltage across the R_{sense} resistor, plus an offset voltage, makes it possible to control the switching duty cycle. When the reference pin voltage of the shunt regulator exceeds the internal reference voltage of 2.5V, the opto-coupler LED current increases, pulling down the feedback voltage and reducing the duty cycle. This event typically occurs when the input voltage is increased or the output load is decreased.

2.1 Pulse-by-Pulse Current Limit: Because current-mode control is employed, the peak current through the SenseFET is limited by the inverting input of PWM comparator (V_{FB}*) as shown in Figure 18. Assuming that the 0.9mA current source flows only through the internal resistor (2.5R + R = 2.8kΩ), the cathode voltage of diode D2 is about 2.5V. Since D1 is blocked when the feedback voltage (V_{FB}) exceeds 2.5V, the maximum voltage of the cathode of D2 is clamped at this voltage, thus clamping V_{FB}*. Therefore, the peak value of the current through the SenseFET is limited.

2.2 Leading Edge Blanking (LEB): At the instant the internal SenseFET is turned on, a high-current spike occurs through the SenseFET, caused by primary-side capacitance and secondary-side rectifier reverse recovery. Excessive voltage across the R_{sense} resistor would lead to incorrect feedback operation in the current mode PWM control. To counter this effect, the FSDM0x65RE employs a leading-edge blanking (LEB) circuit. This circuit inhibits the PWM comparator for a short time (t_{LEB}) after the SenseFET is turned on.

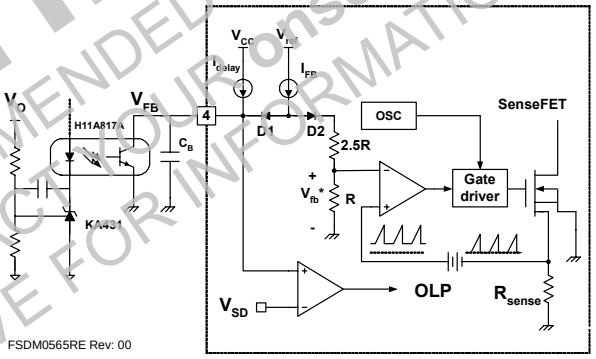

Figure 18. Pulse-Width-Modulation (PWM) Circuit

3. Protection Circuit: The FSDM0x65RE has several self-protective functions, such as overload protection (OLP), over-voltage protection (OVP), and thermal shutdown (TSD). Because these protection circuits are fully integrated into the IC without external components, the reliability is improved without increasing cost. Once a fault condition occurs, switching is terminated and the SenseFET remains off, which causes V_{CC} to fall. When V_{CC} reaches the UVLO stop voltage of 8V, the protection is reset and the internal high-voltage current source charges the V_{CC} capacitor via the V_{str} pin. When V_{CC} reaches the UVLO start voltage of 12V, the FSDM0x65RE resumes normal operation. In this manner, the auto-restart can alternately enable and disable the switching of the power SenseFET until the fault condition is eliminated (see Figure 19).

DISCONTINUED
THIS DEVICE IS NOT RECOMMENDED FOR NEW DESIGN
PLEASE CONTACT YOUR onsemi
REPRESENTATIVE FOR INFORMATION

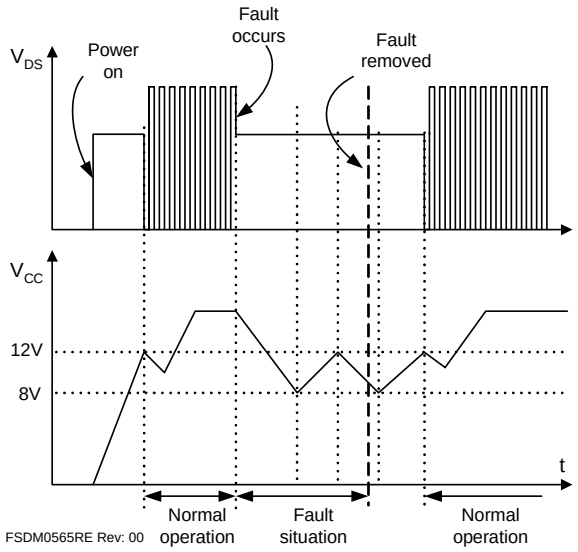

Figure 19. Auto Restart Operation

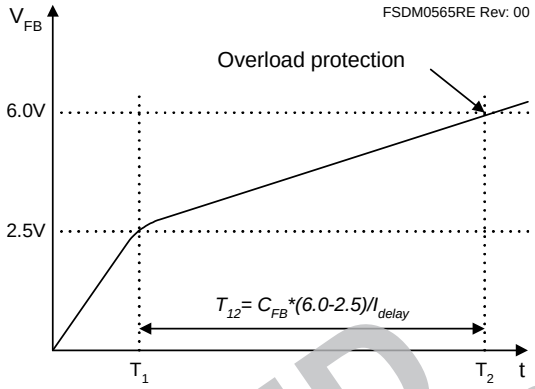

Figure 20. Overload Protection

3.1 Overload Protection (OLP): Overload is defined as the load current exceeding a pre-set level due to an unexpected event. In this situation, the protection circuit should be activated to protect the SMPS. Even when the SMPS is in normal operation, the overload protection circuit can be activated during the load transition. To avoid this undesired operation, the overload protection circuit is designed to be activated after a specified time to determine whether it is a transient situation or a true overload situation. Because of the pulse-by-pulse current limit capability, the maximum peak current through the SenseFET is limited, and therefore the maximum input power is restricted with a given input voltage. If the output consumes beyond this maximum power, the output voltage (V_O) decreases below the set voltage. This reduces the current through the opto-coupler LED, which also reduces the opto-coupler transistor current, thus increasing the feedback voltage (V_{FB}). If V_{FB} exceeds 2.5V, D1 is blocked and the 3.5μA current source starts to charge C_B slowly up to V_{CC}. In this condition, V_{FB} continues increasing until it reaches 6V, when the switching operation is terminated, as shown in Figure 20. The delay time for shutdown is the time required to charge C_B from 2.5V to 6.0V with 3.5μA. A 10 ~ 50ms delay time is typical for most applications.

3.2 Over-Voltage Protection (OVP): If the secondary side feedback circuit were to malfunction or a solder defect caused an opening in the feedback path, the current through the opto-coupler transistor becomes almost zero. In this event, V_{FB} climbs in a similar manner to the overload situation, forcing the preset maximum current to be supplied to the SMPS until the overload protection is activated. Because more energy than required is provided to the output, the output voltage may exceed the rated voltage before the overload protection is activated, resulting in the breakdown of the devices in the secondary side. To prevent this situation, an over-voltage protection (OVP) circuit is employed. In general, V_{CC} is proportional to the output voltage and the FSDM0x65RE uses V_{CC} instead of directly monitoring the output voltage. If V_{CC} exceeds 19V, an OVP circuit is activated, resulting in the termination of the switching operation. To avoid undesired activation of OVP during normal operation, V_{CC} should be designed below 19V.

3.3 Thermal Shutdown (TSD): The SenseFET and the control IC are built in one package. This makes it easy for the control IC to detect the heat generation from the SenseFET. When the temperature exceeds ~150°C, the thermal shutdown is activated.

4. Soft-Start: The FSDM0x65RE has an internal soft-start circuit that increases PWM comparator inverting input voltage, together with the SenseFET current, slowly after it starts up. The typical soft-start time is 10ms. The pulse width to the power switching device is progressively increased to establish the correct working conditions for transformers, inductors, and capacitors. The voltage on the output capacitors is progressively increased with the intention of smoothly establishing the required output voltage. It also helps prevent transformer saturation and reduces the stress on the secondary diode during start-up.

DISCONTINUED
THIS DEVICE IS NOT RECOMMENDED FOR NEW DESIGN
PLEASE CONTACT YOUR onsemi
REPRESENTATIVE FOR INFORMATION

5. Burst Operation: To minimize power dissipation in standby mode, the FSDM0x65RE enters burst-mode operation. As the load decreases, the feedback voltage decreases. As shown in Figure 21, the device automatically enters burst mode when the feedback voltage drops below V_{BURL}(500mV). At this point, switching stops and the output voltages start to drop at a rate dependent on standby current load. This causes the feedback voltage to rise. Once it passes V_{BURH} (700mV), switching resumes. The feedback voltage then falls and the process repeats. Burst-mode operation alternately enables and disables switching of the power SenseFET, thereby reducing switching loss in standby mode.

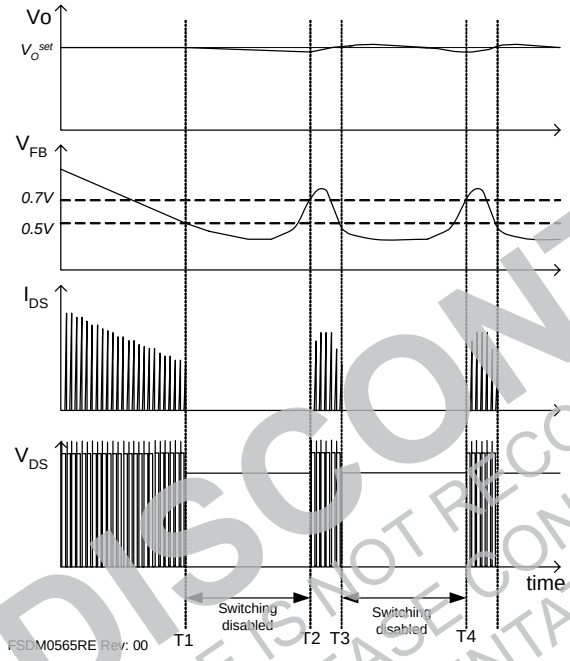

Figure 21. Waveforms of Burst Operation

DISCONTINUED
THIS DEVICE IS NOT RECOMMENDED FOR NEW DESIGN
PLEASE CONTACT YOUR onsemi
REPRESENTATIVE FOR INFORMATION

Application Information

Application	Output Power	Input Voltage	Output Voltage (Max. Current)
LCD Monitor	40W	Universal input (85-265V_{AC})	5V (2.0A) 12V (2.5A)

Features

- High efficiency (>81% at 85V_{AC} input)
- Low zero load power consumption (<300mW at 240V_{AC} input)
- Low standby mode power consumption (<800mW at 240V_{AC} input and 0.3W load)
- Low component count
- Enhanced system reliability through various protection functions
- Internal soft-start (10ms)

Key Design Notes

- Resistors R102 and R105 are employed to prevent start-up at low input voltage. After start-up, there is no power loss in these resistors since the start-up pin is internally disconnected after start-up.
- The delay time for overload protection is designed to be about 50ms with C106 of 47nF. If a faster triggering of OLP is required, C106 can be reduced to 10nF.
- Zener diode ZD102 is used for a safety test, such as UL. When the drain pin and feedback pin are shorted, the zener diode fails and remains short, which causes the fuse (F1) to be blown and prevents explosion of the opto-coupler (IC301). This zener diode also increases the immunity against line surge.

1. Schematic

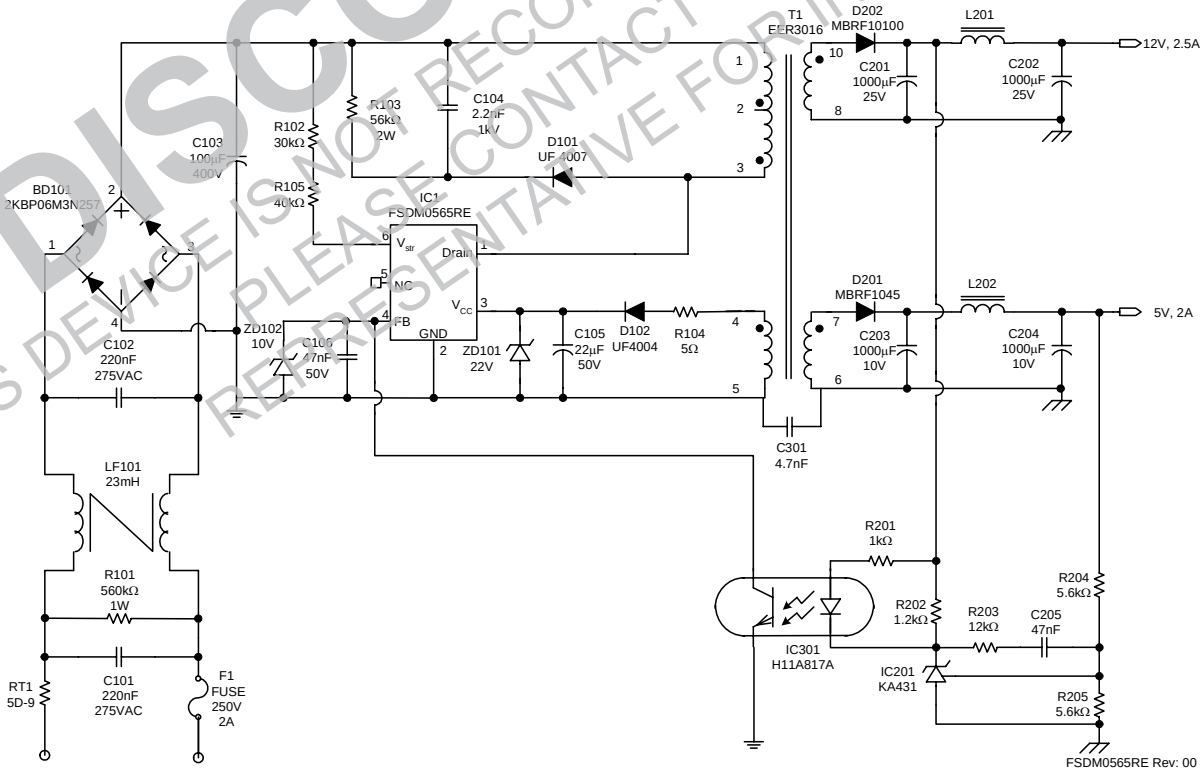

Figure 22. Demo Circuit

DISCONTINUED
THIS DEVICE IS NOT RECOMMENDED FOR NEW DESIGN
PLEASE CONTACT YOUR onsemi
REPRESENTATIVE FOR INFORMATION

2. Transformer

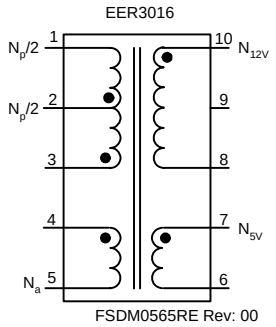

Figure 23. Transformer Schematic Diagram

3. Winding Specification

No	Pin (s→f)	Wire	Turns	Winding Method
N_a	4 → 5	0.2φ × 1	8	Center Winding
Insulation: Polyester Tape t = 0.050mm, 2 Layers				
$N_p/2$	2 → 1	0.4φ × 1	18	Solenoid Winding
Insulation: Polyester Tape t = 0.050mm, 2 Layers				
N_{12V}	10 → 8	0.3φ × 3	7	Center Winding
Insulation: Polyester Tape t = 0.050mm, 2 Layers				
N_{5V}	7 → 6	0.3φ × 3	3	Center Winding
Insulation: Polyester Tape t = 0.050mm, 2 Layers				
$N_p/2$	3 → 2	0.4φ × 1	18	Solenoid Winding
Outer Insulation: Polyester Tape t = 0.050mm, 2 Layers				

4. Electrical Characteristics

	Pin	Specification	Remarks
Inductance	1 - 3	520μH ± 10%	100kHz, 1V
Leakage Inductance	1 - 3	10μH Max	2nd all short

5. Core & Bobbin

- Core: EER 3016
- Bobbin: EER3016
- Ae(mm2): 96

DISCONTINUED
THIS DEVICE IS NOT RECOMMENDED FOR NEW DESIGN
PLEASE CONTACT YOUR onsemi
REPRESENTATIVE FOR INFORMATION

6. Demo Circuit Part List

Part	Value	Note
Fuse		
F101	2A/250V	
NTC		
RT101	5D-9	
Resistor		
R101	560kΩ	1W
R102	30kΩ	1/4W
R103	56kΩ	2W
R104	5Ω	1/4W
R105	40kΩ	1/4W
R201	1kΩ	1/4W
R202	1.2kΩ	1/4W
R203	12kΩ	1/4W
R204	5.6kΩ	1/4W
R205	5.6kΩ	1/4W
Capacitor		
C101	220nF/275V$_{AC}$	Box Capacitor
C102	220nF/275V$_{AC}$	Box Capacitor
C103	100μF/400V	Electrolytic Capacitor
C104	2.2nF/1kV	Ceramic Capacitor
C105	22μF/50V	Electrolytic Capacitor
C106	47nF/50V	Ceramic Capacitor
C201	1000μF/25V	Electrolytic Capacitor
C202	1000μF/25V	Electrolytic Capacitor
C203	1000μF/10V	Electrolytic Capacitor
C204	1000μF/10V	Electrolytic Capacitor
C205	47nF/50V	Ceramic Capacitor
C301	4.7nF	Polyester Film Cap.
Inductor		
L201	5μH	Wire 1.2mm
L202	5μH	Wire 1.2mm
Diode		
D101	UF4007	

Part	Value	Note
D102	UF4004	
D201	MBRF1045	
D202	MBRF10100	
ZD101	Zener Diode	22V
ZD102	Zener Diode	10V
Bridge Diode		
BD101	2KBP06M 3N257	Bridge Diode
Line Filter		
LF101	23mH	Wire 0.4mm
IC		
IC101	FSDM0565RE	Power Switch (5A,650V)
IC201	KA431 (TL431)	Voltage reference
IC301	H11A817A	Opto-coupler

DISCONTINUED
THIS DEVICE IS NOT RECOMMENDED FOR NEW DESIGN,
PLEASE CONTACT YOUR onsemi
REPRESENTATIVE FOR INFORMATION

7. Layout

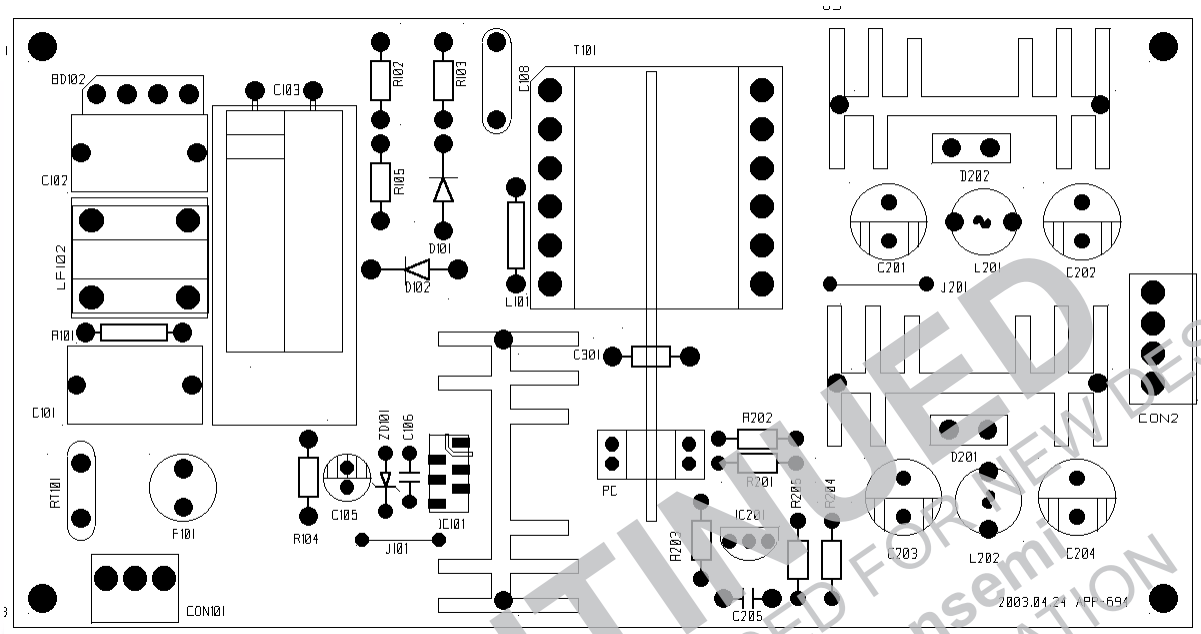

Figure 24. Layout Considerations for FSDM0565RE (Top View)

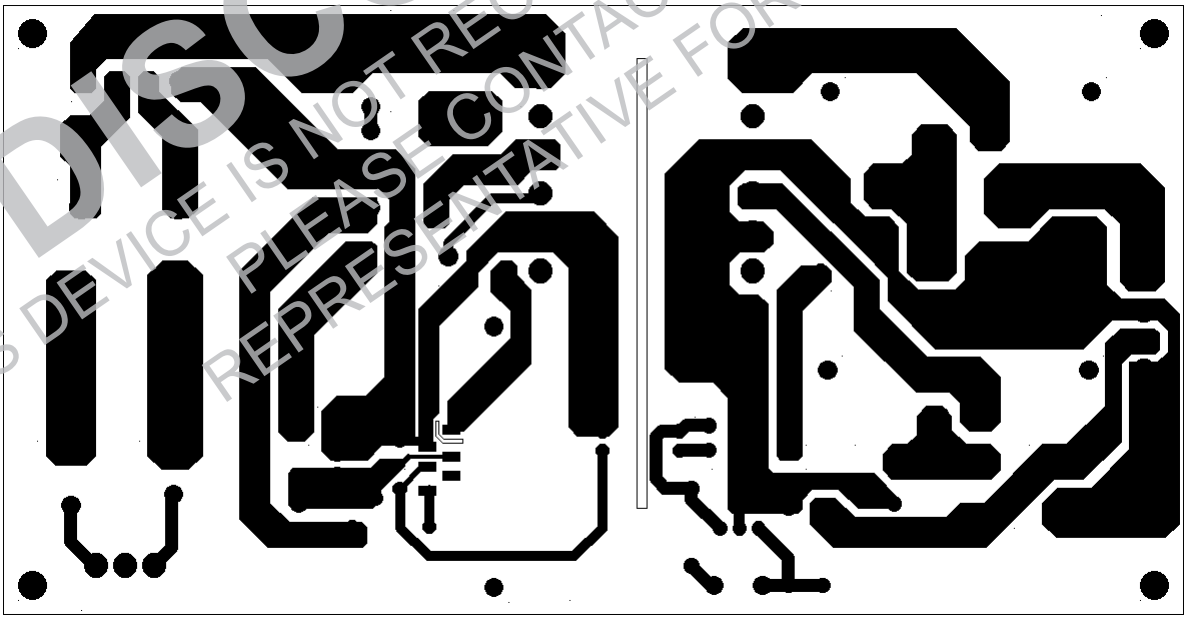

Figure 25. Layout Considerations for FSDM0565RE (Bottom View)

DISCONTINUED
THIS DEVICE IS NOT RECOMMENDED FOR NEW DESIGN
PLEASE CONTACT YOUR onsemi
REPRESENTATIVE FOR INFORMATION

Package Dimensions

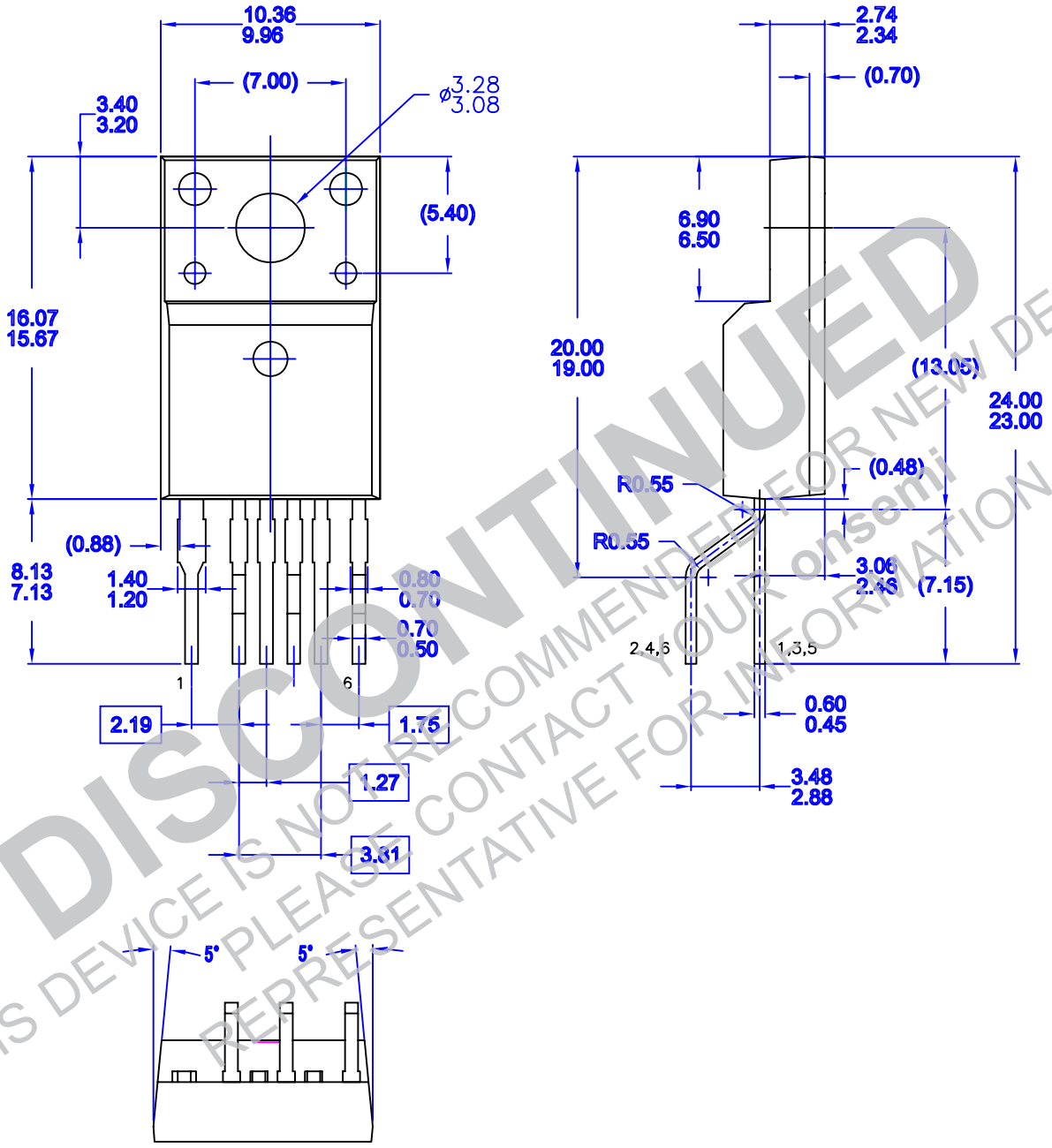

NOTES: UNLESS OTHERWISE SPECIFIED
A) THIS PACKAGE DOES NOT COMPLY TO ANY CURRENT PACKAGING STANDARD.
B) ALL DIMENSIONS ARE IN MILLIMETERS.
C) DIMENSIONS ARE EXCLUSIVE OF BURRS, MOLD FLASH, AND TIE BAR EXTRUSIONS.
D) LEADFORM OPTION A

DISCONTINUED
THIS DEVICE IS NOT RECOMMENDED FOR NEW DESIGN
PLEASE CONTACT YOUR onsemi
REPRESENTATIVE FOR INFORMATION

Figure 26. TO-220F-6L (Forming)

DISCONTINUED
THIS DEVICE IS NOT RECOMMENDED FOR NEW DESIGN
PLEASE CONTACT YOUR onsemi
REPRESENTATIVE FOR INFORMATION

ON Semiconductor and ON are trademarks of Semiconductor Components Industries, LLC dba ON Semiconductor or its subsidiaries in the United States and/or other countries. ON Semiconductor owns the rights to a number of patents, trademarks, copyrights, trade secrets, and other intellectual property. A listing of ON Semiconductor's product/patent coverage may be accessed at www.onsemi.com/site/pdf/Patent−Marking.pdf. ON Semiconductor reserves the right to make changes without further notice to any products herein. ON Semiconductor makes no warranty, representation or guarantee regarding the suitability of its products for any particular purpose, nor does ON Semiconductor assume any liability arising out of the application or use of any product or circuit, and specifically disclaims any and all liability, including without limitation special, consequential or incidental damages. Buyer is responsible for its products and applications using ON Semiconductor products, including compliance with all laws, regulations and safety requirements or standards, regardless of any support or applications information provided by ON Semiconductor. "Typical" parameters which may be provided in ON Semiconductor data sheets and/or specifications can and do vary in different applications and actual performance may vary over time. All operating parameters, including "Typicals" must be validated for each customer application by customer's technical experts. ON Semiconductor does not convey any license under its patent rights nor the rights of others. ON Semiconductor products are not designed, intended, or authorized for use as a critical component in life support systems or any FDA Class 3 medical devices or medical devices with a same or similar classification in a foreign jurisdiction or any devices intended for implantation in the human body. Should Buyer purchase or use ON Semiconductor products for any such unintended or unauthorized application, Buyer shall indemnify and hold ON Semiconductor and its officers, employees, subsidiaries, affiliates, and distributors harmless against all claims, costs, damages, and expenses, and reasonable attorney fees arising out of, directly or indirectly, any claim of personal injury or death associated with such unintended or unauthorized use, even if such claim alleges that ON Semiconductor was negligent regarding the design or manufacture of the part. ON Semiconductor is an Equal Opportunity/Affirmative Action Employer. This literature is subject to all applicable copyright laws and is not for resale in any manner.

PUBLICATION ORDERING INFORMATION

LITERATURE FULFILLMENT:
Literature Distribution Center for ON Semiconductor
19521 E. 32nd Pkwy, Aurora, Colorado 80011 USA
Phone: 303−675−2175 or 800−344−3860 Toll Free USA/Canada
Fax: 303−675−2176 or 800−344−3867 Toll Free USA/Canada
Email: orderlit@onsemi.com

N. American Technical Support: 800−282−9855 Toll Free USA/Canada
Europe, Middle East and Africa Technical Support:
Phone: 421 33 790 2910
Japan Customer Focus Center
Phone: 81−3−5817−1050

ON Semiconductor Website: **www.onsemi.com**

Order Literature: http://www.onsemi.com/orderlit

For additional information, please contact your local Sales Representative

ENTEGRECİ

Bu belge www.entegreci.com üzerinden sunulmaktadır.

Elektronik komponent tedarikinde Entegreci

Entegreci, Eskişehir merkezli, Türkiye geneline satış yapan bir elektronik komponent mağazasıdır. Entegreler (IC), mikrodenetleyiciler, transistörler, diyotlar, pasif elemanlar, konnektörler, modüller ve geliştirme kartları tek adetten seri üretim adetlerine kadar satılır. Ürün sayfalarında güncel stok durumunu, fiyatı ve datasheet bağlantısını bulabilirsiniz.

Parça koduyla arama

Üretici parça numarasını yazın; stok ve fiyatı hemen görün.

www.entegreci.com

Ürün kategorileri

Entegreden kapasitöre tüm elektronik komponent kategorileri.

Kategorilere göz atın

Üreticiler

Aradığınız üreticinin ürünlerini tek sayfada inceleyin.

Üreticileri görün

Toplu alım ve teklif

Listede olmayan ya da yüksek adetli parçalar için teklif isteyin.

Teklif isteyin

www.entegreci.com | **destek@entegreci.com** | **0850 305 90 34**

Entegreci is an online electronic components store based in Türkiye. Search by manufacturer part number to see stock, prices and datasheets for integrated circuits, microcontrollers, transistors, passive components and connectors, or request a quote for parts that are not listed.

Bu sayfa Entegreci tarafından eklenmiştir. Belgenin önceki sayfaları asıl yayıncısına aittir ve içeriği değiştirilmemiştir; en güncel sürüm için belgenin yayıncısına başvurun.