

Is Now Part of



ON Semiconductor®

To learn more about ON Semiconductor, please visit our website at
www.onsemi.com

Please note: As part of the Fairchild Semiconductor integration, some of the Fairchild orderable part numbers will need to change in order to meet ON Semiconductor's system requirements. Since the ON Semiconductor product management systems do not have the ability to manage part nomenclature that utilizes an underscore (_), the underscore (_) in the Fairchild part numbers will be changed to a dash (-). This document may contain device numbers with an underscore (_). Please check the ON Semiconductor website to verify the updated device numbers. The most current and up-to-date ordering information can be found at www.onsemi.com. Please email any questions regarding the system integration to Fairchild_questions@onsemi.com.

ON Semiconductor and the ON Semiconductor logo are trademarks of Semiconductor Components Industries, LLC dba ON Semiconductor or its subsidiaries in the United States and/or other countries. ON Semiconductor owns the rights to a number of patents, trademarks, copyrights, trade secrets, and other intellectual property. A listing of ON Semiconductor's product/patent coverage may be accessed at www.onsemi.com/site/pdf/Patent-Marking.pdf. ON Semiconductor reserves the right to make changes without further notice to any products herein. ON Semiconductor makes no warranty, representation or guarantee regarding the suitability of its products for any particular purpose, nor does ON Semiconductor assume any liability arising out of the application or use of any product or circuit, and specifically disclaims any and all liability, including without limitation special, consequential or incidental damages. Buyer is responsible for its products and applications using ON Semiconductor products, including compliance with all laws, regulations and safety requirements or standards, regardless of any support or applications information provided by ON Semiconductor. "Typical" parameters which may be provided in ON Semiconductor data sheets and/or specifications can and do vary in different applications and actual performance may vary over time. All operating parameters, including "Typicals" must be validated for each customer application by customer's technical experts. ON Semiconductor does not convey any license under its patent rights nor the rights of others. ON Semiconductor products are not designed, intended, or authorized for use as a critical component in life support systems or any FDA Class 3 medical devices or medical devices with a same or similar classification in a foreign jurisdiction or any devices intended for implantation in the human body. Should Buyer purchase or use ON Semiconductor products for any such unintended or unauthorized application, Buyer shall indemnify and hold ON Semiconductor and its officers, employees, subsidiaries, affiliates, and distributors harmless against all claims, costs, damages, and expenses, and reasonable attorney fees arising out of, directly or indirectly, any claim of personal injury or death associated with such unintended or unauthorized use, even if such claim alleges that ON Semiconductor was negligent regarding the design or manufacture of the part. ON Semiconductor is an Equal Opportunity/Affirmative Action Employer. This literature is subject to all applicable copyright laws and is not for resale in any manner.

FAIRCHILD SEMICONDUCTOR®

October 2013

FQB22P10

P-Channel QFET® MOSFET

-100 V, -22 A, 125 mΩ

Description

This P-Channel enhancement mode power MOSFET is produced using Fairchild Semiconductor's proprietary planar stripe and DMOS technology. This advanced MOSFET technology has been especially tailored to reduce on-state resistance, and to provide superior switching performance and high avalanche energy strength. These devices are suitable for switched mode power supplies, audio amplifier, DC motor control, and variable switching power applications.

Features

- -22 A, -100 V, $R_{DS(on)}$ = 125 mΩ (Max) @V_{GS} = -10 V, I_D = -11 A
- Low Gate Charge (Typ. 40 nC)
- Low Crss (Typ. 160 pF)
- 100% Avalanche Tested
- 175°C Maximum Junction Temperature Rating

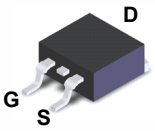

D^2-PAK

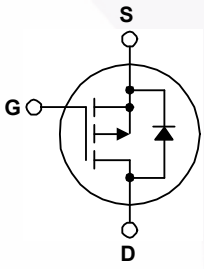

Absolute Maximum Ratings

T_C = 25°C unless otherwise noted

Symbol	Parameter		FQB22P10TM	Unit
V_{DSS}	Drain-Source Voltage		-100	V
I_D	Drain Current - Continuous (T_C = 25°C)		-22	A
	- Continuous (T_C = 100°C)		-15.6	A
I_{DM}	Drain Current - Pulsed	(Note 1)	-88	A
V_{GSS}	Gate-Source Voltage		±30	V
E_{AS}	Single Pulsed Avalanche Energy	(Note 2)	710	mJ
I_{AR}	Avalanche Current	(Note 1)	-22	A
E_{AR}	Repetitive Avalanche Energy	(Note 1)	12.5	mJ
dv/dt	Peak Diode Recovery dv/dt	(Note 3)	-6.0	V/ns
P_D	Power Dissipation (T_A = 25°C) *		3.75	W
	Power Dissipation (T_C = 25°C)		125	W
	- Derate above 25°C		0.83	W/°C
T_J, T_{STG}	Operating and Storage Temperature Range		-55 to +175	°C
T_L	Maximum lead temperature for soldering purposes, 1/8" from case for 5 seconds		300	°C

Thermal Characteristics

Symbol	Parameter	FQB22P10TM	Unit
$R_{\theta JC}$	Thermal Resistance, Junction to Case, Max.	1.2	°C/W
$R_{\theta JA}$	Thermal Resistance, Junction to Ambient (minimum pad of 2 oz copper), Max.	62.5	
	Thermal Resistance, Junction to Ambient (* 1 in^2 pad of 2 oz copper), Max.	40	

©2000 Fairchild Semiconductor Corporation

Package Marking and Ordering Information

Device Marking	Device	Package	Reel Size	Tape Width	Quantity
FQB22P10	FQB22P10TM	D2-PAK	330mm	24mm	800

Electrical Characteristics

T_C = 25°C unless otherwise noted

Symbol	Parameter	Test Conditions	Min	Typ	Max	Unit
Off Characteristics						
BV_{DSS}	Drain-Source Breakdown Voltage	V_{GS} = 0 V, I_D = -250 µA	-100	--	--	V
ΔBV_{DSS} / ΔT_J	Breakdown Voltage Temperature Coefficient	I_D = -250 µA, Referenced to 25°C	--	-0.1	--	V/°C
I_{DSS}	Zero Gate Voltage Drain Current	V_{DS} = -100 V, V_{GS} = 0 V	--	--	-1	µA
		V_{DS} = -80 V, T_C = 125°C	--	--	-10	µA
I_{GSSF}	Gate-Body Leakage Current, Forward	V_{GS} = -30 V, V_{DS} = 0 V	--	--	-100	nA
I_{GSSR}	Gate-Body Leakage Current, Reverse	V_{GS} = 30 V, V_{DS} = 0 V	--	--	100	nA
On Characteristics						
$V_{GS(th)}$	Gate Threshold Voltage	V_{DS} = V_{GS}, I_D = -250 µA	-2.0	--	-4.0	V
$R_{DS(on)}$	Static Drain-Source On-Resistance	V_{GS} = -10 V, I_D = -11 A	--	0.096	0.125	Ω
g_{FS}	Forward Transconductance	V_{DS} = -40 V, I_D = -11 A	--	13.5	--	S
Dynamic Characteristics						
C_{iss}	Input Capacitance	V_{DS} = -25 V, V_{GS} = 0 V, f = 1.0 MHz	--	1170	1500	pF
C_{oss}	Output Capacitance		--	460	600	pF
C_{rss}	Reverse Transfer Capacitance		--	160	200	pF
Switching Characteristics						
$t_{d(on)}$	Turn-On Delay Time	V_{DD} = -50 V, I_D = -22 A, R_G = 25 Ω (Note 4)	--	17	45	ns
t_r	Turn-On Rise Time		--	170	350	ns
$t_{d(off)}$	Turn-Off Delay Time		--	60	130	ns
t_f	Turn-Off Fall Time		--	110	230	ns
Q_g	Total Gate Charge	V_{DS} = -80 V, I_D = -22 A, V_{GS} = -10 V (Note 4)	--	40	50	nC
Q_{gs}	Gate-Source Charge		--	7.0	--	nC
Q_{gd}	Gate-Drain Charge		--	21	--	nC
Drain-Source Diode Characteristics and Maximum Ratings						
I_S	Maximum Continuous Drain-Source Diode Forward Current		--	--	-22	A
I_{SM}	Maximum Pulsed Drain-Source Diode Forward Current		--	--	-88	A
V_{SD}	Drain-Source Diode Forward Voltage	V_{GS} = 0 V, I_S = -22 A	--	--	-4.0	V
t_{rr}	Reverse Recovery Time	V_{GS} = 0 V, I_S = -22 A, dI_F / dt = 100 A/µs	--	110	--	ns
Q_{rr}	Reverse Recovery Charge		--	0.6	--	µC

Notes:
1. Repetitive Rating : Pulse width limited by maximum junction temperature
2. L = 2.2mH, I_{AS} = -22A, V_{DD} = -25V, R_G = 25 Ω, Starting T_J = 25°C
3. I_{SD} ≤ -22A, di/dt ≤ 300A/µs, V_{DD} ≤ BV_{DSS}, Starting T_J = 25°C
4. Essentially independent of operating temperature

©2000 Fairchild Semiconductor Corporation

Typical Characteristics

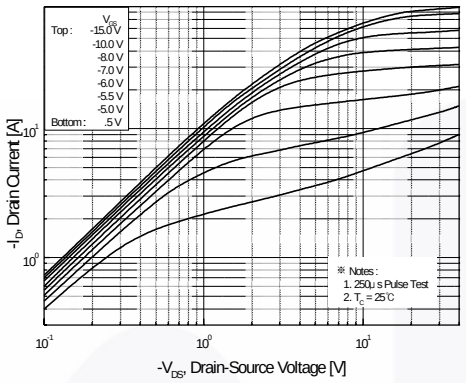

Figure 1. On-Region Characteristics

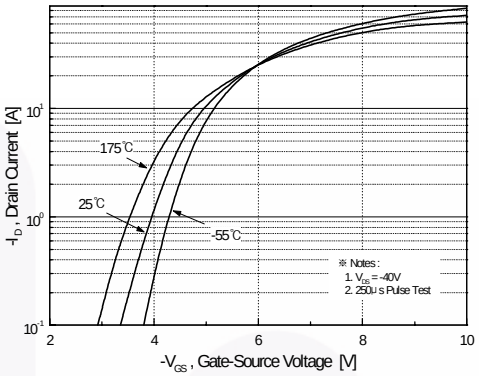

Figure 2. Transfer Characteristics

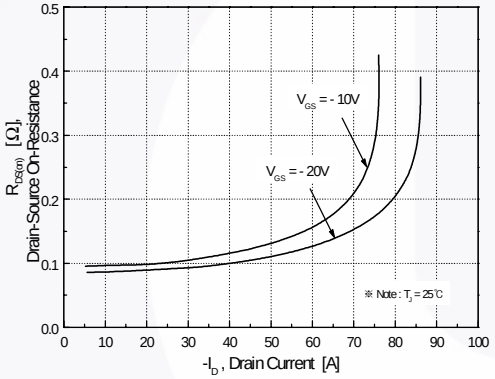

Figure 3. On-Resistance Variation vs. Drain Current and Gate Voltage

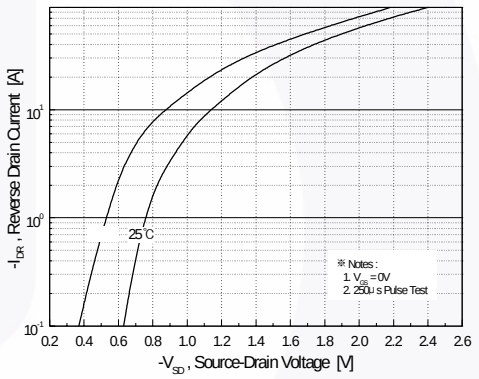

Figure 4. Body Diode Forward Voltage Variation vs. Source Current and Temperature

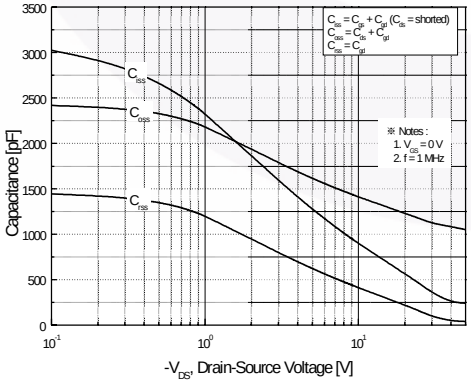

Figure 5. Capacitance Characteristics

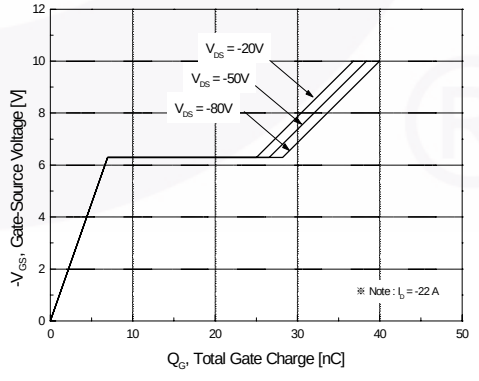

Figure 6. Gate Charge Characteristics

Typical Characteristics (Continued)

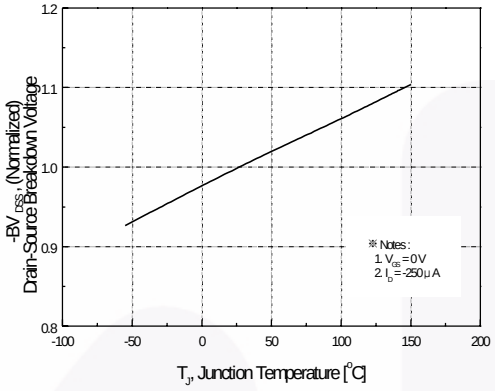

Figure 7. Breakdown Voltage Variation vs. Temperature

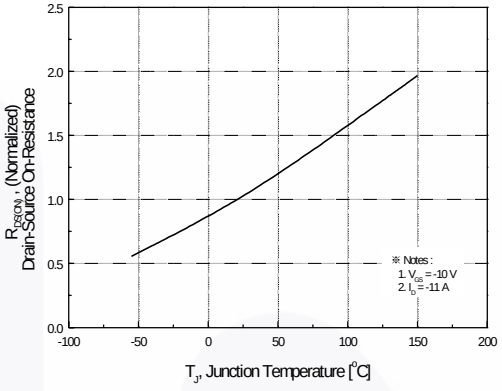

Figure 8. On-Resistance Variation vs. Temperature

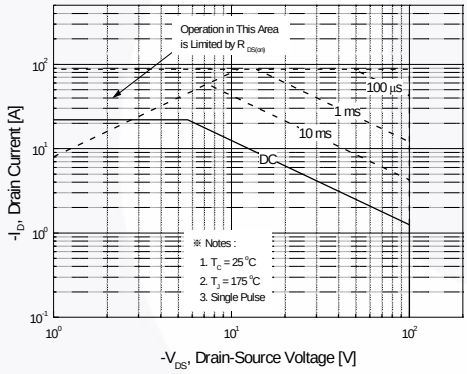

Figure 9. Maximum Safe Operating Area

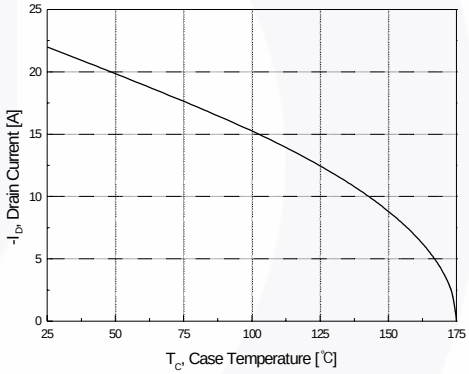

Figure 10. Maximum Drain Current vs. Case Temperature

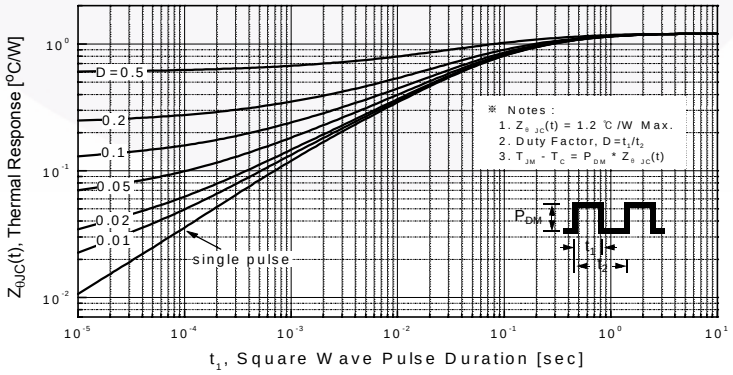

Figure 11. Transient Thermal Response Curve

Figure 12. Gate Charge Test Circuit & Waveform

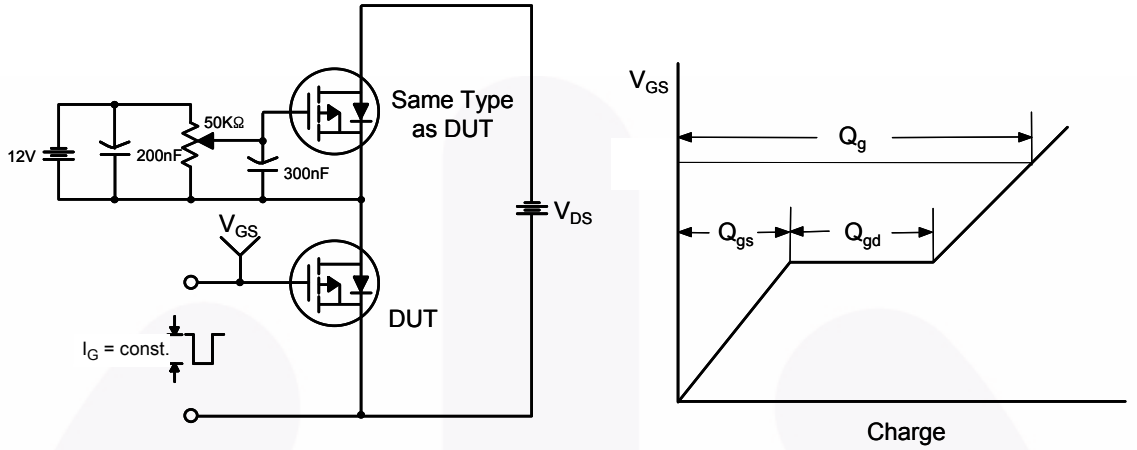

Figure 13. Resistive Switching Test Circuit & Waveforms

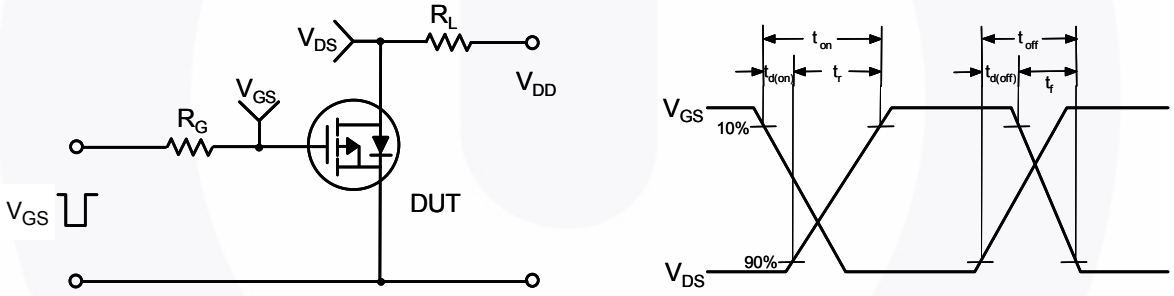

Figure 14. Unclamped Inductive Switching Test Circuit & Waveforms

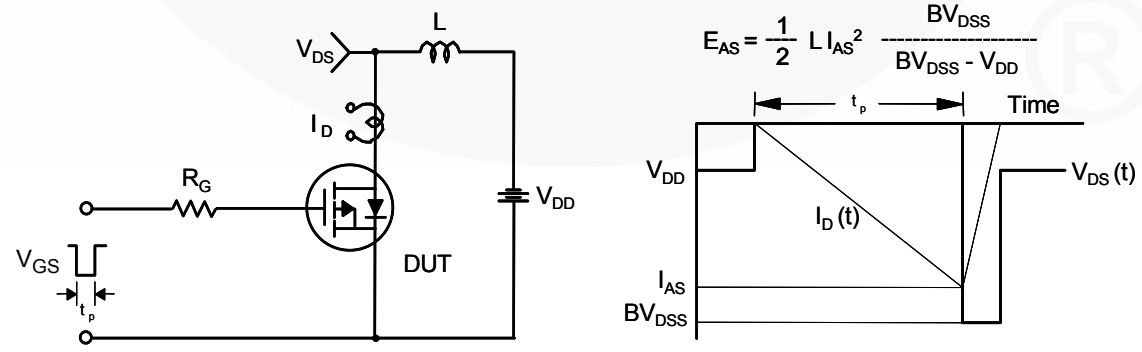

Figure 15. Peak Diode Recovery dv/dt Test Circuit & Waveforms

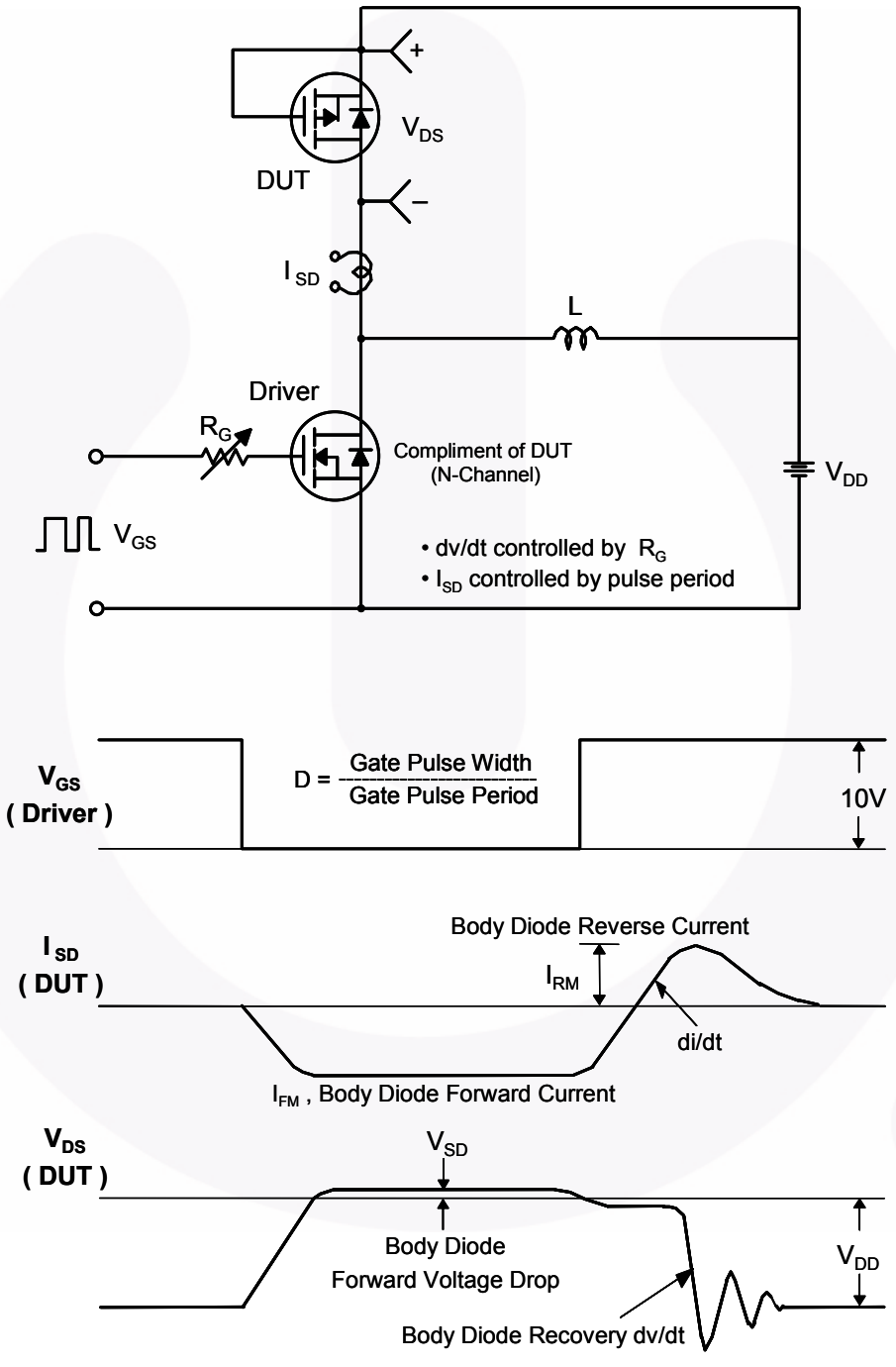

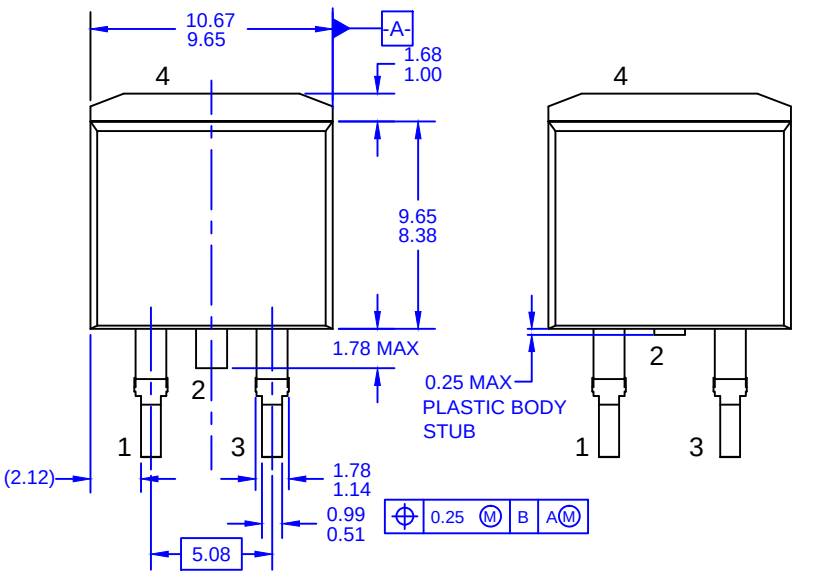

FRONT VIEW - DIODE PRODUCTS VERSION
ALTERNATIVE SUPPLIER DETAIL

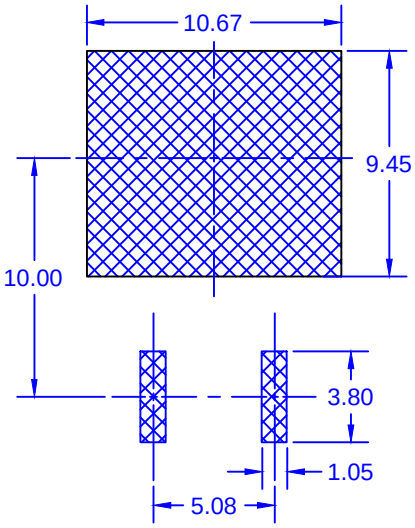

LAND PATTERN RECOMMENDATION
UNLESS NOTED, ALL DIMS TYPICAL

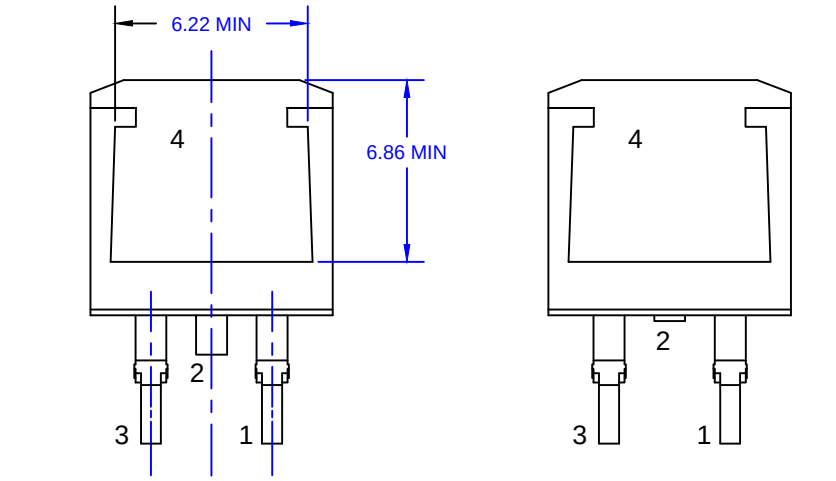

BACK VIEW - DIODE PRODUCTS VERSION
ALTERNATIVE SUPPLIER DETAIL

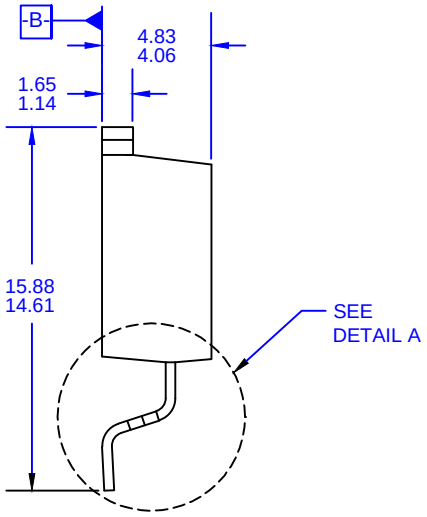

NOTES: UNLESS OTHERWISE SPECIFIED

A) ALL DIMENSIONS ARE IN MILLIMETERS.
B) REFERENCE JEDEC, TO-263, VARIATION AB.
C) DIMENSIONING AND TOLERANCING PER DIMENSIONING AND TOLERANCING PER ASME Y14.5 - 2009.
D) LOCATION OF THE PIN HOLE MAY VARY (LOWER LEFT CORNER, LOWER CENTER AND CENTER OF THE PACKAGE).
E) LANDPATTERN RECOMMENDATION PER IPC TO254P1524X482-3N
F) FILENAME: TO263A02REV8

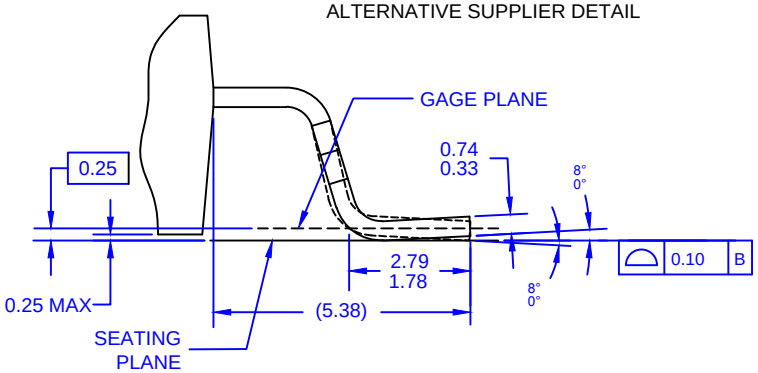

DETAIL A, ROTATED 90°
SCALE: 2X

FAIRCHILD.

ON Semiconductor and ON are trademarks of Semiconductor Components Industries, LLC dba ON Semiconductor or its subsidiaries in the United States and/or other countries. ON Semiconductor owns the rights to a number of patents, trademarks, copyrights, trade secrets, and other intellectual property. A listing of ON Semiconductor's product/patent coverage may be accessed at www.onsemi.com/site/pdf/Patent−Marking.pdf. ON Semiconductor reserves the right to make changes without further notice to any products herein. ON Semiconductor makes no warranty, representation or guarantee regarding the suitability of its products for any particular purpose, nor does ON Semiconductor assume any liability arising out of the application or use of any product or circuit, and specifically disclaims any and all liability, including without limitation special, consequential or incidental damages. Buyer is responsible for its products and applications using ON Semiconductor products, including compliance with all laws, regulations and safety requirements or standards, regardless of any support or applications information provided by ON Semiconductor. "Typical" parameters which may be provided in ON Semiconductor data sheets and/or specifications can and do vary in different applications and actual performance may vary over time. All operating parameters, including "Typicals" must be validated for each customer application by customer's technical experts. ON Semiconductor does not convey any license under its patent rights nor the rights of others. ON Semiconductor products are not designed, intended, or authorized for use as a critical component in life support systems or any FDA Class 3 medical devices or medical devices with a same or similar classification in a foreign jurisdiction or any devices intended for implantation in the human body. Should Buyer purchase or use ON Semiconductor products for any such unintended or unauthorized application, Buyer shall indemnify and hold ON Semiconductor and its officers, employees, subsidiaries, affiliates, and distributors harmless against all claims, costs, damages, and expenses, and reasonable attorney fees arising out of, directly or indirectly, any claim of personal injury or death associated with such unintended or unauthorized use, even if such claim alleges that ON Semiconductor was negligent regarding the design or manufacture of the part. ON Semiconductor is an Equal Opportunity/Affirmative Action Employer. This literature is subject to all applicable copyright laws and is not for resale in any manner.

PUBLICATION ORDERING INFORMATION

LITERATURE FULFILLMENT:
Literature Distribution Center for ON Semiconductor
19521 E. 32nd Pkwy, Aurora, Colorado 80011 USA
Phone: 303−675−2175 or 800−344−3860 Toll Free USA/Canada
Fax: 303−675−2176 or 800−344−3867 Toll Free USA/Canada
Email: orderlit@onsemi.com

N. American Technical Support: 800−282−9855 Toll Free USA/Canada
Europe, Middle East and Africa Technical Support:
Phone: 421 33 790 2910
Japan Customer Focus Center
Phone: 81−3−5817−1050

ON Semiconductor Website: **www.onsemi.com**

Order Literature: http://www.onsemi.com/orderlit

For additional information, please contact your local Sales Representative

ENTEGRECİ

Bu belge www.entegreci.com üzerinden sunulmaktadır.

Elektronik komponent tedarikinde Entegreci

Entegreci, Eskişehir merkezli, Türkiye geneline satış yapan bir elektronik komponent mağazasıdır. Entegreler (IC), mikrodenetleyiciler, transistörler, diyotlar, pasif elemanlar, konnektörler, modüller ve geliştirme kartları tek adetten seri üretim adetlerine kadar satılır. Ürün sayfalarında güncel stok durumunu, fiyatı ve datasheet bağlantısını bulabilirsiniz.

Parça koduyla arama

Üretici parça numarasını yazın; stok ve fiyatı hemen görün.

www.entegreci.com

Ürün kategorileri

Entegreden kapasitöre tüm elektronik komponent kategorileri.

Kategorilere göz atın

Üreticiler

Aradığınız üreticinin ürünlerini tek sayfada inceleyin.

Üreticileri görün

Toplu alım ve teklif

Listede olmayan ya da yüksek adetli parçalar için teklif isteyin.

Teklif isteyin

www.entegreci.com | **destek@entegreci.com** | **0850 305 90 34**

Entegreci is an online electronic components store based in Türkiye. Search by manufacturer part number to see stock, prices and datasheets for integrated circuits, microcontrollers, transistors, passive components and connectors, or request a quote for parts that are not listed.

Bu sayfa Entegreci tarafından eklenmiştir. Belgenin önceki sayfaları asıl yayıncısına aittir ve içeriği değiştirilmemiştir; en güncel sürüm için belgenin yayıncısına başvurun.