ON Semiconductor

Is Now



To learn more about onsemi™, please visit our website at
www.onsemi.com

onsemi and onsemi and other names, marks, and brands are registered and/or common law trademarks of Semiconductor Components Industries, LLC dba "**onsemi**" or its affiliates and/or subsidiaries in the United States and/or other countries. **onsemi** owns the rights to a number of patents, trademarks, copyrights, trade secrets, and other intellectual property. A listing of **onsemi** product/patent coverage may be accessed at www.onsemi.com/site/pdf/Patent-Marking.pdf. **onsemi** reserves the right to make changes at any time to any products or information herein, without notice. The information herein is provided "as-is" and **onsemi** makes no warranty, representation or guarantee regarding the accuracy of the information, product features, availability, functionality, or suitability of its products for any particular purpose, nor does **onsemi** assume any liability arising out of the application or use of any product or circuit, and specifically disclaims any and all liability, including without limitation special, consequential or incidental damages. Buyer is responsible for its products and applications using **onsemi** products, including compliance with all laws, regulations and safety requirements or standards, regardless of any support or applications information provided by **onsemi**. "Typical" parameters which may be provided in **onsemi** data sheets and/or specifications can and do vary in different applications and actual performance may vary over time. All operating parameters, including "Typicals" must be validated for each customer application by customer's technical experts. **onsemi** does not convey any license under any of its intellectual property rights nor the rights of others. **onsemi** products are not designed, intended, or authorized for use as a critical component in life support systems or any FDA Class 3 medical devices or medical devices with a same or similar classification in a foreign jurisdiction or any devices intended for implantation in the human body. Should Buyer purchase or use **onsemi** products for any such unintended or unauthorized application, Buyer shall indemnify and hold **onsemi** and its officers, employees, subsidiaries, affiliates, and distributors harmless against all claims, costs, damages, and expenses, and reasonable attorney fees arising out of, directly or indirectly, any claim of personal injury or death associated with such unintended or unauthorized use, even if such claim alleges that **onsemi** was negligent regarding the design or manufacture of the part. **onsemi** is an Equal Opportunity/Affirmative Action Employer. This literature is subject to all applicable copyright laws and is not for resale in any manner. Other names and brands may be claimed as the property of others.

ON Semiconductor®

FDS6690AS

30V N-Channel PowerTrench® SyncFET™

General Description

The FDS6690AS is designed to replace a single SO-8 MOSFET and Schottky diode in synchronous DC:DC power supplies. This 30V MOSFET is designed to maximize power conversion efficiency, providing a low $R_{DS(ON)}$ and low gate charge. The FDS6690AS includes an integrated Schottky diode using ON Semiconductor's monolithic SyncFET technology. The performance of the FDS6690AS as the low-side switch in a synchronous rectifier is close to the performance of the FDS6690A in parallel with a Schottky diode.

Applications

- DC/DC converter
- Low side notebooks

Features

- 10 A, 30 V. $R_{DS(ON)}$ max= 12 mΩ @ V_{GS} = 10 V
  $R_{DS(ON)}$ max= 15 mΩ @ V_{GS} = 4.5 V
- Includes SyncFET Schottky diode
- Low gate charge (16nC typical)
- High performance trench technology for extremely low $R_{DS(ON)}$
- High power and current handling capability

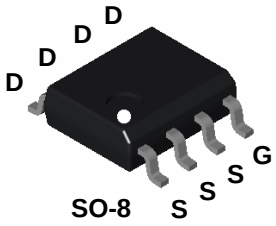

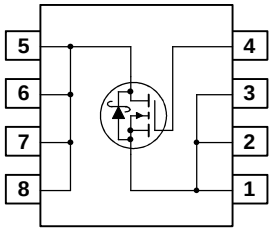

Absolute Maximum Ratings

T_A=25°C unless otherwise noted

Symbol	Parameter		Ratings	Units
V_{DSS}	Drain-Source Voltage		30	V
V_{GSS}	Gate-Source Voltage		±20	V
I_D	Drain Current – Continuous	(Note 1a)	10	A
	– Pulsed		50	
P_D	Power Dissipation for Single Operation	(Note 1a)	2.5	W
		(Note 1b)	1.2	
		(Note 1c)	1	
T_J, T_{STG}	Operating and Storage Junction Temperature Range		–55 to +150	°C

Thermal Characteristics

$R_{\theta JA}$	Thermal Resistance, Junction-to-Ambient	(Note 1a)	50	°C/W
$R_{\theta JC}$	Thermal Resistance, Junction-to-Case	(Note 1)	25	°C/W

Package Marking and Ordering Information

Device Marking	Device	Reel Size	Tape width	Quantity
FDS6690AS	FDS6690AS	13''	12mm	2500 units

©2008 Semiconductor Components Industries, LLC.
October-2017, Rev 1

Publication Order Number:
FDS6690AS/D

Electrical Characteristics

T_A = 25°C unless otherwise noted

Symbol	Parameter	Test Conditions	Min	Typ	Max	Units
Off Characteristics						
BV_{DSS}	Drain–Source Breakdown Voltage	V_{GS} = 0 V, I_D = 1 mA	30			V
$\frac{\Delta BV_{DSS}}{\Delta T_J}$	Breakdown Voltage Temperature Coefficient	I_D = 10 mA, Referenced to 25°C		30		mV/°C
I_{DSS}	Zero Gate Voltage Drain Current	V_{DS} = 24 V, V_{GS} = 0 V			500	μA
I_{GSS}	Gate–Body Leakage	V_{GS} = ±20 V, V_{DS} = 0 V			±100	nA
On Characteristics (Note 2)						
$V_{GS(th)}$	Gate Threshold Voltage	V_{DS} = V_{GS}, I_D = 1 mA	1	1.6	3	V
$\frac{\Delta V_{GS(th)}}{\Delta T_J}$	Gate Threshold Voltage Temperature Coefficient	I_D = 10 mA, Referenced to 25°C		–4		mV/°C
$R_{DS(on)}$	Static Drain–Source On–Resistance	V_{GS} = 10 V, I_D = 10 A V_{GS} = 4.5 V, I_D = 8.5 A V_{GS}=10 V, I_D =10A, T_J=125°C		10 12 15	12 15 19	mΩ
$I_{D(on)}$	On–State Drain Current	V_{GS} = 10 V, V_{DS} = 5 V	50			A
g_{FS}	Forward Transconductance	V_{DS} = 15 V, I_D = 10 A		45		S
Dynamic Characteristics						
C_{iss}	Input Capacitance	V_{DS} = 15 V, V_{GS} = 0 V, f = 1.0 MHz		910		pF
C_{oss}	Output Capacitance			270		pF
C_{rss}	Reverse Transfer Capacitance			100		pF
R_G	Gate Resistance	V_{GS} = 15 mV, f = 1.0 MHz		2.0		Ω
Switching Characteristics (Note 2)						
$t_{d(on)}$	Turn–On Delay Time	V_{DS} = 15 V, I_D = 1 A, V_{GS} = 10 V, R_{GEN} = 6 Ω		8	16	ns
t_r	Turn–On Rise Time			5	10	ns
$t_{d(off)}$	Turn–Off Delay Time			25	40	ns
t_f	Turn–Off Fall Time			6	12	ns
$t_{d(on)}$	Turn–On Delay Time	V_{DS} = 15 V, I_D = 1 A, V_{GS} = 4.5 V, R_{GEN} = 6 Ω		11	20	ns
t_r	Turn–On Rise Time			11	20	ns
$t_{d(off)}$	Turn–Off Delay Time			15	27	ns
t_f	Turn–Off Fall Time			8	16	ns
$Q_{g(TOT)}$	Total Gate Charge at Vgs=10V	V_{DD} = 15 V, I_D = 10 A		16	23	nC
Q_g	Total Gate Charge at Vgs=5V			9	13	nC
Q_{gs}	Gate–Source Charge			2.3		nC
Q_{gd}	Gate–Drain Charge			3.0		nC

Electrical Characteristics TA = 25°C unless otherwise noted

Symbol	Parameter	Test Conditions	Min	Typ	Max	Units
Drain–Source Diode Characteristics and Maximum Ratings						
I_S	Maximum Continuous Drain–Source Diode Forward Current				3.5	A
V_{SD}	Drain–Source Diode Forward Voltage	V_{GS} = 0 V, I_S = 3.5 A (Note 2)		0.6	0.7	V
T_{rr}	Diode Reverse Recovery Time	I_F = 10A,		16		nS
Q_{rr}	Diode Reverse Recovery Charge	d_{iF}/d_t = 300 A/µs (Note 3)		9		nC

Notes:

1. $R_{\theta JA}$ is the sum of the junction-to-case and case-to-ambient thermal resistance where the case thermal reference is defined as the solder mounting surface of the drain pins. $R_{\theta JC}$ is guaranteed by design while $R_{\theta CA}$ is determined by the user's board design.

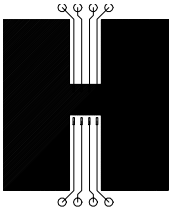

a) 50°/W when mounted on a 1 in^2 pad of 2 oz copper

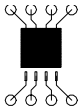

b) 105°/W when mounted on a .04 in^2 pad of 2 oz copper

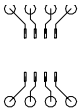

c) 125°/W when mounted on a minimum pad.

Scale 1 : 1 on letter size paper

2. Pulse Test: Pulse Width < 300µs, Duty Cycle < 2.0%

3. See "SyncFET Schottky body diode characteristics" below.

Typical Characteristics

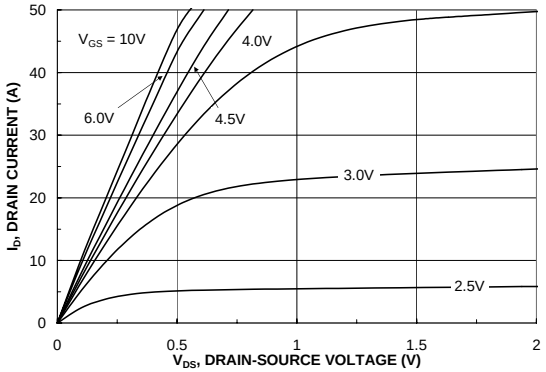

Figure 1. On-Region Characteristics.

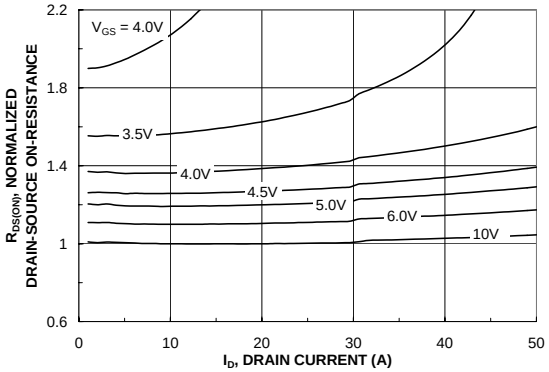

Figure 2. On-Resistance Variation with Drain Current and Gate Voltage.

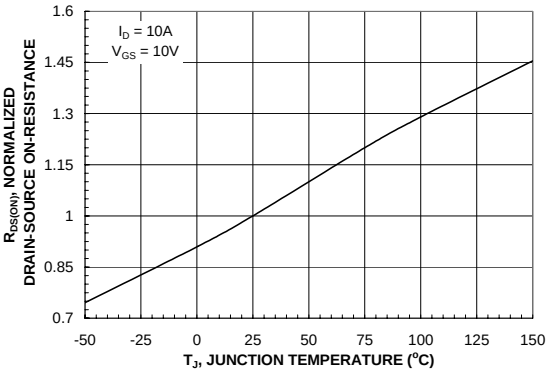

Figure 3. On-Resistance Variation with Temperature.

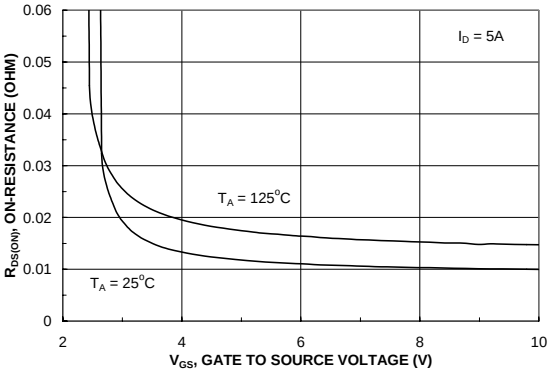

Figure 4. On-Resistance Variation with Gate-to-Source Voltage.

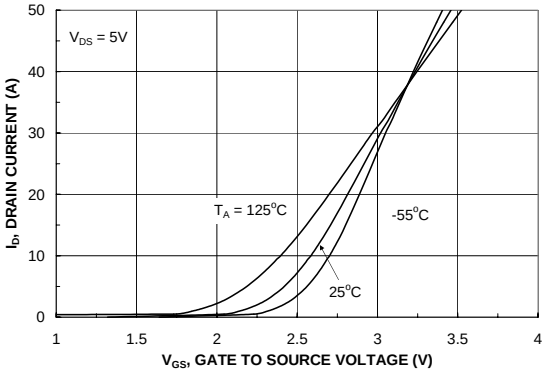

Figure 5. Transfer Characteristics.

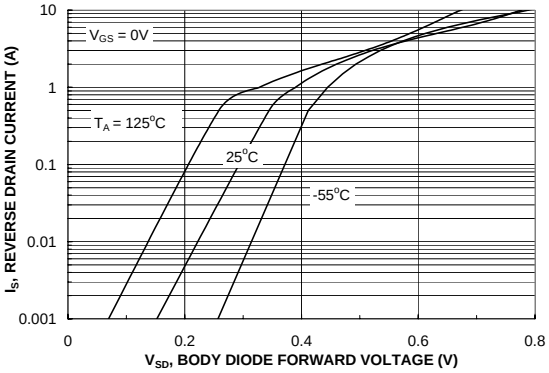

Figure 6. Body Diode Forward Voltage Variation with Source Current and Temperature.

Typical Characteristics

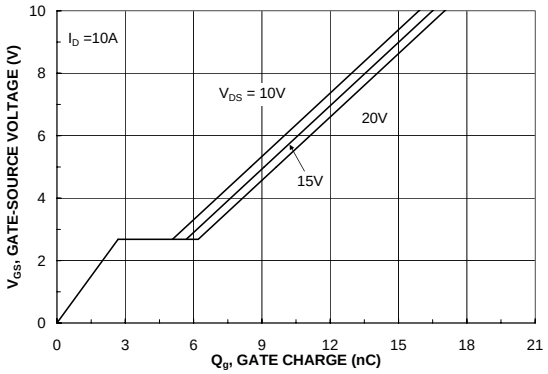

Figure 7. Gate Charge Characteristics.

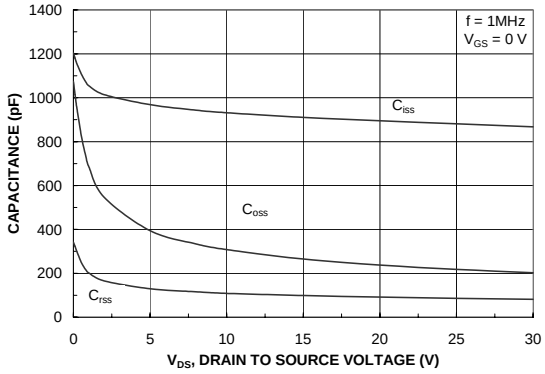

Figure 8. Capacitance Characteristics.

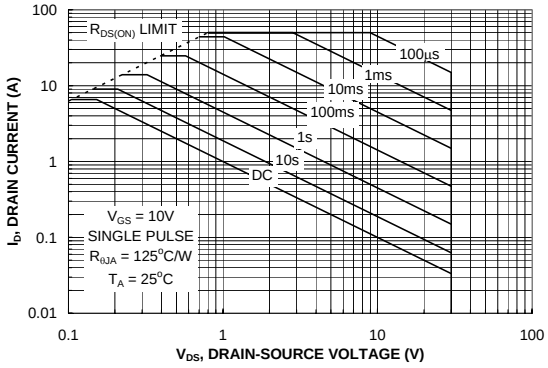

Figure 9. Maximum Safe Operating Area.

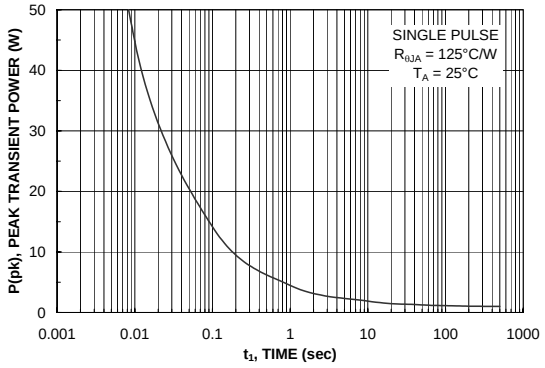

Figure 10. Single Pulse Maximum Power Dissipation.

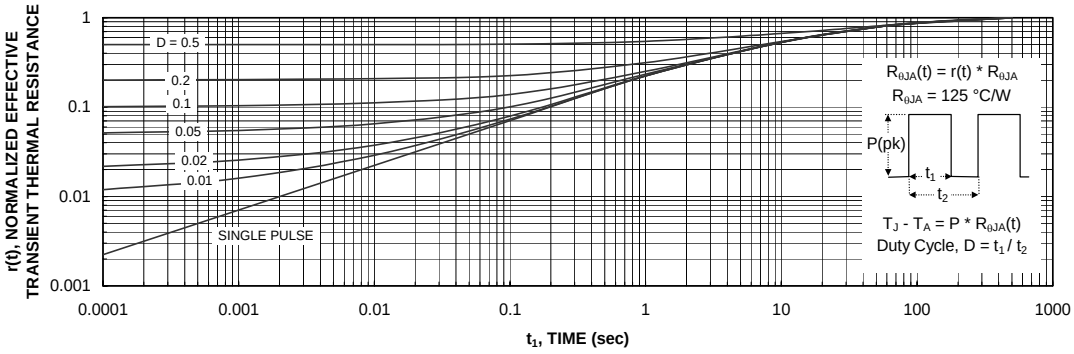

Figure 11. Transient Thermal Response Curve.

Thermal characterization performed using the conditions described in Note 1c.
Transient thermal response will change depending on the circuit board design.

Typical Characteristics (continued)

SyncFET Schottky Body Diode Characteristics

ON Semiconductor's SyncFET process embeds a Schottky diode in parallel with PowerTrench MOSFET. This diode exhibits similar characteristics to a discrete external Schottky diode in parallel with a MOSFET. Figure 12 shows the reverse recovery characteristic of the FDS6690AS.

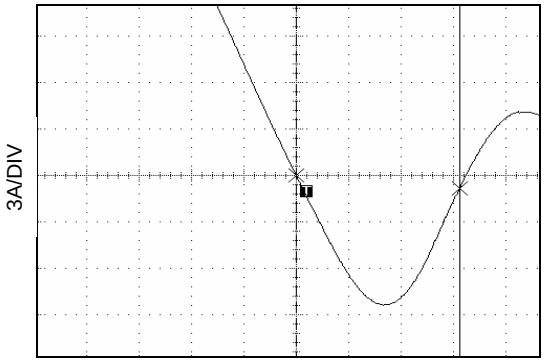

Figure 12. FDS6690AS SyncFET body diode reverse recovery characteristic.

For comparison purposes, Figure 13 shows the reverse recovery characteristics of the body diode of an equivalent size MOSFET produced without SyncFET (FDS6690A).

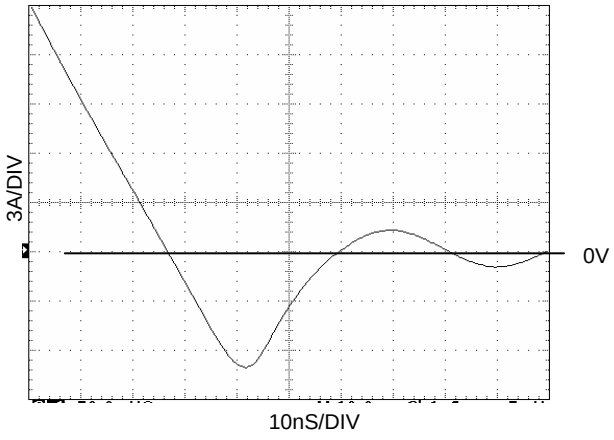

Figure 13. Non-SyncFET (FDS6690A) body diode reverse recovery characteristic.

Schottky barrier diodes exhibit significant leakage at high temperature and high reverse voltage. This will increase the power in the device.

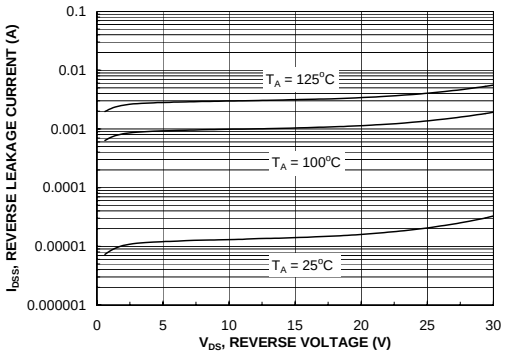

Figure 14. SyncFET body diode reverse leakage versus drain-source voltage and temperature.

Typical Characteristics

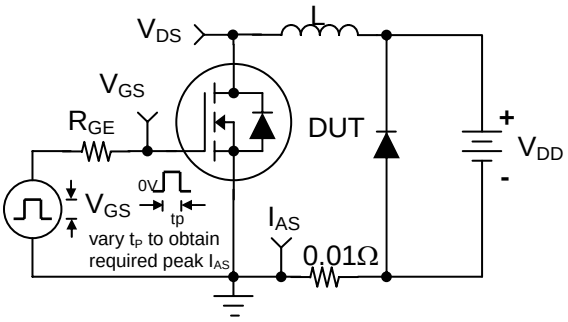

Figure 15. Unclamped Inductive Load Test Circuit

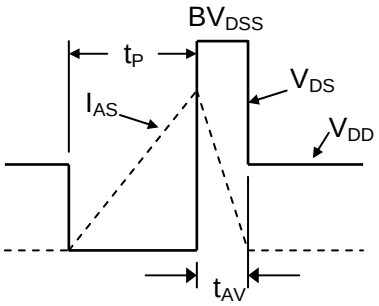

Figure 16. Unclamped Inductive Waveforms

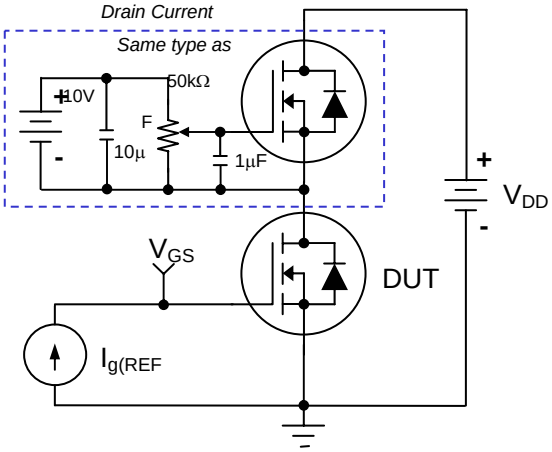

Figure 17. Gate Charge Test Circuit

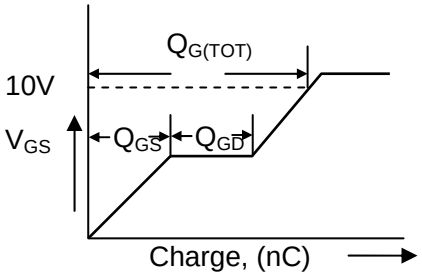

Figure 18. Gate Charge Waveform

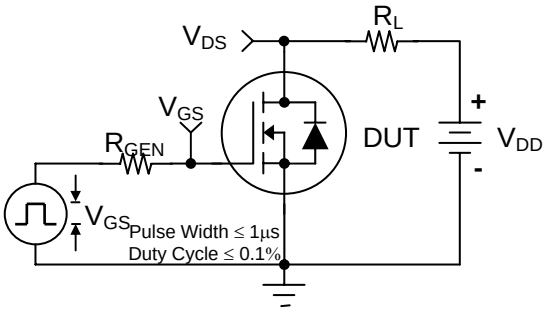

Figure 19. Switching Time Test Circuit

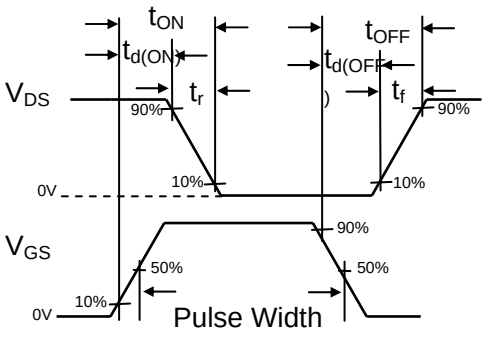

Figure 20. Switching Time Waveforms

ON Semiconductor and ON are trademarks of Semiconductor Components Industries, LLC dba ON Semiconductor or its subsidiaries in the United States and/or other countries. ON Semiconductor owns the rights to a number of patents, trademarks, copyrights, trade secrets, and other intellectual property. A listing of ON Semiconductor's product/patent coverage may be accessed at www.onsemi.com/site/pdf/Patent−Marking.pdf. ON Semiconductor reserves the right to make changes without further notice to any products herein. ON Semiconductor makes no warranty, representation or guarantee regarding the suitability of its products for any particular purpose, nor does ON Semiconductor assume any liability arising out of the application or use of any product or circuit, and specifically disclaims any and all liability, including without limitation special, consequential or incidental damages. Buyer is responsible for its products and applications using ON Semiconductor products, including compliance with all laws, regulations and safety requirements or standards, regardless of any support or applications information provided by ON Semiconductor. "Typical" parameters which may be provided in ON Semiconductor data sheets and/or specifications can and do vary in different applications and actual performance may vary over time. All operating parameters, including "Typicals" must be validated for each customer application by customer's technical experts. ON Semiconductor does not convey any license under its patent rights nor the rights of others. ON Semiconductor products are not designed, intended, or authorized for use as a critical component in life support systems or any FDA Class 3 medical devices or medical devices with a same or similar classification in a foreign jurisdiction or any devices intended for implantation in the human body. Should Buyer purchase or use ON Semiconductor products for any such unintended or unauthorized application, Buyer shall indemnify and hold ON Semiconductor and its officers, employees, subsidiaries, affiliates, and distributors harmless against all claims, costs, damages, and expenses, and reasonable attorney fees arising out of, directly or indirectly, any claim of personal injury or death associated with such unintended or unauthorized use, even if such claim alleges that ON Semiconductor was negligent regarding the design or manufacture of the part. ON Semiconductor is an Equal Opportunity/Affirmative Action Employer. This literature is subject to all applicable copyright laws and is not for resale in any manner.

PUBLICATION ORDERING INFORMATION

LITERATURE FULFILLMENT:
Literature Distribution Center for ON Semiconductor
19521 E. 32nd Pkwy, Aurora, Colorado 80011 USA
Phone: 303−675−2175 or 800−344−3860 Toll Free USA/Canada
Fax: 303−675−2176 or 800−344−3867 Toll Free USA/Canada
Email: orderlit@onsemi.com

N. American Technical Support: 800−282−9855 Toll Free USA/Canada
Europe, Middle East and Africa Technical Support:
Phone: 421 33 790 2910
Japan Customer Focus Center
Phone: 81−3−5817−1050

ON Semiconductor Website: **www.onsemi.com**

Order Literature: http://www.onsemi.com/orderlit

For additional information, please contact your local Sales Representative

ENTEGRECİ

Bu belge www.entegreci.com üzerinden sunulmaktadır.

Elektronik komponent tedarikinde Entegreci

Entegreci, Eskişehir merkezli, Türkiye geneline satış yapan bir elektronik komponent mağazasıdır. Entegreler (IC), mikrodenetleyiciler, transistörler, diyotlar, pasif elemanlar, konnektörler, modüller ve geliştirme kartları tek adetten seri üretim adetlerine kadar satılır. Ürün sayfalarında güncel stok durumunu, fiyatı ve datasheet bağlantısını bulabilirsiniz.

Parça koduyla arama

Üretici parça numarasını yazın; stok ve fiyatı hemen görün.

www.entegreci.com

Ürün kategorileri

Entegreden kapasitöre tüm elektronik komponent kategorileri.

Kategorilere göz atın

Üreticiler

Aradığınız üreticinin ürünlerini tek sayfada inceleyin.

Üreticileri görün

Toplu alım ve teklif

Listede olmayan ya da yüksek adetli parçalar için teklif isteyin.

Teklif isteyin

www.entegreci.com | **destek@entegreci.com** | **0850 305 90 34**

Entegreci is an online electronic components store based in Türkiye. Search by manufacturer part number to see stock, prices and datasheets for integrated circuits, microcontrollers, transistors, passive components and connectors, or request a quote for parts that are not listed.

Bu sayfa Entegreci tarafından eklenmiştir. Belgenin önceki sayfaları asıl yayıncısına aittir ve içeriği değiştirilmemiştir; en güncel sürüm için belgenin yayıncısına başvurun.