MOSFET – Power, N-Channel, POWERTRENCH®

100 V, 80 A, 9 mΩ

FDH3632, FDP3632, FDB3632

V_{DSS}	$R_{DS(ON)}$ MAX	I_D MAX
100 V	9 mΩ	80 A

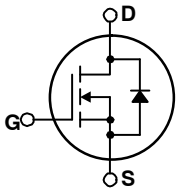

Features

- $R_{DS(ON)}$ = 7.5 mΩ (Typ.), V_{GS} = 10 V, I_D = 80 A
- Q_g (tot) = 84 nC (Typ.), V_{GS} = 10 V
- Low Miller Charge
- Low Q_{rr} Body Diode
- UIS Capability (Single Pulse and Repetitive Pulse)
- These Devices are Pb−Free and are RoHS Compliant

Applications

- Synchronous Rectification
- Battery Protection Circuit
- Motor Drives and Uninterruptible Power Supplies
- Micro Solar Inverter

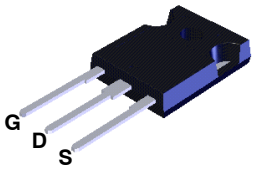

TO−247−3
CASE 340CK

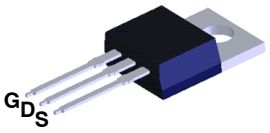

TO−220−3
CASE 340AT

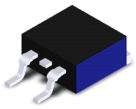

D2PAK−3
CASE 418AJ

MOSFET MAXIMUM RATINGS (T_C = 25°C, Unless otherwise noted)

Symbol	Parametr	Conditions	Value	Unit
V_{DSS}	Drain to Source Voltage		100	V
V_{GS}	Gate to Source Voltage		±20	V
I_D	Drain Current	− Continuous (T_C < 111°C, V_{GS} = 10 V)	80	A
		− Continuous (T_{amb} = 25°C, V_{GS} = 10 V, $R_{\theta JA}$ = 43°C/W)	12	
I_D	Drain Current	− Pulsed	Figure 4	A
E_{AS}	Single Pulse Avalanche Energy (Note 1)		337	mJ
P_D	Power Dissipation	(T_C = 25°C)	310	W
		− Derate Above 25°C	2.07	W/°C
T_J, T_{STG}	Operating and Storage Temperature Range		−55 to +175	°C

Stresses exceeding those listed in the Maximum Ratings table may damage the device. If any of these limits are exceeded, device functionality should not be assumed, damage may occur and reliability may be affected.

1. Starting T_J = 25°C, L = 0.12mH, I_{AS} = 75 A, V_{DD} = 80 V.

MARKING DIAGRAM

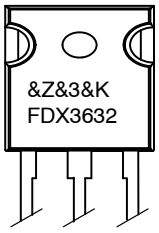

&Z	= Assembly Plant Code
&3	= Data Code (Year & Week)
&K	= Lot
FDX3632	= Specific Device Code X = H/P/B

ORDERING INFORMATION

Device	Package	Shipping†
FDB3632	D2−PAK (Pb−Free)	800 / Tape & Reel
FDP3632	TO−220 (Pb−Free)	50 Units / Tube
FDH3632	TO−247 (Pb−Free)	30 Units/ Tube

†For information on tape and reel specifications, including part orientation and tape sizes, please refer to our Tape and Reel Packaging Specification Brochure, BRD8011/D.

© Semiconductor Components Industries, LLC, 2017

THERMAL CHARACTERISTICS

Symbol	Parameter	Value	Unit
$R_{\theta JC}$	Thermal Resistance, Junction to Case, Max. TO−220, D^2−PAK, TO−247	0.48	°C/W
$R_{\theta JA}$	Thermal Resistance, Junction to Ambient, Max. TO−220 (Note 2)	62	°C/W
$R_{\theta JA}$	Thermal Resistance, Junction to Ambient, D^2−PAK, Max. 1 in^2 copper pad area	43	°C/W
$R_{\theta JA}$	Thermal Resistance, Junction to Ambient, Max. TO−247 (Note 2)	30	°C/W

2. Pulse Width = 100 s

ELECTRICAL CHARACTERISTICS (T_C = 25°C unless otherwise noted)

Symbol	Parameter	Test Conditions	Min.	Typ.	Max.	Unit
OFF CHARACTERISTICS						
B_{VDSS}	Drain to Source Breakdown Voltage	I_D = 250 μA, V_{GS} = 0 V	100	–	–	V
I_{DSS}	Zero Gate Voltage Drain Current	V_{DS} = 80 V, V_{GS} = 0 V	–	–	1	μA
		V_{DS} = 80 V, V_{GS} = 0 V, T_C = 150°C	–	–	250	
I_{GSS}	Gate to Source Leakage Current	V_{GS} = ±20 V	–	–	±100	nA
ON CHARACTERISTICS						
$V_{GS(TH)}$	Gate to Source Threshold Voltage	V_{GS} = V_{DS}, I_D = 250 μA	2.0		4.0	V
$R_{DS(ON)}$	Drain to Source On Resistance	I_D = 80 A, V_{GS} = 10 V	–	0.0075	0.009	Ω
		I_D = 40 V, V_{GS} = 6 V	–	0.009	0.015	
		I_D = 80 A, V_{GS} = 10 V, T_C = 175 °C	–	0.018	0.022	
DYNAMIC CHARACTERISTICS						
C_{iss}	Input Capacitance	V_{DS} = 25 V, V_{GS} = 0 V, f = 1 MHz	–	6000	–	pF
C_{oss}	Output Capacitance		–	820	–	pF
C_{rss}	Reverse Transfer Capacitance		–	200		pF
$Q_{g(tot)}$	Total Gate Charge at 10 V	V_{GS} = 0 V to 10 V, V_{DD} = 50 V, I_D = 80 A, I_g = 1 mA	–	84	110	nC
$Q_{g(th)}$	Threshold Gate Charge	V_{GS} = 0 V to 2 V, V_{DD} = 50 V, I_D = 80 A, I_g = 1 mA	–	11	14	nC
Q_{gs}	Gate to Source Gate Charge	V_{DD} = 50 V, I_D = 80 A, I_g = 1 mA	–	30	–	nC
Q_{gs2}	Gate Charge Threshold to Plateau		–	20	–	nC
Q_{gd}	Gate to Drain “Miller” Charge		–	20	–	nC
RESISTIVE SWITCHING CHARACTERISTICS (V_{GS} = 10 V)						
t_{ON}	Turn-On Time	V_{DD} = 50 V, I_D = 80 A, V_{GS} = 10 V, R_{GS} = 3.6 Ω	–	–	102	ns
$t_{d(ON)}$	Turn-On Delay Time		–	30	–	ns
t_r	Rise Time		–	39	–	ns
$t_{d(OFF)}$	Turn-Off Delay Time		–	96	–	ns
t_f	Fall Time		–	46	–	ns
t_{OFF}	Turn-Off Time		–	–	213	ns
DRAIN−SOURCE DIODE CHARACTERISTICS						
V_{SD}	Source to Drain Diode Voltage	I_{SD} = 80 A	–	–	1.25	V
		I_{SD} = 40 A	–	–	1	V
t_{rr}	Reverse Recovery Time	I_{SD} = 75 A, dI_{SD}/dt = 100 A/μs	–	–	64	ns
Q_{RR}	Reverse Recovered Charge		–	–	120	nC

Product parametric performance is indicated in the Electrical Characteristics for the listed test conditions, unless otherwise noted. Product performance may not be indicated by the Electrical Characteristics if operated under different conditions.

Share Feedback
Your Opinion Matters

TYPICAL CHARACTERISTICS

T_C = 25°C unless otherwise noted

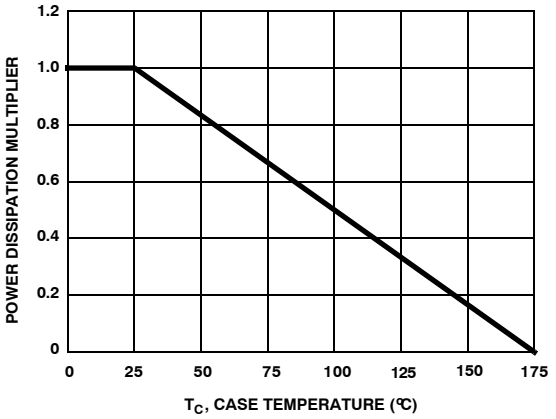

Figure 1. Normalized Power Dissipation vs. Ambient Temperature

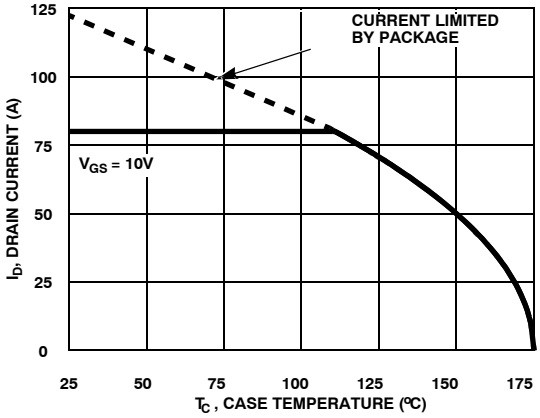

Figure 2. Maximum Continuous Drain Current vs Case Temperature

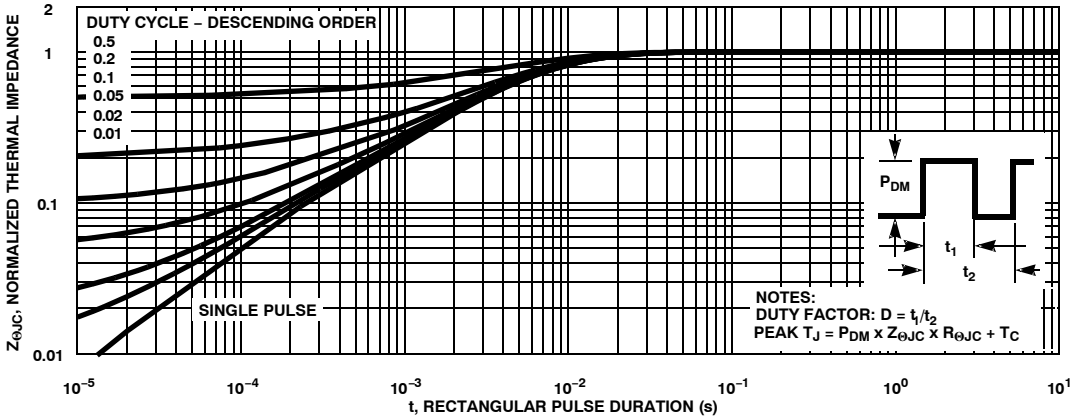

Figure 3. Normalized Maximum Transient Thermal Impedance

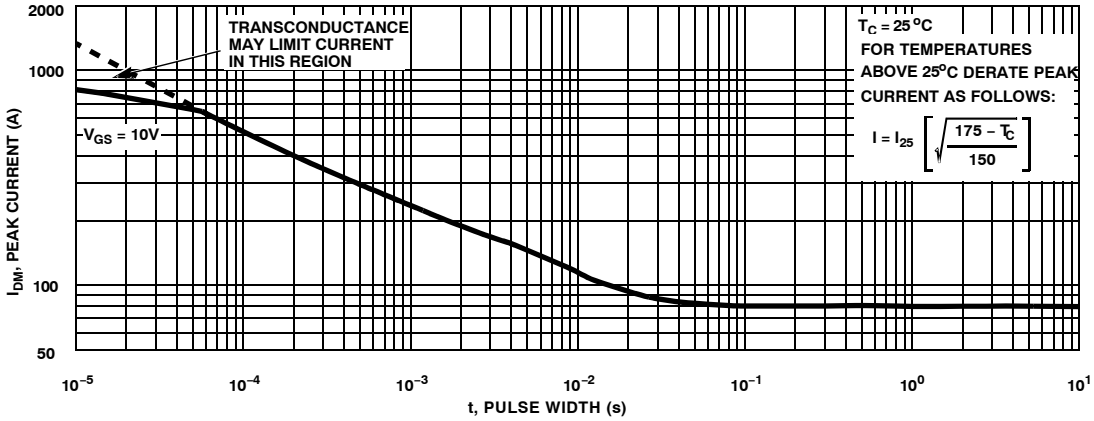

Figure 4. Peak Current Capability

Share Feedback
Your Opinion Matters

TYPICAL CHARACTERISTICS (Continued)

T_C = 25°C unless otherwise noted

NOTE: Refer to **onsemi** Application Notes AN−7514 and AN−7515

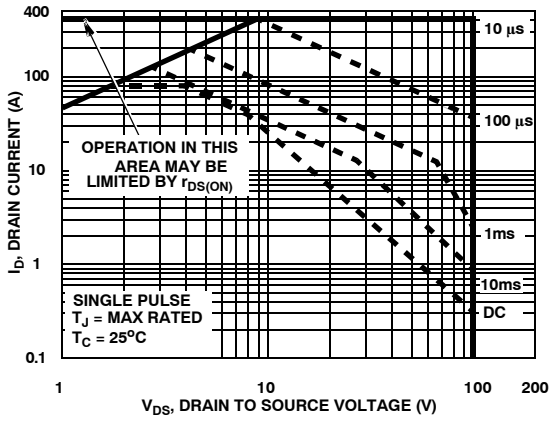

Figure 5. Forward Bias Safe Operating Area

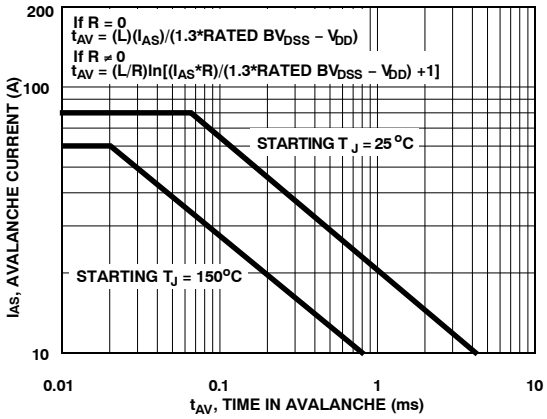

Figure 6. Unclamped Inductive Switching Capability

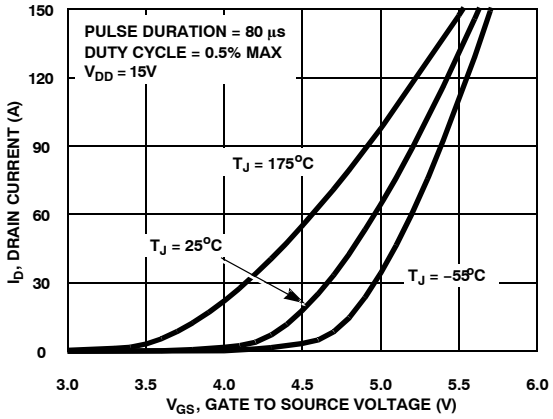

Figure 7. Transfer Characteristics

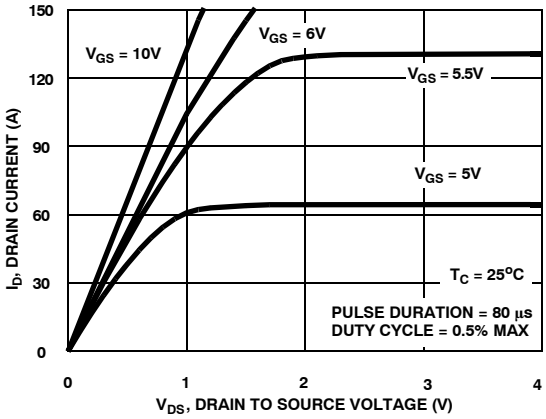

Figure 8. Saturation Characteristics

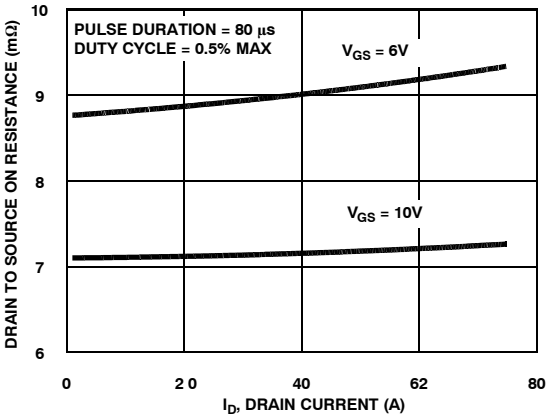

Figure 9. Drain to Source On Resistance vs Drain Current

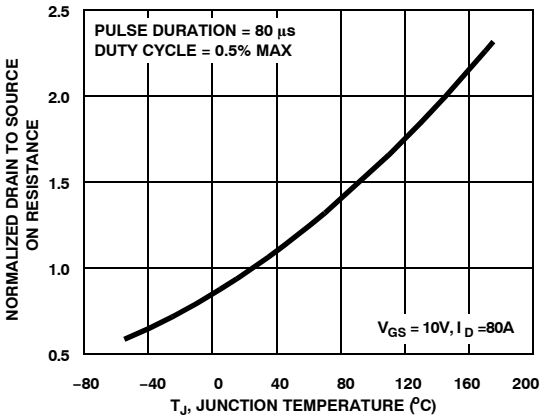

Figure 10. Normalized Drain to Source On Resistance vs Junction Temperature

Share Feedback
Your Opinion Matters

TYPICAL CHARACTERISTICS (Continued)

T_C = 25°C unless otherwise noted

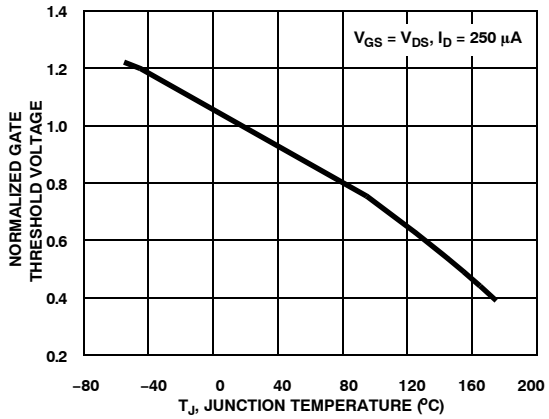

Figure 11. Normalized Gate Threshold Voltage vs. Junction Temperature

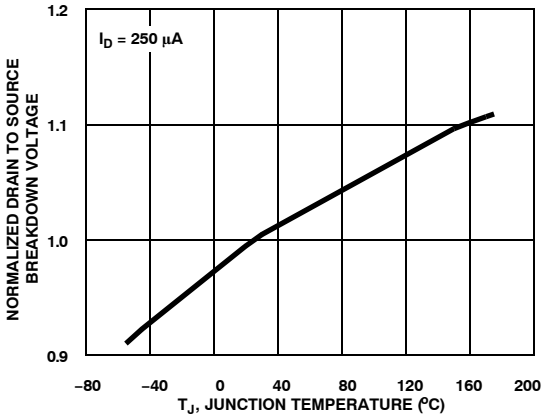

Figure 12. Normalized Drain to Source Breakdown Voltage vs Junction Temperature

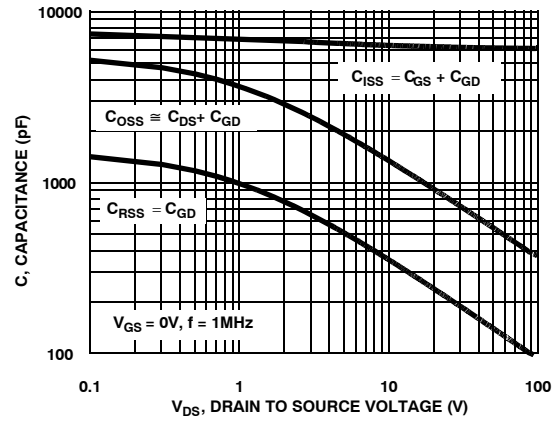

Figure 13. Capacitance vs. Drain to Source Voltage

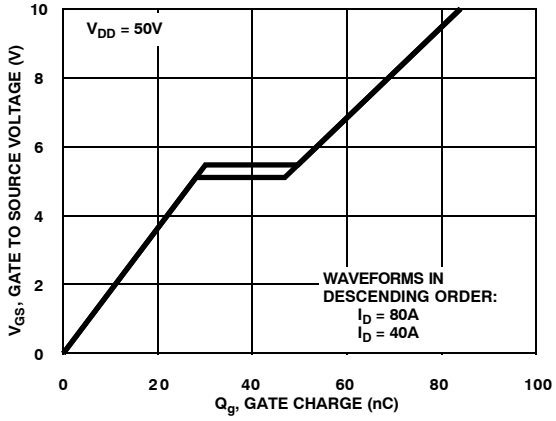

Figure 14. Gate Charge Waveforms for Constant Gate Currents

Share Feedback
Your Opinion Matters

TEST CIRCUITS WAVEFORMS

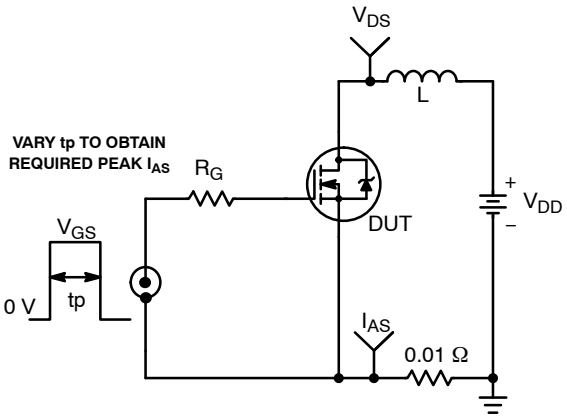

Figure 15. Unclamped Energy Test Curcuit

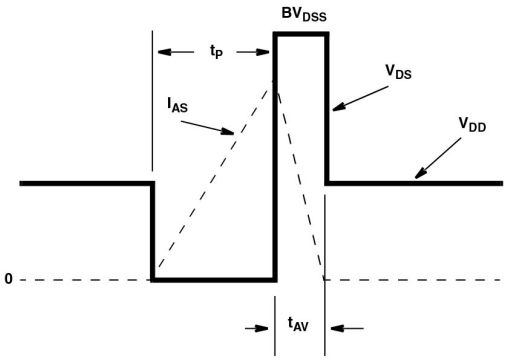

Figure 16. Unclamped Energy Waveforms

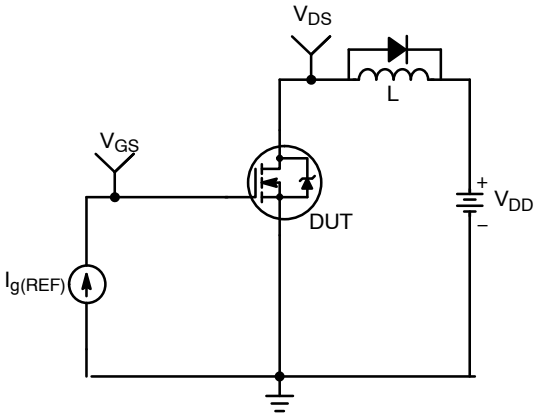

Figure 17. Gate Charge Test Circuit

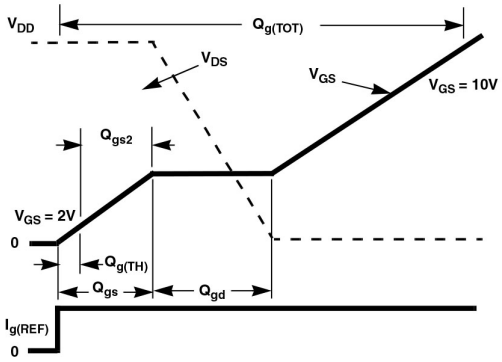

Figure 18. Gate Charge Waveforms

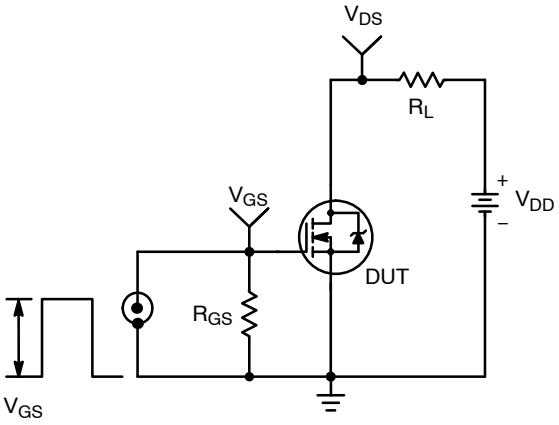

Figure 19. Switching Time Test Circuit

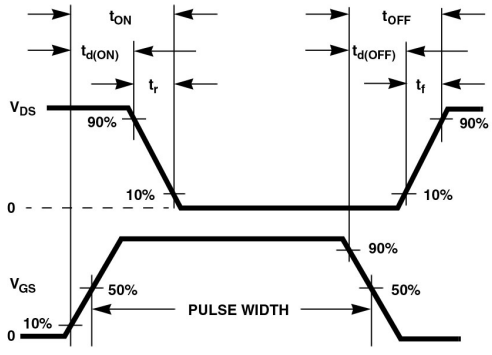

Figure 20. Switching Time Waveforms

Share Feedback
Your Opinion Matters

Thermal Resistance vs. Mounting Pad Area

The maximum rated junction temperature, TJM, and the thermal resistance of the heat dissipating path determines the maximum allowable device power dissipation, PDM, in an application. Therefore the application's ambient temperature, TA (°C), and thermal resistance $R_{\theta JA}$ (°C/W) must be reviewed to ensure that T_{JM} is never exceeded. Equation 1 mathematically represents the relationship and serves as the basis for establishing the rating of the part.

$$P_{DM} = \frac{(T_{JM} - T_A)}{R_{\Theta JA}} \qquad \text{(eq. 1)}$$

In using surface mount devices such as the TO−263 package, the environment in which it is applied will have a significant influence on the parts current and maximum power dissipation ratings. Precise determination of PDM is complex and influenced by many factors:

1. Mounting pad area onto which the device is attached and whether there is copper on one side or both sides of the board.
2. The number of copper layers and the thickness of the board.
3. The use of external heat sinks.
4. The use of thermal vias.
5. Air flow and board orientation.
6. For non steady state applications, the pulse width, the duty cycle and the transient thermal response of the part, the board and the environment they are in.

onsemi provides thermal information to assist the designer's preliminary application evaluation. Figure 21 defines the $R_{\theta JA}$ for the device as a function of the top copper (component side) area. This is for a horizontally positioned FR−4 board with 1 oz copper after 1000 seconds of steady state power with no air flow. This graph provides the necessary information for calculation of the steady state junction temperature or power dissipation. Pulse applications can be evaluated using the **onsemi** device Spice thermal model or manually utilizing the normalized maximum transient thermal impedance curve.

Thermal resistances corresponding to other copper areas can be obtained from Figure 21 or by calculation using Equation 2 or 3. Equation 2 is used for copper area defined in inches square and equation 3 is for area in centimeter square. The area, in square inches or square centimeters is the top copper area including the gate and source pads.

$$R_{\Theta JA} = 26.51 + \frac{19.84}{(0.262 + \text{Area})} \qquad \text{(eq. 2)}$$

Area in in^2.

$$R_{\Theta JA} = 26.51 + \frac{128}{(1.69 + \text{Area})} \qquad \text{(eq. 3)}$$

Area in cm^2.

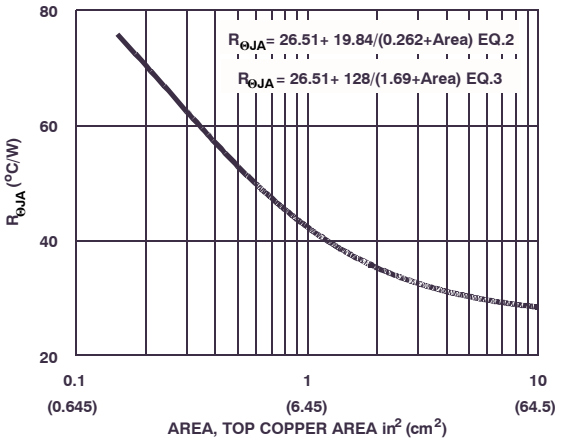

Figure 21. Thermal Resistance vs. Mounting Pad Area

Share Feedback
Your Opinion Matters

PSPICE Electrical Model

```
.SUBCKT FDB3632 2 1 3 ; rev May 2002

CA 12 8 1.7e−9
Cb 15 14 2.5e−9
Cin 6 8 6.0e−9

Dbody 7 5 DbodyMOD
Dbreak 5 11 DbreakMOD
Dplcap 10 5 DplcapMOD

Ebreak 11 7 17 18 102.5
Eds 14 8 5 8 1
Egs 13 8 6 8 1
Esg 6 10 6 8 1
Evthres 6 21 19 8 1
Evtemp 20 6 18 22 1

It 8 17 1

Lgate 1 9 5.61e−9
Ldrain 2 5 1.0e−9
Lsource 3 7 2.7e−9

RLgate 1 9 56.1
RLdrain 2 5 10
RLsource 3 7 27

Mmed 16 6 8 8 MmedMOD
Mstro 16 6 8 8 MstroMOD
Mweak 16 21 8 8 MweakMOD

Rbreak 17 18 RbreakMOD 1
Rdrain 50 16 RdrainMOD 3.8e−3
Rgate 9 20 1.1
RSLC1 5 51 RSLCMOD 1.0e−6
RSLC2 5 50 1.0e3
Rsource 8 7 RsourceMOD 2.5e−3
Rvthres 22 8 RvthresMOD 1
Rvtemp 18 19 RvtempMOD 1
S1a 6 12 13 8 S1AMOD
S1b 13 12 13 8 S1BMOD
S2a 6 15 14 13 S2AMOD
S2b 13 15 14 13 S2BMOD

Vbat 22 19 DC 1

ESLC 51 50 VALUE={(V(5,51)/ABS(V(5,51)))*(PWR(V(5,51)/(1e−6*350),3))}

.MODEL DbodyMOD D (IS=5.9E−11 N=1.07 RS=2.3e−3 TRS1=3.0e−3 TRS2=1.0e−6
+ CJO=4e−9 M=0.58 TT=4.8e−8 XTI=4.2)
.MODEL DbreakMOD D (RS=0.17 TRS1=3.0e−3 TRS2=−8.9e−6)
.MODEL DplcapMOD D (CJO=15e−10 IS=1.0e−30 N=10 M=0.6)

.MODEL MstroMOD NMOS (VTO=4.1 KP=200 IS=1e−30 N=10 TOX=1 L=1u W=1u)
.MODEL MmedMOD NMOS (VTO=3.4 KP=10.0 IS=1e−30 N=10 TOX=1 L=1u W=1u RG=1.1)
.MODEL MweakMOD NMOS (VTO=2.75 KP=0.05 IS=1e−30 N=10 TOX=1 L=1u W=1u RG=1.1e+1 RS=0.1)

.MODEL RbreakMOD RES (TC1=1.0e−3 TC2=−1.7e−6)
.MODEL RdrainMOD RES (TC1=8.5e−3 TC2=2.8e−5)
.MODEL RSLCMOD RES (TC1=2.0e−3 TC2=2.0e−6)
```


Share Feedback
Your Opinion Matters

.MODEL RsourceMOD RES (TC1=4e−3 TC2=1e−6)
.MODEL RvthresMOD RES (TC1=−4.0e−3 TC2=−1.8e−5)
.MODEL RvtempMOD RES (TC1=−4.4e−3 TC2=2.2e−6)

.MODEL S1AMOD VSWITCH (RON=1e−5 ROFF=0.1 VON=−4 VOFF=−2)
.MODEL S1BMOD VSWITCH (RON=1e−5 ROFF=0.1 VON=−2 VOFF=−4)
.MODEL S2AMOD VSWITCH (RON=1e−5 ROFF=0.1 VON=−0.8 VOFF=0.4)
.MODEL S2BMOD VSWITCH (RON=1e−5 ROFF=0.1 VON=0.4 VOFF=−0.8)
.ENDS

NOTE: For further discussion of the PSPICE model, consult A New PSPICE Sub−Circuit for the Power MOSFET Featuring Global Temperature Options; IEEE Power Electronics Specialist Conference Records, 1991, written by William J. Hepp and C. Frank Wheatley.

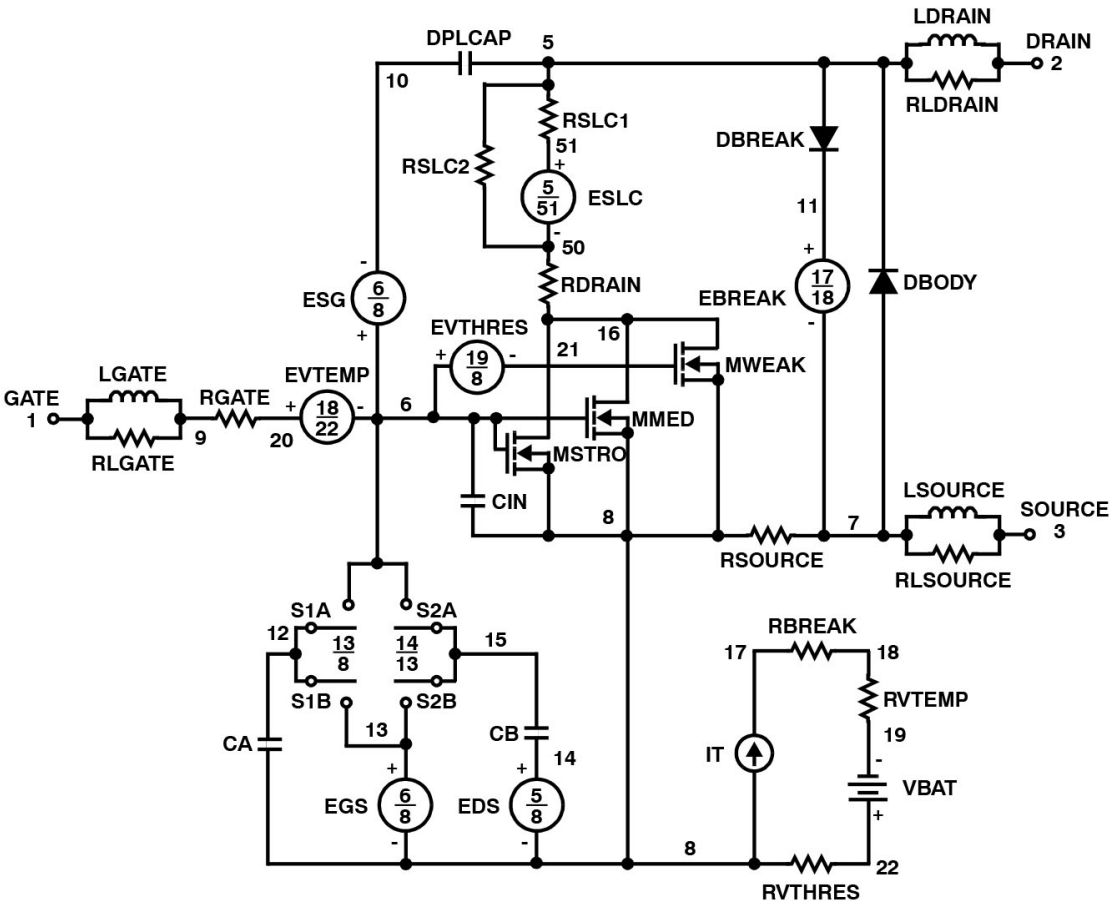

Figure 22. PSPICE Electrical Model

Share Feedback
Your Opinion Matters

SABER Electrical Model

```
REV May 2002
template FDB3632 n2,n1,n3
electrical n2,n1,n3
{
var i iscl
dp..model dbodymod = (isl=5.9e−11,nl=1.07,rs=2.3e−3,trs1=3.0e−3,trs2=1.0e−6,cjo=4e−9,m=0.58,tt=4.8e−8,xti=4.2)
dp..model dbreakmod = (rs=0.17,trs1=3.0e−3,trs2=−8.9e−6)
dp..model dplcapmod = (cjo=15e−10,isl=10.0e−30,nl=10,m=0.6)
m..model mstrongmod = (type=_n,vto=4.1,kp=200,is=1e−30, tox=1)
m..model mmedmod = (type=_n,vto=3.4,kp=10.0,is=1e−30, tox=1)
m..model mweakmod = (type=_n,vto=2.75,kp=0.05,is=1e−30, tox=1,rs=0.1)
sw_vcsp..model s1amod = (ron=1e−5,roff=0.1,von=−4,voff=−2)
sw_vcsp..model s2amod = (ron=1e−5,roff=0.1,von=−0.8,voff=0.4)
sw_vcsp..model s2bmod = (ron=1e−5,roff=0.1,von=0.4,voff=−0.8)
c.ca n12 n8 = 1.7e−9
c.cb n15 n14 = 2.5e−9
c.cin n6 n8 = 6.0e−9

dp.dbody n7 n5 = model=dbodymod
dp.dbreak n5 n11 = model=dbreakmod
dp.dplcap n10 n5 = model=dplcapmod

spe.ebreak n11 n7 n17 n18 = 102.5
spe.eds n14 n8 n5 n8 = 1
spe.egs n13 n8 n6 n8 = 1
spe.esg n6 n10 n6 n8 = 1
spe.evthres n6 n21 n19 n8 = 1
spe.evtemp n20 n6 n18 n22 = 1

i.it n8 n17 = 1
l.lgate n1 n9 = 5.61e−9
l.ldrain n2 n5 = 1.0e−9
l.lsource n3 n7 = 2.7e−9

res.rlgate n1 n9 = 56.1
res.rldrain n2 n5 = 10
res.rlsource n3 n7 = 27

m.mmed n16 n6 n8 n8 = model=mmedmod, l=1u, w=1u
m.mstrong n16 n6 n8 n8 = model=mstrongmod, l=1u, w=1u
m.mweak n16 n21 n8 n8 = model=mweakmod, l=1u, w=1u

res.rbreak n17 n18 = 1, tc1=1.0e−3,tc2=−1.7e−6
res.rdrain n50 n16 = 3.8e−3, tc1=8.5e−3,tc2=2.8e−5
res.rgate n9 n20 = 1.1
res.rslc1 n5 n51 = 1.0e−6, tc1=2.0e−3,tc2=2.0e−6
res.rslc2 n5 n50 = 1.0e3
res.rsource n8 n7 = 2.5e−3, tc1=4e−3,tc2=1e−6
res.rvthres n22 n8 = 1, tc1=−4.0e−3,tc2=−1.8e−5
res.rvtemp n18 n19 = 1, tc1=−4.4e−3,tc2=2.2e−6
sw_vcsp.s1a n6 n12 n13 n8 = model=s1amod
sw_vcsp.s1b n13 n12 n13 n8 = model=s1bmod
sw_vcsp.s2a n6 n15 n14 n13 = model=s2amod
sw_vcsp.s2b n13 n15 n14 n13 = model=s2bmod

v.vbat n22 n19 = dc=1
equations {
i (n51−>n50) +=iscl
```


Share Feedback
Your Opinion Matters

iscl: v(n51,n50) = ((v(n5,n51)/(1e−9+abs(v(n5,n51))))*((abs(v(n5,n51)*1e6/350))** 3))
}}

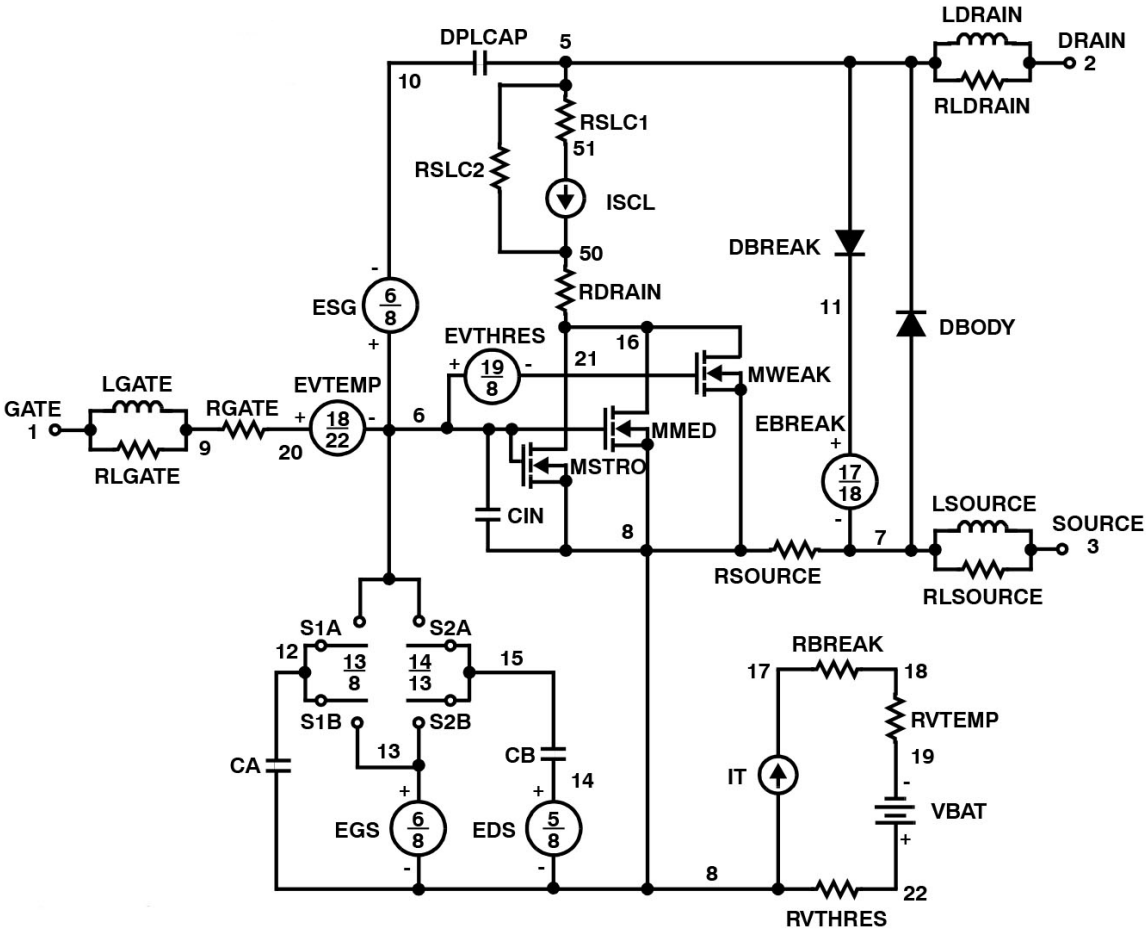

Figure 23. SABER Electrical Model

Share Feedback
Your Opinion Matters

SPICE Thermal Model

REV May 2002

FDB3632

CTHERM1 TH 6 7.5e−3
CTHERM2 6 5 8.0e−3
CTHERM3 5 4 9.0e−3
CTHERM4 4 3 2.4e−2
CTHERM5 3 2 3.4e−2
CTHERM6 2 TL 6.5e−2

RTHERM1 TH 6 3.1e−4
RTHERM2 6 5 2.5e−3
RTHERM3 5 4 2.2e−2
RTHERM4 4 3 8.1e−2
RTHERM5 3 2 1.35e−1
RTHERM6 2 TL 1.5e−1

SABER THERMAL MODEL

SABER thermal model FDB3632
template thermal_model th tl
thermal_c th, tl
{
ctherm.ctherm1 th 6 =7.5e−3
ctherm.ctherm2 6 5 =8.0e−3
ctherm.ctherm3 5 4 =9.0e−3
ctherm.ctherm4 4 3 =2.4e−2
ctherm.ctherm5 3 2 =3.4e−2
ctherm.ctherm6 2 tl =6.5e−2

rtherm.rtherm1 th 6 =3.1e−4
rtherm.rtherm2 6 5 =2.5e−3
rtherm.rtherm3 5 4 =2.2e−2
rtherm.rtherm4 4 3 =8.1e−2
rtherm.rtherm5 3 2 =1.35e−1
rtherm.rtherm6 2 tl =1.5e−1
}

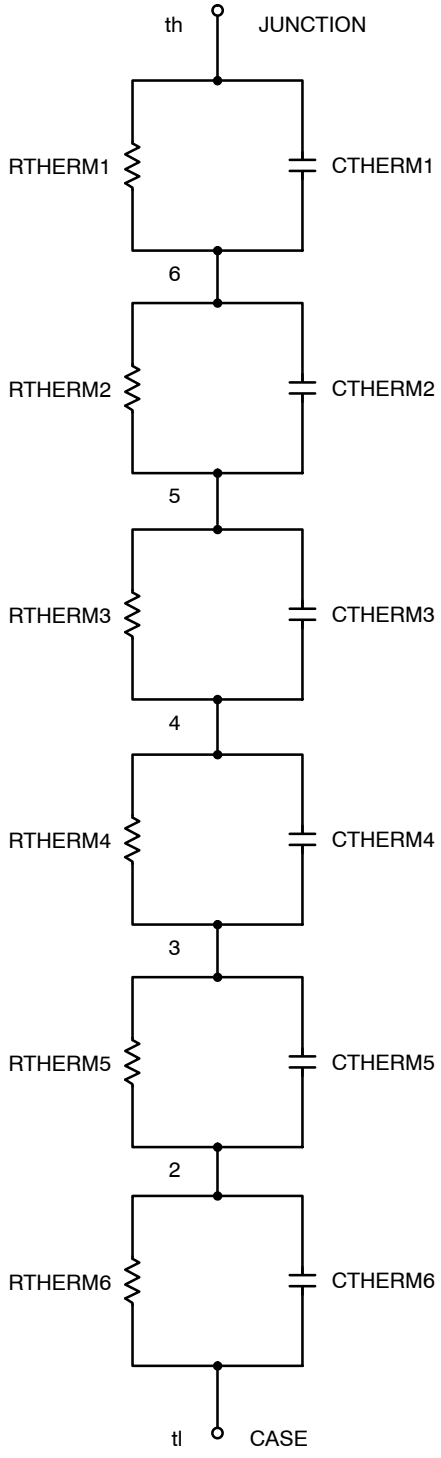

Figure 24. Thermal Model

POWERTRENCH is a registered trademark of Semiconductor Components Industries, LLC dba “**onsemi**” or its affiliates and/or subsidiaries in the United States and/or other countries.

Share Feedback
Your Opinion Matters

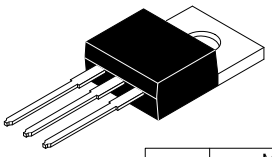

TO−220−3LD
CASE 340AT
ISSUE B

DATE 08 AUG 2022

DIM	MILLIMETERS		
	MIN.	NOM.	MAX.
A	4.00	--	4.70
A1	SEE NOTE "F"		
A2	2.10	--	2.85
b	0.55	--	1.00
b2	1.10	--	1.62
b4	1.42	--	1.62
c	0.36	--	0.60
D	13.90	--	16.30
D1	8.13	--	9.40
D2	11.50	--	14.30
D3	15.42	--	16.51
E	9.65	--	10.67
E1	7.59	--	8.65
e	2.40	--	2.67
H1	6.06	--	6.69
L	12.70	--	14.04
L1	2.70	--	4.10
P	3.50	--	4.00
Q	2.50	--	3.40
z	2.13 REF		
z1	2.06 REF		
Θ	3°	–	5°

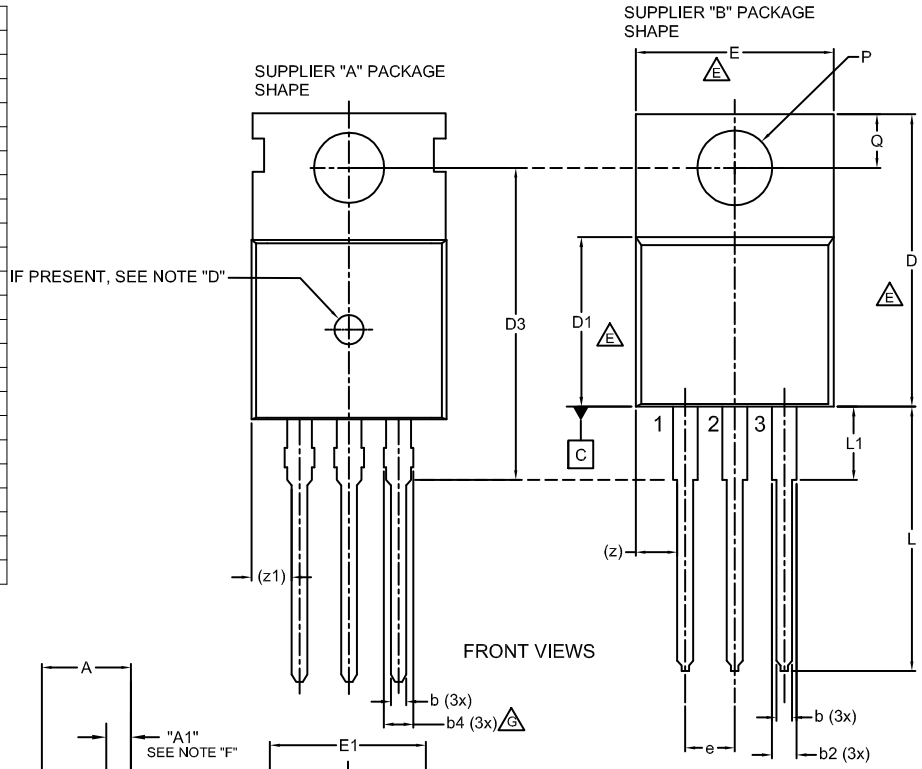

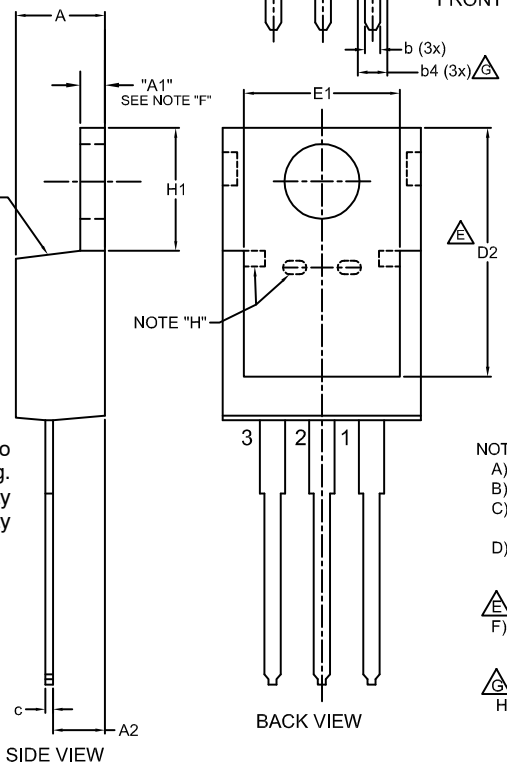

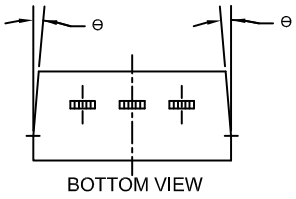

GENERIC MARKING DIAGRAM*



XXXX = Specific Device Code
A = Assembly Location
Y = Year
WW = Work Week
ZZ = Assembly Lot Code

*This information is generic. Please refer to device data sheet for actual part marking. Pb−Free indicator, “G” or microdot “▪”, may or may not be present. Some products may not follow the Generic Marking.

NOTES:
A) REFERENCE JEDEC, TO-220, VARIATION AB
B) ALL DIMENSIONS ARE IN MILLIMETERS.
C) DIMENSIONS COMMON TO ALL PACKAGE SUPPLIERS EXCEPT WHERE NOTED [ ].
D) LOCATION OF MOLDED FEATURE MAY VARY (LOWER LEFT CORNER, LOWER CENTER AND CENTER OF THE PACKAGE)
E) DOES NOT COMPLY JEDEC STANDARD VALUE.
F) "A1" DIMENSIONS AS BELOW:
SINGLE GAUGE = 0.51 - 0.61
DUAL GAUGE = 1.10 - 1.45
G) PRESENCE IS SUPPLIER DEPENDENT
H) SUPPLIER DEPENDENT MOLD LOCKING HOLES IN HEATSINK.

DOCUMENT NUMBER:	**98AON13818G**	Electronic versions are uncontrolled except when accessed directly from the Document Repository. Printed versions are uncontrolled except when stamped “CONTROLLED COPY” in red.
DESCRIPTION:	**TO−220−3LD**	**PAGE 1 OF 1**

onsemi and onsemi are trademarks of Semiconductor Components Industries, LLC dba **onsemi** or its subsidiaries in the United States and/or other countries. **onsemi** reserves the right to make changes without further notice to any products herein. **onsemi** makes no warranty, representation or guarantee regarding the suitability of its products for any particular purpose, nor does **onsemi** assume any liability arising out of the application or use of any product or circuit, and specifically disclaims any and all liability, including without limitation special, consequential or incidental damages. **onsemi** does not convey any license under its patent rights nor the rights of others.

© Semiconductor Components Industries, LLC, 2019

TO−247−3LD SHORT LEAD
CASE 340CK
ISSUE A

DATE 31 JAN 2019

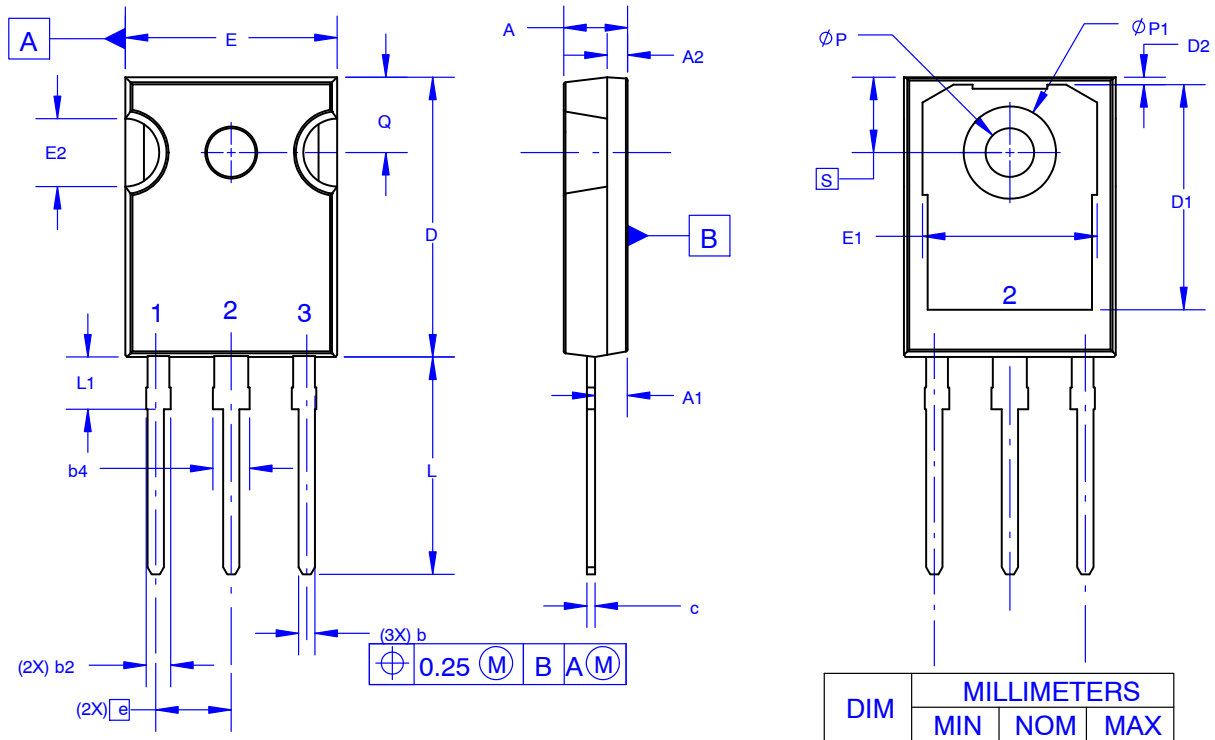

DIM	MILLIMETERS		
	MIN	NOM	MAX
A	4.58	4.70	4.82
A1	2.20	2.40	2.60
A2	1.40	1.50	1.60
b	1.17	1.26	1.35
b2	1.53	1.65	1.77
b4	2.42	2.54	2.66
c	0.51	0.61	0.71
D	20.32	20.57	20.82
D1	13.08	~	~
D2	0.51	0.93	1.35
E	15.37	15.62	15.87
E1	12.81	~	~
E2	4.96	5.08	5.20
e	~	5.56	~
L	15.75	16.00	16.25
L1	3.69	3.81	3.93
ØP	3.51	3.58	3.65
ØP1	6.60	6.80	7.00
Q	5.34	5.46	5.58
S	5.34	5.46	5.58

NOTES: UNLESS OTHERWISE SPECIFIED.

A. DIMENSIONS ARE EXCLUSIVE OF BURRS, MOLD FLASH, AND TIE BAR EXTRUSIONS.
B. ALL DIMENSIONS ARE IN MILLIMETERS.
C. DRAWING CONFORMS TO ASME Y14.5 - 2009.
D. DIMENSION A1 TO BE MEASURED IN THE REGION DEFINED BY L1.
E. LEAD FINISH IS UNCONTROLLED IN THE REGION DEFINED BY L1.

GENERIC MARKING DIAGRAM*

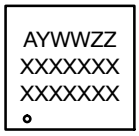

XXXX = Specific Device Code
A = Assembly Location
Y = Year
WW = Work Week
ZZ = Assembly Lot Code

*This information is generic. Please refer to device data sheet for actual part marking. Pb−Free indicator, “G” or microdot “▪”, may or may not be present. Some products may not follow the Generic Marking.

DOCUMENT NUMBER:	**98AON13851G**	Electronic versions are uncontrolled except when accessed directly from the Document Repository. Printed versions are uncontrolled except when stamped “CONTROLLED COPY” in red.
DESCRIPTION:	**TO−247−3LD SHORT LEAD**	**PAGE 1 OF 1**

onsemi and onsemi are trademarks of Semiconductor Components Industries, LLC dba **onsemi** or its subsidiaries in the United States and/or other countries. **onsemi** reserves the right to make changes without further notice to any products herein. **onsemi** makes no warranty, representation or guarantee regarding the suitability of its products for any particular purpose, nor does **onsemi** assume any liability arising out of the application or use of any product or circuit, and specifically disclaims any and all liability, including without limitation special, consequential or incidental damages. **onsemi** does not convey any license under its patent rights nor the rights of others.

© Semiconductor Components Industries, LLC, 2016

D²PAK–3 (TO–263, 3–LEAD)
CASE 418AJ
ISSUE F

DATE 11 MAR 2021

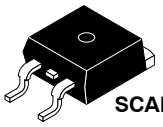

SCALE 1:1

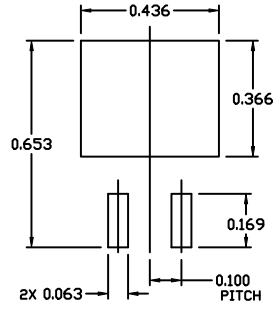

RECOMMENDED
MOUNTING FOOTPRINT

* For additional information on our Pb–Free strategy and soldering details, please download the ON Semiconductor Soldering and Mounting Techniques Reference Manual, SOLDERRM/D.

NOTES:

1. DIMENSIONING AND TOLERANCING PER ASME Y14.5M, 2009.
2. CONTROLLING DIMENSION: INCHES
3. CHAMFER OPTIONAL.
4. DIMENSIONS D AND E DO NOT INCLUDE MOLD FLASH. MOLD FLASH SHALL NOT EXCEED 0.005 PER SIDE. THESE DIMENSIONS ARE MEASURED AT THE OUTERMOST EXTREMES OF THE PLASTIC BODY AT DATUM H.
5. THERMAL PAD CONTOUR IS OPTIONAL WITHIN DIMENSIONS E, L1, D1, AND E1.
6. OPTIONAL MOLD FEATURE.
7. ①, ② … OPTIONAL CONSTRUCTION FEATURE CALL OUTS.

	INCHES		MILLIMETERS	
DIM	MIN.	MAX.	MIN.	MAX.
A	0.160	0.190	4.06	4.83
A1	0.000	0.010	0.00	0.25
b	0.020	0.039	0.51	0.99
c	0.012	0.029	0.30	0.74
c2	0.045	0.065	1.14	1.65
D	0.330	0.380	8.38	9.65
D1	0.260	---	6.60	---
E	0.380	0.420	9.65	10.67
E1	0.245	---	6.22	---
e	0.100 BSC		2.54 BSC	
H	0.575	0.625	14.60	15.88
L	0.070	0.110	1.78	2.79
L1	---	0.066	---	1.68
L2	---	0.070	---	1.78
L3	0.010 BSC		0.25 BSC	
M	0°	8°	0°	8°

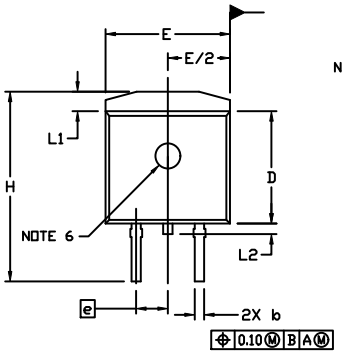

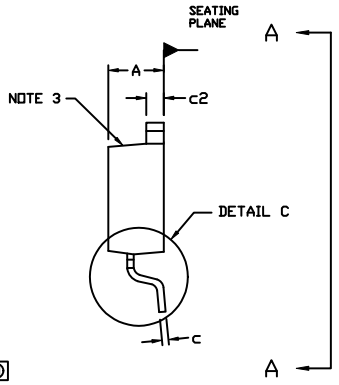

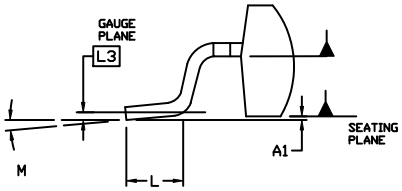

DETAIL C
TIP LEADFORM
ROTATED 90° CW

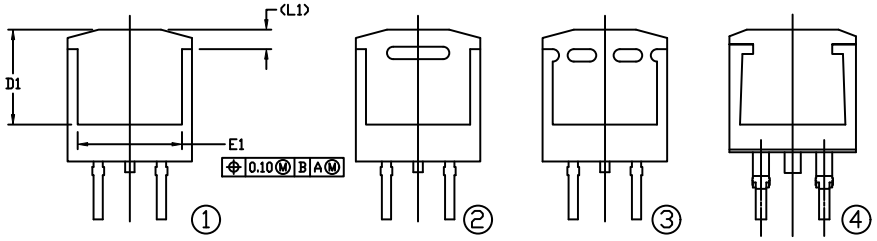

VIEW A–A

VIEW A–A
OPTIONAL CONSTRUCTIONS

GENERIC MARKING DIAGRAMS*

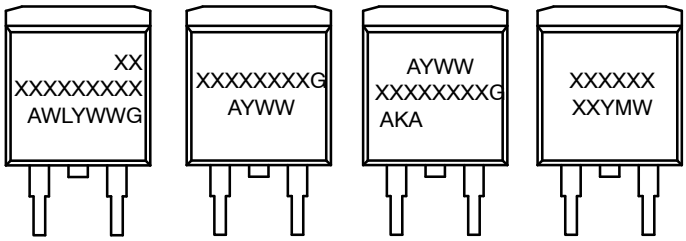

IC **Standard** **Rectifier** **SSG**

XXXXXX = Specific Device Code
A = Assembly Location
WL = Wafer Lot
Y = Year
WW = Work Week
W = Week Code (SSG)
M = Month Code (SSG)
G = Pb–Free Package
AKA = Polarity Indicator

*This information is generic. Please refer to device data sheet for actual part marking. Pb–Free indicator, “G” or microdot “ ▪”, may or may not be present. Some products may not follow the Generic Marking.

DOCUMENT NUMBER:	**98AON56370E**	Electronic versions are uncontrolled except when accessed directly from the Document Repository. Printed versions are uncontrolled except when stamped “CONTROLLED COPY” in red.
DESCRIPTION:	**D²PAK–3 (TO–263, 3–LEAD)**	**PAGE 1 OF 1**

onsemi and ONSEMI are trademarks of Semiconductor Components Industries, LLC dba **onsemi** or its subsidiaries in the United States and/or other countries. **onsemi** reserves the right to make changes without further notice to any products herein. **onsemi** makes no warranty, representation or guarantee regarding the suitability of its products for any particular purpose, nor does **onsemi** assume any liability arising out of the application or use of any product or circuit, and specifically disclaims any and all liability, including without limitation special, consequential or incidental damages. **onsemi** does not convey any license under its patent rights nor the rights of others.

© Semiconductor Components Industries, LLC, 2011

onsemi, , and other names, marks, and brands are registered and/or common law trademarks of Semiconductor Components Industries, LLC dba "**onsemi**" or its affiliates and/or subsidiaries in the United States and/or other countries. **onsemi** owns the rights to a number of patents, trademarks, copyrights, trade secrets, and other intellectual property. A listing of **onsemi**'s product/patent coverage may be accessed at www.onsemi.com/site/pdf/Patent−Marking.pdf. **onsemi** reserves the right to make changes at any time to any products or information herein, without notice. The information herein is provided "as−is" and **onsemi** makes no warranty, representation or guarantee regarding the accuracy of the information, product features, availability, functionality, or suitability of its products for any particular purpose, nor does **onsemi** assume any liability arising out of the application or use of any product or circuit, and specifically disclaims any and all liability, including without limitation special, consequential or incidental damages. Buyer is responsible for its products and applications using **onsemi** products, including compliance with all laws, regulations and safety requirements or standards, regardless of any support or applications information provided by **onsemi**. "Typical" parameters which may be provided in **onsemi** data sheets and/or specifications can and do vary in different applications and actual performance may vary over time. All operating parameters, including "Typicals" must be validated for each customer application by customer's technical experts. **onsemi** does not convey any license under any of its intellectual property rights nor the rights of others. **onsemi** products are not designed, intended, or authorized for use as a critical component in life support systems or any FDA Class 3 medical devices or medical devices with a same or similar classification in a foreign jurisdiction or any devices intended for implantation in the human body. Should Buyer purchase or use **onsemi** products for any such unintended or unauthorized application, Buyer shall indemnify and hold **onsemi** and its officers, employees, subsidiaries, affiliates, and distributors harmless against all claims, costs, damages, and expenses, and reasonable attorney fees arising out of, directly or indirectly, any claim of personal injury or death associated with such unintended or unauthorized use, even if such claim alleges that **onsemi** was negligent regarding the design or manufacture of the part. **onsemi** is an Equal Opportunity/Affirmative Action Employer. This literature is subject to all applicable copyright laws and is not for resale in any manner.

ADDITIONAL INFORMATION

TECHNICAL PUBLICATIONS:
Technical Library: www.onsemi.com/design/resources/technical−documentation
onsemi Website: www.onsemi.com

ONLINE SUPPORT: www.onsemi.com/support
For additional information, please contact your local Sales Representative at www.onsemi.com/support/sales

ENTEGRECİ

Bu belge www.entegreci.com üzerinden sunulmaktadır.

Elektronik komponent tedarikinde Entegreci

Entegreci, Eskişehir merkezli, Türkiye geneline satış yapan bir elektronik komponent mağazasıdır. Entegreler (IC), mikrodenetleyiciler, transistörler, diyotlar, pasif elemanlar, konnektörler, modüller ve geliştirme kartları tek adetten seri üretim adetlerine kadar satılır. Ürün sayfalarında güncel stok durumunu, fiyatı ve datasheet bağlantısını bulabilirsiniz.

Parça koduyla arama

Üretici parça numarasını yazın; stok ve fiyatı hemen görün.

www.entegreci.com

Ürün kategorileri

Entegreden kapasitöre tüm elektronik komponent kategorileri.

Kategorilere göz atın

Üreticiler

Aradığınız üreticinin ürünlerini tek sayfada inceleyin.

Üreticileri görün

Toplu alım ve teklif

Listede olmayan ya da yüksek adetli parçalar için teklif isteyin.

Teklif isteyin

www.entegreci.com | **destek@entegreci.com** | **0850 305 90 34**

Entegreci is an online electronic components store based in Türkiye. Search by manufacturer part number to see stock, prices and datasheets for integrated circuits, microcontrollers, transistors, passive components and connectors, or request a quote for parts that are not listed.

Bu sayfa Entegreci tarafından eklenmiştir. Belgenin önceki sayfaları asıl yayıncısına aittir ve içeriği değiştirilmemiştir; en güncel sürüm için belgenin yayıncısına başvurun.